Registered No. C207

No. 27 of 1936

BENG. LEGISLATIVE LIBRARY 14.9.36

The Calcutta Gazette

Published by Authority

THURSDAY, JULY 2, 1936.

CONTENTS:

	Page.
Part I.—Orders and Notifications by the Governor of Bengal, the Government of Bengal, the High Court, Government Treasury, etc.	1543—1667
Part IA.—Orders and Notifications by the Government of India republished for general information	175—181
Part IB.—Educational Notices ..	1103—1111
Part II.—Advertisements ..	639—654
Part III.—Acts of the Bengal Legislative Council	*Nil*
Part IV.—Bills introduced in the Bengal Legislative Council, Reports of Select Committees presented or to be presented to that Council, and Bills published before introduction in that Council ..	*Nil*
Part V.—Acts of the Indian Legislature assented to by the Governor-General and Ordinances promulgated under section 72 of the Government of India Act ..	*Nil*
Part VI.—Bills introduced in the Council of State and Legislative Assembly, Reports of Select Committees presented to the Council and Assembly and Bills published under rule 18 of the Indian Legislative Rules	*Nil*
Supplement No. 27 :—	
Statement showing gifts made by private individuals in the districts of the Chittagong Division during the year 1935-36	903
Daily Rainfall—Weekly Gauge Readings—Weekly Vital Statistics—Weekly Weather and Crop Report—Prices-current—Cotton Ginning and Pressing—Finance Statements of Provincial and Central Co-operative Banks—Corporation of Calcutta Notice—Calcutta Improvement Trust Notice ..	904—956

PART I

Orders and Notifications by the Governor of Bengal, the Government of Bengal, the High Court, Government Treasury, etc.

Orders by the Government of Bengal.

No. 5291A.

Appointments and Transfers.

GENERAL.

Darjeeling-Bakarganj.—No. 1164A.D.—19th June 1936.—Babu Sisir Kumar Gupta, Deputy Magistrate and Deputy Collector, Darjeeling, is appointed to have charge of the Pirojpur subdivision of the Bakarganj district.

Rangpur-Hooghly.—No. 1168A.D.—19th June 1936.—Babu Mati Chand Pradhan, Deputy Magistrate and Deputy Collector, on probation, Rangpur, is transferred to the headquarters station of the Hooghly district.

Hooghly-Howrah.—No. 1172A.D.—19th June 1936.—Babu Kumud Bihari Mallik, Deputy Magistrate and Deputy Collector, Hooghly, is transferred to the headquarters station of the Howrah district.

Burdwan-Mymensingh.—No. 1191A.D.—20th June 1936.—Mr. E. R. Kitchin, I.C.S., Assistant Magistrate and Collector, Burdwan, is appointed to have charge of the Jamalpur subdivision of the Mymensingh district.

Rajshahi-Faridpur. No. 1196A.D. 20th June 1936.—Mr. W. H. Saumarez Smith, I.C.S., Assistant Magistrate and Collector, Rajshahi, is appointed to have charge of the Madaripur subdivision of the Faridpur district.

Faridpur-Bakarganj.—No. 1201A.D.—20th June 1936. Mr. S. K. Dey, I.C.S., Joint Magistrate and Deputy Collector, Madaripur, Faridpur, is transferred to the headquarters station of the Bakarganj district.

Jessore.—No. 1215A.D.—20th June 1936.—Mr. B. K. Basu, I.C.S., on leave, is appointed to be District and Sessions Judge, Jessore.

Mymensingh-Nadia. No. 1225A.D.—20th June 1936.—Mr. S. K. Chatterjee, I.C.S., officiating Additional District and Sessions Judge, Mymensingh, is appointed to act, until further orders, as District and Sessions Judge, Nadia.

24-Parganas-Mymensingh.—No. 1226A.D.—20th June 1936.—Rai Sahib Pranendra Narayan Chaudhuri, Subordinate Judge and Assistant Sessions Judge, 24-Parganas, is appointed to act, until further orders, as an Additional District and Sessions Judge, Mymensingh.

Howrah-Dacca. No. 1231A.D.—20th June 1936.—Babu Phanindra Nath Mitra, officiating Additional District and Sessions Judge, Howrah, is appointed to act, until further orders, as an Additional District and Sessions Judge, Dacca.

Mymensingh. — No. 1277A.D. — 24th June 1936.—Babu Subodh Chandra Datta, Subordinate Judge and Assistant Sessions Judge, Mymensingh, is appointed to act, until further orders, as an Additional District and Sessions Judge of that district.

Burdwan-Howrah.—No. 1281A.D. — 24th June 1936.—Babu Abani Prasad Neogi, Subordinate Judge and Assistant Sessions Judge, Burdwan, is appointed to act temporarily as an Additional District and Sessions Judge, Howrah.

Dinajpur-Bakarganj. —No. 1287A.D.—24th June 1936.—Babu Santosh Sil Banarji, Subordinate Judge and Assistant Sessions Judge, Dinajpur, is appointed to act, until further orders, as an Additional District and Sessions Judge, Bakarganj.

POLICE.

Calcutta. — No. 1270A.D. — 23rd June 1936.—Babu Lalit Mohan Banarji, an Inspector of the Calcutta Police, is appointed to act, until further orders, as an Assistant Commissioner of Police, Calcutta.

Calcutta.—No. 1273A.D. — 23rd June 1936.—Maulvi Khondkar Hossain Reza, an Inspector of the Calcutta Police, is appointed to act as an Assistant Commissioner of Police, Calcutta, during the absence, on leave, of Rai Madan Mohan Chakrabatti Bahadur, or until further orders.

Leave.

GENERAL.

Presidency Division. — No. 1141A.D. — 19th June 1936.—Khan Sahib Adil-uz-Zaman Khan, Deputy Magistrate and Deputy Collector, employed as a Personal Assistant to the Commissioner of the Presidency Division, is allowed leave on average pay for four months, under rule 81 (*b*) (*ii*) of the Fundamental Rules, with effect from the date on which he may be relieved.

Murshidabad. — No. 1159A.D. — 19th June 1936. — Babu Jaladhar Ghosh, Sub-Deputy Collector, Murshidabad, is allowed leave on average pay, under rule 81 (*b*) (*ii*) of the Fundamental Rules, from the 1st July 1936 to the 27th October 1936, inclusive.

Nadia. — No. 1178A.D. — 19th June 1936.—Mr. A. M. Ahmad, District and Sessions Judge, Nadia, is allowed leave on average pay for three months and one day, under the proviso to rule 81 (*b*) (*ii*) of the Fundamental Rules, with effect from the 13th July 1936, or any subsequent date on which he may be relieved.

POLICE.

Dacca. — No. 1152A.D. — 19th June 1936.—Lieutenant P. H. B. Hickman, I.A., Assistant Commandant, Eastern Frontier Rifles, Bengal Battalion, Dacca, is allowed leave on average pay, under rule 100 (*a*) (*i*) of the Fundamental Rules, from the 17th July to the 11th November 1936, inclusive.

H. J. TWYNAM,

Chief Secy. to the Govt. of Bengal (offg.).

POLITICAL DEPARTMENT.

Political.

NOTIFICATIONS.

No. 10594P.—26th June 1936.—In exercise of the power conferred by sub-section (*4*) of section 15 of the Cantonments Act, 1924 (II of 1924), the Governor in Council is pleased to direct that Captain W. F. Dundas, 1st Battalion, The Black Watch (R. H. R.), ceases to be a nominated member of the Barrackpore Cantonment Board, with effect from the 15th May 1936, by reason of his becoming an *ex-officio* member thereof on his appointment as the Officer Commanding the said Cantonment, and is further pleased, in pursuance of the provision of sub-section (*2*) of section 14 of the said Act, to notify the vacancy in the said nominated membership.

No. 10599P.—26th June 1936.—In pursuance of the provision of sub-section (*2*) of section 14 of the Cantonments Act, 1924 (II of 1924), the Governor in Council is pleased to notify the nomination of Captain J. F. S. McLaren, 1st Battalion, The Black Watch (R. H. R.), as a member of the Barrackpore Cantonment Board to fill up the vacancy that has occurred in the Board on Captain W. F. Dundas, 1st Battalion, The Black Watch (R. H. R.), becoming an *ex-officio* member thereof on his appointment as the Officer Commanding the said Cantonment.

H. J. TWYNAM,

Chief Secy. to the Govt. of Bengal (offg.).

Jails.

NOTIFICATIONS.

Howrah. — No. 2020P.J. — 27th June 1936. — Babu Digendra Bhusan Ghose, Jailor of the Howrah Jail, was appointed to act as Superintendent of that Jail in addition to his own duties from the 13th May 1936 to the 8th June 1936.

Howrah. — No. 2023P.J. — 27th June 1936.— Babu Jyotish Chandra Banerji, Jailor of the Howrah Jail, is appointed to act, until further orders, as Superintendent of that Jail in addition to his own duties, with effect from the 10th June 1936.

J. R. BLAIR,

Addl. Secy. to the Govt. of Bengal.

POLICE DEPARTMENT.

NOTIFICATION.

Jalpaiguri.—No. 2689Pl.—29th June 1936.— In pursuance of the provisions of rule 76 of the Bengal Motor Vehicles Rules, 1935, the Governor in Council is pleased to declare the following route to be a route in which the plying for hire by omnibuses and motor cabs shall be prohibited in view of the existence of alternative facilities for the conveyance of passengers, namely :—

Chalsa to Bagrakot in the district of Jalpaiguri.

H. J. TWYNAM,

Chief Secy. to the Govt. of Bengal (offg.).

JUDICIAL DEPARTMENT.

No. 5292A.

Powers.

Rajshahi.—No. 1161A.D.—19th June 1936.— In exercise of the powers conferred by sub-section (*1*) of section 164 of the Code of Criminal Procedure, 1898 (Act V of 1898), the Governor in Council is pleased to empower Babu Jatindra Kumar Biswas, a Sub-Deputy Magistrate, also a Magistrate of the second class at Nator, in the district of Rajshahi, to record any statement or confession made to him in the course of an investigation under Chapter XIV of the said Code or any time afterwards before the commencement of enquiry or trial.

H. J. TWYNAM,

Chief Secy. to the Govt. of Bengal (offg.).

Appointments and Transfers.

24-Parganas.—No. 4822J.—20th June 1936.— In exercise of the powers conferred by sections 14 and 15 of the Code of Criminal Procedure, 1898 (Act V of 1898), the Governor in Council is pleased—

(*a*) to confer upon Mr. J. A. Robb the powers of a Magistrate of the third class, in the district of the 24-Parganas, for a period of three years from the date of this notification, and

(*b*) to direct him to sit as a member of the Budge Budge bench in the said district.

Birbhum.—No. 4847J.—22nd June 1936.—In exercise of the powers conferred by sections 14 and 15 and the proviso to section 357 of the Code of Criminal Procedure, 1898 (Act V of 1898), the Governor in Council is pleased—

(*a*) to confer upon Maulvi Abdul Kader the powers of a Magistrate of the third class, in the district of Birbhum, for a period of three years from the 24th July 1936, in respect to such cases as may be made over to him within the limits of the Rampurhat subdivision of the said district,

(*b*) to direct that he shall, in addition to sitting singly, sit as a member of the Rampurhat bench in the said district, and

(*c*) to direct him to take down evidence in the English language.

Hooghly.—No. 4849J.—22nd June 1936.—In exercise of the powers conferred by sections 14 and 15 and the proviso to section 357 of the Code of Criminal Procedure, 1898 (Act V of 1898), the Governor in Council is pleased—

(*a*) to confer upon Mr. Thomas George Morrow the powers of a Magistrate of the third class, in the district of Hooghly, for a period of three years from the date of this notification,

(*b*) to direct him to sit as a member of the Champdany bench in the said district, and

(*c*) to direct him to take down evidence in the English language.

24-Parganas.—No. 4851J.—22nd June 1936.—In exercise of the powers conferred by sections 14 and 15 and the proviso to section 357 of the Code of Criminal Procedure, 1898 (Act V of 1898), the Governor in Council is pleased—

(*a*) to confer upon Mr. Daniel A. Chaudhuri the powers of a Magistrate of the third class, in the district of the 24-Parganas, for a period of three years from the date of this notification,

(*b*) to direct him to sit as a member of the Budge Budge bench in the said district, and

(*c*) to direct him to take down evidence in the English language.

Hooghly.—No. 4956J.—25th June 1936.—In exercise of the powers conferred by sections 14 and 15 and the proviso to section 357 of the Code of Criminal Procedure, 1898 (Act V of 1898), the Governor in Council is pleased—

(*a*) to confer upon Babu Bibhuti Bhusan Chatarji the powers of a Magistrate of the third class, in the district of Hooghly, for a period of three years from the 26th July 1936,

(*b*) to direct him to sit as a member of the Champdany bench in the said district, and

(*c*) to direct him to take down evidence in the English language.

NOTIFICATIONS.

Calcutta.—No. 4843J.—22nd June 1936.—Under section 24 of the Parsi Marriage and Divorce Act, 1936, the Government of Bengal propose to select not more than thirty out of the persons named below who will be appointed as delegates to aid in the adjudication of cases in the Parsi Chief Matrimonial Court to be constituted shortly in Calcutta. Any objection or suggestions in the matter should be communicated to the undersigned by the 15th July 1936 :—

Mr. C. H. M. Rustomji.
Mr. Pestonji Kawasji Arjani.
Mr. Jehanjirji Jiwanji Modi.
Mr. Edulji Shapurji Olpadwalla.
Mr. D. Pestonji.
Mr. Fram C. H. M. Rustomji.
Mr. Shapurji Sorabji Nazir.
Dr. Nariman H. Oonwalla.
Mr. Darabshah Curshedji Driver.
Mr. Mohtabhoy C. Guzdar.
Mr. Manockji D. Darbari.
Dr. Jamshed D. Guzdar.
Mr. Jamshedji B. Dastur.
Mr. Nariman R. Master.
Mr. Kaikhosru Edulji Wadia.
Dr. Faredoon N. Desai
Mr. Shapurji S. Guzdar.
Mr. Jamshedji Dinshaw Bamjee.
Dr. Behram K. Wadia.
Mr. Gustasp T. Dastur.
Dr. Rustomji J. Guzdar.
Mr. Munchershah M. Battiwalla.
Mr. K. S. Collah.
Mr. N. A. Confectioner.
Mr. Fram J. F. Madan.
Mr. Burjorji Jamshedji Dastur.
Mr. A. R. Dalal.
Mr. Dinshaw R. Billimoria.
Mr. N. R. Mehta.
Mr. Dady N. Nanavatty.
Mr. Nadir D. Gandhy.
Mr. A. Dinshaw.
Mr. Merwnji Cowasji Gora.
Mr. Edulji Rustomji Mistry.
Mr. Victor Cowasji Viccaji.
Mr. Jehanjirji Cowasji Godiwalla.
Mr. Curshedji Bomanji Parekh.
Mr. Rustom Pehmurash Saklat.

Dinajpur.—No. 4961J. 26th June 1936.—In exercise of the power conferred by section 65 of the Bengal Village Self-Government Act, 1919 (Bengal Act V of 1919), the Governor in Council is pleased to appoint the following members of the union boards mentioned below, to be, during their term of office as such members, union benches within the jurisdiction of the union boards of which they are, respectively, members, for the purposes of that section :—

Dinajpur district.

Balurghat subdivision.

Balurghat police-station.

Boaldar union board.

Babu Brojo Behari Roy Chaudhuri.
Babu Rai Chandra Sarkar.
Babu Jatindra Nath Samajdar.
Munshi Mati Muhammad Mandal.

Balurghat union board.

Babu Sishu Ranjan Das Gupta.
Babu Madhu Sudhan Kar.
Babu Joynarayan Agarwala.
Maulvi Alimuddin Mandal.
Babu Manindra Nath Das.

Binchira union board.

Babu Baidya Nath Laha.
Babu Tincowri Saha.
Mr. Cornwallis Marma.
Maulvi Muhammad Asrafuddin Sardar.

Phulbari police-station.

Birampur union board.

Rai Sahib Jagadiswar Saha.
Babu Jatindra Nath Mani.
Babu Debendra Nath Chaudhuri.
Munshi Muhammad Saheruddin Mandal.
Munshi Samaruddin Mandal.

Sujapur union board.

Babu Purna Chandra Chaudhuri.
Babu Kshitish Chandra Ray.
Babu Debendra Nath Sarkar.
Maulvi Sayed Abdur Rashid.

Daulatpur union board.

Babu Narayan Kumar Chaudhuri.
Babu Sashi Kanta De.
Munshi Sarafuddin Mandal.
Munshi Serajuddin Sarkar.

Patnitola police-station.

Patnitola union board.

Babu Mohit Nath Chaudhuri.
Babu Beni Madhab Ray.
Munshi Ismail Khan.
Munshi Basiruddin Mandal.

Tapan police-station.

Hajaratpur union board.

Babu Radha Kissen Therani.
Babu Lakshan Chandra Das.
Munshi Khosh Muhammad Sarkar.
Babu Hiralal Sarkar.

Porsha police-station.

Ganguria union board.

Munshi Aftabuddin Ahmed Mia.
Munshi Hamidulla Shah.
Babu Kailash Chandra Mandal.
Munshi Chantulla Mandal.

2. This notification will take effect from the date of the first meeting of the reconstituted union boards at which a quorum is present.

Dinajpur.—4962J.—26th June 1936.—In exercise of the power conferred by section 73 of the Bengal Village Self-Government Act, 1919 (Bengal Act V of 1919), the Governor in Council is pleased to appoint the following members of the union boards mentioned below, to be, during their term of office as such members, union courts within the jurisdiction of the union boards of which they are, respectively, members, for the purposes of that section :—

Dinajpur district.

Balurghat subdivision.

Balurghat police-station.

Boaldar union board.

Babu Brojo Behari Roy Chaudhuri.
Babu Rai Chandra Sarkar.
Babu Jatindra Nath Samajdar.
Munshi Mati Muhammad Mandal.

Balurghat union board.

Babu Sishu Ranjan Das Gupta.
Babu Madhu Sudhan Kar.
Babu Joy Narayan Agarwala.
Maulvi Alimuddin Mandal.
Babu Manindra Nath Das.

Phulbari police-station.

Birampur union board.

Rai Sahib Jagadiswar Saha.
Babu Jatindra Nath Mani.
Babu Debendra Nath Chaudhuri.
Munshi Muhammad Saheruddin Mandal.
Munshi Samaruddin Mandal.

Patnitola police-station.

Patnitola union board.

Babu Mohit Nath Chaudhuri.
Babu Beni Madhab Ray.
Munshi Ismail Khan.
Munshi Basiruddin Mandal.

2. This notification will take effect from the date of the first meeting of the reconstituted union boards at which a quorum is present.

Dacca.—No. 4964J.—26th June 1936.—In exercise of the power conferred by section 65 of the Bengal Village Self-Government Act, 1919 (Bengal Act V of 1919), the Governor in Council is pleased to appoint Babu Shyam Lal Saha, a member of the Baliati union board within the Saturia police-station in the Manikganj subdivision of the Dacca district, to be, during his term of office as such member, a member of the union bench within the jurisdiction of the said union board for the purposes of that section, *vice* Babu Amulya Chandra Ray Chaudhuri, resigned.

Dacca.—No. 4965J.—26th June 1936.—In exercise of the power conferred by section 73 of the Bengal Village Self-Government Act, 1919 (Bengal Act V of 1919), the Governor in Council is pleased to appoint Babu Shyam Lal Saha, a member of the Baliati union board within the Saturia police-station in the Manikganj subdivision of the Dacca district, to be, during his term of office as such member, a member of the union court within the jurisdiction of the said union board for the purposes of that section, *vice* Babu Amulya Chandra Ray Chaudhuri, resigned.

T. ROXBURGH,
Secy. to the Govt. of Bengal (offg.).

LOCAL SELF-GOVERNMENT DEPARTMENT.

NOTIFICATIONS.

Minister-in-charge: The Hon'ble Sir Bijoy Prasad Singh Roy, Kt.

24-Parganas. No. 5018M.—17th June 1936.—In exercise of the power conferred by section 506 of the Bengal Municipal Act, 1932 (Bengal Act XV of 1932), the Government of Bengal (Ministry of Local Self-Government) are pleased to confirm the by-laws framed by the Commissioners of the Baruipur Municipality, in the district of the 24-Parganas, under section 417 of the said Act, and published for information under notification No. 654M., dated the 31st January 1936.

Noakhali.—No. 5059L.S.-G.—19th June 1936.—It is hereby notified that, under section 7 of the Bengal Local Self-Government Act, 1885 (Bengal Act III of 1885), the following gentlemen have been elected to be members of the Noakhali district board :—

Elected by Sadar local board.

Maulvi Rezzakul Haider Choudhuri.

Alhadj Mahammod Ghazi Choudhuri (Khan Bahadur).

Maulvi Syed Gholam Ahmed Choudhuri.

Maulvi Rashid Ahmed.

Maulvi Mobarak Ali Howladar.

Maulvi Abdur Rashid Howladar.

Maulvi Arafer Rahaman Master.

Maulvi Abdus Soban Muktear.

Maulvi Mahammod Ibrahim, B L.

Babu Rajani Kanta Bhoumik.

Rai Hem Chandra Rai Choudhuri Bahadur, M.L.C.

Babu Ramani Mohan Gupta.

Elected by Feni local board.

Maulvi A. K. M. Abdus Salam Choudhury.

Maulvi Nural Islam Chaudhury *alias* Latu Mian.

Maulvi Serajul Islam, B L.

Babu Satish Chandra Dutta.

2. Under section 7 of the Act, the Government of Bengal (Ministry of Local Self-Government) are pleased to appoint the following gentlemen to be members of the above district board :—

The Civil Surgeon, Noakhali.

The Sadar Subdivisional Officer, Noakhali.

The Subdivisional Officer of Feni.

The Khas Mahal Officer, Noakhali.

Khan Bahadur Maulvi Abdul Gofran, B.L.

Rai Sahib Nagendra Kumar Sur, B.L.

Babu Kamala Kanta Majumdar.

Khan Sahib Maulvi Ahmad Azam Chaudhuri.

Jalpaiguri.—No. 5062M.—20th June 1936.—The following draft of a by-law, which has been framed by the Commissioners of the Jalpaiguri Municipality, in the district of Jalpaiguri, under section 245 of the Bengal Municipal Act, 1932 (Bengal Act XV of 1932), and which the Government of Bengal (Ministry of Local Self-Government) propose to confirm under section 506 of the Act, is published for the information of persons likely to be affected thereby.

2. The draft will be taken into consideration on the 23rd December 1936, and any objection or suggestion received by the undersigned through the District Magistrate and the Divisional Commissioner before that date will be duly considered :—

Draft by-laws.

No person shall drive any bullock cart or buffalo cart on any public street unless the iron tyres of the wheels or, in the case of carts not having iron tyres, the wooden rims of the wheels are 2½ inches or more in width, or shall carry in any such cart a load exceeding that shown in the following scales :—

For cart with 2½ inches wide tyres in wheels, 20 maunds.

For cart with 3 inches wide tyres in wheels, 25 maunds.

Any person committing a breach of this by-law shall be punishable with fine which may extend to five rupees and for every subsequent breach thereof with fine not exceeding ten rupees.

Jessore.—No. 5064M.—20th June 1936.—In exercise of the power conferred by section 506 of the Bengal Municipal Act, 1932 (Bengal Act XV of 1932), the Government of Bengal (Ministry of Local Self-Government) are pleased to confirm the by-laws framed by the Commissioners of the Jessore Municipality in the district of Jessore under section 417 of the said Act and published for information under notification No. 567M., dated the 27th January 1936.

Pabna. — No. 5090M. — 20th June 1936.—In exercise of the power conferred by section 58(2) of the Bengal Municipal Act, 1932 (Bengal Act XV of 1932), the Government of Bengal (Ministry of Local Self-Government) are pleased to appoint Mr. H. Macaulay to be a Commissioner of the Serajgunj Municipality in the district of Pabna, *vice* Babu Haripada Mazumdar, resigned.

24-Parganas.—No. 5153M.—26th June 1936.—In exercise of the power conferred by section 506 of the Bengal Municipal Act, 1932 (Bengal Act XV of 1932), the Government of Bengal (Ministry of Local Self-Government) are pleased to confirm the by-laws framed by the Commissioners of the Gobardanga Municipality, in the district of the 24-Parganas, under section 245(*a*) and (*b*) of the said Act, and published for information under notification No. 1399M., dated the 2nd March 1936.

24-Parganas.—No. 5092M.—22nd June 1936.—The following draft of by-laws, which has been framed by the Commissioners of the Tollygunj Municipality, in the district of 24-Parganas, under section 245(*a*) and (*b*) of the Bengal Municipal Act, 1932 (Bengal Act XV of 1932), and which the Government of Bengal (Ministry of Local Self-Government) propose to confirm under section 506 of the Act, is published for the information of persons likely to be affected thereby.

2. The draft will be taken into consideration on the 10th August 1936, and any objection or suggestion received by the undersigned through the District Magistrate and the Divisional Commissioner before that date will be duly considered :—

Draft by-laws.

By-laws regarding prohibition and regulation of traffic under section 245 (a) and (b) of the Bengal Municipal Act, 1932.

Definition.

1. In these by-laws "cattle" means cattle as defined in section 3 of the Cattle Trespass Act, 1871 (I of 1871).

Penalties.

2. *Fines.*—The penalty for the infringement of any of these by-laws shall be—

(*a*) a fine not exceeding the sum stated at the foot of the by-law,

(*b*) in the case of a second or subsequent conviction for a similar offence a fine not exceeding the sum (if any) stated in that behalf at the foot of the by-law, and

(*c*) in the case of a continuing offence, a further fine, not exceeding the sum (if any) stated at the foot of the by-law as the daily fine, which daily fine may be imposed for each day after written notice of the offence from the Commissioners.

Regulation of traffic on public streets.

3. *Youthful drivers.*—No owner of any carriage or cart shall allow it to be driven on any public street by a driver under fourteen years of age.

Fine, Rs. 10.

4. *Driving more than one carriage or cart.*—No driver shall drive or have in his charge on any public street more than one carriage or cart, except in the case of two carts, the hinder one of which is severely fastened to the preceding cart.

Fine, Rs. 10.

5. *Standing vehicles.*—No person shall keep standing on any public street any vehicle, in such a manner as to cause inconvenience to the public, for any time longer than may reasonably be required for loading or unloading or for taking up or setting down passengers.

Fine, Rs. 10; on a second or subsequent conviction, Rs. 50.

6. *Charge of carriage or cart.*—No person shall leave any carriage or cart on any public street without a person in charge thereof.

Fine, Rs. 10; on a second or subsequent conviction, Rs. 50.

7. *Rule of the road.*—Any person driving a carriage or cart, or riding a bicycle, or driving or riding an animal, or carrying a palanquin, on any public street, shall keep to his left when he passes a vehicle coming from the opposite direction or when any vehicle overtakes him, and shall keep to his right when overtaking any vehicle.

Fine, Rs. 10.

8. *Lights.*—No person shall drive any of the undermentioned vehicles or animals, or convey any palanquin, on any public street, between half-an-hour after sunset and half-an-hour before sunrise, unless lights are provided as follows :—

(*a*) every carriage must carry two conspicuous lights, one on each side ;

(*b*) every cart must carry one conspicuous light ;

(*c*) every elephant, camel or palanquin must be accompanied by one conspicuous light ;

(*d*) every cycle must carry one conspicuous light in front.

Provided that this by-law shall not apply on nights of full-moon or on the four nights before and after full-moon, if and when the moon is clearly visible.

Fine, Rs. 50.

9. *Signals on motors and cycles.*—No person shall drive any motorcar, or ride any motor-cycle or any tricycle or bicycle, on any public street unless it has attached to it a bell, horn or other suitable signal in good order.

Fine, Rs. 50.

10. *Maximum load for carts.*—No cart shall, without the general or special permission of the Commissioners, carry on any public street a load in excess of twenty maunds.

Fine, Rs. 10.

11. *Vehicles laden with girders, etc.*—No person shall drive upon a public street any vehicle laden with iron girders, rails, beams, bullas, bamboos, planks or other materials of a similar character which exceed twelve feet in length, unless the vehicle be accompanied by another person and be loaded in such a way that no portion of the said materials touches the ground.

Fine, Rs. 10.

12. *Vehicles laden with bricks, stones, etc.*—No person shall drive upon a public street any vehicle laden with bricks, stones or other materials of a similar character, unless such materials be so secured that they cannot fall on to the street.

Fine, Rs. 10.

13. *Animal laden with bamboos or timber.*—No person shall convey on any public street bamboos or timber placed on the back of any animal in such a way that any portion of such bamboos or timber touches the ground.

Fine, Rs. 10.

14. *Taking elephants or camels along a public street.* No person shall, without the general or special permission of the Commissioners, take any elephant or camel along any public street.

Fine, Rs. 50.

15. *Taking an elephant over a bridge.*—No person shall allow any elephant in his charge to go over any bridge on any public street unless the bridge be constructed of arched masonry, steel or ferro-concrete or similar durable material.

Fine, Rs. 50.

16. *Loaded pack-animals.*—No person shall drive upon a public street, at the same time, more than two loaded pack-animals.

Fine, Rs. 10.

17. *Foals.*—No person riding or driving a mare on any public street shall allow a foal to accompany the mare unless it is secured.

Fine, Rs. 10.

18. *Driving cart in centre of a public street.*—No person shall drive a cart on the centre of any public street on which cart-tracks are provided.

Fine, Rs. 10.

19. *Sitting or sleeping.*—No person shall sit or sleep on any public street so as to obstruct traffic.

Fine, Rs. 10.

Regulation of traffic on foot-paths.

20. *Driving or riding on foot-path.*—No person shall wilfully drive or ride any vehicle or cattle on any foot-path set apart for the use of foot-passengers.

Fine, Rs. 10.

Prevention of obstructions, encroachments or excavations on or near public streets, ghats or ferries.

21. *Abandoning or letting loose cattle.*—No person shall abandon or let loose or negligently allow to get loose, any cattle, on any public street.

Fine, Rs. 10.

22. *Children playing or wandering.*—No parent or guardian of any child below the age of seven years shall allow such child to play or wander about on any public street so as to obstruct traffic.

Fine, Rs. 10.

23. *Depositing articles.*—No person shall, without the general or special permission of the Commissioners, deposit any articles on any public street, except for a temporary purpose, or use any public street as a place for keeping any vehicle or cattle, or for washing any article, or for any other private purpose :

Provided that, during the month of April, May and June, between the hours of 10 p.m. and 5 a.m., khatias may be laid on the side of a public street in such a manner as not to cause obstruction or danger to persons using the public street.

Fine, Rs. 10.

24. *Planting trees.* No person shall plant a tree on any public street without the general or special permission of the Commissioners.

Fine, Rs. 10.

25. *Excavations and enclosures.*—No person shall, without the general or special permission of the Commissioners, make any excavation on any public street or on or near any ghat or public ferry or enclose any such street or any part thereof

Fine, Rs. 10 ; daily fine, Rs. 2.

26. *Removing turf or cutting grass.*—No person shall, without the general or special permission of the Commissioners, remove turf or cut grass from any public street or the slopes thereof.

Fine, Rs. 10.

27. *Discharge of water.*—No person shall affix or cause to be affixed to any building owned or occupied by him any gutter, spout or other thing intended for the conveyance and discharge of water, or shall leave in any such building any opening for the discharge of water, in such a way that the water discharged therefrom is thrown or falls upon a public street except through a downpipe or other suitable contrivance reaching to the level of the public street.

Fine, Rs. 10 ; daily fine, Rs. 2.

28. *Breaking in horses.*—No person shall break in horses on any public street not set apart for that purpose.

Fine, Rs. 10 ; on a second or subsequent conviction, Rs. 50.

29. *Flying kites.*—No person shall fly a kite on any public street or in such a way that it may fall on any public street.

Fine, Rs. 10.

30. *Playing games.*—No person shall play any game on any public street.

Fine, Rs. 10.

31. *Throwing stones or missiles.* No person shall throw or discharge any stone or missile on or near public street.

Fine, Rs. 10.

32. *Driving across a drain.*—No person shall drive any vehicle across a public drain in or near any public street so as to cause damage to such drain.

Fine, Rs. 10.

33. *Barbed wire.*—No owner or occupier of land abutting on any public street shall fence such land with barbed wire.

Fine, Rs. 10 ; daily fine, Rs. 2.

34. *Dust-bins.*—No person shall—

(*a*) place any burning material in any municipal dust-bin on or near a public street, or

(*b*) burn in any such dust-bin any paper, leaves, grass wood or other material.

Fine, Rs. 10.

35. *Closed public street.*—No person shall take or drive any motor vehicle, carriage or cart on a public street or part of a street which is closed by order of the Commissioners to all or any specified description of wheeled traffic or displace any barrier or fence or notice erected for the purpose of closing such public street or part thereof.

Fine, Rs. 10.

Regulation of the use or occupation of public streets or places for sale of articles, etc., and provision for the levy of fees for such use or occupation.

36. *Exposing articles for sale.*- Without the general or special permission of the Commissioners which may, if they so direct, be subject to the payment of fees according to a scale prescribed by them at a meeting, no person shall use or occupy any public street or any other public place, for the sale of any article or for the exercise of any calling or for setting up any booth or stall.

Fine, Rs. 10 ; on a second or subsequent conviction, Rs. 50.

Calcutta.—No. 184T.M.—22nd June 1936.—Whereas the Corporation of Calcutta have, by a resolution passed at their meeting held on the 31st March 1936, made a recommendation under clause (*xciii*) of section 477 of the Calcutta Municipal Act, 1923 (Bengal Act III of 1923), that the payment of grants by the Corporation to the Ward Health Associations, for three months from January to March 1936, and for all time thereafter, is a matter likely to promote the public health within the meaning of the clause referred to above :

Now, therefore, in exercise of the power conferred by the said clause, the Government of Bengal (Ministry of Local Self-Government) are pleased to declare that the said matter is one which will promote the public health within the meaning of the said clause.

2. This notification takes effect from the 1st January 1936.

Rajshahi.—No. 5108M.—24th June 1936.—The following draft of by-laws, which has been framed by the Commissioners of the Rajshahi Municipality, in the district of Rajshahi, under section 434 of the Bengal Municipal Act, 1932 (Bengal Act XV of 1932), and which the Government of Bengal (Ministry of Local Self-Government) propose to confirm under section 506 of the Act, is published for the information of persons likely to be affected thereby.

2. The draft will be taken into consideration on the 15th September 1936, and any objection or suggestion received by the undersigned through the District Magistrate and the Divisional Commissioner before that date will be duly considered :—

Draft by-laws.

By-laws under section 434 for regulation of dairy and milk-supply.

1. *Registration of dairymen and dairies.*- The municipal commissioners may require by public notice the registration of all dairymen or persons selling milk and of all dairies within the municipality, within such period as may be fixed by them ; whereupon no person shall keep any dairy within the area administered by the commissioners, unless it has been registered, or carry on the business or trade of cow-keeper, dairyman or purveyor of milk, unless he is registered as such therein:

Provided that a person who sells milk of his own cows or buffaloes in small quantities to his workmen or to his neighbours for their convenience need not be so registered.

Note. In these by-laws the term cow-keeper includes a keeper of buffaloes.

2. No dairy or milk shop shall be registered until the premises in which such trade is carried on have been inspected by the Health Officer or Sanitary Inspector of any competent officer appointed by the commissioners for the purpose and until the commissioners are satisfied with the arrangements for lighting, ventilation, drainage conservancy, water-supply and general sanitary condition of such premises.

3. *Inspection.*- All dairies within a municipality shall be open to inspection at all times by the commissioners or by the Health Officer Sanitary Inspector or a person or persons authorised in this behalf at all hours of the day and night.

4. *Contamination of milk.*- No cow-keeper or diaryman or purveyor of milk or occupier of a milk store or milk shop shall—

(*a*) allow any person residing or employed in or about the premises, suffering from a dangerous or infectious disease or having recently been in contact with a person so suffering, to milk cattle or to handle vessels used for holding or keeping milk or in any way to take part or assist in the conduct of the trade or business of the cow-keeper or dairyman or purveyor of milk or occupier of a milk store or milk shop, so far as regards the production, distribution or storage of milk, or

(*b*) if himself so suffering, or having recently been in contact with a person so suffering, milk cattle or handle vessels used for containing milk or in any way take part in the conduct of his trade or business so far as regards the production, distribution or storage of milk, until in each case all dangers therefrom of the communication of infection to the milk or of its contamination has ceased.

5. The cow-keeper or dairyman or purveyor of milk shall, when so required by the commissioners, the Health Officer, Sanitary Inspector or any other person authorised in this behalf, furnish the names and addresses of his customers, and the sources of supply of milk to his establishment.

6. *Existence of disease among cattle.*—If at any time cattle plague, pleuropneumonia, foot and mouth disease, anthrax, tuberculosis or any disease of the udder exist among the cattle in a dairy or cattled-shed, the dairyman or cow-keeper shall forthwith report such occurrence to the Commissioners and shall not—

(*a*) mix the milk of the diseased cattle therein with other milk,

(*b*) use or sell such milk for human consumption ;

(*c*) use or sell such milk for consumption by any animal unless and until it has been boiled.

7. *Storage, conveyance and distribution of milk.*—No receptacle which is incapable of being readily cleansed, shall be used for the storage or conveyance of milk.

8. Every receptacle used for the storage or conveyance of milk shall be—

(*i*) marked with the name and address of the owner ;

(*ii*) provided with a lid without openings and so constructed and fitted as to prevent the access of dirt, dust, water or of milk which has been splashed above the lid.

9. No such receptacle shall be opened during transit, except for the purpose of checking and sampling the milk.

10. Where milk is delivered in bottles, such bottles must be filled and closed on registered premises, and not thereafter tampered with before delivery to the consumer.

11. Every person engaged in the conveyance or distribution of milk shall take all practical precautions to prevent the milk from being contaminated.

12. Vehicles used for the conveyance of milk shall be kept clean and no live animal shall be conveyed or carried at the same time as the milk.

13. *Ventilation and lighting.*—Every cattle-shed and every building used for keeping or storing milk (other than a cold store) shall be provided with a sufficient area of windows or external openings communicating directly with the external air in order to secure adequate lighting and ventilation.

14. *Lighting.*—Places in which milking is carried on after dark, shall be provided with adequate artificial lighting.

15. *Air-space.*—No cow-keeper or dairyman shall allow any shed to be occupied by a larger number of animals than will leave not less than eight hundred feet of air-space for each cow or buffalo, provided as follows :—

(*a*) in calculating the air-space for the purpose of this by-law, no space shall be reckoned which is more than 16 feet above the floor ; but if the roof or ceiling is inclined, then the mean height of the same above the floor may be taken as the height thereof for the purposes of this by-law ;

(*b*) any cattle-shed constructed and used before the date of the enforcement of this by-law shall be exempted from its operation until two years after that date.

16. *Receptacles for water.*—All receptacles for the storage or conveyance of water shall be kept clean. A dairyman or cow-keeper shall ensure that the drinking water for cows is protected from contamination.

17. *Water-supply.*—Every person in charge of a diary shall cause it to be provided with an adequate supply of good and wholesome water for cleansing such dairy or any vessel that may be used therein for containing milk, and for all other reasonable and necessary purposes in connection with the use thereof.

18. *Cleanliness of cattle-shed.*—No cow-keeper or dairyman or purveyor of milk or occupier of a milk store or milk shop shall use or permit to be used any milk store or milk shop in his occupation as a sleeping apartment or for any purpose incompatible with the cleanliness of the milk shop or milk store and of the milk vessels and the milk therein or in any manner likely to cause contamination of milk therein.

19. No cow-keeper or dairyman or purveyor of milk shall keep swine or poultry in any cattle-shed or other building used by him for keeping cows or in any milk store or other place used by him for keeping milk for sale.

20. Every cow-keeper and dairyman shall cause every part of the interior of every cattle-shed or dairy in his occupation to be thoroughly cleansed from time to time and as often as may be necessary to secure that such places shall be at all times reasonably clean.

21. Every cow-keeper and dairyman shall cause the ceilings and the walls of the cattle-shed or dairy in his occupation to be properly lime-washed at least twice every year and at such other times as may be necessary :

Provided that this requirement shall not apply to such ceilings and walls for which lime-washing is unsuitable.

22. Every cow-keeper and dairyman shall cause the floor of every such cow-shed or dairy to be thoroughly washed, and all dung and offensive matter accumulating inside such shed or dairy to be swept and removed as often as may be necessary but not less than twice every day.

23. *Cleanliness of milk shop and milk store.*—Every occupier of a milk store or shop shall cause every part of the interior to be thoroughly cleansed from time to time and as often as may be necessary to maintain it in a thorough state of cleanliness.

24. *Health and inspection of milch animals in dairies.*—The Commissioners shall cause to be made such inspections of dairy cattle as may be necessary.

25. *Cleanliness of milk vessels.*—Every cow-keeper or dairyman shall from time to time and as often as may be necessary cause every milk vessel that may be used by him for the sale, conveyance or storage of milk to be thoroughly cleansed with steam or clean boiling water and shall otherwise take all proper precautions for the maintenance of such milk vessel in a constant state of cleanliness.

On every occasion when any such vessel shall have been used to contain milk or shall have been returned to him after having been out of his possession, he shall cause such vessel to be forthwith so cleansed.

26. *Protection of milk against infection or contamination.* Every purveyor, seller or retailer of milk shall take all reasonable and proper precaution in connection with the storage and distribution of milk and otherwise to prevent exposure of milk to any infection or contamination.

27. No purveyor, seller or retailer of milk shall deposit or keep any milk intended for sale—

(*a*) in any room or place where it would be liable to become infected or contaminated by impure air or by any offensive, noxious or deleterious gas or substance or by any noxious or injurious emanation, exhalation or effluvium;

(*b*) in any room used as a kitchen or living room;

(*c*) in any room or building or part of a building communicating directly by door, window or otherwise with any room used as a sleeping room or with a water-closet, earth-closet, privy, cesspool or receptacle for ashes or with a room in which there may be any person suffering from an infectious or dangerous disease or which may have been used by any person suffering from any such disease and may not have been properly disinfected; or

(*d*) in any room or building or part of a building in which there is any untrapped inlet to any drain.

28. No cow-keeper or dairyman shall allow any milch cattle belonging to him or under his care or control to be milked for the purpose of obtaining milk for sale unless at the time of milking—

(*a*) the udder and teats of such cow are thoroughly clean; and

(*b*) the hands of the person milking such animals also are thoroughly clean and free from all infection and contamination.

29. All dirt shall be removed from the flanks of the cattle before milking is begun, and every person engaged in milking shall keep his body and clothing clean.

30. The floor of every milk store or milk shop shall be rendered impervious and sloping to a channel, so constructed as to prevent any liquid matter from accumulating; and to lead it directly to a drain outside the building.

31. The owner of a milk store or shop shall cleanse as often as necessary all fittings, floors and furniture.

32. No dairyman or seller of milk shall sell infected or contaminated milk, or milk suspected to be infected or contaminated.

33. No cow-keeper or dairyman shall keep in the shed in which the cattle are milked any animal the milk from which there is reason to believe has conveyed or is likely to convey any infectious disease.

34. It shall be lawful for the Commissioners to close, for such period as they may think fit, a dairy from which infected or contaminated milk is supplied for sale.

35. *Penalty.*—The penalty for the breach of any of the by-laws 3 to 22 and 25 to 33 shall be a fine which may extend to fifty rupees and when the breach is a continuing one, with a further fine not exceeding five rupees for every day after the date of first conviction during which the offender persists in the offence.

Bakarganj. — No. 5127L.S.-G — 24th June 1936.—In exercise of the power conferred by section 11 of the Bengal Local Self-Government Act, 1885 (Bengal Act III of 1885), the Government of Bengal (Ministry of Local Self-Government) are pleased to appoint the following gentlemen to be members of the local boards named below in the district of Bakarganj:—

Sadar local board.

Maulvi Abdul Gaffur.
Maulvi Mohsonuddin Ahmed.
Maulvi Mozaffar Ahmed.
Maulvi Shamshul Alam Choudhury.
Maulvi Abdul Khaleque Khan.
Maulvi Kazi Badiur Rahaman.
Babu Jitendra Nath Ganguli.
Babu Anil Kumar Das Gupta, B.L.
Babu Parbati Charan Haldar.
The Circle Officer, Mehendiganj (*ex-officio*).

Bhola local board.

Khan Sahib Maulvi Efazuddin Ahmed.
Khan Sahib Maulvi Nuruzzaman.
Babu Mahendra Nath Ray Choudhury.
The Circle Officer, Bhola (*ex-officio*).

Hooghly.—No. 5147L.S.-G.—25th June 1936.—It is hereby notified that under section 7 of the Bengal Local Self-Government Act, 1885 (Bengal Act III of 1885), the following gentlemen have been elected to be members of the Hooghly district board :—

Elected by Sadar local board.

Babu Tarak Nath Mukherjee, B.Sc.
Babu Bishnu Narayan Kundu.
Babu Monmohan Sinha Roy.
Babu Jagadish Prosad Basu, B.L.
Babu Nagendra Nath Sen, B.L.
Babu Dhirendra Nath Mukherjee.
Khan Sahib Chawdhury Muhammad Abdulla.

Elected by Serampore local board.

Maulvi Shaik Amjed Ali.
Babu Kanai Lal Goswami.
Babu Amar Nath Mukherjee.
Rai Sahib Nibaran Chandra Mukherjee.
Babu Ekkari Chandra Mukherjee.
Babu Jamini Kanta Singha Roy.
Babu Bata Krishna Banerjee.

Elected by Arambagh local board.

Mr. Tinkari Mukherji.
Mr. Kishori Mohan Banerji.
Abdul Waheb Maulvi.
Mr. Keshab Chandra Mondal.
Mr. Gostha Behari De.
Hazi Mirza Johadar Rahim.

2. Under section 7 of the Act, the Government of Bengal (Ministry of Local Self-Government) are pleased to appoint the following gentlemen to be members of the above district board :—

The Subdivisional Officer, Sadar.
The Subdivisional Officer, Serampore.
The Subdivisional Officer, Arambagh.
Rai Satish Chandra Mukherji Bahadur.
Maulvi Jasimuddin Mallik Sarcar.
Babu Abani Nath Barman.
Babu Jogendra Mohan Sinha.
Babu Satya Bikash Banerji.
Babu Atul Chandra Chaudhury.
Babu Keshab Chandra Nag.

CORRIGENDA.

Minister-in-charge: The Hon'ble Sir Bijoy Prasad Singh Roy, Kt.

No. 5105M.—22nd June 1936.—In Government notification No. 2757M., dated the 24th April 1935, published at pages 1014-15 of Part I of the *Calcutta Gazette*, dated the 30th April 1936, make the following corrections :—

Salipur (jurisdiction list 33).

For " 471-478-487 " *read* " 471-478, 487."

Subudhipur (jurisdiction list 32).

For " 993 " *read* " 933."

Baruipur (jurisdiction list 31).

For " 708-724 " *read* " 708-714."

For "2837, 3040 " *read* " 2837-3040."

Chittagong. — No. 5116L.S.-G. — 24th June 1936.—In the table appended to notification No. 901L.S.-G., dated the 5th February 1936, declaring the union board areas of the thanas in the Cox's Bazar subdivision in the district of Chittagong, published at pages 340-341 of Part I of the *Calcutta Gazette*, dated the 13th February 1936, make the following alterations :—

Cox's Bazar police-station.

In page 340, column 5, of the table showing the mauzas constituting the Idgaon union No. I *read* Ichakhali 2 *for* Jehakhali 2.

Ramu police-station.

In page 341, column 5, of the table showing the mauzas constituting the Fatehkharkul union No. III, *read* Manir Jhil 6 *for* Manjir Jhil 6.

In page 341, column 5, of the table showing the mauzas constituting the Khuniapalong union No. V, *read* Jungle Dhoapalong 30 *for* Jungle Dheapalong 30.

Chakaria police-station.

In page 341, column 5, of the table showing the mauzas constituting the Chiringa union No. VII, *read* Hajian 39 *for* Fazian 39.

In page 341, column 5, of the table showing the mauzas constituting the Dulahazara union No. VIII, *read* Khuntakhali 62 *for* Bhutakhali 62.

Public Health.

NOTIFICATIONS.

Minister-in-charge: The Hon'ble Sir Bijoy Prasad Singh Roy, Kt.

Faridpur.—No. 2365P.H.—20th June 1936.—The following draft of an amendment, which in exercise of the power conferred by section 311 (*k*) of the Bengal Municipal Act, 1932 (Bengal Act XV of 1932), the Government of Bengal (Ministry of Public Health) propose to make in rule 15 (*l*) (*a*) of the rules for the regulation of the supply of filtered water to private houses in the Faridpur Municipality, published with notification No. 351 P.H., dated the 28th January 1930, is published for the information of persons likely to be affected thereby.

2. The draft will be taken into consideration on the 14th of August 1936, and any objection or suggestion which may be received by the undersigned through the District Magistrate and the Divisional Commissioner before that date will be duly considered :—

Draft amendment.

(*l*) *For* sub-clause (*a*) of clause (*l*) of rule 15 of the said rules *substitute* the following :—

" (*a*) 2,500 gallons of water per quarter for each rupee ; and "

No. 2403P.H. — 24th June 1936.—In exercise of the powers conferred by section 3 (*21*) (*b*) of the Calcutta Municipal Act, 1923 (Bengal Act III of 1923), the Government of Bengal (Ministry of Public Health) are pleased to declare Typhoid, Para-typhoid A and Para-typhoid B to be dangerous diseases for the purposes of the said Act.

G. S. DUTT,

Secy. to the Govt. of Bengal.

EDUCATION DEPARTMENT.

NOTIFICATIONS.

Minister-in-charge: The Hon'ble Khan Bahadur M. Azizul Haque.

Dacca. — No. 3435T.Edn. — 18th June 1936. —Mr. Birendra Chandra Gupta, Principal, Ahsanullah School of Engineering, Dacca, is allowed leave on average pay for the period from the 4th to 30th June 1936, under rules 81 (*b*) (*i*) and 82 (*b*) of the Fundamental Rules.

Dacca.—No. 3439T.Edn. — 19th June 1936.— The Government of Bengal (Ministry of Education) are pleased to appoint Mr. M. Hasan, M.A. (Oxon.), to be a member of the Governing Body of the Dacca Intermediate College as the representative of the Board of Intermediate and Secondary Education, Dacca, for the academic session 1936-37.

Pabna.—No. 3445T.Edn. — 19th June 1936.— Maulvi Sadaruddin Ahmed, officiating Head Master, Pabna Zilla School, is confirmed in the Bengal Educational Service as Head Master of a Government High School, with effect from the 1st April 1934, *vice* Mr. Phakir Das Banarji.

Calcutta.—No. 3463T.Edn.—20th June 1936. — Babu Bholanath Sarkar, officiating Head Assistant, office of the Director of Public Instruction, Bengal, is appointed to act as Personal Assistant to the Director of Public Instruction, Bengal, for the period from the 4th to the 30th June 1936 (both days inclusive), during the absence, on leave, of Khan Bahadur Maulvi Abdul Latif Khan, or until further orders.

The Charitable Endowments Act, 1890.

No. 3358T.Edn.—16th June 1936.—WHEREAS by notification No. 305, dated the 16th January 1906, published at page 114, Part I of the *Calcutta Gazette*, dated the 24th January 1906, it was notified that the Governor of Bengal in exercise of the powers conferred upon him by sections 4 and 5 of the Charitable Endowments Act, No. VI of 1890, did thereby order and direct that the securities described in the First Schedule thereunder written should as from the first publication of the said notification vest and be thenceforth vested in the Treasurer of Charitable Endowments for the territories subject to the Government of Bengal to be held by him and his successors subject to the provisions of the said Act and the rules from time to time framed thereunder by the Governor-General of India in Council upon trust to permit the same to be administered in accordance with the terms of a scheme of management the particulars whereof are set forth in the Second Schedule thereunder written. And it was thereby further notified that the said scheme should come into operation on the vesting of the said property in the said Treasurer of Charitable Endowments.

AND WHEREAS accumulations having resulted of the surplus interest of the securities vested by the said recited notification the same have been invested in the purchase of the securities particulars of which are contained in the Schedule hereunder written. And it has been resolved that the said securities shall be vested in the said Treasurer of Charitable Endowments upon the same trusts as are declared by the said recited notification of and concerning the securities therein comprised.

NOW IT IS HEREBY NOTIFIED that the Government of Bengal in the Ministry of Education, in exercise of the powers conferred by section 4 and 5 of the Charitable Endowments Act, 1890, upon the application of and with the concurrence of the Director of Public Instruction, Bengal, the present Administrator of the said Fund, doth hereby order and direct that the securities the particulars of which are contained in the Schedule hereunder written shall, as from the publication of this notification, vest and be vested in the said Treasurer of Charitable Endowments for the territories subject to the Government of Bengal to be held by him and his successors (subject to the provisions of the Charitable Endowments Act, 1890, and the rules from time to time to be framed thereunder) upon the like trusts and to and for the like purposes in all respects as are declared by and in the said recited notification No. 305, dated the 16th January, 1906, of and concerning the securities of which particulars are contained in the First Schedule to the said recited notification.

The schedule above referred to.

		Loan.	Amount.
			Rs.
No. 2647/2640	..	5 per cent. Calcutta Port Trust Debentures, 1926.	4,000
Stock of	..	3½ per cent loan, 1865.	100
Stock of	..	3½ per cent. loan, 1900-01.	2,100

H. GRAHAM,

Secy. to the Govt. of Bengal.

DARJEELING, THE 20TH JUNE 1936.

RESOLUTION—No. 3449T.EDN.

Minister-in-charge: The Hon'ble Khan Bahadur M. Azizul Haque.

Read—

Resolution No. 1011Edn., dated the 7th May 1921, by the Government of Bengal (Ministry of Education) creating a temporary Board of Intermediate and Secondary Education at Dacca, and subsequent resolutions and notifications on the subject.

Pending the establishment of a Statutory Provincial Board for Secondary Education, a Board of Intermediate and Secondary Education was created for the Dacca University area in 1921 on a temporary basis for one year and its term has since been extended from year to year. The term of the Board as constituted for 1935-36 was extended up to the end of June 1936. The Government of Bengal (Ministry of Education) have now decided to reconstitute the Board for the further period from 1st July 1936 up to the end of February 1937 as follows :—

(1) Mr. A. F. Rahman, M.A. (Oxon.), Vice-Chancellor of the University of Dacca—Chairman.

(2) The Commissioner of the Dacca Division.

(3) The Dean of the Faculty of Arts of the Dacca University—Representative of the Dacca University.

(4) The Dean of the Faculty of Science of the Dacca University—Representative of the Dacca University.

(5) The Head of the Department of Arabic and Islamic Studies of the Dacca University—Representative of the Dacca University.

(6) Mr. M. Hasan, M.A. (Cal:), B.A. (Oxon.)—Representative of the Dacca University.

(7) Dr. Harendracoomar Mookerjee, M.A., PH.D.—Representative of the Calcutta University.

(8) Mr. Pramathanath Banerjea, M.A., B.L., Bar.-at-Law—Representative of the Calcutta University.

(9) The Principal, Dacca Intermediate College—Representative of the Intermediate Colleges in Dacca.

(10) The Principal, Jagannath Intermediate College, Dacca—Representative of the Intermediate Colleges in Dacca.

(11) The Principal, Islamic Intermediate College, Dacca—Representative of the Intermediate Colleges in Dacca.

(12) Khan Bahadur Maulvi Muhammad Wahidullah, M.A., Principal, Islamic Intermediate College, Serajganj—Representative of the Intermediate Colleges outside Dacca.

(13) The Superintendent, Hooghly Madrasah—Representative of High Madrasahs.

(14) The Principal, Government Madrasah, Sylhet—Representative of the Government of Assam.

(15) The Head Master, Dacca Collegiate School—Representative of the High English Schools in Dacca.

(16) Babu Benode Behari Banerjee, M.A., Head Master, K. L. Jubilee High English School, Dacca—Representative of the High English Schools in Dacca.

(17) The Head Master, Dacca Government Moslem High School—Representative of the High English Schools in Dacca.

(18) The Principal, Eden High School for Girls, Dacca—Representative of the High English Schools in Dacca.

(19) Mr. P. K. Bose, Bar.-at-Law—Representative of the non-Muhammadan community in Dacca.

(20) Rai Shasanka Kumar Ghosh Bahadur, C.I.E., Government Pleader, Dacca—Representative of the non-Muhammadan community in Dacca.

(21) Dr. R. C. Majumdar, M.A., PH.D.—Representative of the non-Muhammadan community in Dacca.

(22) Mr. Dhirendra Chandra Roy—Representative of the non-Muhammadan community in Dacca.

(23) Rev. H. D. Northfield, M.A., Baptist Mission, Dacca—Representative of the non-Muhammadan community in Dacca.

(24) Nawabzada Khwaja Muhammad Afzal, Khan Bahadur—Representative of the Muhammadan community at Dacca.

(25) Khan Bahadur Maulvi Quazi Zahirul Haq—Representative of the Muhammadan community at Dacca.

(26) Maulvi Muhammad Ibrahim, B.L.—Representative of the Muhammadan community at Dacca.

(27) Mr. K. Sahabuddin—Representative of the Muhammadan community at Dacca.

(28) Maulvi Fazlur Rahman, M.A., B.L.—Representative of the Muhammadan community at Dacca.

(29) The Inspector of Schools, Dacca Division.

(30) The Principal, Teachers' Training College, Dacca.

The Board will have a Secretary who will be a whole-time salaried officer but not a member of the Board.

The Chairman and the members are honorary.

The Board will exercise the same powers and functions as those which were prescribed in resolution No. 1011Edn., dated the 7th May 1921.

Order.—Ordered that a copy of the resolution be published in the *Calcutta Gazette.*

By order of the Govt. of Bengal
(Ministry of Education),

H. GRAHAM,
Secy. to the Govt. of Bengal.

Registration.

NOTIFICATIONS.

Minister-in-charge: The Hon'ble Khan Bahadur M. Azizul Haque.

24-Parganas. — No. 3458T.Regn. — 20th June 1936.—In pursuance of section 5, sub-section (*1*) of the Indian Registration Act, XVI of 1908, and in supersession of all previous orders on the subject, the Government of Bengal (Ministry of Education) are pleased to define the jurisdiction of the registration sub-districts of Alipore, Sealdah and Baruipur, in the district of the 24-Parganas, as follows:—

(1) Alipore—Over the police-stations of Tollygunj, Bhowanipur, Ekbalpur, Watganj, Garden Reach, Behala, Motiabruz and Maheshtola.

(2) Sealdah—Over the police-stations of Chitpur, Manicktala, Beliaghata, Entally, Beniapukur and Ballyganj.

(3) Baruipur—Over the police-stations of Baruipur and Sonarpur.

Calcutta. -No. 3460T.Regn.—20th June 1936.—Rai Sahib Mohim Chandra Batabyal, Registrar of Assurances, Calcutta, is allowed leave on average pay for twenty-one days, with effect from the 1st June 1936, under rule 81(*b*)(*ii*) of the Fundamental Rules.

This cancels the order in notification No. 3302-T.Regn., dated the 9th June 1936.

Jessore.—No. 3478T.Regn.—23rd June 1936.—In exercise of the power conferred by section 3 of the Bengal Muhammadan Marriages and Divorces Registration Act, 1876 (Bengal Act I of 1876), the Government of Bengal (Ministry of Education) are pleased to appoint Maulvi Saiyid Wajed Ali to be a Muhammadan Registrar within the police-station of Narail, in the district of Jessore.

Jessore.—No. 3479T.Regn.—23rd June 1936.—In exercise of the power conferred by section 2 of the Kazis Act, 1880 (Act XII of 1880), the Government of Bengal (Ministry of Education) are pleased to appoint Maulvi Saiyid Wajed Ali to be the Kazi for the celebration of marriages and the performance of other rites and ceremonies within the police-station of Narail, in the district of Jessore.

Chittagong.—No. 3484T.Regn.—23rd June 1936.—In exercise of the power conferred by section 3 of the Bengal Muhammadan Marriages and Divorces Registration Act, 1876 (Bengal Act I of 1876), the Government of Bengal (Ministry of Education) are pleased to appoint Maulvi Abul Fazal to be a Muhammadan Registrar within the police-station of Anwara, in the district of Chittagong.

Chittagong.—No. 3485 T. Regn.—23rd June 1936.—In exercise of the power conferred by section 2 of the Kazis Act, 1880 (Act XII of 1880), the Government of Bengal (Ministry of Education) are pleased to appoint Maulvi Abul Fazal to be the Kazi for the celebration of marriages and the performance of other rites and ceremonies within the police-station of Anwara, in the district of Chittagong.

Noakhali.—No. 418Regn. — 24th June 1936. — In exercise of the power conferred by section 3 of the Bengal Muhammadan Marriages and Divorces Registration Act, 1876 (Bengal Act I of 1876), the Government of Bengal (Ministry of Education) are pleased to appoint Maulvi Kazi Azizul Haque temporarily to be a Muhammadan Registrar within the police-station of Chhagalnaiya, in the district of Noakhali, during the absence, on leave, of Maulvi Abu Sayeed Muhammad Zulfiqur, or until further orders.

Noakhali. — No. 419Regn. — 24th June 1936.—In exercise of the power conferred by section 2 of the Kazis' Act, 1880 (Act XII of 1880), the Government of Bengal (Ministry of Education) are pleased to appoint Maulvi Kazi Azizul Haque temporarily to be the Kazi for the celebration of marriages and the performance of other rites and ceremonies within the police-station of Chhagalnaiya, in the district of Noakhali, during the absence, on leave, of Maulvi Abu Sayeed Muhammad Zulfiqur, or until further orders.

H. GRAHAM,

Secy. to the Govt. of Bengal.

Orders by the Director of Public Instruction, Bengal.

Bengal Educational Service.

Birbhum.—No. 29B.—15th June 1936.—Babu Jyotish Chandra Sikdar, District Inspector of Schools, Birbhum, in the Bengal Educational Service, is granted leave on average pay for three months and fifteen days, under Fundamental Rule 81 (*b*) (*ii*), with effect from 3rd July 1936, or any subsequent date on which he avails himself of it.

Calcutta.—No. 30B.—16th June 1936.—Khan Bahadur Maulvi Abdul Latif Khan, Personal Assistant to the Director of Public Instruction, Bengal, in the scale of Rs. 400—20—600, is granted, in terms of rule 81 (*b*) (*ii*) of the Fundamental Rules, leave on average pay for the period from 4th June 1936 to 30th June 1936, both days inclusive.

2. He is permitted to prefix the gazetted holiday on 3rd June 1936 and to suffix 1st July 1936, which is also a gazetted holiday, to his leave.

J. M. BOTTOMLEY,

Director of Public Instrn., Bengal.

Orders by the Inspector-General of Registration, Bengal.

Dacca - 24-Parganas. — No. 352. — 19th June 1936.—Babu Sudhir Kumar Biswas, Sub-Registrar, attached to Alipore, 24-Parganas, officiating as Sub-Registrar of Barangail, in the district of Dacca, is allowed leave on average pay for one month, under rule 81 (*b*) of the Fundamental Rules, with effect from the 19th May 1936.

Dacca.—No. 353.—19th June 1936.—Maulvi Chaudhury Wahiduddin Ahmad Siddique, Sub-Registrar, attached to Dacca, is appointed, on termination of his officiating appointment at Rupganj in the same district, to act as Sub-Registrar of Barangail, also in the same district, during the absence, on leave, of the permanent incumbent, or until further orders.

Khulna. — No. 354. — 19th June 1936. — Babu Ramesh Chandra Mukherji, Sadar Joint Sub-Registrar of Khulna, is allowed leave on average pay for six days, under rule 81 (*b*) (*ii*) of the Fundamental Rules, with effect from the 22nd June 1936.

Chittagong.—No. 355.—20th June 1936.—This department notification No. 346, dated the 16th June 1936, appointing Maulvi A. F. M. Fazlul Karim, 2nd Joint Sub-Registar of Fatikchari, at Kazirhat, in the district of Chittagong, to be its 1st Joint Sub-Registrar, at Kali Munshir Hat (Nanupur), in the same district, is cancelled.

Chittagong.—No. 356.—20th June 1936.—Maulvi Shamsul Huda, Sub-Registrar attached to Chittagong, officiating at present as 1st Joint Sub-Registrar of Patiya, at Boalkhali, in the district of Chittagong, is appointed to act, until further orders, as 1st Joint Sub-Registrar of Fatikchari, at Kali Munshir Hat (Nanupur), in the same district.

This cancels this department notification No. 345, dated the 16th June 1936, appointing him to act as its 2nd Joint Sub-Registrar at Kazirhat.

Noakhali-Jessore.—No. 357.—22nd June 1936.—Babu Bhababhuti Bhattacharji, Sub-Registrar, at present attached to Jessore, was on leave while attached to Noakhali during the periods mentioned below :—

(1) Leave on average pay, under rule 81(*b*)(*ii*) of the Fundamental Rules, from the 2nd September 1935 to the 14th November 1935 (inclusive).

(2) Leave on average pay, under rule 81(*b*)(*ii*) of the Fundamental Rules, from the 2nd January 1936 to the 26th April 1936 (inclusive).

(3) Extraordinary leave without allowances, under rule 85(*a*) of the Fundamental Rules, from the 27th April 1936 to the 3rd May 1936 (inclusive).

24-Parganas.—No. 358.—22nd June 1936.—Babu Gopendra Nath Roy, Sub-Registrar of Dakshin Barasat, in the district of the 24-Parganas, is allowed leave on average pay for three days, under rule 81(*b*)(*ii*) of the Fundamental Rules, with effect from the 2nd July 1936.

Malda.—No. 359.—22nd June 1936.—Maulvi Md. Maniruddin, Sub-Registrar of Chanchal, in the district of Malda, is allowed leave on average pay for one month, under rule 81 (*b*)(*ii*) of the Fundamental Rules, in extension of the leave granted to him in this department notification No. 282, dated the 12th May 1936.

Hooghly-24-Parganas. No. 360.—22nd June 1936.—Babu Sailendra Nath Sil, Sub-Registrar attached to Hooghly, at present posted temporarily to Alipore, 24-Parganas, is allowed leave on average pay for one month, under rule 81(*b*)(*ii*) of the Fundamental Rules, with effect from the 2nd July 1936, or any subsequent date on which he avails himself of it.

Chittagong.—No. 361.—22nd June 1936.—Babu Kausik Lal Ray, Sub-Registrar of Patiya, in the district of Chittagong, is allowed leave on average pay for one month and twelve days, under rule 81(*b*)(*ii*) of the Fundamental Rules, in extension of the leave granted to him in this department notification No. 256, dated the 4th May 1936.

Dinajpur.—No. 362.—22nd June 1936.—Maulvi Tajuddin Ahmed, Sub-Registrar attached to Dinajpur, is allowed leave on average pay for fifteen days, under rule 81(*b*)(*ii*) of the Fundamental Rules, in extension of the leave granted to him in this department notification No. 292, dated the 19th May 1936.

Jessore.—No. 363.—22nd June 1936.—Babu Jatindra Nath Basu, Sub-Registrar of Salkopa, in the district of Jessore, is allowed leave on average pay for two months, under rule 81(*b*)(*ii*) of the Fundamental Rules, with effect from the date on which he may be relieved.

Jessore-Khulna.—No. 364.—22nd June 1936.—Maulvi Md. Abdul Goffar, Sub-Registrar attached to Khulna, officiating at present as Sub-Registrar of Jhenida, in the district of Jessore, is appointed to act as Sub-Registrar of Salkopa in the same district, during the absence, on leave, of the permanent incumbent, or until further orders.

This cancels this department notification No. 334, dated the 11th June 1936, appointing him to be the Sub-Registrar of Paikgacha, in the district of Khulna.

Dacca.—No. 365.—22nd June 1936.—Babu Sanjib Chandra Ghosh, Sub-Registrar of Harirampur (Lesraganj), in the district of Dacca, is allowed leave on average pay for one month, under rule 81(*b*)(*ii*) of the Fundamental Rules, with effect from the 29th June 1936.

Dacca.—No. 366.—22nd June 1936.—Maulvi A. M. Azharul Islam Bhuiya, Sub-Registrar attached to the Sadar Registration office at Dacca, is appointed to act as Sub-Registrar of Harirampur (Lesraganj), in the same district, during the absence, on leave, of the permanent incumbent, or until further orders.

Nadia.—No. 367.—24th June 1936.—Babu Saroj Kumar Sen, Sub-Registrar of Ranaghat, in the district of Nadia, is allowed leave on average pay for a fortnight, under rule 81(*b*)(*ii*) of the Fundamental Rules, with effect from the 8th instant.

Nadia.—No. 368.—24th June 1936.—Babu Bhupendra Narayan Rakshit, Sub-Registrar attached to Nadia, is appointed to act as Sub-Registrar of Ranaghat in the same district, with effect from the 17th June 1936, during the absence, on leave, of the permanent incumbent, or until further orders.

Jessore.—No. 369.—24th June 1936.—Babu Bimalapada Mukharji, Sub-Registrar of Jhenidah, in the district of Jessore, under orders of transfer to Manirampur in the same district, is allowed leave on average pay for one month, under rule 81 (*b*) (*ii*) of the Fundamental Rules, in extension of the leave granted to him in this department notification No. 318, dated the 8th June 1936.

Mymensingh.—No. 370.—24th June 1936.—Maulvi Khundakar Abdul Jabbar, 2nd Joint Sub-Registrar of Gopalpur at Madhupur, in the district of Mymensingh, is appointed to be 1st Joint Sub-Registrar of Kalihati, at Ghatail, in the same district.

Mymensingh.—No. 371.—24th June 1936.—Maulvi Gazanfar Ali Khan Eusofjai, Sub-Registrar attached to Sadar Registration Office, Mymensingh, at present officiating as 1st Joint Sub-Registrar of Kalihati at Ghatail, in the district of Mymensingh, is appointed to act, until further orders, as 2nd Joint Sub-Registrar of Gopalpur at Madhupur in the same district.

Khulna.—No. 372.—25th June 1936.—Babu Nakuleswar Chakrabutti, officiating Sub-Registrar of Satkhira, in the district of Khulna, is allowed leave on average pay for eight days, under rule 81(*b*)(*ii*) of the Fundamental Rules, with effect from the date on which he may be relieved.

Nadia-Khulna.—No. 373.—25th June 1936.—Babu Nirmal Kumar Mukherji, Sub-Registrar attached to Nadia, officiating as Joint Sub-Registrar of Morrelganj, at Kachua, in the district of Khulna, is allowed leave on average pay for one month, under rule 81(*b*)(*ii*) of the Fundamental Rules, with effect from the date on which he may be relieved.

Khulna.—No. 374.—25th June 1936.—Maulvi Ekramul Kabir, Sub-Registrar attached to Khulna, is appointed to act as Joint Sub-Registrar of Morrelganj at Kachua in the same district, during the absence, on leave, of Babu Nirmal Kumar Mukharji, Sub-Registrar, or until further orders.

S. CHATTERJEA,

Inspector-General of Registration, Bengal.

FINANCE DEPARTMENT.

Audit.

ADDENDA AND CORRIGENDA.

No. 5422F.—20th June 1936.—The following corrections, which have been authorised, are published for general information :—

Fundamental and Subsidiary Rules, 1st Edition (Reprint), 1929.

Page 17.—F. R. 17.—Insert the following as paragraph (3) of the Audit Instructions under this rule :—

(3) The minimum of the officer's time scale of pay (including overseas pay) may be treated as his average pay for the purpose of calculating half average pay for the period of "leave not due", as well as for the purpose of allowing the minima of half average pay not exceeding the average pay under Fundamental Rule 90.

Page 186—F. R. 117.—Add the following as Audit Instruction (3) after the existing Audit Instructions as inserted under Fundamental Rule 117 by correction slip No. 230 :—

(3) The leave salary contribution for the period of joining time taken by a Government servant in continuation of leave under clause (*b*) of Fundamental Rule 105 before reversion from foreign service, should be calculated on the pay he was getting immediately before he proceeded on leave.

Page 122—F. R. 71.—Substitute the following for the existing Government of India's orders under Fundamental Rule 71 :—

"Government of India's orders.—The Governor General in Council has ordered that a Government servant who has taken leave in Asia on medical certificate may not return to duty until he has produced a medical certificate of fitness in the following form :—

'We the members of a Medical Committee/I, Civil Surgeon of ...../a registered Medical Practitioner of.....do hereby certify that we/I have carefully examined A B C of the Department and find that he has recovered from his illness and is now fit to resume duties in Government service.

We/I also certify that before arriving at this decision we/I have examined the original medical certificate(s) and statement(s) of the case (or certified copies thereof) on which leave was granted or extended and have taken these into consideration in arriving at our/my decision.'

The original medical certificate(s) and statement(s) of the case on which the leave was originally granted or extended shall be produced before the authority asked to issue the above certificate.

2. If the Government servant on leave is a gazetted officer, such certificate should be obtained from a Medical Committee, except (1) in cases in which the leave is for not more than three months or (2) in cases in which the leave is for more than three months or leave for three months or less is extended beyond three months, but the Medical Committee granting the original certificate or the certificates for extension state at the time of granting such certificate, that the Government servant need not appear before another Medical Committee for obtaining the certificate of fitness.

N.B.—These orders also apply to Government servants under the rule-making control of the Government of Bengal."

Insert the following as Government of India's decision under Government of India's orders :—

"Government of India's decision.—It has been decided that a certificate signed by one or two medical officers obtained under Subsidiary Rule 225 is equivalent for all practical purposes to a certificate from a Committee and such cases should not be excluded from the operation of paragraph 2 of the Government of India's orders above.

N.B.—This decision will also apply to Government servants under the rule-making control of the Government of Bengal."

Page 77.—S. R. 153.—Insert the following as Government of India's decision under Subsidiary Rule 153 as amended by correction slip No. 94, dated the 26th May 1930 :—

"Travelling allowance should not be paid to a Government servant for journeys performed by him to appear before a Medical Committee for obtaining a certificate of fitness to return to duty.

N.B.—This decision will also apply to Government servants under the rule-making control of the Government of Bengal."

The Bengal Financial Rules, 1st Edition (Reprint), 1930.

Page 19—Rule 30 (a).—Insert the following explanation below Note 1 under this rule :—

"*Explanation.*—The terms 'overcharges' and 'undercharges' used in this note mean overcharges and undercharges of railway freight and fares only. They refer to shortages and excesses in the items included in a bill which has already been rendered ; the omission of an item in a bill is not an 'undercharge' nor is the erroneous inclusion of an item an 'overcharge'".

E. N. BLANDY,
Secy. to the Govt. of Bengal.

COMMERCE DEPARTMENT.

NOTIFICATIONS.

No. 4293Com.—25th June 1936.—In exercise of the power conferred by section 29 of the Indian Boilers' Act, 1923 (V of 1923), the Governor in Council is pleased to make the following amendment in the Bengal Boilers' Rules, 1928, published under notification No. 2827Com., dated the 7th July 1928, namely :—

After rule 4, *insert* the following as rule 4(A) :—

4(A). *Term of office of non-official members of the Commission.*—A non-official member of the Commission shall hold office for a term of three years, but shall, at the expiration of such term, be eligible for re-appointment.

No. 4350Com.—25th June 1936.—In exercise of the powers conferred by section 30 of the Indian Mines Act, 1923 (IV of 1923), the Governor in Council is pleased to direct that the following amendments shall be made to the rules for coal mines and the rules for mines other than coal mines, published with Bengal Government notification No. 4788 Com., dated the 29th August 1924, namely :—

Amendments in the rules for coal mines.

1. In Chapter III of the rules for coal mines—

(*a*) For rule 9 the following rule shall be substituted :—

9. The register of all persons employed in the mine shall be maintained, as required by sub-section (*1*) of section 28 of the Act, in the form shown in Schedule A. The register shall be kept at the office of the mine.

(*b*) For rule 9A the following rule shall be substituted :—

9A. The register required by sub-section (*4*) of section 28 of the Act shall be maintained in the form shown in Schedule E and all entries therein shall be made at the entrance or entrances to the mine and at the time when the person against whose name the entries are made entered or left the mine. The register shall be kept at the entrance of the mine.

(*c*) After rule 11 the following rule shall be inserted as rule 11A :—

11A. The register of accidents referred to in sub-section (*2*) of section 20 of the Act shall be in the form shown in Schedule C.

2. After Chapter VI of the rules for coal mines the following new Chapter VII shall be inserted and the existing Chapter VII shall be renumbered as Chapter VIII and exsisting rules 23 to 27 in Chapter VIII as renumbered shall be renumbered as rules 30 to 35 :—

Chapter VII.

Certificate of fitness for employment underground of persons who have not completed 17 years of age.

23. Before any person who has not completed his seventeenth year is employed underground, the manager shall arrange to have him examined by a qualified medical practitioner and, if after examination the medical practitioner is of opinion that such person is fit for employment underground, he shall grant him a certificate in the Form in Schedule D.

24. Every certificate granted by a qualified medical practitioner shall be prepared by filling up the foil and counterfoil on both of which shall be impressed the left thumb mark of the person in whose name the certificate is granted.

25. The qualified medical practitioner shall, when satisfied as to the correctness of the entries made therein, sign the foil and initial the counterfoil, and shall deliver the foil to the manager for safe custody.

26. No certificate granted under rule 23 shall be valid for a period exceeding twelve months. Every person in respect of whom a certificate of fitness has been issued shall be re-examined within twelve months of the last previous examination unless in the meantime he has completed his seventeenth year and the qualified medical practitioner making such re-examination may renew the certificate for a further period not exceeding twelve months or may suspend or revoke the said certificate.

27. A qualified medical practitioner who refuses to grant a certificate referred to in rule 23 or suspends or revokes an existing certificate under rule 26 shall state the reasons for refusing to grant a certificate or for suspending or revoking the certificate as the case may be. If the manager of the mine disagrees with the opinion of such medical practitioner, he may refer the case to the Chief Inspector or Inspector. The Chief Inspector or the Inspector shall refer the case for decision to a second qualified medical practitioner and such decision shall be final.

28. Every person who has been certified as fit for employment underground shall before he is so employed be provided by the manager with a metal token. Such token shall be stamped with the letter "P" and numbered. The number shall be the same as that of the certificate of fitness.

29. A record of every token so issued and the person to whom it was issued shall be maintained in the office of the mine.

3. In the rules for coal mines—

(*a*) For the existing Schedule A the following Schedule shall be substituted :—

Schedule A.

(*See* rule 9.)

Register of employees.

Name and caste of the employee.	Age.	Sex.	Nature of employment.	Date of commencement of employment.	Periods of work.		Intervals for rest to he which—— she is entitled.		Days of rest to which he/she is entitled.	Relays* to which he/she belongs.
					Begins.	Ends.	Begins.	Ends.		
					a.m.	a.m.	a.m.	a.m.		
					p.m.	p.m.	p.m.	p.m.		

* In mines where work is carried on by a system of relays.

(*b*) For the existing Schedule B the following Schedule shall be substituted :—

Schedule B.

(*See* rule 9B.)

Notice of commencement and end of work.

Name of mine———————

Name of owner of mine———————

It is hereby notified that persons employed in this mine shall begin and end their periods of work between the hours set out below :—

Kind of worker.	1st relay.				2nd relay, if any.				3rd relay, if any.			
	Period of work.		Rest interval.		Period of work.		Rest interval.		Period of work.		Rest interval.	
	Begins	Ends.	Begins.	Ends.	Begins.	Ends.	Begins.	Ends.	Begins.	Ends	Begins.	Ends.
	a.m. p.m.	a.m. p.m.	a.m. p.m.	a.m. p.m.	a.m. p.m	a.m. p.m.	a m. p .m	a.m. p.m.	a m. p m	a m. p.m	a.m. p.m.	a .m . p m.

Note.—The words and letters not wanted should be scored out.

In the case of underground workers, the entry in the rest interval column will be nil.

(*c*) After Schedule B the following Schedules shall be added :—

Schedule C.

(*See* rule 11A.)

Register of Minor Accidents.

Date of entry.	Date of accident	Name of persons injured.	Nature of work.	Nature of injury.	Nature of accident.	Duration of enforced absence from work	Signature of Manager
1	2	3	4	5	6	7	8

Schedule D.

(*See* rule 23.)

Form of certificate of fitness for employment underground in a mine.

Counterfoil of certificate of fitness.	Certificate of fitness.
Serial No.	Serial No. .....
Date	Date .....
	This certificate unless renewed shall not be
2. Name	valid after.....*
	I hereby certify that I have personally
3. Father's name	examined (name) .....
	.....
4. Sex and caste or religion.....	son/daughter of.....
	(caste, etc.).....
.....	residing at.....
	who is desirous of being employed in a
5. Residence	mine and that his/her age as nearly as can
	be ascertained from my examination is.....
6. Age certified	years and that he/she is fit for employment
	underground in a mine as an adult. His/Her
7. Distinctive marks.....	descriptive marks are.....
.....	.....
Left thumb impression.	Left thumb impression.
....	.....
Qualified Medical Practitioner.	Qualified Medical Practitioner.
	Renewed till .....
	Date.....
	Signature of qualified medical practitioner.

*Date twelve months after date of issue to be filled in by the medical practitioner.

Schedule E.

(*See* rule 9A.)

Register of persons employed underground.

(Persons entering the mine shall be shown by a X in the column marked "In" against the name.)

(Persons leaving the mine shall be shown by a X in the column marked "Out" against the name.)

(All entries shall be made in ink.)

Period of work commences at $\frac{\text{p.m.}}{\text{a.m.}}$

Period of work ends at $\frac{\text{p.m.}}{\text{a.m.}}$

For week commencing and ending

Name of person.	Sex	Nature of work	Sunday		Monday		Tuesday.		Wednesday		Thursday.		Friday		Saturday.	
			In.	Out.	In.	Out.	In.	Out.	In.	Out.	In.	Out.	In.	Out	In.	Out.

Total number of persons underground.

Total number of women underground.

Percentage of persons below ground who are women.

Signature of Register-keeper.

Amendments in the rules for mines other than coal mines.

4. In Chapter III of the rules for mines other than coal mines for rule 9 the following rule shall be substituted :—

9. The register of all persons employed in the mine shall be maintained, as required by sub-section (*1*) of section 28 of the Act, in the form shown in Schedule A. The register shall be kept at the office of the mine.

5. After Chapter V of the rules for mines other than coal mines the following new Chapter VI shall be added and the existing Chapter VI shall be renumbered as Chapter VII and existing rules 17 to 21 in Chapter VII as renumbered shall be renumbered as rules 24 to 29 :—

Chapter VI.

Certificate of fitness for employment underground of persons who have not completed 17 years of age.

17. Before any person who has not completed his seventeenth year is employed underground, the manager shall arrange to have him examined by a qualified medical practitioner and if after examination the medical practitioner is of opinion that such person is fit for employment underground he shall grant him a certificate in the Form in Schedule C.

18. Every certificate granted by a qualified medical practitioner shall be prepared by filling up the foil and counterfoil on both of which shall be impressed the left thumb mark of the person in whose name the certificate is granted.

19. The qualified medical practitioner shall, when satisfied as to the correctness of the entries made therein, sign the foil and initial the counterfoil, and shall deliver the foil to the manager for safe custody.

20. No certificate granted under rule 17 shall be valid for a period exceeding twelve months. Every person in respect of whom a certificate of fitness has been issued shall be re-examined within twelve months of the last previous examination unless in the meantime he has completed his seventeenth year and the qualified medical practitioner making such re-examination may renew the certificate for a further period not exceeding twelve months or may suspend or revoke the said certificate.

21. A qualified medical practitioner who refuses to grant a certificate referred to in rule 17 or suspends or revokes an existing certificate under rule 20 shall state the reasons for refusing to grant a certificate or for suspending or revoking the certificate as the case may be. If the manager of the mine disagrees with the opinion of such medical practitioner, he may refer the case to the Chief Inspector or Inspector. The Chief Inspector or the Inspector shall refer the case for decision to a second qualified medical practitioner and such decision shall be final.

22. Every person who has been certified as fit for employment underground shall, before he is so employed, be provided by the manager with a metal token. Such token shall be stamped with the letter "P" and numbered. The number shall be the same as that of the certificate of fitness.

23. A record of every token so issued and the person to whom it was issued shall be maintained in the office of the mine.

6. In the rules for mines other than coal mines—

(*a*) For the existing Schedule A the following shall be substituted :—

Schedule A.

(*See* rule 9.)

Register of employees.

Name and caste of the employee.	Age.	Sex.	Nature of employment.	Date of commencement of employment.	Periods of work.		Intervals for rest to which he/she is entitled.		Days of rest to which he/she is entitled.	Relays* to which he/she belongs.
					Begins.	Ends.	Begins.	Ends.		
					a.m.	a.m.	a.m.	a.m.		
					p.m.	p.m.	p.m.	p.m.		

*In mines where work is carried on by a system of relays.

(*b*) For the existing Schedule B the following Schedule shall be substituted :—

Schedule B.

(*See* rule 9A.)

Notice of commencement and end of work.

Name of mine———————

Name of owner of mine———————

It is hereby notified that persons employed in this mine shall begin and end their periods of work between the hours set out below :—

Kind of worker.	1st relay.				2nd relay, if any.				3rd relay, if any.			
	Period of work.		Rest interval.		Period of work.		Rest interval.		Period of work.		Rest interval.	
	Begins.	Ends.	Begins.	Ends.	Begins.	Ends	Begins	Ends.	Begins.	Ends	Begins.	Ends.
	a.m.	a.m.	a.m.	a.m.	a.m.	a.m.	a.m.	a.m.	a.m.	a.m.	a.m.	a.m.
	p.m.	p.m.	p.m.	p.m.	p.m.	p.m.	p m.	p.m.	p.m.	p.m.	p.m.	p.m.

Note.—The words and letters not wanted should be scored out.

In the case of underground workers, the entry in the rest interval column will be nil.

(c) After Schedule B the following Schedule shall be inserted :—

Schedule C.

(*See* rule 17.)

Form of certificate of fitness for employment underground in a mine.

Counterfoil of certificate of fitness.	Certificate of fitness.
Serial No.	Serial No. .....
Date	Date .....
2. Name	This certificate unless renewed shall not be valid after.....*
3. Father's name	I hereby certify that I have personally examined (name)..... ....
4. Sex and caste or religion.....	son/daughter of..... .. (caste, etc.)..... .....
.....	residing at..... who is desirous of being employed in a mine and that his/her age as nearly as can be ascertained from my examination is..... years and that he/she is fit for employment underground in a mine as an adult. His/Her descriptive marks are..... .....
5. Residence	
6. Age certified	
7. Distinctive marks.....	
.....	....
Left thumb impression.	Left thumb impression.
....	.....
Qualified Medical Practitioner.	Qualified Medical Practitioner.
	Renewed till .....
	Date.....
	Signature of Qualified Medical Practitioner.

*Date twelve months after date of issue to be filled in by the Medical Practitioner.

No. 4338Com.—25th June 1936.—It is hereby notified for general information that a license described as the Chandpur Electric License, 1936, as set forth below, has been granted to Messrs. Chatterjee, Das and Company, Chandpur—

The Chandpur Electric License, 1936.

License for the supply of electrical energy granted by the Government of Bengal under the Indian Electricity Act, 1910.

License is hereby granted to Messrs. Chatterjee, Das and Company, a company having its registered office at Chandpur (Bengal), to supply electrical energy in the area with the powers and upon the terms and conditions specified below :—

Short title.

1. This license may be cited as " The Chandpur Electric License, 1936."

Interpretation.

2. The several words, terms and expressions to which by the Indian Electricity Act, 1910, or any statutory modifications thereof or by the rules thereunder, meanings are assigned, shall have in this license, the same respective meanings, provided that in this license—

(*a*) The " Act " shall mean the Indian Electricity Act, 1910, and any statutory modifications thereof.

(*b*) The expression " The Licensees " shall mean and include the said Messrs. Chatterjee, Das and Company, a company registered in India under the Indian Companies Act having their registered office at Chandpur (Tippera) and their permitted assigns.

(*c*) The expression " Deposited Map " shall mean the plan of the area of supply hereinafter specified which has been deposited with the Government of Bengal in pursuance of rules under the Act, which plan is signed for the purpose of identification by the Secretary to the Government of Bengal, in the Commerce Department and by the applicants, Messrs. Chatterjee, Das and Company.

(*d*) The term " Unit " shall mean the quantity of energy equivalent to a current of one thousand amperes flowing under an electromotive force of one volt during one hour.

Security.

3. The period within which under clause 1(*b*) of the Schedule to the Act the licensees shall deposit or secure such sum as therein mentioned, and the sum so to be deposited or secured shall, unless otherwise ordered by the Government under the clause, be six months from the notification of the license and Rs. 4,000 respectively.

Area of supply.

4. The area above referred to within which the supply of energy is authorised by this license (the area of supply under the Act) is the whole of the area with boundaries as follows :—

North—The northern boundary of the area of the Chandpur Municipality.

East—The eastern boundary of the said municipality.

South—The southern boundary of the same.

West—The river Meghna.

The boundaries whereof are delineated on the deposited map by a heavy red line.

Generating Station.

5. The licensees shall erect the generating station within the area covered by this license.

Compulsory works.

6. The works to be executed to the satisfaction of the Government under clause IV of the Schedule to the Act are the following, namely :—

(*a*) The licensees shall, within two years from the date of the license being granted, lay down or erect sufficient feeders and distributing mains and also execute works to the satisfaction of the Government of Bengal for the purpose of supplying electrical energy throughout the streets or parts of streets set out in the first annexure to this license, shall erect, or cause to be erected, the generating station mentioned in clause 5 with all machinery and apparatus necessary for the purpose of giving a continuous and efficient supply and shall do all other works necessary for the commencement of the supply of energy to consumers.

The licensees shall commence to execute the works aforesaid within six months from the commencement of the license and shall complete the same within two years from the commencement of the license.

(*b*) At the expiration of each successive period of three months from the commencement of the license until the completion of the compulsory works the licensees shall submit to the Secretary to the Government of Bengal in the Commerce Department reports specifying the steps taken and the progress made in carrying into effect this license.

Pressure and systems of supply.

7. The pressures and systems of supply shall be as follows :—

(*a*) Generation—Medium pressure, three-phase, 50 cycles, 440 volts, alternating current.

(*b*) Transmission—Three-phase, 4-wire, 50 cycles, alternating current at 440 volts between phases and 250 volts between a phase and neutral or, a high pressure three-phase, 50 cycles, alternating current at 3,300 volts between phases.

(*c*) Distribution—A three-phase, 4-wire, 50 cycles, alternating current at a declared pressure, at consumers' terminals, of 400 volts between phases and 230 volts between a phase and neutral. The pressures stated above shall be as measured at consumers' terminals and shall be uniform, within the limits prescribed by the Indian Electricity Rules, 1922, throughout the area of supply :

Provided always that it shall be lawful for the Government of Bengal from time to time to issue, with due regard to the expense involved and to the commercial prospects of the undertaking, regulations dealing with the above system of supply or to authorise other system or systems of supply to be adopted for the purpose of this license :

Provided also that the licensees may from time to time with the previous consent in writing of the Government of Bengal and subject to such limitations and conditions as shall be prescribed in writing by the Government, adopt any other system of supply for the purpose of this license.

Commencement of supply of energy.

8. (1) The supply of energy shall not be commenced until—

(*a*) The Electric Inspector to the Government of Bengal shall have inspected the licensees' works and certified in writing that the supply of energy may commence.

(*b*) The licensees' "Conditions of supply" shall have been approved by the Local Government.

(*c*) The amount of all miscellaneous charges incidental to or in connection with the supply to consumers and which the licensees propose to make against consumers shall have been so approved.

(2) The licensees shall not supply energy to any consumer or undertake work incidental to any such supply for a prospective consumer until—

(*a*) such prospective consumer shall have tendered to the licensees a requisition duly signed in the form for the time being approved by the Local Government, and

(*b*) such prospective consumer and the licensees shall have executed an agreement in a form approved or to be approved by the Local Government.

Accounts.

9. Separate and distinct accounts shall be kept by the licensees showing in full details as required by the Indian Electricity Act and Rules thereunder, the working of the electrical undertaking for which this license is granted.

Method of construction.

10. The feeders, distributing mains and service connections may be overhead or underground in whole or in part, and shall be erected, constructed, and maintained by the licensees in strict conformity with the Act, the rules thereunder and the following provisions :-

(*a*) The licensees shall not use overhead mains at any higher pressure than medium pressure without the sanction in writing of the Government of Bengal in each case and subject to such conditions or limitations as the Government of Bengal may impose.

(*b*) No conductor of an aerial line shall be at a less distance than four feet horizontally and/or eight feet vertically from any building or structure, whether permanent or temporary.

(*c*) In narrow lanes where it is not possible to maintain a horizontal clearance of four feet between the aerial lines and buildings or structures, underground cables shall be used or alternatively a special method of construction of aerial lines to be approved of in writing under section 18(*1*) of the Act.

Limits of price to be charged in respect of the supply of energy.

11. The prices to be charged by the licensees for energy supplied by them shall not exceed those stated in that behalf in the second annexure to this license or in the case of a method of charge approved by the Local Government in accordance with section 23, sub-sections (*3*) and (4) of the Act, such maximum as the Government may fix on approving the method.

Purchase of undertaking.

12. (*a*) The option of the purchase given by section 7 of the Act, shall be first exercisable on the expiration of 50 years from the date of notification of the grant of this license and thereafter on the expiration of every subsequent period of 20 years and the terms of such purchase shall be determined, in case of difference or dispute, by arbitration as provided by section 7 of the Act. The percentage to be added to the value on account of compulsory purchase in accordance with and for the purpose of the second proviso to sub-section (*1*) of section 7 shall be twenty per cent.

(*b*) In accordance with section 3, sub-section (*2*), clause (*d*) (*ii*) of the Act, it is hereby declared that the generating station to be used in connection with the undertaking shall form part of the undertaking for the purpose of purchase under section 5 or section 7, provided that the power station shall not have been abandoned by reason of the operation of clause 13.

(*c*) After notice shall have been given as prescribed in section 7(*4*) of the Act, all extensions and outlays of money debitable to the capital account of the licensees during the last two years of the period of such notice shall be subject to the previous approval of the Government.

Bulk supply.

13. Should a supply of electrical energy in bulk become available at any future date from any source at such rates that the net rates and other charges payable by consumers for the supply of distributed energy under this license could, in the opinion of Government, be reduced, the licensees shall obtain their supply from such source and shall also reduce the rates charged to consumers and also those referred to in clause 11 of this license by amounts which shall be approved by Government.

The decision of Government on the operation of this clause shall be final.

Variations from the Schedule to the Act.

14. (*a*) In pursuance of clause (*f*) of sub-section (*2*) of section 3 of the Act, it is hereby expressly declared that for the purpose of incorporation in this license, clause IV of the Schedule to the Act shall be varied by the substitution of "Two years" for the period of "Three years" specified in the same clause.

(*b*) In pursuance of clause (*f*) of sub-section (*2*) of section 3 of the Act, it is hereby expressly declared that—

The following sub-clause shall be substituted for clause VI, sub-clause (*5*), namely:—

> "Every requisition under this clause shall be in a form approved by the Local Government; and copies of the form shall be kept in the office of the licensees and supplied free of charge to any applicant."

(*c*) The following sub-clause shall be substituted for clause X, sub-clause (*2*), namely:—

> "Before commencing to supply energy through any distributing main the licensees shall give notice, by public advertisement in such manner as shall be previously approved by the Local Government, of the method by which they propose to charge for energy so supplied and the rates at which such energy will be supplied; and, where the licensees have given such notice, they shall not be entitled to change the method of charging or the rates at which energy will be supplied without giving notice thereof by public advertisement in the manner aforesaid and giving not less than one month's notice in writing or such shorter notice as the Local Government may deem proper of such change to the Local Government, to the local authority, if any, concerned, and to every consumer of energy who is supplied by them from such distributing main."

Securing continuity of supply.

15. It shall be the duty of the licensees (which expression shall for the purpose of this clause and clause 16 immediately following be taken to mean and include the licensees, their employees, servants and agents and their permitted assign) to give to the nearest Magistrate immediate and full information of any circumstances in which interruption of the supply may be apprehended as a result of civil commotion or disturbance of the public peace or any strike or lock-out of the nature specified in section 15 of the Trade Disputes Act, 1929.

Revocation.

16. (*a*) If the licensees shall in the opinion of the Local Government have failed to give such immediate and full information as is required by clause 15 hereof or if at any time any interruption of the supply shall occur which in the opinion of the Local Government is attributable to any wilful or preventable default or neglect on the part of the licensees or which in the opinion of the Local Government could by the exercise of reasonable care have been prevented by the licensees or if the licensees shall in the opinion of the Local Government, fail to comply with any of the provisions of the clauses of this license or shall in the opinion of the Local Government fail to show satisfactory progress during any portion of the period of two years specified in clause 6 of this license, or if the general direction and control of the license shall cease to be in the hands of British subjects, the license may be revoked.

(*b*) In the event of the Local Government revoking the license for any of the causes specified in this clause the security deposit of Rs. 4,000 made in accordance with clause 3 may in whole or in part be forfeited to the Local Government as the Local Government may decide and the decision of the Local Government as to both revocation and forfeiture shall be final and binding on the licensees.

First Annexure.

North bank of river Dakatia.

1. Comilla Road from Strand Road up to its junction with Bisundi Road.

2. Bisundi Road from New Market Road to the railway crossing.

3. New Market Road.

4. Strand Road.

5. Metal Road.

6. Bagadi Road up to the hospital.

7. Criminal Court Road.

South bank of river Dakatia.

1. Old Market Road.

2. Bazar Roads.

3. Mackertich Road.

4. Roy's Road up to R. Sim and Co.'s Feeder Road.

5. R. Sim and Co.'s Feeder Road.

Second Annexure.

Maximum charges.

(*a*) *For domestic purposes.*

I. Lighting :—

(*i*) Annas eight per unit metered, or

(*ii*) Rupee one and annas twelve per 20 watt. lamp per month and proportionately for the lamps of higher wattage, provided that total number of lamps installed does not exceed six and are not used for more than six hours during the 24 hours of the day.

II. Fans.—Annas seven per unit metered.

III. Flat rate for lights and fans combined—Annas seven and pies six per unit metered.

IV. Motors—

(*i*) For each installation having motors whose aggregate rated brake horse power does not exceed one B. H. P.—Annas seven per unit metered.

(*ii*) For each installation having motors in which the aggregate rated brake horse power exceeds one B. H. P.—Annas six per unit metered.

(*b*) *For industrial purposes.*

(*i*) For each installation having motors in which the aggregate rated brake horse power does not exceed four—Annas five per unit metered.

(*ii*) For each installation having motors in which the aggregate rated brake horse power exceeds four but does not exceed fifteen—Annas three and pies six per unit of energy metered *plus* rupees eight per month per rated B. H. P. of all the motors installed.

(*iii*) For each installation having motors in which the aggregate rated brake horse power exceeds fifteen —Annas three per unit of energy metered *plus* rupees eight per month per rated B. H. P. of all the motors installed.

(*c*) For heating, cooking, refrigerating and for all purposes other than those specified in sub-clauses (*a*) and (*b*)—Annas four per unit metered.

(*d*) In the case of a method of charge approved by the Local Government in accordance with section 23, sub-sections (*3*) and (*4*) of the Act, such maximum as the Government may fix on approving the matter.

E. N. BLANDY,

Secy. to the Govt. of Bengal.

PUBLIC WORKS DEPARTMENT.

Establishment.

NOTIFICATION.

Minister-in-charge: The Hon'ble Nawab Sir Mohiuddin Faroqui, Kt., of Ratanpur.

No. 11T.—19th June 1936.—Babu Subodh Chandra Ganguli, Assistant Engineer, Jalpaiguri Division, is allowed leave for six months, viz., leave on average pay for four months, on proper medical certificate, under the proviso to rule 81(*b*) (*ii*) of the Fundamental Rules, and leave on half average pay for the remaining period, under rule 81 (*d*) of those rules, in extension of the leave already granted to him by the Chief Engineer, Bengal, Public Works Department, in notification No. 2, dated the 4th January 1936.

H. S. E. STEVENS,

Secy. to the Govt. of Bengal.

DEPARTMENT OF AGRICULTURE AND INDUSTRIES.

Industries.

DARJEELING, THE 18TH JUNE 1936.

RESOLUTION—No. 373T.A.I.

Minister-in-charge: The Hon'ble Nawab Sir Mohiuddin Faroqui, Kt., of Ratanpur.

Read an application, dated the 20th October 1935, from Sheikh Hossain Ali of village Rambari, post office Shahzadpur, district Pabna, Secretary of the Shahzadpur Weaving School, Pabna, asking for a loan of Rs. 5,000 (subsequently reduced to Rs. 3,000) under section 19 (*1*) (*a*) of the Bengal State Aid to Industries Act, 1931 (Bengal Act III of 1931) for the purpose of developing his existing cotton weaving and dyeing factory at Shahzadpur.

Read also the resolution adopted at the meeting of the Board of Industries, Bengal, held on the 27th March 1936, as incorporated in the report of the Secretary to the Board in his letter No. 159B.I., dated the 5th June 1936.

Order.—Ordered that a loan of Rs. 3,000 be sanctioned on the security offered by the applicant and subject to the conditions noted below :—

(1) that a mortgage bond be executed by the applicant in the form prescribed by Government for the purpose ;

(2) that interest be charged at the rate of 6¼ per cent. per annum payable with each instalment on the balance of the unpaid principal ;

(3) that penal interest be charged at the rate of 8 per cent. per annum on any overdue instalment of repayment of the loan ; and

(4) that the entire amount of the loan with interest thereon be repaid in ten yearly equal instalments of Rs. 300 each *plus* interest, the first instalment being payable next year on the day and month in which it will be advanced this year.

Ordered also that the resolution be published in the *Calcutta Gazette*.

By order of the Govt. of Bengal

(Ministry of Industries),

H. S. E. STEVENS,

Secy. to the Govt. of Bengal.

Forests.

NOTIFICATIONS.

Silvicultural-Sundarbans Divisions. — No. 759-For.—20th June 1936.—Mr. V. S. Rao, Deputy Conservator of Forests, Range Officer, Southern Range, Silvicultural Division, is transferred to the Sundarbans Division as an attached officer, with headquarters at Khulna.

Sundarbans-Buxa Divisions.—No. 760For.—20th June 1936.—Mr. J. C. Nath, Deputy Conservator of Forests, attached to the Sundarbans Division, is transferred to the Buxa Division, and posted to the charge of the Rajabhatkhawa Forests Subdivision, with headquarters at Rajabhatkhawa.

H. S. E. STEVENS,

Secy. to the Govt. of Bengal.

REVENUE DEPARTMENT.

Land Revenue.

NOTIFICATIONS.

No. 9187L.R.—26th June 1936.—In exercise of the power conferred by section 55 of the Bengal Agricultural Debtors Act, 1935 (Bengal Act VII of 1936), the Governor in Council is pleased to make the following rules, namely :—

The Bengal Agricultural Debtors Rules, 1936.

Short title.

1. These rules may be called the Bengal Agricultural Debtors Rules, 1936.

Definitions.

2. In these rules, unless there is anything repugnant in the subject or context,—

(*1*) "Central Society" means a Central Society as defined in the rules made under section 43 of the Co-operative Societies Act, 1912 ;

(*2*) "co-operative society" means a co-operative society registered under the Co-operative Societies Act, 1912 ;

(*3*) "Form" means a Form appended to these rules ;

(*4*) "presiding member" means a member of a Board presiding over its sittings in the absence of the Chairman under rule 5 (*2*) ;

(*5*) "section" means a section of the Act ;

(*6*) "Special Appellate Officer" means an appellate officer competent to hear appeals against orders under sub-section (*2*) of section 13, section 18, clause (*b*) of sub-section (*1*) of section 19, section 21, section 22 or section 29, and "Ordinary Appellate Officer" means any other appellate officer ;

(*7*) "Special Board" means a Board empowered by a notification under section 7 to exercise powers under clause (*b*) of sub-section (*1*) of section 19, section 21 or sub-section (*1*) of section 22, and "Ordinary Board" means a Board not so empowered ; and

(*8*) "the Act" means the Bengal Agricultural Debtors Act 1935.

Establishment of Board.

3. When a notification establishing a Debt Settlement Board for any local area has been published under section 3, the Collector shall—

(*i*) pass an order fixing a time and place for the first meeting of the Board,

(*ii*) forward copies of the notification and the order to the Chairman and members of Board, and

(*iii*) cause the substance of the notification and of the order to be published within the local area.

General rules of procedure.

4. The quorum necessary for a meeting of the Board for the transaction of business shall be two if the Board is composed of three members and three if the Board is composed of more than three members ;

Provided that the presence of the Chairman shall be necessary for constituting a quorum of a Special Board.

5. (*1*) The Chairman shall preside at every sitting of the Board at which he is present.

(*2*) If the Chairman is not present at any sitting of an ordinary Board, another member shall preside : and the Collector may decide the order of precedence in which members shall so preside.

6. The Board may sit at such place as may be appointed by the Collector as its headquarters or, subject to any restrictions that may be imposed by him, at any other place within its jurisdiction which it may find convenient for the conduct of its business.

7. The Board shall sit at such times as it may fix, and may adjourn the proceedings relating to any application for such period and (subject to rule 6) to such place as it may consider advisable for the better conduct of such proceedings.

The time and place to which the proceedings are adjourned shall be announced to those present.

8. The proceedings regarding any application shall normally be in public. If for any reasons they are not so conducted a note of those reasons shall be made in the order-sheet.

9. A note shall be made in the order-sheet, and signed by the Chairman or the presiding member, of every order passed during the proceedings, and of the date and place at which the proceedings are held or to which they are adjourned.

10. The Chairman or the presiding member shall sign, date and seal with the seal of the Board every notice, process, award, certificate or requisition made or issued by it and every order issued by it in Form VII or Form XVII

11. The language of the Board and of all its records and registers shall be Bengali.

Record of evidence.

12. No record shall in general be kept of evidence given before an Ordinary Board but such Board shall make a summary of any conclusions regarding facts upon which it has heard evidence, and the Chairman or presiding member shall sign such summary.

13. The Chairman of a Special Board shall make and sign a brief memorandum of the substance of the evidence given by any party or any witness.

Applications under section 8.

14. An application made under sub-section (*1*) of section 8 by—

(*a*) an individual debtor or

(*b*) persons whose property and debts are joint

shall be in Form I.

15. An application made under sub-section (*2*) of section 8 by a creditor shall be in Form II.

16. An application by debtors or other persons whose property is not joint and who apply jointly under sub-section (*1*) of section 9 for the settlement of a joint debt shall be in Form III.

17. Every application shall be signed on the last page by each applicant or on his behalf by the agent who is permitted to present the application under rule 18.

18. An application shall be presented to the Chairman or any other member of the Board, at any time during a sitting of the Board, by the applicant in person or, subject to rules 92 to 101 by an agent who represents him.

19. (*1*) The Board shall not accept any application which does not bear such court-fee stamps as is prescribed by any rule made under the Act.

(*2*) When an application is accepted the Chairman or presiding member shall cancel the court-fee stamp which it bears by sealing it with the seal of the Board and writing his signature, with the date, across the stamp and upon the paper on either side of the stamp.

20. Every application shall be verified in the presence of the Chairman or other member of the Board by the applicant or one of the applicants, or by the agent who presents the application under rule 18.

21. (*1*) Every application shall be made the basis of proceedings and shall be entered in the prescribed case Register of applications.

(*2*) An order-sheet in the form fixed for revenue cases shall be attached to every application received.

22. When an application is made under sub-section (*1*) or (*2*) of section 8 to a Special Board by or relating to a debtor ordinarily resident in an area for which an Ordinary Board also has been established, such Special Board shall submit the application to the Collector with a view to its transference to the Ordinary Board for action under section 12.

23. Any member of the Board may examine the applicant or person submitting a statement of debt in order to satisfy himself of the accuracy of the information contained in it, and may call for additional information in order to complete such application or statement.

24. If it appears from an application under section 8 or from a statement under sub-section (*1*) of section 13 that the debtor is a member of and owes any amount to any co-operative society, and if the Board has received information as to the central society of which such co-operative society is a member the Board shall issue to such central society a notice in Form IV.

Notice under section 12 (2).

25. A notice under sub-section (*2*) of section 12 shall be in Form V.

26. Notice under sub-section (*2*) of section 12 may be given in any of the following ways at the discretion of the Board :—

(*a*) If the person to whom it is to be given is present while the Board is sitting, the Chairman or the presiding member may give him verbal information of the substance of the notice and record in the order-sheet a note that this has been done ;

(*b*) A copy of the notice may be sent by post under a certificate of posting ; or

(*c*) A copy of the notice may be served in the manner provided in clause (*2*) of rule 28.

Notice under section 13 (1).

27. A notice to a debtor or creditor or a general notice under sub-section (*1*) of section 13 shall be in Form VI.

28. A notice under sub-section (*1*) of section 13 may be served in any of the following ways at the discretion of the Board :—

(*1*) If the person on whom it is to be served is present while the Board is sitting, the Chairman or the presiding member may tender or deliver to him the notice and record in the order-sheet a note that this has been done ;

(*2*) A copy of the notice—

(*a*) may be made over to the applicant for service to be effected by or on behalf of such applicant by delivering such copy to the person to whom it is addressed and obtaining his signature or thumb impression on a duplicate copy by way of receipt, or

(*b*) may be served by an officer or servant of the Board, or

(*c*) may be sent by registered post with acknowledgment due, if the person to whom it is addressed is resident in another district, or

(*d*) may be served through the Union Board within whose jurisdiction the person concerned resides in the manner laid down in the rules for service of processes by Dafadars and Chaukidars under the Bengal Village Self-Government Act, 1919, or

(*e*) if the person to whom it is addressed is resident in a locality where there is no Union Board, may be sent to the Subdivisional Officer for service in the manner fixed for revenue processes.

29. Service under rule 28 (*2*) (*b*) may be effected in the manner laid down in rule 179 of the Bengal Practice and Procedure Manual, 1934.

30. A general notice issued under sub-section (*1*) of section 13 shall be posted up conspicuously at the office of the Board, at the office of the Union Board (if any), at the Sub-Registrar's office, and in the village where the debtor ordinarily resides.

Form of statements of debt under section 13 (1).

31. Form I with necessary alterations shall be used for statements of debt to be submitted by debtors under sub-section (*1*) of section 13.

32. Every person who joins in making an application in Form III shall submit a statement of debt in Form I with necessary alterations.

33. Form II with necessary alterations shall be used for statements of debt to be submitted by creditors under sub-section (*1*) of section 13.

34. Persons whose property is joint may submit a joint statement of debt.

Order under section 13 (2).

35. An order under sub-section (*2*) of section 13 shall be in Form VII.

Recovery of costs from a debtor [section 13 (3)].

36. An order by a Board allowing costs against a debtor under sub-section (*3*) of section 13 shall be recorded in writing on the order-sheet, and

a copy of the order signed by the Chairman or presiding member and sealed with the seal of the Board, shall be given to the creditor who made the application under section 8.

37. (*1*) Application for the recovery of costs shall not be made by the creditor to the Certificate-officer within 40 days of the passing of the order by the Board, but must be made within 70 days of the passing of the said order or, if there is an appeal, within 30 days of the passing of orders by the Appellate Officer

(*2*) A creditor making such application shall produce before the Certificate-officer the copy of the order of the Board which has been given to him under rule 36.

Production of documents (section 14).

38. A list of the documents produced by a creditor under sub-section (*1*) of section 14 shall be filed by him with such documents.

39. The creditor shall give on every copy of a document produced by him a signed certificate that it is a true copy.

40. The Chairman of the Board or the presiding member shall sign, date and seal with the seal of the Board each document and the true copy of it, after the correctness of the copy has been verified to his satisfaction.

41. If it is not possible to verify the copy of a document on the day when it is produced, the Board shall return the document and the copy of it to the creditor who shall again produce them on a subsequent date to be fixed by the Board.

Witnesses, etc. (section 16).

42. The parties shall ordinarily bring their own witnesses.

43. When a witness residing at a distance of over 5 miles from the place at which he is required to attend is summoned to appear before a Board the person at whose instance he is summoned shall be required to deposit in advance with the Board (*a*) diet allowance and (*b*) travelling allowance to be fixed by the Board according to the following scales : –

A Scale of Diet Allowance.

I. Labourers, small cultivators, artisans, petty traders and others in a similar condition of life.	4 annas to 8 annas per head per diem.
II. Witnesses of better class including ordinary landowners, persons belonging to the lower middle class, clerks or assistants, men of business, professional men and the like.	9 annas to 12 annas per head per diem.
III. Witnesses of high class, including large landowners, persons enjoying substantial pay, professional men of high position and the like.	Re. 1 to Rs. 2-8 per head per diem.

Explanation. – In every case the Board should consider local conditions and the circumstances of the individual and grant a reduced allowance if the actual expenses are likely to fall short of the scale.

B—Scale of Travelling Allowance.

I.	If the witness can reasonably be expected to perform the journey on foot.	Nil.
II.	Otherwise, (*a*) when the journey is wholly or partly by rail, steamer or public motor service.	Actual fare each way according to the class by which persons of his station in life would ordinarily travel.
	(*b*) When the journey is by any other kind of conveyance by road.	Actual reasonable conveyance charge up to a maximum of 4 annas a mile.
	(*c*) Where the usual mode of travelling is by water.	Actual reasonable boat hire up to a maximum of Rs. 2 per day.

Explanation.—The Board should in every case consider local conditions and the class to which the witness belongs, and should reduce the allowances to the actual amounts likely to be incurred.

III.	In addition to the above where ferries have to be crossed.	The authorised charges for tolls.

44. A summons shall be in Form VIII.

45. A summons shall specify whether the person summoned is to give evidence or produce a document or to do both : it shall state the time and place at which he is required to attend and shall describe with reasonable accuracy any document which such person is called upon to produce.

46. A summons may be served in any of the ways specified in rule 28.

47. Any person who is not required by a summons to attend in person to produce a document shall be deemed to have complied with the summons if he causes such document to be produced instead of attending personally to produce it.

48. If any person fails to comply with a summons the Board may, if it so desires, proceed in the manner laid down in Order XVI of the Code of Civil Procedure, 1908.

49. The exercise by the Board of the following powers under Order XVI of the Code of Civil Procedure, 1908, shall be subject to the prior sanction of the Collector :—

(*a*) the issue of warrants of arrest ;

(*b*) proclamation and attachment of property ; and

(*c*) the imposition of fines.

Determination of principal and interest of a debt [section 18 (2)].

50. (*1*) For the purpose of sub-section (*2*) of section 18, the Board shall determine as the principal due from the debtor at the time of such determination (*a*) the amount shown as principal in any bond relating to the debt less any amount which the Board finds to have been paid in reduction of principal, or (*b*) the amount which the Board finds to have been the amount of the loan taken by the debtor less any amount paid in reduction thereof.

(*2*) The Board shall calculate the interest payable from the date of the bond or, if there is no bond, from the date on which the Board finds the loan to have been taken, and shall take into account all payments which it finds to have been made by the debtor on account of interest.

(*3*) If there has been a decree of a civil court relating to any debt the Board shall note what portion of the amount decreed represents costs.

Amicable settlements and orders under section 19(1).

51. (*1*) The Board shall not embody in writing any proposed amicable settlement which is likely to prejudice the payment of arrears of rent due to the landlord of the debtor, or to operate unfairly to the disadvantage of any creditor or debtor.

(*2*) When deciding whether an amicable settlement, or an offer made by a debtor, is fair the Board may take into account the amount which it finds to have been actually received as a loan even though it be less than the amount shown in a bond to have been received by the debtor, and shall have regard to the provisions of the Bengal Money-lenders Act, 1933.

52. (*1*) If some but not all the dedts of a debtor are settled under section 19, an order of dismissal under sub-section (*1*) of section 17 as regards any debt not settled shall not be passed until the award regarding the debts which have been settled under section 19 has been signed.

(*2*) If an Ordinary Board decides to submit a recommendation under rule 78 for the transfer of an application to a Special Board, it shall not make an award or pass an order of dismissal under sub-section (*1*) of section 17 regarding any debt of the debtor to whom such application relates unless the Collector refuses to transfer the application.

Report to Assistant Registrar of Co-operative Societies.

53. (*1*) If the debtor is a member of, and owes any amount to, a co-operative society, the Board shall not embody in writing any amicable settlement under clause (*a*) of sub-section (*1*) of section 19 or pass any order under clause (*b*) of that sub-section or under section 22, until it has obtained in writing the approval of the authority specified in rule 72.

(*2*) To enable such approval to be obtained, the Board shall forward to the Assistant Registrar of Co-operative Societies for the area in which the Board is constituted a report regarding the terms of the proposed amicable settlement or order, and shall supply to him all the particulars specified in clauses (*c*), (*d*) and (*e*) of sub-section (*1*) of section 25.

Certificate under section 21.

54. A certificate under section 21 shall be in Form IX.

Sale of insolvent's property under section 22(2).

55. (*1*) When a Board has passed an order under clause (*b*) of sub-section (*1*) of section 22 and embodied it in an award, it shall send to the Certificate-officer a requisition in Form X together with a copy of the award.

(*2*) The Certificate-officer, on receipt of the requisition from the Board, shall take steps to sell the property of which the sale has been ordered by the Board, but shall not actually sell it until the expiry of 40 days from the date of the order of the Board under sub-section (*1*) of section 22.

(*3*) When the Certificate-officer has sold the property, he shall report the fact to the Board which shall make an order of discharge under sub-section (*5*) of section 22.

56. (*1*) When the property of an insolvent debtor is sold in consequence of an order passed under clause (*b*) of sub-section (*1*) of section 22 the proceeds of the sale shall, subject to the following provisions of this rule, be utilised towards the payment of his debts in the manner specified in section 29.

(*2*) If there is a mortgage, lien or charge on any portion of the property exempted from sale under the provisions of sub-section (*4*) of section 22 or of section 24 the proceeds of the sale of any immovable property on which there is no mortgage, lien or charge shall (subject to the provisions of sub-section (*1*) of section 29) be utilised first for the payment of any debt secured by the mortgage, lien or charge on the exempted portion to the extent of the estimated value of such portion, and, if there is any surplus after payment of such debt, for the payment of the insolvent's debts in general.

(*3*) If the amount of the sale proceeds referred to in sub-rule (*2*) is not sufficient to pay the debt, which is secured by the mortgage, lien or charge on the exempted portion, to the extent of the estimated value of such portion, the proceeds of the sale of any immovable property on which there is a mortgage, lien or charge shall be utilised in proportionate parts for the payment of—

(*a*) the debt secured by the mortgage, lien or charge on the property sold, and

(*b*) the difference between the estimated value of the said exempted portion and the amount of the sale proceeds of the property on which there is no mortgage, lien or charge :

Provided that if more than one debt is secured by a mortgage, lien or charge on the immovable property sold the Certificate-officer shall refer the matter to the Board, and the Board shall, by a further order, give such directions as it may consider fair and reasonable for such proportionate utilisation of the sale proceeds of the property on which there is any mortgage, lien or charge.

57. In rule 56 " the estimated value " of the exempted portion of the property means the value of that portion as estimated by the Certificate-officer on the basis of the amounts realised by the sale of the other property of the insolvent.

Certificate of discharge under section 22(5).

58. A certificate of discharge under sub-section (*5*) of section 22 shall be in Form XI.

Determination of insolvent's dwelling house under section 24(1).

59. The Board shall determine in the following manner what portion of an insolvent debtor's property shall be deemed to be his dwelling house for the purposes of the Act :—

(*a*) It shall ascertain what members of his family reside with him, and shall determine what accommodation is necessary for them, having regard to the standard of living that is considered normal in the locality for a cultivator holding one acre of land ;

(*b*) It shall, after an inspection by one or more of its members, decide whether the insolvent's homestead provides more than such necessary accommodation or includes more land than is required for it ; and, if there is more such accommodation or more such land, it shall set aside out of the homestead a compact area with such buildings as in its opinion will provide that accommodation ;

(*c*) Such compact area shall include the sites and plinths of the buildings upon it together with such other land and such means of approach as the Board considers reasonable for the proper enjoyment of the buildings, and may include a tank or pond or portion thereof if the Board considers this to be necessary in the circumstances ; but (so far as may be practicable) it shall not include garden or orchard land ;

(*d*) It shall consider any representations that may be made by the insolvent or any creditor on any relevant point before coming to a decision ;

(*e*) It shall embody its decision in a written order describing the compact area set aside by it and the buildings upon that area and declaring them to be the dwelling house of the insolvent for the purposes of the Act.

Exemption from sale of insolvent's movable property under section 24 (3).

60. The following movable property of an insolvent debtor shall be exempt from sale under sub-section (*3*) of section 24, viz.—

(*a*) the necessary wearing apparel, cooking vessels, beds and bedding of the insolvent and of his wife and children and such personal ornaments as, in accordance with religious usage, cannot be parted with by any woman ;

(*b*) one pair of bullocks and such implements of husbandry and such seed grain as may, in the opinion of the Certificate-officer, be necessary to enable the insolvent to earn his livelihood as a cultivator ;

(*c*) such agricultural produce as may appear to the Certificate-officer to be necessary for the purpose of providing until the next harvest for the support of the insolvent and his family.

Form of award [section 25 (1)].

61. An award in respect of an insolvent debtor shall be in Form XIII or Form XIV, as the case may be, and any other award shall be in Form XII.

Notice under section 25 (2).

62. Notice under sub-section (*2*) of section 25 may be given in any of the ways specified in rule 28.

Application under section 28 (1).

63. An application by a creditor under sub-section (*1*) of section 28 for the recovery of an amount payable under an award shall be made—

(*a*) within 60 days of the date when the amount was payable, or within 30 days of the date of an order by a Certificate-officer rejecting an application by a debtor for time under sub-section (*2*) of such section, whichever is later, or

(*b*) within 60 days of the date fixed for payment by the Certificate-officer, if time is allowed by him under sub-section (*2*) of such section on an application under rule 65.

64. A creditor who applies for the recovery of an amount under sub-section (*1*) of section 28 shall give the following particulars in the appropriate column of a requisition under section 5 of the Bengal Public Demands Recovery Act, 1913 :—

(*a*) the number and year of the proceedings in which the award was made, the date of the award and the name of the Board making the award ;

(*b*) the time at which the amount which the debtor has failed to pay was payable.

Grant of time under section 28 (2).

65. (*1*) A debtor who is unable to pay an amount payable under an award by the date fixed therein may make an application to the Certificate-officer for time to be allowed within which to pay such amount.

(*2*) Such application shall give the following particulars :—

(*a*) the number and year of the proceedings in which the award was made, the date of the award and the name of the Board making the award ;

(*b*) the amount which the debtor is unable to pay and the time at which it is or was payable ;

(*c*) the name and address of the creditor to whom such amount is payable ;

(*d*) the reasons owing to which the debtor is unable to pay the amount.

(*3*) Such application shall be signed by the applicant or, with the permission of the Certificate-officer, by an agent on his behalf and shall be verified by such applicant or agent who shall present it in person to the Certificate-officer. In deciding whether to give or to withhold such permission the Certificate-officer shall be guided by the principles laid down in rules 92 to 101.

(*4*) The Certificate-officer may reject such application after hearing the applicant or his agent.

(5) If the Certificate-officer does not reject the application, he shall give notice to the creditor to whom such amount is payable of the date on which he will consider the application.

(6) On the date so fixed or on such other date as may, for reasons to be given in writing, be convenient the Certificate-officer, after hearing any evidence that he may consider necessary and considering any representation by the creditor, shall pass such orders upon the application as he thinks fit.

66. In deciding whether time should be allowed whether on an application under rule 65 or in proceedings under the Bengal Public Demands Recovery Act, 1913, the Certificate-officer shall take into consideration such factors as the following :—

(a) whether the debtor or any earning member of his family has suffered from any sickness or injury which has made it impossible for the debtor properly to cultivate his land or has otherwise affected his earnings ;

(b) whether there has been a total or partial failure of crops owing to such causes as flood, cyclone, drought, or damage by insects or blight ;

(c) whether the debtor has suffered from any other exceptional disaster such as serious loss by fire or theft, or loss of cattle needed for cultivation owing to accident or disease.

67. If it appears unlikely that under normal circumstances the debtor will be able to pay during the next year, in addition to any other amount then payable under the award, the amount which he cannot pay during the current year, the Certificate-officer shall issue to any other creditor to whom an amount is payable under the award a notice specifying a date on which such creditor will be given an opportunity for making an objection, and may take further evidence before passing an order that time will be given to the debtor for paying any amount to such creditor.

68. A notice under rule 65(5) or rule 67 may be issued by ordinary post.

Distribution of sale proceeds by Certificate-officer (section 29).

69. (1) When a Certificate-officer has sold the property of a debtor under sub-section (2) of section 22 or under section 28, he shall fix a date on which he will determine the amounts payable from the proceeds under sub-section (1) of section 29. Such date shall be not less than 40 days after the date of the award.

(2) The Certificate-officer shall then ascertain whether any amount is due to the Local Government from the debtor and has been included in a certificate issued under the Bengal Public Demands Recovery Act, 1913, and shall issue notices to—

(a) the landlord calling upon him to state what arrears of rent have fallen due between the date of the determination of the debt under sub-section (2) of section 18 and the date of confirmation of the sale and to produce evidence in support of his claim on the fixed date ;

(*b*) the creditors whose names are given in the award informing them that a distribution is to be made of the proceeds of the sale and that the amounts payable under sub-section (*1*) of section 29 will be determined on the fixed date, and calling upon them to submit on that date any claims regarding the amounts due to them and the order of priority in which they are payable ; and

(*c*) the debtor informing him that the amounts payable under sub-section (*1*) of section 29 will be determined on the fixed date and that any representation then made by him regarding such amounts will be considered.

(*3*) The Certificate-officer may pass orders on the date fixed or on any other date to which he thinks fit to postpone the proceedings.

70. A notice under rule 69 may be issued by ordinary post.

71. Copies of the notice issued to the creditors shall be conspicuously displayed outside the courts of the Certificate-officer and of the Munsif having jurisdiction in the area within which the debtor ordinarily resides.

Settlement of debts of member of co-operative society (section 31).

72. The authority whose previous approval is necessary under section 31 shall be either—

(*a*) the Registrar of Co-operative Societies, or

(*b*) subject to such restrictions as the Registrar may direct by general or special order, a Deputy Registrar or Assistant Registrar of Co-operative Societies.

Notice to Court under section 34.

73. Notice shall be given by a Board to a Court under section 34 in Form XV.

Notice to Board of application for execution [section 35 (ii)].

74. Any person who has applied for execution of a decree or certificate for the recovery of arrears of rent which have become due from a debtor after the date of an application under section 8 shall submit in duplicate a notice in Form XVI to the Chairman of the Board which made the award regarding such application or before which such application is still pending, and the Chairman shall forward such notice to the Court or Certificate-officer concerned with his endorsement.

Attachment of debtor's immovable property under section 37.

75. (*1*) The attachment of immovable property under section 37 shall be made by an order prohibiting the debtor from transferring or charging such property in any way and all other persons from taking any benefit from such transfer or charge.

(*2*) The order shall be proclaimed by beat of drum, or in some other customary manner, at some place on or near to such property, and a copy

of it shall be posted up conspicuously on the property or in a place near to it, at the office of the Board, at the Sub-Registrar's office, and at the court of the Munsif within whose jurisdiction such property lies.

(3) Where within six months of the proclamation under sub-rule (2) any person objects to the attachment of property attached under section 37 on the ground that such property belongs to him, the Board shall make a summary investigation of the objection.

(4) If the Board is satisfied after investigation that the objection is well-founded, it shall make an order releasing the property from attachment wholly or to such extent as it thinks fit; otherwise it shall reject the objection.

76. An appeal against any order under rule 75 shall be made to a Special Appellate Officer.

77. The order of attachment shall be in Form XVII; the notice to the officers in whose offices the order of attachment is to be published shall be in Form XVIII; and the notice to such officers of the withdrawal from attachment shall be in Form XIX.

Transfer of applications under section 39.

78. If an Ordinary Board, after using its best endeavours to bring about an amicable settlement of debt, considers—

(i) that any creditor has unreasonably refused a fair offer made by a debtor and that action should be taken under clause (*b*) of sub-section (*1*) of section 19 or under section 21, or

(ii) that the debtor should be declared an insolvent under section 22,

it shall submit to the Collector a report on the facts and a recommendation as to the action to be taken:

Provided that no recommendation for declaring a debtor insolvent shall be so submitted unless there is a Special Board, empowered under sub-section (*1*) of section 22, for the area within which such debtor ordinarily resides.

79. On receipt of a report and a recommendation from a Board under rule 78 and after such inquiry, if any, as he thinks fit the Collector, if so authorised under section 39, may transfer the application to which they relate to the Special Board for disposal, and if he refuses so to transfer the application the Board shall dismiss the application either as a whole or so far as it relates to a particular debt covered by the recommendation.

80. If any Board not empowered under section 7 to exercise powers under sub-section (2) of section 9 or sub-section (2) of section 13 considers that action should be taken under either or both of those sub-sections in regard to any application which is pending before it, it may submit a report and a recommendation to the Collector,

and the Collector, if so authorised under section 39, may transfer the application to a Board which has been empowered under section 7 to exercise the appropriate power.

Appeals (section 40).

81. A Special Appellate Officer shall be an officer of a rank not below that of a Munsif or Deputy Collector.

82. The experience required for a Special Appellate Officer shall be—

(*a*) in the case of officers belonging to the Indian Civil Service such training as is usual before appointment as a District Judge; and

(*b*) in the case of other officers two years spent in training for or working in a post as a civil judicial officer.

83. An appeal from an Ordinary Board shall be made to the Ordinary Appellate Officer appointed for the local area unless it is an appeal which, under the proviso to sub-section (*1*) of section 40 or under any rule, lies to a Special Appellate Officer only.

84. If an appeal which he is not competent to hear is presented to any Ordinary Appellate Officer, he shall refer the appellant to the appropriate Special Appellate Officer.

85. (*1*) Every appeal shall be preferred in the form of a memorandum signed by the appellant, by a person who has represented him before the Board, by his pleader or by his Revenue Agent and presented to the appellate officer.

(*2*) The memorandum shall give (*a*) the names and addresses of the appellant and the opposite party, (*b*) the number and year of the proceedings and the name of the Board concerned, and (*c*) the gist of any order or decision to which objection is taken; and it shall set forth concisely and under distinct heads the grounds of appeal without any argument or narrative.

(*3*) The memorandum shall be written in a fair and legible hand, or be typewritten, on foolscap water-marked paper known as "pie" or "cartridge" or "demi" paper, obtainable from the Treasury and sold by all licensed stamp vendors, on one side of the paper only.

86. If the appellate officer so directs, the appellant shall file a copy of the order or decision to which he makes objection.

87. A memorandum of appeal not drawn up in the manner prescribed may be rejected or returned to the appellant for amendment then and there or within a time fixed by the appellate officer. A memorandum thus amended shall be signed or initialled by the appellate officer.

88. When an appellate officer rejects an appeal he shall record his reasons.

89. Where there are several persons who have a common ground for objection against an order or decision of a Board or Certificate-officer any one of such persons may appeal and the appellate officer may make his order applicable to the case of all such persons.

90. Unless the appellate officer for sufficient reason directs otherwise, the proceedings of the Board or Certificate-officer shall not be stayed because any of the persons concerned has preferred an appeal.

91. The District Judge and the Collector of the Districts respectively shall control and inspect the work of Special Appellate Officers and Ordinary Appellate Officers.

Representation of a party before a Board (section 46).

92. An agent, such as a *naib* or *gomoshta*, who normally collects or supervises the collection of a landlord's rents within the area where the debtor resides, or who is authorised by such landlord to come to a settlement with a debtor regarding any payments to be made on account of arrears of rent, may represent such landlord in any proceedings regarding such arrears before a Board without its permission, even if he be a legal practitioner.

93. A recognised agent who normally transacts the money-lending business of any creditor and who is authorised to come to a settlement on behalf of the creditor regarding any payments to be made on account of any debt by a debtor, may represent such creditor in any proceedings before a Board without its permission, even if he be a legal practitioner.

94. When there are several debtors jointly liable for a debt which is the subject matter of proceedings before a Board, or when there are several creditors jointly claiming amounts in respect of a debt which is the subject matter of such proceedings, the Board shall allow any of such debtors or any of such creditors respectively to represent any of the others who has authorised him to this effect, even if he be a legal practitioner.

95. Any debtor or creditor who is a minor or of unsound mind may be represented by a person appointed, or declared, to be his guardian by a competent authority or recognised by the Board as his lawful guardian, even if such guardian be a legal practitioner, and the permission of the Board shall not be necessary.

96. If the Board is satisfied that a debtor or creditor—

(*a*) is unable to appear in person before it owing to bodily infirmity or illness or any other good cause, or

(*b*) is a woman and is unwilling so to appear,

the Board shall allow such debtor or creditor to be represented by an agent duly authorised by him or her in this behalf:

Provided that no agent may be thus authorised whom the Board considers to be an unsuitable person.

97. A legal practitioner related to a debtor or creditor to whom permission to be represented by an agent has been granted under rule 96 may represent such debtor or creditor if such debtor or creditor has no nearer adult male relative, of competent mind and body, able to represent him,

and may, for adequate reasons, be permitted by the Board so to appear even though such debtor or creditor has such a nearer male relative.

98. If a creditor or an authorised agent of a creditor is a legal practitioner and appears before the Board the debtor may be represented by any legal practitioner whom he may appoint, and the permission of the Board shall not be necessary.

99. A Board shall not unreasonably refuse to any party permission to be represented by an agent.

100. If the Board is satisfied that the interests of a guardian or authorised agent are adverse to those of the debtor or creditor whom he represents or that he is not adequately protecting the interests of such debtor or creditor, it may by an order declare him incompetent further to represent such debtor or creditor.

The Board shall forthwith send to the Collector a copy of any such order.

101. Subject to rule 95, and notwithstanding the provisions of any other rule, no person who has been proclaimed as a tout under section 36 of the Legal Practitioners Act, 1879, shall be permitted to represent any debtor or creditor under any of these rules unless he is related to such debtor or creditor and such debtor or creditor has no nearer competent adult male relative.

102. If the debtor is a member of, and owes any amount to, a co-operative society, it shall be lawful for—

(*a*) an officer of the Co-operative Department not below the rank of auditor, or

(*b*) an employee of any central society of which such co-operative society is a member,

to appear before the Board, and any representation made by such officer or employee regarding the debt due to the co-operative society shall be considered by the Board.

Registration of an award or certificate under section 47.

103. (*1*) When an award is signed under section 25 or when a certificate is granted under section 21 or sub-section (*5*) of section 22—

(*a*) if there is no appeal, the Chairman of the Board shall, as soon as possible after the expiry of 40 days from the date of such award or certificate, send it to the Sub-Registrar for registration ; and

(*b*) if there is an appeal and if the appellate officer does not set aside such award or certificate, he shall, as soon as possible after disposing of the appeal, forward such award or certificate to the Sub-Registrar for registration, and, if the appellate officer has modified the terms of such award or certificate, he shall correct it accordingly before fowarding it to the Sub-Registrar.

(*2*) The Sub-Registrar shall register such award or certificate in the manner provided in the Indian Registration Act, 1908, and shall then send it to the Subdivisional or Collectorate Record Room, as the case may be.

Publication under section 48 of order or award.

104. A copy of any award shall be published by hanging in the Court of the Munsif having jurisdiction in the area for which the Board was established,

and a notice that such copy has been thus published shall be posted in the offices of the Board, of the Sub-Registrar and of the Collector of the district.

105. Copies of any order made under sub-section (*2*) of section 13 shall be published by hanging in the offices of the Board, the Sub-Registrar and the Collector of the district, and in the court of the Munsif having jurisdiction in the area for which the Board was established.

Assignment of amount payable under an award (section 53).

106. (*1*) The assignment of a right to receive any amount payable under an award shall be effected by an instrument in writing, signed by the assignor or his duly authorised agent, and shall be subject to such stamp duty as is payable for assignment of a debt of similar amount.

(2) The assignee shall take the assignment subject to all equities and defences available against the assignor at the time, even though he may have no notice of them.

(3) It will be open to the assignee to serve a notice of the assignment upon the debtor, and unless such notice is given, or the debtor is a party to or aware of the assignment, any dealing by him in respect of such debt shall be valid against such assignment.

Validity of notices.

107. No notice shall be deemed to be void on account of any error in the name or designation of any person referred to therein unless such error has produced substantial injustice.

Allowances to a Chairman and other members of a Special Board.

108. (1) A Chairman or other member of a Special Board, if a non-official, may draw travelling allowance for any journey performed by him—

(a) from his residence for the purpose of attending a sitting of the Board, or

(b) subject to any restrictions imposed by the Collector, for any other purpose in connection with his duties as such Chairman or member

at the rates admissible, and subject to the conditions applicable, to a Government servant of the second grade, and may, subject to the like restrictions and conditions, draw daily allowance at the rate of Rs 3.

(2) Such Chairman or member, if an official, may draw for any such journey such travelling allowance or daily allowance as he would be entitled to draw by virtue of his official position.

(3) The Collector of the district shall be the Controlling Officer empowered to countersign the travelling allowance bills of a Chairman or a member of a Special Board.

Office establishment of a Board.

109. (1) The Local Government may provide such ministerial or menial staff as it considers to be required from time to time by any Board, and may regulate the conditions of their employment and fix the salaries or allowances payable to them.

(2) The Collector of the district alone shall be competent to appoint, punish and generally control the staff of a Board.

Inspection.

110. Every Board shall at all times permit the Commissioner, Collector, Subdivisional Officer or Circle Officer or any other officer authorised by the Collector to have access to all its books, proceedings and records:

Provided that no Circle Officer may demand access to the books, proceedings or records of a Special Board unless so authorised.

Control over officers exercising powers of Collector.

111. Any officer appointed by the Local Government to exercise any of the powers of a Collector under the Act shall exercise such powers subject to the control of the Collector of the district.

Form I.

(*See* rules 14, 31 and 32.)

*A court-fee stamp of As. 12 is to be affixed here unless this Form is used merely for submitting a statement of debt under rule 31 or 32 of the Bengal Agricultural Debtors Rules, 1936.

Application and statement of debt by a debtor under the Bengal Agricultural Debtors Act, 1935.

Proceedings No..... Year.....

To the.....Debt Settlement Board,

.....

.....

I/we the undermentioned applicant/applicants *hereby apply under section 8 of the Bengal Agricultural Debtors Act, 1935, for the settlement of my/our debts, of which a list is given in Schedule A.

*have made an application in Form , dated , under sections 8 and 9 of the Bengal Agricultural Debtors Act, 1935, for the settlement of a joint debt of which a statement is given in that application and therefore submit this statement of debt.

Serial No.	Name of each applicant.	Father's or husband's name.	Caste of each applicant.	Residence (mauza, union, thana).

*Note.—Strike out the words which do not apply.

Schedule A.

(1) Amounts claimed by creditors to be due (including arrears of rent).

Serial No. of the debt.	Names and addresses of creditors.	Nature of the debt (with description of any bond or other document.)	Khatian and plot Nos. of any land mortgaged.	Date when the debt was incurred.
1	2	3	4	5

Amount of principal.	Rate of interest.	Total claimed by the creditor.	Amount (if any) admitted by debtor.
6	7	8	9

(2) Particulars of any joint debtors or sureties.

Reference to serial numbers in column 1.	Names and addresses of sureties or joint debtors.
10	11

(3) Particulars of any suit or proceeding instituted regarding any debt.

Reference to serial numbers in column 1.	Name of the court, etc	Nature of the suit or proceeding with its number and date and a note as to the stage reached.	Amount (if any) decreed, with details.
12	13	14	15

Directions.

1. Each debt is to be shown separately and given a separate serial number in column 1.

2. If there is more than one debt claimed by a creditor, his name should be entered once only against all such debts.

3. Column 4 is to be filled up only if there is a mortgage.

4. If there is a bond, "date when incurred" in column 5 and "principal" in column 6 mean the date and the principal shown in the current bond. If the bond has been renewed, details of the previous bonds should be shown in Schedule B.

5. "Total" in column 8 includes principal and interest and also any costs decreed by a court. If there is a *kistibandi* the sum total payable (and not merely the annual *kist*) should be shown here.

6. Column 14 should show whether it is a "rent suit," "money suit," "mortgage suit," "certificate proceeding," "proceeding for the execution of a decree," etc.

7. In column 14 "stage reached" means "pending for sale," "property attached" and the like.

8. In column 15 "details" means principal, interest and costs.

Any information for which there is no room in the columns provided should be given in Schedule B with references to the serial and column numbers of this schedule.

Schedule B.

History of the debts.

Reference to serial numbers in column 1 of Schedule A.	Give below any particulars additional to those given in Schedule A, such as the amounts paid from time to time. If the principal of any of the debts shown in Schedule A includes any arrears of interest which have been added when a bond has been renewed or an additional loan has been taken, the following information (so far as it is known to the debtor) should be given below with references in the margin to the serial numbers of the debts in column 1 of Schedule A :— the date when the debt was first incurred, the amount of the original principal, the approximate dates and the conditions on which the bond was renewed or the additional loan taken, the rate of interest stipulated in each bond, the amounts paid from time to time and any other relevant facts.

Schedule O.

Particulars of the immovable property of the debtor and of property transferred during the last two years.

(1) *Description of holding.*

Mauza Thana	Jurisdiction List No. District	Khatian No.

Number of landlord's khatian.	Name of landlord in brief.	Payable to landlord.		Description of the interest and names and residences of the co-sharers of the debtor.	Class to which tenant belongs, etc., special conditions and incidents.
		Rent.	Cess.		
1	2	3	4	5	6

(2) *Land let to tenants.*

Serial No.	Number of khatian of each subordinate interest.	Total area in each khatian in preceding column.		Payable to this interest		Extent of debtor's share or interest.	Estimated value.	Remarks. (Note particularly if any land is mortgaged and if there has been any land transferred in the last two years.)
		Acres.	Decimals.	Rent.	Cess.			
1	2	3	4	5	6	7	8	9

(3) *Land in direct possession of the debtor and his co-sharers.*

Khatian number (as in heading of part 1 of this schedule).....

Plot No.	Description of boundaries of the plot if it has no settlement number.	Class of land.	Remarks. (Note particularly if the plot is mortgaged and if there has been any land transferred in the last two years.)	Total area of plot.		Extent of debtor's share or interest.	Estimated value.
				Acres.	Decimals.		
1	2	3	4	5	6	7	8

Schedule D.

Particulars of any transfer of land.

(1) If the holding or any land included in it has been transferred within the last two years, give below the following details :—the plot numbers, nature of the transfer, value for which transferred, date of the transfer, and name and address of the transferee.

(2) Also enter in parts 2 and 3 of Schedule C particulars of any land included in the holding and transferred within the last two years.

Schedule E.

Particulars of the movable property of the debtor.

Serial No.	Description.	Estimated value.	Places where it may be found.
1	2	3	4

Schedule F.

Details of the supplementary income of the debtor.

Nature of the income (investments, service, etc.)	Annual amount earned or received.
1	2

Schedule G.

Particulars of any mortgage, lien or charge on movable property.

Schedule H.

Debts due to the debtor.

Serial No.	Amount claimed.		Names and residences of persons from whom claimed.	Nature of the debt with description of any bond and with khatian and plot Nos. of any land mortgaged.
	Principal.	Interest.		
1	2	3	4	5

I/we declare that all the debts which are due, or which to my/our knowledge any person claims to be due, from me/us and all my/our properties have been included in this statement * and that I/we am/are unable to pay the said debts as claimed in full.*

*I/we also declare that my/our primary means of livelihood is agriculture and that I am a *raiyat*/under-*raiyat*/we are *raiyats*/under-*raiyats* and I/we cultivate land myself/ourselves/by members of my/our family/by hired labourers/by *adhiars*, *bargadars* or *bhagdars*.*

Signatures of the persons submitting the application or statement of debt or of their authorised agents. .....
.....
.....
.....

Date.....

† Verification.

I also declare that the information given on the first page and in‡ of this application and statement is true to my knowledge and that the information given in the other parts thereof is inserted upon information received and believed by me to be true.

Declared at..... in my presence.

Signature or thumb impression of an applicant or authorised agent..... .....

Signature of Chairman/Member of the Board.....

Date.....

Note.—**Strike out portions which do not apply.

Note.—†This verification is not necessary if the Form is used merely for a statement of debt.

Note.—‡Here state the schedules and the numbers of the columns.

Form II.

(*See* rules 15 and 33.)

A court-fee stamp of As. 12 is to be affixed here unless this Form is used merely for submitting a statement of debt under rule 33 of the Bengal Agricultural Debtors Rules, 1936.

Application and statement of debt by a creditor under the Bengal Agricultural Debtors Act, 1935.

Proceedings No.....Year.....

To the .....Debt Settlement Board,

.....

.....

I/we the undermentioned applicant/applicants hereby apply under sub-section (2) of section 8 of the Bengal Agricultural Debtors Act, 1935, for the settlement of the debts owed to me/us by the debtor*/debtors whose debt and property are to my/our knowledge joint.*

Particulars regarding the applicant.

Serial No.	Name of each applicant.	Name of father or husband of each applicant.	Caste of each applicant.	Residence (mauza, union, thana).

* Strike out if not applicable.

Particulars regarding the debtor.

Serial No.	Name of each debtor.	Name of father or husband of each debtor.	Caste.	Residence of each debtor (mauza, union, thana).

Schedule A.

Amounts claimed by the applicant to be owing to him from the debtor.

Serial No.	Nature of the debt with description of any bond or other document.	Khatian and plot Nos. of any land mortgaged.	Date when the debt was first incurred.	Dates of all bonds, original or renewed.	Amount of principal shown in each bond.
1	2	3	4	5	6

Rate of interest shown in each bond.	Amounts paid since the current bond was executed.			Amount of the principal now due.	Total claimed as due.	Remarks. (Note here the amount of any loan given subsequently and amalgamated with the principal.)
	Principal.	Interest.	Dates.			
7	8	9	10	11	12	13

Schedule B.

Brief particulars of the debtor's immovable properties so far as they are known.

Serial No.	Mauza with J. L. No. and thana where the property is situated.	Name of landlord.	Settlement Khatian.	Nature of debtor's interest (tenure, ryoti, under-ryoti, etc.) with estimated value.	Extent of debtor's share or interest.
1	2	3	4	5	6

Area in acres.	Total payable yearly in—		Particulars of any mortgage, lien or charge.	Estimated value.	Remarks. (Here enter names and addresses of any co-sharers of the debtor.)
	Rent.	Cess.			
7	8	9	10	11	12

Schedule C.

Particulars of movable properties of the debtor, so far as they are known, with note as to any mortgage, lien or charge in favour of the applicant.

Schedule D.

Particulars of any supplementary income of the debtor.

Schedule E.

If the applicant has instituted any suit or proceeding regarding any debt owed by the debtor, particulars should be given here, with name of court, nature, number and date of the suit or proceeding, stage reached, amount decreed, etc.

Schedule F.

Names and addresses of other creditors of the debtor.

I/we hereby declare that agriculture is the primary means of livelihood of the debtor.

Signature of each applicant or his authorised agent.

....

.....

.....

....

Date.. .....

*** Verification.**

I also declare that the information given on the first page and in† ....of this application is true to my knowledge and that the information given in the other parts thereof is inserted upon information received and believed by me to be true.

Declared at. .....
on.....in my presence.

Signature or thumb impression of an applicant or authorised agent.....

Signature of Chairman/Member of the Board.....

Date.....

Note. *This verification is not necessary unless the creditor is the applicant under section 8 of the Act.

Note. †Here state the schedules and the numbers of the columns.

Form III.

(*See* rule 16.)

A court-fee stamp of As. 12 is to be affixed here.

Joint application under section 9 (1) of the Bengal Agricultural Debtors Act, 1935.

Proceedings No.....Year.....

To the.....Debt Settlement Board,

.....

.....

We, the undernamed joint debtors, hereby apply for relief under section 9(*1*) (*a*)/(*b*)* of the Agricultural Debtors Act, 1935, for the settlement of the joint* ancestral debt for which we are jointly liable and of which details are given on pages 2 and 3. Each of us has submitted a separate statement of debt in Form I which is to be read as part of this application.

Names of applicants.	Fathers' or husbands' names.	Caste.	Residence (mauza, union, thana).

* *Note.*—Strike out the letter or words not required.

Schedule A.

Amounts claimed by creditors to be due.

Serial No.	Names and addresses of creditors.	Nature of the debt (with description of the bond or other document).	Khatian or plot Nos. of any land mortgaged.	Date when the debt was incurred.
1	2	3	4	5

Amount of principal claimed.	Rate of interest.	Total claimed by the creditor.	Amount, if any, admitted by the debtors.	Remarks. (Give here particulars of any suit or proceeding instituted regarding the debt, with number and date and stage reached.)
6	7	8	9	10

Schedule B.

History of the debt.

Reference to the serial number in column 1 of Schedule A.	Give below any particulars additional to those given in Schedule A, such as the amounts paid from time to time. If the principal of any debt shown on page 2 includes any arrears of interest which have been added when a bond has been renewed or an additional loan has been taken, the following information (so far as it is known to the debtor) should be given below with a reference in the margin to the serial number of the debt in column 1 of Schedule A :—the date when the debt was first incurred, the amount of the original principal, the approximate dates and conditions on which the bond was renewed or the additional loan taken, the rate of interest stipulated in each bond, the amounts paid from time to time and any other relevant facts.

Declaration by the applicant who is a debtor within the meaning of the Act.

I declare that my primary means of livelihood is agriculture and that I am a *raiyat*/under-*raiyat* and I cultivate land myself/by members of my family/by hired labourers/by *adhiars*, *bargadars* or *bhagdars*.*

I also declare that I am unable to pay my debts in full and that I have submitted a separate application covering my debts other than the joint debt to which this application refers.

Signature or thumb impression of the applicant debtor or recognised agent. .....

Signatures or thumb impressions of the other applicants. ....

.....

.....

.....

* Strike out portions which do not apply.

Verification.

I declare that the information given on the first page and in*.....
.....of this application is true to my knowledge and that the information given in the other parts thereof is inserted upon information received and believed by me to be true.

Declared at .....
on.....in my presence.

Signature of Chairman/Member of the Board.. .....

Signature or thumb impression of an applicant or authorised agent ....

Date .....

*Here state the schedules and the numbers of the columns.

Form IV.

(*See* rule 24.)

Notice to a Central Society of an application under the Bengal Agricultural Debtors Act, 1935.

To the Chairman,

.....Society,

....

Proceedings No.....year.....

Notice is hereby given to you that an application under section 8 of the Bengal Agricultural Debtors Act, 1935, for the settlement of the debts of the undermentioned debtor who is said to be a member of and to be indebted to the..... .....Co-operative Society has been received and will be considered by this Board on.....

Signed.....

Seal of the Board. *Chairman,*

.....*Debt Settlement Board.*

Dated.....

Name and description of the debtor.

Name.	Name of father or husband.	Caste.	Residence.

Form V.

(*See* rule 25.)

Notice under section 12 (2) of the Agricultural Debtors Act, 1935, to a debtor, creditor or other interested person.

Proceedings No.....year.....

To

.....son/wife of.....

resident in mauza....., thana....., district.....

*Whereas you are reported to be a creditor/co-sharer/joint debtor/surety of/a purchaser of immovable property from ....., resident in mauza....., thana....., district.....

Notice is hereby given to you that an application for the settlement of †your/his/her debts under the Bengal Agricultural Debtors Act, 1935, has been received and will be considered by this Board at..... on the.....day of.....19.., at.....o'clock.

Signed.....

Seal of the Board.

Chairman,

.....*Debt Settlement Board.*

Dated.....

*Strike out this paragraph if the notice is addressed to the debtor.

†Strike out the word "your" "his" or "her" as the case may be.

Form VI.

(*See* rule 27.)

Notice under section 13 (1) of the Bengal Agricultural Debtors Act, 1935.

Proceedings No.....year.....

To

....., son of/wife of....., resident in mauza.....union.....thana..... district.....

Whereas an application has been submitted for the settlement of the debts of the undermentioned debtor, and whereas this Board is of opinion that it is desirable to attempt to effect a settlement between the said debtor and his creditors, you/all the said creditors are hereby required to submit to this Board a written statement in the prescribed form giving full particulars of all debts owed to you/them by the said debtor within one month of the service of this notice upon you/publication of this notice at the Board's office.

The Board will scrutinise such statement at their meeting on the.....day of.....at.....o'clock, when you/the creditors should be present.

Signed.....

Seal of the Board. *Chairman,*

.....*Debt Settlement Board.*

Dated.....

Note.—Under section 13 (2) of the Act a Board so empowered may declare that the amount of any debt of which a statement is not submitted in compliance with this notice shall be deemed to be the amount given in the statement of the debtor or not to be payable if it is not in the debtor's statement.

Name and description of the debtor.

Name.	Name of father or husband.	Name of mauza, union, thana where resident.

Form VII.

(*See* rule 35.)

Order under section 13 (2) of the Bengal Agricultural Debtors Act, 1935.

In the matter of the settlement of the debts of....., son/wife of..... .... , resident in mauza....., thana....., district.....

Proceedings No. .....dated.....

Whereas....., son/wife of..... resident in mauza....., thana....., district....., is a creditor of the abovenamed debtor, and whereas the said creditor has failed to comply with a notice, dated..... ....., under sub-section (*1*) of section 13 of the Bengal Agricultural Debtors Act, 1935 ;

It is hereby ordered that the sum of Rs. ....., which is stated to be the amount due to him in the statement of debt submitted by the debtor, shall be deemed to be the amount due to the said creditor from the debtor on the date of this order and that no other debt of which the said creditor has failed to submit a statement before the date of this order shall be payable by the debtor to him.

Given under my hand and under the seal of the Board this.....day of.....19...

Signed.....

Seal of the Board. *Chairman,*

..... *Debt Settlement Board.*

Form VIII.

(*See* rule 44)

Summons to a party or a witness under the Bengal Agricultural Debtors Act, 1935.

Before the..... Debt Settlement Board

Proceedings No.....year.....

In the matter of.....resident at mauza.....
....., thana....., Debtor, and..... .....
....., resident of....., Creditor.

To

.. .., son of.....
resident in mauza....., thana.....,
district.....

You are hereby required to appear in person or by agent before this Board at.....
on the..... day of.....19...., at..... o'clock in the forenoon, for the purpose of giving evidence in the above matter, *and to produce or cause to be produced before the Board the following document, namely* :-

If you fail to comply with this order without lawful excuse you will be subject to the consequences of non-attendance laid down in Order XVI of the Code of Civil Procedure 1908.

Given under my hand and the seal of the Board this..... day of ....., 19.....

Chairman,

Seal of the Board. ..... *Debt Settlement Board.*

* If no document is required to be produced, the words between asterisks should be struck out.
The words "or by agent" and "or cause to be produced" should be struck out if the person summoned is required to attend personally.

Form IX,

(*See* rule 54)

Certificate under section 21 of the Bengal Agricultural Debtors Act, 1935.

Names of the parties.

First party Debtor.			Second party--Creditor.		
Name.	Name of father or husband.	Residence.	Name.	Name of father or husband.	Residence.

This is to certify that during proceedings No ..... of the year..... under the Bengal Agricultural Debtors Act, 1935, in the matter of the undermentioned debts claimed to be owing from the first party, the second party has refused an offer made by the first party which in the opinion of this Board was a fair offer and such as ought reasonably to have been accepted.

2. The following particulars of his claim were furnished by the second party :—

Nature of the debt with description of any bond, etc.	Principal of the debt.	Rate of interest.	Total amount claimed.	Remarks.
1	2	3	4	5

3. It is hereby ordered under section 21 of the said Act that if no award is made in respect of other debts of the first party the period during which the second party is debarred from executing any decree in respect of the aforementioned debts shall be.....years from the date of this certificate.

Signature.....

Dated..... *Chairman.*

Seal of the Board. .....*Debt Settlement Board.*

Form X.

(*See* rule 55.)

Requisition to a Certificate-officer under section 22(2) of the Bengal Agricultural Debtors Act, 1935.

To

The Certificate-officer,

.....

.....

Proceedings No..... year.....

In the matter of..... resident in mauza.....
thana....., district.....

Whereas, by an order, dated.....of which a copy is attached, under sub-section (*1*) of section 22 of the Bengal Agricultural Debtors Act, 1935, this Board has declared the person abovenamed to be an insolvent and has further directed that all his property as shown in Schedule ..... of that order shall be sold and the proceeds be utilised towards the payment of his debts ;

I hereby require you under sub-section (*2*) of the said section to take such action as is necessary under the said Act to give effect to the said order.

Given under my hand and under the seal of the Board this..... day of.....19.....

Signed.....
Chairman,
.....*Debt Settlement Board.*

Seal of the Board.

Form XI.

(*See* rule 58.)

Certificate of discharge granted to an insolvent under section 22(5) of the Bengal Agricultural Debtors Act, 1935.

In the matter of the insolvent.....resident in mauza....., thana....., district.....

Whereas an order of discharge has been made by this Board under sub-section (5) of section 22 of the Bengal Agricultural Debtors Act, 1935, in proceedings No..... of the year....., on the..... day of....., 19.....

It is hereby certified that, subject to the provisions of the proviso to the said sub-section, the abovenamed insolvent is, with effect from the date of the said order, released from liability to pay any debt which was or might have been included in the application made in respect of his debts, under section 8 of the said Act, on the..... day of....., 19.....

Dated the..... day of....., 19.....

Chairman,
.....Debt Settlement Board.

Seal of the Board.

Form XII.

(*See* rule 61.)

Award under the Bengal Agricultural Debtors Act, 1935.

Proceedings No.....Year.....

ORDER OF THE BOARD.

Whereas, on an application made under the Bengal Agricultural Debtors Act, 1935, for the settlement of the debts of the debtor described in Schedule A, this Board has determined that he owes the debts specified in column 5 of Schedule C, to the creditors named in that Schedule,

And whereas an amicable settlement has been made under clause (*a*) of sub-section (*1*) of section 19 of the Act regarding the terms on which the debts numbered.....in Schedule C shall be paid and orders have been passed by this Board under clause (*b*) of the said sub-section regarding the terms on which the debts numbered..... .....in Schedule C shall be settled,

It is hereby ordered under section 25 of the Act that the debtor shall pay to each creditor concerned such amounts as are shown against his name in columns 7 to 11 of Schedule C in the manner laid down therein,

And it is hereby further ordered that all the immovable and movable properties of the debtor specified in Schedules E and D (except such as are exempt from sale) shall, *subject to any mortgage, lien or charge shown in the said Schedules as subsisting thereon*, be security for the amounts payable under this award, and that †.....simple interest shall be payable at.....per cent. per annum on any such amount not paid at the time when it is due.

*Words within asterisks should be struck out if not applicable.
†Enter "no" here if interest is not to be payable.

Chairman.

Seal of the Board.

Members,

.....*Debt Settlement Board.*

Dated.....

Schedule A.

Description of the debtor.

Serial No.	Name.	Caste.	Name of father or husband.	Names of mauza, union and thana where resident.

Schedule B.

Description of the creditors.

Serial No.	Name.	Caste.	Name of father or husband.	Names of mauza, union and thana where resident.

Schedule C.

Details of the debtor's debts and terms of settlement.

Serial No. of the debt.	Name of the creditor.	Amount of the debt as admitted or determined under section 18.			Clause under which settlement is made.
		Principal.	Interest.	Total.	
1	2	3	4	5	6

Amounts payable under the award.				Total in both words and figures.	Remarks.
In how many instalments.	Amount of each instalment.	When payable.			
		Year.	Month.		
7	8	9	10	11	12

Schedule D.

Immovable property of the debtor.

Serial No.	Name of the mauza and thana and specification of the property.	Name of the landlord.	No. of Khatian.	Amount payable.	
				Rent.	Cess.
1	2	3	4	5	6

Area in—		Nature and extent of debtor's interest.	Details of any mortgage, lien or charge on the property.	Remarks.
Acres	Decimals.			
7	8	9	10	11

Schedule E.

Movable properties of the debtor on which there is a mortgage, lien or charge.

Form XIII.

(*See* rule 61.)

Form of award when a debtor is declared insolvent under section 22 of the Bengal Agricultural Debtors Act, 1935, and an order is passed by the Board under clause (a) of sub-section (1) of that section.

Proceedings No. Year

ORDER OF THE BOARD.

Whereas, on an application for the settlement of the debts of the debtor described in Schedule A, this Board has determined that he owes the debts specified in column 5 of Schedule C to the creditors named in that Schedule,

And whereas the Board is satisfied that the said debts cannot be reduced under the provisions of section 19 of the Bengal Agricultural Debtors Act, 1935, to an amount which the debtor will be able to repay within twenty years and that he is a fit person to be given the benefit of section 22 of the said Act,

The Board hereby declares the said debtor to be insolvent and orders that his debts be reduced to the amounts shown in column 10 of Schedule C and be repaid in.....years in the manner shown in columns 6, 7, 8, 9 and 10 of the said Schedule,

and the Board further orders that all the immovable and movable properties of the debtor described in Schedules D and E (except such as are exempt from sale) shall, *subject to the mortgage, lien or charge shown in those Schedules as subsisting on any of them*, be security for the amounts payable under this order and that †....simple interest shall be payable at.....per centum per annum on any such amount not paid at the time when it is due.

Signed.....

Chairman.

Seal of the Board.

Members,

.....*Debt Settlement Board.*

Dated.....

*Strike out the words between asterisks if not applicable.

†Enter "no" here if interest is not to be payable.

Schedule A.

Description of the debtor

Serial No	Name	Caste	Name of father or husband	Names of mauza, union and thana where resident

Schedule B.

Description of the creditors

Serial No	Name	Caste	Name of father or husband	Names of mauza union and thana where resident

Schedule C.

Details of the debtor's debts and terms of settlement

Serial No of the debt	Name of the creditor	Amount of the debt as admitted or determined under section 18.			Amounts payable under the award	
		Principal.	Interest.	Total.	Number of instalments.	Amount of each
1	2	3	4	5	6	7

Amounts payable under the award.			Remarks.
When payable		Total in words and figures	
Year.	Month.		
8	9	10	11

Schedule D.

Immovable property of the debtor.

Serial No.	Specification of property. Name of thana and mauza where situated.	Name of the landlord	No. of Khatian.	Amount payable.	
				Rent.	Cess.
1	2	3	4	5	6

Area.		Nature and extent of debtor's interest.	Details of any mortgage, lien or charge on the property.	Remarks. (Here give details of any property exempted from sale.)
Acres.	Decimals.			
7	8	9	10	11

Schedule E.

***Movable property of the debtor** (with particulars of any mortgage, lien or charge).*

Form XIV.

(*See* rule 61.)

Form of award when a debtor is declared insolvent under section 22 of the Bengal Agricultural Debtors Act, 1935, and an order is passed by the Board under clause (b) of sub-section (1) of that section.

Proceedings No. Year

ORDER OF THE BOARD.

Whereas, on an application for the settlement of the debts of the debtor described in Schedule A, this Board has determined that he owes the debts specified in column 5 of Schedule C to the creditors named in that Schedule,

And whereas the Board is satisfied that the said debts cannot be reduced under the provisions of section 19 of the Bengal Agricultural Debtors Act, 1935, to an amount which the debtor will be able to repay within twenty years and that he is a fit person to be given the benefit of section 22 of the Act,

The Board hereby declares the said debtor to be insolvent,

And whereas the Board does not consider the reduction of the debts of the said debtor under clause (*a*) of sub-section (*1*) of section 22 of the Act to be desirable for the reason that

The Board hereby orders that all his immovable property as described in Schedule D other than that specifically exempted therein and all his movable property which is not exempted from sale by rules 59 and 60 of the Bengal Agricultural Debtors Rules, 1936, shall be sold and the proceeds be utilised towards the payment of the debts specified in column 5 of Schedule C in the manner prescribed by rule 56 of the said Rules.

Signed.....

Chairman.

Seal of the Board.

Members,

.....*Debt Settlement Board.*

Dated.....

Schedule A.

Description of the debtor.

Serial No.	Name.	Caste.	Name of father or husband.	Names of mauza, union and thana where resident.

Schedule B.

Description of the creditors.

Serial No.	Name.	Caste.	Name of father or husband.	Names of mauza, union and thana where resident.

Schedule C.

Details of the debtor's debts.

Serial No. of the debt.	Name of the creditor.	Amount of the debt as admitted or determined under section 18.			Remarks.
		Principal.	Interest.	Total.	
1	2	3	4	5	6

Schedule D.

Immovable property of the debtor.

Serial No.	Specification of property. Name of thana and mauza where situated	Name of the landlord	No. of Khatian.	Amount payable.	
				Rent.	Cess.
1	2	3	4	5	6

Area.		Nature and extent of debtor's interest.	Details of any mortgage, lien or charge on the property.	Remarks. (Here give details of any property exempted from sale.)
Acres.	Decimals.			
7	8	9	10	11

Schedule E.

Movable property of the debtor (with particulars of any mortgage, lien or charge).

Form XV.

(*See* rule 73.)

Notice to a Court under section 34 of the Bengal Agricultural Debtors Act, 1935.

Proceedings No.....Year.....

To

The.....

.....

.....

Sir,

I have the honour to give notice under section 34 of the Bengal Agricultural Debtors Act, 1935, that an application made/a statement of debts submitted to this Board on.....under section 8/sub-section (*1*) of section 13 of the said Act includes a debt claimed to be owing from....., son/wife of..... .....caste....., resident at..... in respect of which suit/proceedings No....., dated..... is/are said now to be pending before you between*.....son/wife of..... ....., caste..... resident at..... and the said.....

I have the honour to be,

Sir,

Your most obedient servant,

Seal of the Board.

Signature..... .....

Chairman,

.....*Debt Settlement Board.*

Date.....

* Name of creditor to be entered here.

Form XVI.

(*See* rule 74.)

Notice under section 35 of the Bengal Agricultural Debtors Act, 1935.

To

The Chairman,

.....Debt Settlement Board,

.....

With reference to proceedings No.....of the year.....under the Bengal Agricultural Debtors Act, 1935, I hereby give notice that decree/certificate No....., dated....., has been passed/issued in case No.....in my favour by the*..... against.....son/wife of....., resident in mauza....., thana....., district....., for the recovery of Rs.....on account of arrears of rent for the period.....for the marginally noted holding and that I have applied for execution of such decree/certificate.

Signed .....

Date..... Address .....

Memo. No....., dated.....

Received on.....and forwarded to the*....., for information, under section 35(*ii*) of the Bengal Agricultural Debtors Act, 1935.

Signed .....

Chairman,

Seal of the Board. .....*Debt Settlement Board.*

Dated .....

* Here enter the name of the Court or Certificate Officer.

Form XVII.

(*See* rule 77.)

Order of attachment of immovable property under section 37 of the Bengal Agricultural Debtors Act, 1935.

In the office of the

....Debt Settlement Board

at .....

Proceedings No.....year.....

Whereas an application has been made under section 8 of the Bengal Agricultural Debtors Act, 1935, for the settlement of the debts of.....
son/wife of.....
resident in mauza.....
thana....., district.....and whereas it is in the opinion of this Board advisable to attach his/her immovable property, it is hereby ordered under section 37 of the said Act that the said..... .....
be, and he/she hereby is, prohibited and restrained, until the further order of this Board, from transferring or charging by sale, gift or otherwise the property specified in the schedule hereunto annexed, and that all other persons be, and they are hereby, prohibited from receiving, or taking any benefit of, the same by purchase, gift or otherwise, until this order is withdrawn or cancelled.

Given under the seal of this Board,
this .....day of.....19.....

Signed.....
Chairman,
.....*Debt Settlement Board.*

Seal of the Board.

Schedule of Property.

Form XVIII.

(*See* rule 77.)

Notice of order of attachment of immovable property under section 37 of the Bengal Agricultural Debtors Act, 1935.

Memo. No....., dated.....

The annexed copy of an order for the attachment of the immovable property of..... is forwarded with the request that the Munsif/Sub-Registrar will cause it to be displayed conspicuously in his court/office as required by rule 75 (2) of the Bengal Agricultural Debtors Rules, 1936.

Signed.....
Chairman,
.....*Debt Settlement Board.*

Seal of the Board.

Dated.....
....

To

The Munsif/Sub-Registrar,
.....
.....

Memo. No....., dated.....

Received memo. No....., dated....., from the..... .....Debt Settlement Board, forwarding a copy of an attachment order dated.....

Signed.....
Munsif/Sub-Registrar.

Dated.....

Form XIX.

(*See* rule 77.)

Notice of withdrawal of attachment of immovable property under the Bengal Agricultural Debtors Act, 1935.

No.

From

The Chairman of the.....Debt Settlement Board

at.....

To

The Munsif/Sub-Registrar of.....

Dated the .....19.....

Sir,*

With reference to Memo. No. ..... dated....., forwarding for publication an order for the attachment of the immovable property of.....
resident in mauza.....,
thana....., district.....,
I have the honour to inform you that the attachment has been withdrawn.

I have the honour to be,
Sir,
Your most obedient servant,

Seal of the Board.

Chairman,
.....*Debt Settlement Board.*

No. 9186L.R.—26th June 1936.—In exercise of the power conferred by sub-section (*3*) of section 1 of the Bengal Agricultural Debtors Act, 1935 (Bengal Act VII of 1936), the Governor in Council is pleased to direct that the said Act shall come into force in the under-mentioned districts on the 3rd July 1936 :—

Dacca.	Bogra.
Mymensingh.	Pabna.
Faridpur.	Malda.
Bakarganj.	Chittagong.
Rajshahi.	Tippera.
Dinajpur.	Noakhali.
Jalpaiguri.	Howrah.
Rangpur.	Midnapore.

No. 9188L.R.—26th June 1936.—In exercise of the power conferred by clause (*b*) of sub-section (*2*) of section 55 of the Bengal Agricultural Debtors Act, 1935 (Bengal Act VII of 1936), read with sub-section (*3*) of that section, the Governor in Council is pleased to make the following rule to provide for the fees to be paid on applications made to a Debt Settlement Board under section 8 of the said Act, namely :—

Rule.

An application made to a Debt Settlement Board under section 8 of the Bengal Agricultural Debtors Act, 1935, shall be stamped with court-fee stamps of the value of twelve annas.

Jalpaiguri-Darjeeling.—No. 870T. R.—16th June 1936.—The following modifications are made in the rules for the grant of leases of waste lands for tea cultivation in the districts of Jalpaiguri and Darjeeling which were published under notification No. 18261L. R., dated the 27th November 1935, published at pages 2427-2445, Part I of the *Calcutta Gazette* of 5th December 1935 :—

For rule 57 and the note thereunder *substitute* the following :—

The rate of rent for land under tea shall not exceed the rate of rent paid in the neighbourhood at the time of renewal for the highest class of land under ordinary cultivation, and the rates of rent for other classes of land within the grant shall not exceed the highest rates paid at the time of renewal for similar lands in the neighbourhood, provided that the average rate of rent shall not be less than Rs. 1-4-0 per acre.

Provided also that when a lease is renewed for a grant on which there is a *hat* or market, the Deputy Commissioner will inquire into the income of the *hat* or market and the cost of maintaining it and the net profit, and that in such cases a percentage of the net profit derived by the lessee from the *hat* or market may be added to the rent assessed under the first part of this rule and the total will be the rent of the grant for the whole period of the lease.

Note.—(*1*) The " rate of rent per acre paid in the neighbourhood at the time of renewal for the highest class of land under ordinary cultivations " does not refer to the rent paid by *jotedars* or any particular grade of tenants but to the rate which any *chukanidar* or actual cultivator can, as experience has shown, afford to pay for the most fertile land growing rice, sugarcane, or any other staple crop.

(*2*) It is not intended to assess extra rents on *hats* which are on a scale commensurate with the needs of the population of the tea-garden concerned.

Hooghly. — No. 8889L.R.—20th June 1936.—Under section 3 of the Bengal Survey Act (V of 1875), the Governor in Council is pleased to order that a survey shall be made of all lands which are comprised in the Government estates mentioned below of the Hooghly Collectorate, and that the boundaries of the estates, tenures, mauzas, and fields be demarcated on the lands so to be surveyed :—

List of Government Estates.

Serial No.	Tauzi No.	Name of estate.
1	4443	29th mile to 38th mile, Grand Trunk Road.
2	4453	39th mile to 49th mile, Grand Trunk Road.

Hooghly. — No. 8890L.R.—20th June 1936.—In exercise of the powers conferred by section 101 (*2*) (*d*) of the Bengal Tenancy Act (Act VIII of 1885), the Governor in Council is pleased to order that a survey shall be made and a record-of-rights prepared in respect of all lands which are comprised in the following Government estates of the Hooghly Collectorate :—

List of Government Estates.

Serial No.	Tauzi No.	Name of estate.
1	4443	29th mile to 38th mile, Grand Trunk Road.
2	4453	39th mile to 49th mile, Grand Trunk Road.

The particulars to be recorded in the record-of-rights shall be the following :—

(*a*) the name of each tenant or occupant ;

(*b*) the class or classes to which each tenant belongs, that is to say, whether he is a tenure-holder, raiyat holding at fixed rates, settled raiyat, occupancy raiyat, non-occupancy raiyat, or under-raiyat, with or without a right of occupancy, and if he is a tenure-holder, whether he is a permanent tenure-holder or not, and whether his rent is liable to enhancement during the continuance of his tenure ;

(*c*) the situation and quantity of the land held by each tenant or occupier ;

(*d*) the name of each tenant's landlord ;

(*e*) the rent and cess lawfully payable by each tenant at the time the record-of rights is being prepared ;

(*f*) the amount payable in respect of any rights of pasturage, forest rights, rights over fisheries and the like at the time the record-of-rights is being prepared, the condition and incidents appertaining to such rights, and if the amount is a gradually increasing amount, the time at which and the increments by which it increases ;

(*g*) the mode in which that rent has been fixed, whether by contract, by order of a court, or otherwise ;

(*h*) if the rent is a gradually increasing rent, the time at which and the steps by which it increases ;

(*i*) the rights and obligations of each tenant and landlord in respect of—

(*i*) the use by tenants of water for agricultural purposes, whether obtained from a river, jhil, tank or well or any other source of supply, and

(*ii*) the repair and maintenance of appliances for securing a supply of water for the cultivation of the land held by each tenant, whether or not such appliances be situated within the boundaries of each land ;

(*j*) the special conditions and incidents, if any, of the tenancy ;

(*k*) any right-of-way or other easement attaching to the land for which record-of-rights is being prepared ;

(*l*) if the land is claimed to be held rent-free, whether or not rent is actually paid, and if not paid, whether or not the occupant is entitled to hold the land without payment of rent, and, if so entitled, under what authority ;

Provided that if lands are not used for purposes connected with agriculture or horticulture, it shall be sufficient to record that fact together with the prescribed particulars relating to the occupant, the landlord and the tenancy.

Nadia-Murshidabad-Rajshahi.—No. 8962L.R.—22nd June 1936.—Under the provisions of section 3 (*14*) of the Bengal Tenancy Act, 1885 (Act VIII of 1885), Babu Jatindra Mohan Chakrabarty, Settlement Kanungo, is authorised to discharge, in the districts of Nadia, Murshidabad and Rajshahi, the functions of a Revenue Officer, under Chapter X of that Act, so far as they relate to surveys and the preparation of record-of-rights.

Land Acquisition.

NOTIFICATIONS.

Jalpaiguri.—No. 8894L.A.—20th June 1936.—Whereas it appears to the Governor in Council that land is likely to be required to be taken by Government at the expense of the district board of Jalpaiguri for a public purpose, viz., for a road in the *char* of the Teesta river in the village of Kharia, pargana Baikunthapur, zilla Jalpaiguri, it is hereby notified that for the above purpose a piece of land comprising parts of cadastral plots Nos. 1, 13 and 14 of Sheet No. 21, measuring, more or less, 1·48 acres, bounded on the—

North and south—By settlement plots Nos. 1, 13 and 14 of Sheet No. 21,

East—By Teesta river channel,

West—By settlement plot No. 490, Sheet No. 11,

is likely to be required within the aforesaid village of Kharia.

This notification is made under the provisions of section 4 of Act 1 of 1894, to all whom it may concern.

A plan of the land may be inspected in the office of the Deputy Commissioner, Jalpaiguri.

In exercise of the powers conferred by the aforesaid section the Governor in Council is pleased to authorise the officers for the time being engaged in the undertaking, with their servants and workmen, to enter upon and survey the land and do all other acts required or permitted by that section.

Any person interested in the above land, who has any objection to the acquisition thereof, may, within thirty days after the date on which public notice of the substance of this notification is given in the locality, file an objection in writing before the Deputy Commissioner, Jalpaiguri.

24-Parganas.—No. 8948L.A.—22nd June 1936.—Whereas it appears to the Governor in Council that land is likely to be required to be taken by Government partly at the public expense and partly at the expense of the authority of the Sursoona Middle English School for a public purpose, viz., for the play ground for the Sursoona Middle English School, in the village of Dakshin Behala, jurisdiction list No. 16, thana Behala, pargana Balia, district 24-Parganas, it is hereby notified for the above purpose a piece of land

comprising cadastral plot No. 353, and measuring, more or less, 0·62 of an acre, is likely to be required within the aforesaid village of Dakshin Behala.

This notification is made, under the provisions of section 4 of Act I of 1894, to all whom it may concern.

A plan of the land may be inspected in the office of the Land Acquisition Deputy Collector, 24-Parganas.

In exercise of the powers conferred by the aforesaid section, the Governor in Council is pleased to authorise the officers for the time being engaged in the undertaking, with their servants and workmen, to enter upon and survey the land and do all other acts required or permitted by that section.

Any person interested in the above land, who has any objection to the acquisition thereof, may, within thirty days after the date on which public notice of the substance of this notification is given in the locality, file an objection in writing before the Collector of 24-Parganas.

Rangpur.—No 9144L.A. 26th June 1936.—Whereas it appears to the Governor in Council that land is likely to be required to be taken by Government at the expense of the Rangpur district board for a public purpose, viz., for dispensary building and staff quarters at Chilmari, in the village of Boilmondiarkhata, jurisdiction list No. 281, thana Chilmari, pargana Baharband, district Rangpur, it is hereby notified that for the above purpose a piece of land measuring, more or less, 3·71 acres, bounded on the—

North and East—By district board road No. 26 and union board road,

South and West—By union board road and Enatulla Sarkar's land,

is likely to be required within the aforesaid village of Boilmondiarkhata.

This notification is made, under the provisions of section 4 of Act I of 1894, to all whom it may concern.

A plan of the land may be inspected in the office of the Subdivisional Officer of Kurigram.

In exercise of the powers conferred by the aforesaid section, the Governor in Council is pleased to authorise the officers for the time being engaged in the undertaking, with their servants and workmen, to enter upon and survey the land and do all other acts required or permitted by that section.

Any person interested in the above land, who has any objection to the acquisition thereof, may, within thirty days after the date on which public notice of the substance of this notification is given in the locality, file an objection in writing before the Collector of Rangpur.

Howrah.—No. 9147L.A. 26th June 1936.—Whereas it appears to the Governor in Council that land is likely to be required to be taken by Government at the expense of the Howrah district board, for a public purpose, viz., for staff quarters of the Singty Thana Charitable Dispensary, in the village of Singty, jurisdiction list No. 40, thana Amta, pargana Bhursut, district Howrah, it is hereby notified that for the above purpose a piece of land measuring more or less, 0·356 of an acre, bounded on the—

North—By Nanda Lal Palodhi's land,

East—By union board office building and patit land,

South—By Harispur-Joinagar local board road,

West—By Moni Mohan Bose and other's land, and Kisori Mohan Khan's shop,

is likely to be required within the aforesaid village of Singty.

This notification is made, under the provisions of section 4 of Act I of 1894, all to whom it may concern.

A plan of the land may be inspected in the office of the Subdivisional Officer of Uluberia.

In exercise of the powers conferred by the aforesaid section, the Governor in Council is pleased to authorise the officers for the time being engaged in the undertaking, with their servants workmen, to enter upon and survey the land and do all other acts required or permitted by that section.

Any person interested in the above land, who has any objection to the acquisition thereof, may, within thirty days after the date on which public notice of the substance of this notification is given in the locality, file an objection in writing before the Collector of Howrah.

24-Parganas.—No. 9150L.A.—26th June 1936.—Whereas it appears to the Governor in Council that land is likely to be required to be taken by Government at the expense of the Calcutta Corporation for a public purpose, viz., for an incinerator on Russa Road South in the village of Kaklia, jurisdiction list No. 40, thana Tollygunge, pargana Panchannagram, district 24-Parganas, it is hereby notified that for the above purpose a piece of land comprising portion of cadastral plots No. 2 and 3, and measuring, more or less, 2·3802 acres, is likely to be required within the aforesaid village of Kaklia.

This notification is made, under the provisions of section 4 of Act I of 1894, to all whom it may concern.

A plan of the land may be inspected in the office of the Chief Valuer and Surveyor of the Calcutta Corporation and in that of Land Acquisition Deputy Collector, 24-Parganas.

In exercise of the powers conferred by the aforesaid section, the Governor in Council is pleased to authorise the officers for the time being engaged in the undertaking, with their

servants and workmen, to enter upon and survey the land and do all other acts required or permitted by that section.

Any person interested in the above land, who has any objection to the acquisition thereof, may, within thirty days after the date on which public notice of the substance of this notification is given in the locality, file an objection in writing before the Collector of 24-Parganas.

Tippera. — No. 9153L.A.—26th June 1936.—Whereas it appears to the Governor in Council that land is likely to be required to be taken by Government at the expense of the Brahmanbaria Municipality for a public purpose, viz., for a trenching ground at Brahmanbaria, in the village of Merura, jurisdiction list No. 258, thana Brahmanbaria, pargana Sarail, district Tippera, it is hereby notified that for the above purpose a piece of land comprising cadastral plot No. 1293, and measuring, more or less, 0·42 of an acre, bounded on the—

North—By cadastral plot No. 1291 and portion of cadastral plot No. 1292,

East—By cadastral plot No. 1286 and portion of cadastral plot No. 1285,

South—By cadastral plot No. 1307,

West—By cadastral plot No. 1294.

is likely to be required within the aforesaid village of Merura.

This notification is made, under the provisions of section 4 of Act I of 1894, to all whom it may concern.

A plan of the land may be inspected in the office of the Subdivisional Officer, Brahmanbaria.

In exercise of the powers conferred by the aforesaid section, the Governor in Council is pleased to authorise the officers for the time being engaged in the undertaking, with their servants and workmen, to enter upon and survey the land and do all other acts required or permitted by that section.

Any person interested in the above land, who has any objection to the acquisition thereof, may, within thirty days after the date on which public notice of the substance of this notification is given in the locality, file an objection in writing before the Subdivisional Officer, Brahmanbaria.

Howrah. — No. 9159L.A.—26th June 1936.—Whereas it appears to the Governor in Council that land is likely to be required to be taken by Government at the expense of the district board of Howrah for a public purpose, viz., for the extension of the Ulubaria Charitable Dispensary compound in the village of Kaliganj Hat (Ulubaria), jurisdiction list No. 136, thana Ulubaria, pargana Bir, district Howrah, it is hereby notified that for the above purpose two pieces of land altogether measuring, more or less, 1·4452 acres, bounded on the—

Plot No. 1 :

North—By dispensary compound,

East—By drain,

South and west—By Cuttak road,

Plot No. 2 :

North—By patit land,

East—By khal,

South—By drain,

West—By hospital compound,

are likely to be required within the aforesaid village of Kaliganj Hat (Ulubaria).

This notification is made, under the provisions of section 4 of Act I of 1894, to all whom it may concern.

A plan of the land may be inspected in the office of the Subdivisional Officer of Ulubaria.

In exercise of the powers conferred by the aforesaid section, the Governor in Council is pleased to authorise the officers for the time being engaged in the undertaking, with their servants and workmen, to enter upon and survey the land and do all other acts required or permitted by that section.

Any person interested in the above land, who has any objection to the acquisition thereof, may, within thirty days after the date on which public notice of the substance of this notification is given in the locality, file an objection in writing before the Collector of Howrah.

24-Parganas.—No. 9162L.A.—26th June 1936.—Whereas it appears to the Governor in Council that land is likely to be required to be taken by Government at the public expense for a public purpose, viz., for the improvement of a dangerous corner between m.14-4f. and m.14-5f. of the Calcutta Jessore road, in the village of Prasadpur, jurisdiction list No. 39, thana Barasat, pargana Anwarpur, district 24-Parganas, it is hereby notified that for the above purpose a piece of land comprising portions of cadastral plot Nos. 258, 259 and 261 and entire plot Nos. 260 and 369, and measuring, more or less, 0·0443 of an acre, is likely to be required within the aforesaid village of Prasadpur.

This notification is made, under the provisions of section 4 of Act I of 1894, to all whom it may concern.

A plan of the land may be inspected in the office of the Land Acquisition Deputy Collector, 24-Parganas; as well as in that of the Executive Engineer, Suburban Divisions.

In exercise of the powers conferred by the aforesaid section, the Governor in Council is pleased to authorise the officers for the time being engaged in the undertaking, with their servants and workmen, to enter upon and survey the land and do all other acts required or permitted by that section.

Any person interested in the above land, who has any objection to the acquisition thereof, may, within thirty days after the date on which public notice of the substance of this notification is given in the locality, file an objection in writing before the Collector of the 24-Parganas.

DECLARATIONS.

Dacca. No. 8945L.A.—22nd June 1936.—Whereas it appears to the Governor in Council that land is required to be taken by Government at the expense of the Dacca Municipality for a public purpose, viz., for opening out a mehtars' passage at Keshab Chandra Banerjee Road in the town of Dacca, in the mahalla of Shabek Sharafatganj, Ward No. 1, thana Sutrapur, parganas Jahangirnagar and Shahaujial, Tappa Paril, district Dacca, it is hereby declared that for the above purpose a piece of land comprising parts of cadastral survey plots Nos. 25, 26 and 29, and measuring more or less, 0·0123 of an acre, is required within the aforesaid mahalla of Shabek Sharafatganj.

This declaration is made, under the provisions of section 6 of Act I of 1894, to all whom it may concern.

A plan of the land may be inspected in the office of the Collector of Dacca.

Rangpur.—No. 9115L.A. 26th June 1936.—Whereas it appears to the Governor in Council that land is required to be taken by Government at the public expense for a public purpose, viz., for widening and extending roads leading to Robertsonganj hat and park in the old Rangpur dairy farm, in the village of Alamnagar, jurisdiction list No. 96, thana Rangpur, pargana Koondi, district Rangpur, it is hereby declared that for the above purpose three pieces of land comprising plots Nos. 1, 2 and 3 and measuring, more or less, 1·24 acres, bounded on the-

Plot No. 1 :

North—By the lands of Bhairlal Surani and Behari Nunia,

East—By the boundary of old Rangpur dairy farm,

South—By the lands of the Standard Oil Company, Behari Nunia and Eastern Bengal Railway,

West—By the district board road,

Plot No. 2 :

North—By the railway land,

East—By the lands of the old Rangpur dairy farm,

South—By the lands of Sachin Kundu, Burmah Oil Company and Padmarani Debi,

West—By the Rangpur district board road,

Plot No. 3 :

North—By the lands of the old Rangpur dairy farm,

South—By the district board road,

East and West—By the lands of Satya Brata Banarji, Gobinda Barman, Debabrata Maitra and Subodh Ranjan Maitra,

are required within the aforesaid village of Alamnagar.

This declaration is made, under the provisions of section 6 of Act I of 1894, to all whom it may concern.

A plan of the land may be inspected in the office of the Collector of Rangpur.

Dacca.—No. 9134L.A.—26th June 1936.—Whereas it appears to the Governor in Council that land is required to be taken by Government at the expense of the Dacca district board for a public purpose, viz., for the approach road to the Putia Bridge in mauzas Kamargaon and Munseferchar, pargana Tappa Maheswardi, zilla Dacca, it is hereby declared that for the above purpose a piece of land measuring, more or less, 2·12 acres, and comprising cadastral survey plots Nos. 1591 and 1592 and part of cadastral survey plot No. 1593 of mauza Kamargaon and cadastral survey plots Nos. 2 and 48 and parts of cadastral survey plots Nos. 49 and 50 of mauza Munseferchar, are required within the aforesaid mauzas of Kamargaon and Munseferchar.

This declaration is made under the provisions of section 6 of Act I of 1894, to all whom it may concern.

A plan of the land may be inspected in the office of the Subdivisional Officer of Narainganj.

Dacca. — No. 9137L.A. — 26th June 1936.— Whereas it appears to Governor in Council that land is required to be taken by Government at the expense of the Rarikhal-Majpara union board for a public purpose, viz., for connecting a road from cadastral survey plot No. 77 to cadastral survey plot No. 3332 in the village of Rarikhal, parganas Jahangirnagar, Rasulpur and Bikrampur, zilla Dacca, it is hereby declared that for the above purpose a piece of land measuring, more or less, 3·07 acres, and comprising parts of cadastral survey plots Nos. 76, 103, 102, 104, 106, 107, 108, 109, 123, 124, 125, 139, 138, 135, 147, 148, 152, 153, 184, 131, 154, 155, 182, 197, 198, 222, 231, 228, 230, 240, 239 and 238 is required within the aforesaid village of Rarikhal.

This declaration is made, under the provisions of section 6 of Act I of 1894, to all whom it may concern.

A plan of the land may be inspected in the office of the Subdivisional Officer of Munshiganj, Dacca.

Burdwan.—No. 9156L.A.—26th June 1936.— Whereas it appears to the Governor in Council that land is required to be taken by Government at the public expense for a public purpose, viz., for approach road to cart bridge at mile 1 chainage 45 and 93 feet of distributary No. 10, branch canal, Damodar Canal Project, in the village of Bamunara, jurisdiction list No. 27, thana Bhatar, pargana Burdwan, district Burdwan, it is hereby declared that for the above purpose two pieces of land comprising parts of cadastral survey plots Nos. 106 and 515 and altogether measuring, more or less, 0·06 of an acre, are required within the aforesaid village of Bamunara.

This declaration is made, under the provisions of section 6 of Act I of 1894, to all whom it may concern.

A plan of the land may be inspected in the office of the Special Land Acquisition Officer, Burdwan, as well as in that of the Executive Engineer, Damodar Canal Division, Burdwan.

Burdwan.—No. 9165L.A.—26th June 1936.— Whereas it appears to the Governor in Council that land is required to be taken by Government at the public expense for a public purpose, viz., for approach road to the bridge at chainage 138 and 23 feet of distributary No. 10, branch canal, Damodar Canal Project, in the village of Jhujkadanga, jurisdiction list No. 44, thana Bhatar, pargana Azmatsahi, district Burdwan, it is hereby declared that for the above purpose two pieces of land comprising, parts of cadastral survey plot Nos. 26, 154 and 156, and altogether measuring, more or less, 0·035 of an acre, are required within the aforesaid village of Jhujkadanga.

This declaration is made, under the provisions of section 6 of Act I of 1894, to all whom it may concern.

A plan of the land may be inspected in the office of the Special Land Acquisition Officer, Burdwan, as well as in that of the Executive Engineer, Damodar Canal Division, Burdwan.

Burdwan.—No. 9168L.A.—26th June 1936.— Whereas it appears to the Governor in Council that land is required to be taken by Government at the public expense for a public purpose, viz., for approach road to cart bridge at chainage 47 and 30 feet and connecting the existing road up to chainage 36 and 45 feet of distributory No. 10, branch canal, Damodar Canal Project, in the village of Serua, jurisdiction list No. 39, thana Bhatar, pargana Azmatsahi, district Burdwan, it is hereby declared that for the above purpose two pieces of land comprising, parts of cadastral survey plots Nos. 2, 3, 5, 8, 9, 22, 23, 25, 29, 30, 48, 2007 and 2008 and altogether measuring, more or less, 0·41 of an acre, are required within the aforesaid village of Serua.

This declaration is made, under the provisions of section 6 of Act I of 1894, to all whom it may concern.

A plan of the land may be inspected in the office of the Special Land Acquisition Officer, Burdwan, as well as in that of the Executive Engineer, Damodar Canal Division, Burdwan.

Burdwan.—No. 9171L.A.—26th June 1936.— Whereas it appears to the Governor in Council that land is required to be taken by Government at the public expense for a public purpose, viz., for constructing road approaches at mile 8, chainage 7 and 50 feet of distributary No. 11, branch canal, Damodar Canal, Project, in the village of Amarun, jurisdiction list No. 99, thana Bhatar, pargana Mazafarsahi, district Burdwan, it is hereby declared that for the above purpose two pieces of land comprising parts of cadastral survey plot Nos. 1535, 1536, 1538 and 1539 and measuring altogether, more or less, 0·47 of an acre, are required within the aforesaid village of Amarun.

This declaration is made, under the provisions of section 6 of Act I of 1894, to all whom it may concern.

A plan of the land may be inspected in the office of the Special Land Acquisition Officer, Burdwan, as well as in that of the Executive Engineer, Damodar Canal Division, Burdwan.

Excluded Area.

NOTIFICATIONS.

Darjeeling.—No. 887T.R. - 19th June 1936. - Whereas an application was made by Messrs. Goenka and Company of Kurseong, district Darjeeling, for the construction of an aerial ropeway for the public carriage of animals and goods from Bijonbari to Darjeeling and *vice versa* in the district of Darjeeling, and whereas after due consideration of the objections made in respect to the draft order which was published under section 6 of the Bengal Aerial Ropeways Act, 1923 (Bengal Act VII of 1923), in notification No. 15646E.A., dated the 20th September 1935, at pages 1840-1842, Part I of the *Calcutta Gazette* of the 26th September 1935, the Government of Bengal are of opinion that the application should be granted subject to such restrictions and conditions as are specified in the said order. Now, therefore, the Governor in Council is pleased to make under section 7 of the Act the following order :—

Order.

Preliminary.

1. This order may be called the Bijonbari-Darjeeling Ropeway Order.

2. In this order, unless there is anything repugnant in the subject or context, the expression "the Act" means the Bengal Aerial Ropeways Act, 1923.

3. Messrs. Goenka and Company shall be the promoters for the purpose of this order and are in this order referred to as the promoters.

4. The ropeway the construction of which is authorized by this order shall be for the public carriage of animals and goods from Bijonbari to Darjeeling and *vice versa* in the district of Darjeeling and shall be constructed, maintained and worked subject to the provisions of the Act or the rules and orders from time to time in force thereunder.

6. No powers or rights shall be deemed to have been conferred on the promoters or to have been relinquished by Local Government except as is in this order expressly provided.

Construction of Ropeway.

6. The promoters shall raise the capital required for the construction of the ropeway within a period of twelve months from the date of the publication of this order under section 7 of the Act authorizing the construction and within eighteen months from the date of the said publication the promoters shall submit to Local Government the final profile drawing and a map showing the areas proposed to be acquired under the Land Acquisition Act, 1894 (I of 1894), and the location of the trestles, ropes and other appurtenances which are to be erected under section 14 of the Act and shall within thirty days of demand by the Collector deposit with the Collector such amount as he may require for giving possession of the land. The construction of the ropeway shall commence within six months from the date when the possession of the land is made over to the promoters.

7. The promoters shall complete the construction of the ropeway in accordance with the provisions specified in this order and also in accordance with the maps, plans, sections and drawings deposited by the promoters with the Local Government and approved by it within a period of eighteen months from the date of the commencement of the construction of the ropeway, and shall maintain the ropeway with all proper establishments, trestles, ropes, stations, offices, carriers and conveniences connected with it or required for the purpose thereof.

8. In the event of cessation under section 8 of the Act of powers given by this order the Local Government shall have the option of taking over the ropeway and carriers or parts thereof at a reasonable valuation to be determined by it.

9. The ropeway to be constructed under this order shall be of the monocable type with detachable carriers running from Darjeeling to Bijonbari within the district of Darjeeling being of a total length of 5 miles approximately and having a carrying capacity of about 4 tons per hour in each direction.

10. For the purposes of section 14 of the Act the promoters shall be required to acquire or to hold land and shall be bound to pay to the Collector in advance such sums of money as he may from time to time demand for the purpose of any acquisition of land under the Act, or for the purpose of paying compensation under the Act for removal of or damage to trees, crops or tea bushes or similar produces which may be removed or damaged during the construction or for the maintenance of the ropeway.

11. The promoters shall not without the consent of the Local Government sell or otherwise dispose of any land of which they may have been put in possession by the Local Government for the purposes of the ropeway.

12. The ropeway shall be constructed in accordance with drawings to be approved by the Local Government and the factor of safety in all cases, except in anchorages or foundation, shall not be less than 4. For foundation anchorages it shall be sufficient if the moment of resistance of the foundation exceeds the turning moment by 50 per cent. The factor of safety of 4 shall be obtained in the case of the rope by dividing the actual breaking stress of the rope by the maximum direct tension to which it will be subjected. Station gears, trestles and sheaves shall be so designed and placed that lubrication can be performed safely whilst the ropeway is in motion. The speed of the rope shall not exceed 120 yeards per minute.

13. Dwelling houses and attached court-yards lying within 15 feet on either side of the centre line of the ropeway shall either be acquired by the promoters or adequately protected by girder protection bridges.

14. The minimum clearance of the ropeway from the ground, except within the station limits, shall be 12 feet, and if in any place this clearance be less it shall be open to the Local Government to call upon the promoters to provide within three months fencing on both sides of the ropeway for such length where the clearance is less than 12 feet at the promoters' expense, and the promoters shall be bound to comply with all such requisitions. The minimum clearance of protection bridges over public roads having a width of not less than 10 feet shall be 16 feet.

15. The promoters shall at their own cost construct and maintain all such stations, trestles, sidings and all other works in addition to those specified in or authorised by this order and shall also employ and maintain all such establishments as the Local Government may from time to time consider to be expedient for the safe and efficient working of the ropeway or for the convenience or safety of the public. All such additional works shall be completed to the satisfaction of the Local Government and all the provisions of this order shall, so far as applicable, apply to such works.

Motive, power, speed and signals.

16. The carriers used on the ropeway may be moved by steam or internal combustion engines or by electric motors. All driving stations shall be fitted with hand and automatic brakes to keep the speed of the rope within the maximum limit of 120 yards per minute.

17. For the purpose of giving signals the promoters shall instal telephones at all terminal and intermediate stations to enable the ropeway to be stopped at any time.

Maintenance and working of ropeway.

18. The promoters shall not without the consent of the Forest Officer in charge of the district cut down or lop any tree growing along or by the side of the ropeway or lands under the control of such Forest Officer, provided that in the case of emergency the promoters may remove or lop branches or any portion of a tree which stands in such a manner as to be a source of danger or impediment to the ropeway traffic, and in any such case they shall, without loss of time, report their action for confirmation by the Forest Officer.

Traffic and traffic working.

19 The ropeway may be used for the purpose of public carriage of animals and goods and small live-stock such as pigs, sheep, calves and goats only. All animals and goods and such small live-stock, as aforesaid which will not, in the opinion of the ropeway management and of the Local Government, interfere with the proper and safe running of the ropeway or the safety of the staff or public shall be carried, but the management shall have the right to refuse to carry such animals or goods or live-stock as in its opinion are dangerous or obnoxious or beyond the capacity of the ropeway.

20. At the outset the maximum rate for the carriage of goods including poultry if packed in baskets is fixed at five annas per maund, but the Local Government reserves the right to increase or lower this rate and to fix different rates for traffic to and from intermediate stations For the purpose of assessing the rate to be charged in respect of such small live stock as aforesaid other than poultry packed in baskets, each animal shall be carried at a minimum rate of five annas as if it weighed one maund.

21. The Local Government or the district board of Darjeeling or the Darjeeling Municipality in order of preference at the discretion of the Local Government and with the previous sanction of the Local Government shall be

entitled to exercise the option to purchase the ropeway conferred by section 24 of the Act either on 31st day of March 1954 or on the 31st day of March in the last year of any subsequent period of ten years on payment of the value of all lands, buildings, works, materials, plant and apparatus of the promoters, suitable to and used by them for the purposes of the undertaking *plus* 20 per cent. of that value on account of compulsory purchase, such value in the case of difference or dispute to be determined by arbitration in accordance with rules framed from time to time under this Act.

22. The promoters are authorised with the previous approval of the Local Government to transfer their entire rights in this undertaking to any other company to be floated for the purpose of constructing and working the ropeway, and the consideration of such transfer shall be limited to the extent of the actual expenditure incurred by the promoters on this undertaking and in obtaining this order.

23. In case it be hereafter found that any portion of the alignment adopted by the promoters for the ropeway interferes with the location of any new lines of railway or roadway, or the extension of any existing line of railway or roadway, the alignment occupied by the ropeway shall be without undue delay, at the request of the Local Government abandoned in favour of the railway or the roadway and the ropeway shall be diverted or altered in such a way and in such a manner as shall appear to the Inspector appointed under section 11 of the Act or other officer duly appointed in this behalf by the Local Government to be fair and proper, provided that the actual cost incurred in this connection shall be borne by the authorities of the said railway or roadway.

24. The promoters shall adopt and apply all such improvements in the ropeway and in the carriers and appliances thereon as the Local Government may from time to time consider necessary or desirable for the safety or convenience of the public.

25. In the event of any work required by the Act or by this order or any order or orders issued from time to time under the Act or under any rule or rules framed thereunder to be done by the promoters is not done by them the Local Government may cause a notice to be served on the promoters requiring them within a period to be prescribed in the said notice to execute the said work; and if within the period so prescribed such requisition is not complied with, the Local Government may cause such work to be done and the cost thereof shall be recovered from the promoters. The certificate of the Inspector appointed under section 11 of the Act or other officer appointed by the Local Government in this behalf shall be conclusive evidence that all expenses referred to in such certificate have been incurred in carrying out such work and the promoters shall not be at liberty to dispute the same.

26. The promoters shall provide without unreasonable delay such statistics relating to the ropeway or to the traffic thereon as may from time to time be required by the Local Government.

27. It is hereby expressly provided that no concession granted under this order confers on the promoters any exclusive right as carriers over any part of the tract traversed by the ropeway.

Darjeeling.—No. 892T.R.—19th June 1936.—In exercise of the power conferred by clauses (*b*), (*e*), (*g*) and (*h*) of section 44 of the Bengal Municipal Act, 1932 (Bengal Act XV of 1932), as modified in its application to the district of Darjeeling, the Governor in Council is pleased to make the following rules with respect to municipalities in the district of Darjeeling:—

Rules for the election of Commissioners of Municipalities under the Bengal Municipal Act, 1932.

1. (*a*) In these rules unless there is anything repugnant in the subject or context—

(*1*) "election day" means the date fixed for an election under rule 2;

(*2*) a municipality not divided into wards shall be deemed to be a ward;

(*3*) "polling booth" means a structure permanent or temporary set aside within the polling enclosure for the recording of votes;

(*4*) "polling enclosure" means an enclosure or building set aside for the admission of voters under rules 23 and 24;

(*5*) "Registering Authority" means the Committee constituted under section 21 of the Act; and

(*6*) "the Act" means the Bengal Municipal Act, 1932 (Bengal Act XV of 1932).

(*b*) A person shall be deemed to be resident within the limits of a municipality if he—

(1) ordinarily lives within those limits; or

(2) has his family dwelling-house within those limits, and occasionally visits it; or

(3) maintains within those limits a dwelling-house ready for occupation in the charge of servants, and occasionally occupies it.

A person may be resident within the limits of more than one municipality at the same time.

2. (*1*) The Deputy Commissioner shall issue an order in writing fixing the date—

(*a*) (*i*) for a general election under section 24 (*3*), at least six months before the expiration of the fourth year referred to in sub-section (*3*) of section 24 of the Act or of the term of office of the Commissioners if it has been extended under sub-section (*5*) of section 56 of the Act,

(*ii*) for a general election under section 552 or under clause (*ii*), sub-section (*2*) of section 554 of the Act, at least six months before any such election, and

(*b*) for any other election or bye-election, as soon as possible on each occasion, but at least 50 days before any such election or bye-election.

(*2*) The Deputy Commissioner shall communicate the date fixed for any election to the Chairman who shall forthwith publish the same in the manner prescribed by section 507 of the Act.

(*3*) If the date so fixed is that of a general election the Commissioners at a meeting shall thereupon appoint a Committee (hereafter called "Registering Authority") under sub-section (*1*) of section 21 of the Act.

Preparation and publication of electoral rolls.

3. (*1*) The Registering Authority shall prepare in Form A appended to these rules a Preliminary Electoral Roll for the municipality containing the names of all persons qualified to vote under the Act and after causing it to be printed shall, not less than 120 days before the date fixed for a general election under section 24 of the Act, publish it at the municipal office and at such other places as it may think fit.

(*2*) The name of each voter shall be entered in the Preliminary and Final Electoral Rolls for the ward in which he ordinarily resides.

(*3*) In a municipality where a separate arrangement is made for recording the votes of female voters, separate Electoral Rolls, both preliminary and final, shall be prepared for male and female voters.

(*4*) As soon as the Preliminary Electoral Roll has been published, the Chairman shall give public notice, as widely as possible, within the municipality that the roll has been prepared and may be inspected at the municipal office during working days and hours and shall state in the notice at what other places it may be inspected:

Provided that if any public holiday (besides Sundays) intervene between the date of publication of the Preliminary Electoral Roll and the last date of filing claims or objections under rule 8, the Roll shall be kept ready for inspection by the public even on those days between the hours 10 a.m. and 5 p.m.

4. Within 30 days after the announcement of the date of a general election within a municipality, any company, body corporate, firm or other association of individuals or any joint family, entitled to vote

through one of its members as its representative, shall send a letter to the *Registering Authority* stating the qualification entitling it to vote and the name of the person who will vote on its behalf.

If more than one member of a joint family are entitled to vote the names of such members shall be included in such letter.

Any person entitled to vote under clauses (*b*) and (*c*) of section 23 (*2*) (*iii*) shall also send a letter to the Registering Authority stating his qualification.

5. The Registering Authority may by an order in writing appoint suitable persons to assist it in preparing the Preliminary Electoral Roll in respect of any ward or wards.

6. Any paper to be delivered to or demanded by the Registering Authority or the Chairman under these rules shall be deemed to have been delivered to the Registering Authority or to the Chairman if it is delivered to any officer of the municipalty authorised in this behalf at the municipal office during working hours, and the Chairman shall by an order in writing so authorise an officer and have a copy of such order pasted on the municipal notice board for the information of the public.

7. Any member of the Registering Authority may sign notices or orders on behalf of the Authority when so authorized.

8. Any claim for the insertion of a name in the Electoral Roll or any objection against any entry in the Preliminary Electoral Roll shall be preferred to the Registering Authority in respect of the Preliminary Electoral Roll within 21 days of its publication. The Registering Authority shall not entertain any claim or objection received after 5 p.m. on the 21st day:

Provided that if the 21st day is a Sunday or a public holiday, claims and objections may be filed till 5 p.m. the next opening day.

9. Any person (hereinafter called the objector) may file a claim or objection on behalf of any person interested:

Provided that the person filing the claim or objection is authorized in writing by the person interested on whose behalf such claim or objection is filed.

10. Any claim or objection shall be in writing and signed by the objector and shall state the grounds on which it is based, and where it relates to an entry in the Preliminary Electoral Roll shall give the reference to or the particulars of that entry.

11. (*1*) Every objector whose claim or objection is entertained under rule 8 shall be served with a notice by the Registering Authority specifying the place where and the time when his claim or objection will be heard and notifying him that he may there produce or cause to be produced by an agent authorized in writing such evidence as he may wish.

(*2*) When objection is made to the inclusion in the Preliminary Electoral Roll of the name of any person recorded therein, the Registering Authority shall serve on such person a notice stating the grounds

of such objection and specifying the place and the time fixed for the hearing of such objection and notifying him that he may there produce or cause to be produced by an agent authorized in writing such evidence as he may wish.

(*3*) Every such notice shall be in writing and shall be served (*a*) on the objector at the address given in his claim or objection or, failing such address, at the address entered in the Preliminary Electoral Roll, and (*b*) on a person to whom objection is taken under sub-rule (*2*) at the address given in the Preliminary Electoral Roll:

Provided that a notice may be served by the Registering Authority by sending it to the person concerned by registered post or even by ordinary post, if a certificate of posting is kept.

12. The Chairman shall cause to be published from time to time on the notice board at the municipal office a notice showing generally the dates on which and the places at which the Registering Authority will sit for hearing claims and objections.

13. The Registering Authority shall dispose of all claims and objections by the 30th day after the last day of filing such claims and objections under rule 8.

It shall be the duty of a Chairman or Executive Officer or Secretary to produce all relevant or necessary documents or papers in his power and otherwise render necessary assistance to the Registering Authority in the discharge of its duties.

14. On the date which is fixed for the hearing or to which the hearing may be adjourned, the Registering Authority shall hold a summary enquiry into the claims or objections preferred, and after considering any evidence produced under rule 11 or 13 shall record orders either allowing or disallowing the claims or objections. For the purposes of the enquiry the Preliminary Electoral Roll as published shall be presumed to be correct and complete until the contrary has been proved.

15. (*1*) The Registering Authority shall then cause the roll to be amended in accordance with any orders passed under rule 14 and shall endorse the amendments in token that this has been done.

(*2*) The roll thus amended shall be the Final Electoral Roll, and after being printed and, if necessary, renumbered serially, shall, not less than 45 days before the election day, be published in the same manner as the Preliminary Electoral Roll.

16. The Final Electoral Roll shall remain valid for all fresh elections and by-elections held under sections 26, 42 and 58 of the Act:

Provided that for the purpose of such elections, held during each year, subsequent to that in which the general election was held, the Commissioners shall, during the month of April of each such year, appoint a Registering Authority for the correction of the Electoral Roll, by including in it the names of all persons, not already on the Roll, who possess the necessary qualifications for being voters for the year, and by exclusion therefrom of the names of such persons who have since died or otherwise become disqualified for being voters for that year. The Registering Authority, as soon as it is appointed,

shall, for this purpose, publish a notice calling for claims for the inclusion of names and objections against any entry in the existing Roll. For the disposal of the claims and objections the provisions of rules 8 to 15 (*1*) shall be held to be applicable so far as possible. The corrections thus made shall be printed and annexed to the existing Roll and the Roll thus corrected shall be published at the municipal office and shall at all times be open to inspection by the rate-payers at the municipal office. All persons whose names have been included in the corrected Roll shall be entitled to vote at such election held during the year:

Provided further that a fresh Electoral Roll shall be prepared and published for each general election held under sections 24, 552 and 554 (*2*) (*ii*) of the Act.

Nomination and Registration of candidates.

17. (*1*) Not less than 45 days before the election day the Commissioners shall fix for the nomination of candidates a date which shall not be less than 35 days before the election day. On or before the date of nomination so fixed every candidate for election shall cause to be delivered to the Chairman a nomination paper in Form B annexed to these rules.

(*2*) No nomination paper shall be valid if it is not signed by the candidate, or if it does not give the particulars required in columns 2, 3, 4 and 5 of the said form, or if it is not signed in columns 6 and 7, respectively, for each ward for which the candidate proposes to stand by at least one voter of each such ward as proposer and one voter of each such ward as seconder of the candidate or unless accompanied by a receipt for the deposit of the amount required by section 25 of the Act.

(*3*) Not less than 32 days before the election day the Chairman shall publish a notice in Form C annexed to these rules at the municipal office, fixing the time at and date on which the nomination papers will be scrutinised by him, such date being not less than 26 days before the date fixed for the election.

(*4*) At the time and on the date so fixed, the Chairman shall, at the office of the municipality, scrutinise all nomination papers in the presence of the candidates or their agents if they appear, and shall register as candidates all those whose nomination papers are found to be valid.

(*5*) Not less than 25 days before the election day the Chairman shall publish at the municipal office a list of the candidates registered under sub-rule (*4*). These candidates shall be deemed to be registered as such from the date of publication of the list.

18. Any candidate may withdraw his candidature by a notice in writing which must be subscribed by him and be sent to the Chairman within three days of the date of his registration as a candidate under rule 17(*5*) or rule 20(*2*), as the case may be. A candidate who has withdrawn his candidature shall not be allowed to cancel the withdrawal or to be renominated as a candidate for the same election.

19. As soon as possible after receipt of a notice of withdrawal under rule 18 the Chairman shall cause written intimation thereof to be published in some conspicuous place in the municipal office, and, if the municipality has been divided into wards, also in the ward to which the matter relates.

20. (*1*) If any person who has filed a nomination paper under rule 17(*1*) finds that his name is not included in the list of candidates published by the Chairman under rule 17(*5*) or disputes the right of any other candidate to be on such list, he may appeal to the Deputy Commissioner in writing within three days of the date of publication of such list. The Deputy Commissioner shall make such order as to the insertion or omission of the name as appears to him to be just, and shall forward a copy of his order to the Chairman so as to reach him not less than 15 days before the date of the election; and the Chairman shall on receipt of the order amend the list, note upon it the date of such amendment and forthwith publish at the municipal office and, if necessary, in the respective ward or wards, the amendments made in the list.

(*2*) A person whose name has thus been newly inserted in the list shall be deemed to be registered as a candidate from the date of such insertion.

(*3*) The order of the Deputy Commissioner shall be final.

21. Not less than ten days before the date fixed for the election the Chairman shall publish at the municipal office a revised list of candidates containing all the alterations and amendments made in such original list whether by the order of the Deputy Commissioner under rule 20 or in consequence of the withdrawals of candidates under rule 18. The revised list thus published shall be the final list of candidates for the election.

Conduct of Election.

22. (*1*) In any ward all registered candidates shall be declared to be duly elected if their number is not more than the number of vacancies.

(*2*) In such cases, the declaration shall be made by the Chairman in writing, against the name of the candidate concerned, in the final list of candidates published under rule 21.

(*3*) If the number of registered candidates is greater than the number of vacancies, a poll shall be held.

23. (*1*) Before the date of publication of the final list of candidates under rule 21, the Commissioners at a meeting shall fix the place or places (hereinafter referred to as polling centres) at which the poll shall be held on the election day and the hours between which voters shall be admitted into the polling enclosures:

Provided that if they fail to do so, the Chairman shall fix such hours and such polling centres.

(*2*) The poll shall be held at the time and at the polling centres so fixed:

Provided that where it is considered necessary, separate polling centres may be fixed for the recording of votes by female voters.

(*3*) Notice of such time and such polling centres shall be given by beat of drum and by the publication of notices at the municipal office at the same time as the publication of the final list of candidates under rule 21.

24. After the hours mentioned in the notice referred to in rule 23, no person shall be admitted within the polling enclosure but the votes of all duly registered voters who are already within the enclosures shall be recorded.

25 Each voter shall be entitled to vote for the ward in respect of which his name has been registered, and for no other, and to give as many votes as there are vacancies for each ward for which he is thus entitled to vote:

Provided that he shall not give more than one vote on the same voting paper to any one candidate.

26. (*1*) There shall be in each ward at least one polling centre.

(*2*) Where there are more than one polling centre in a ward the Commissioners shall cause a notice to be published showing the names and serial numbers as given in the Final Electoral Roll of persons whose votes will be recorded at any specified polling centre in the ward.

(*3*) The Chairman may, if he thinks necessary, provide more than one polling booth in a polling centre and shall cause a notice to be published at the gate of each polling booth showing the serial numbers, as given in the Final Electoral Roll of persons whose votes will be recorded at the booth.

(*4*) The Commissioners at a meeting shall appoint a polling officer who is neither himself a candidate for election nor the agent of a candidate to preside over the election at each polling centre, and where there are several polling centres in one ward shall declare one of the polling officers to be chief polling officer.

(*5*) If a polling officer for any reason fail to attend, the Chairman shall appoint another fit and proper person who is not himself a candidate or the agent of a candidate, to take his place.

(*6*) To assist the polling officer, there shall be appointed by the Commissioners at a meeting an Election Committee consisting of not more than five ratepayers of the ward who are not themselves candidates or agents of candidates. No election shall be void because any or all of the members of the committee fail to attend: if less than three members attend, the polling officer may appoint other ratepayers not being themselves candidates or agents of a candidate up to the number of three and the persons thus appointed shall then be deemed to be members of the Election Committee.

27. (*1*) On the morning of the election day the Chairman shall supply the polling officer with the following:—

(*a*) a ballot box provided with an aperture for receipt of voting papers;

(*b*) an instrument for stamping the official mark on such papers;

(*c*) a copy of the Final Electoral Roll, with the particulars prescribed in rule 26 (*2*);

(*d*) a bound book or books containing as many voting papers serially numbered in foil and counterfoil as there are voters entered in the Final Electoral Roll for that polling centre, and other persons entitled under rule 34 (*1*) to vote at that polling centre.

(*2*) The Chairman shall cause to be provided at each polling centre sufficient writing materials with which voters may mark the voting papers.

(*3*) The official mark shall be kept secret until the commencement of the polling.

28. The voting paper shall be printed in English or both in English and Bengali in Form D annexed to these rules. The names of candidates in English shall be in alphabetical order. When the voting paper is printed in both the languages the name shall be printed in Bengali below that in English in each case.

29. With the object of safeguarding the secrecy of the ballot and of preventing undue crowding, the Chairman shall divide each polling booth into two rooms or compartments, hereafter called the inner and outer compartments. Votes shall be recorded in the inner compartment.

30. (*1*) On the election day the polling officer shall admit to the outer compartment of the polling booth the candidates and such agents as may be selected by the candidates, to assist in the identification of voters, provided that there shall be present at one time, in addition to the candidates, not more than one agent of each candidate.

(*2*) Only voters, members of the Election Committee and such other persons (if any) as the polling officer may by special directions admit, shall be allowed to enter the inner compartment of the polling booth.

(*3*) No candidate or agent of a candidate shall be admitted into the inner compartment except for recording his own vote.

(*4*) The polling officer shall regulate the number of voters to be admitted at any one time into either the inner or the outer compartment.

31. Immediately before the commencement of the poll the polling officer shall satisfy such persons as may be present in the outer compartment that each ballot box is empty and shall then lock it and place upon it his seal in such manner as to prevent its being opened without breaking such seal.

32. The candidates and their agents shall not speak to or address any intending voter in the polling booth, but may submit to the polling officer objections to a voter on any of the following four grounds:—

(*1*) That his name is not on the Final Electoral Roll of the ward in respect of which the election is being held.

(*2*) That his claim to be a certain voter shown on the Final Electoral Roll is false.

(*3*) That he has already voted.

(*4*) Where there is more than one polling centre in a ward, that under rule 25 he is not entitled to record his vote at the polling centre in respect of which the objection is raised.

33. The procedure for recording a vote shall be as follows:—

(*i*) There shall be no voting by proxy.

(*ii*) As each intending voter enters the outer compartment, his name and his number in the Final Electoral Roll shall be called out, so that everybody present can hear them.

(*iii*) No objection to an intending voter shall be entertained except on the grounds mentioned in rule 32.

(*iv*) Any objection shall be summarily decided by the polling officer, who may for this purpose take such evidence as may be available on the spot.

(*v*) If after taking such evidence the polling officer disallows the objection or if no objection is raised, he shall hand the voter the foil of a voting paper for the ward and shall allow him to proceed to vote.

(*vi*) Immediately before a voting paper is delivered to a voter, it shall be marked on the back with the official mark and an indication shall be placed in a copy of the Electoral Roll against the number of the voter to denote that he has received a voting paper, but no note shall be made of the particular voting paper which he has received.

(*vii*) The number of the voter in the Final Electoral Roll shall be marked on the counterfoil of his voting paper.

(*viii*) A voter who has received a voting paper shall forthwith be directed, by the polling officer or a person (not being a candidate or his agent) deputed by the polling officer for this purpose, to a place set apart therefor in the inner compartment and shall there mark a cross, within the space headed "voter's mark" on the voting paper against the name of any candidate for whom he intends to vote. He shall then conceal his vote by folding the voting paper and shall put the paper so folded into the ballot box. He shall vote without undue delay and shall quit the polling enclosure as soon as he has put the voting paper into the ballot box.

(*ix*) If the voter is unable to read the voting paper or to make a cross thereon, the polling officer shall mark the vote on the voting paper according to the direction of the voter at the place set apart within the inner compartment under clause (*viii*) of this rule, provided that if the voter so request he shall do so in the outer compartment. The voter shall then put the voting paper folded as prescribed in clause (*viii*) into the ballot box.

34. (*1*) A polling officer or a member of an Election Committee at a polling centre where he is not entitled to vote shall be allowed to record his vote there on his producing a certificate on a ballot paper from the polling officer of another polling centre that he is entitled to vote at such other centre.

(2) His vote shall be recorded in the manner prescribed in rule 33 except that, his voting paper after being filled in and folded as there prescribed shall be placed, with the certificate, in a sealed envelope by the polling officer and sent to the polling officer of the other polling centre who shall remove it from the envelope and put it in the appropriate ballot box.

35. It shall be the duty of the polling officer and the Election Committee to see that votes are recorded with the utmost secrecy, that the number on the voting paper handed over to a voter is not divulged to any other person, that no persons are admitted to either compartment except under these rules and that persons who have recorded their votes or against whom objections have been allowed are caused to leave immediately. It shall also be their duty to see that these rules and any special directions given by the polling officer thereunder are strictly observed.

36. (1) On the conclusion of the poll, the polling officer shall, with the assistance of the Election Committee, in the presence of the candidates or their agents, if any—

(a) satisfy himself that the seals affixed to the ballot boxes under rule 31 are intact, and either

(b) forthwith, when there is only one polling centre in the ward, open the ballot box and scrutinise the votes in accordance with rule 37, or

(c) when there are several polling centres in the ward send to the chief polling officer the ballot-boxes and the books of counterfoils and unused foils of voting papers and the marked copy of the Electoral Roll properly sealed with his own seal and the seal of such candidates or agents as may desire to affix their seal.

(2) The chief polling officer shall thereupon with the assistance of the Election Committee, in the presence of the candidates or their agents, if any, satisfy himself that the seals are intact, open the ballot boxes and scrutinise the votes in accordance with rule 37.

37. Any voting paper not marked, marked otherwise than with a cross, or marked elsewhere than in the space provided for the purpose, or on which more crosses are marked than there are vacancies, or on which a cross is so placed as to make it doubtful to which candidate the vote has been given, or on which any mark is made by which the voter may be identified shall be invalid. A note to this effect shall be made upon it by the polling officer and it shall not be included in the count.

38. When the voting papers have been scrutinised the polling officer or chief polling officer shall with the assistance of the Election Committee, in the presence of the candidates or their agents, if any, count the valid votes and declare to be elected in any ward the candidate or candidates to whom the highest number of votes has been given. If there be an equality of votes and if the number of vacancies does not admit of all

the candidates who have obtained an equality of votes being elected, he shall by drawing lots in such manner as he may determine select one of such candidates whom he shall declare to be elected.

39. The polling officer or chief polling officer shall forthwith, if not himself the Chairman, report in writing the result of the election to the Chairman.

40. When a candidate has been elected for more than one ward,—

(*a*) he shall be declared by the Chairman to have been elected for such ward, if any, out of those wards, in which the election has been uncontested,

(*b*) otherwise, within five days from the date of the election, he shall declare which of such wards he will represent:

and if he fails to make such declaration, the Chairman shall forthwith declare the ward which such candidate shall represent. In either case such candidate shall be held to be elected in the ward in respect of which a valid declaration has been made under this rule and in every other ward for which the said candidate has been elected the result of the election shall be determined as if no votes had been recorded for him:

Provided that, if there is no other candidate for whom votes have been recorded to fill the vacancy thus caused, a fresh election shall be held.

41. A second election, under section 26 of the Act, shall begin at the stage from which the original election failed, *e.g.*, if the election failed at the time of polling a fresh poll only shall be held or if the election failed for want of candidates, fresh nominations shall be called for.

42. When the voting papers have been scrutinised and counted the polling officer or the chief polling officer, as the case may be, shall forthwith replace them in the ballot box from which they were taken and seal it in the manner prescribed by rule 31 and rule 36 (*I*) (*c*). He shall also seal up the books of counterfoils and unused foils of voting papers and also the copy of the marked Electoral Roll, with his own seal and the seal of such candidates or their agents as may desire to affix them. If he is not himself the Chairman, he shall make them over with the ballot box to the Chairman to be kept in safe custody until the books and the voting papers are destroyed under rule 43.

43. On the expiry of 30 days from the date of the declaration of the result of the election, or, if an election petition has been filed under section 36 of the Act, as soon as possible after the disposal of the petition, the voting papers in the ballot boxes and the sealed books containing unused voting papers and counterfoils shall be destroyed in the presence of such municipal commissioner or officer as the Commissioners at a meeting may appoint for this purpose.

44. The list of duly elected candidates for the whole municipality shall be forwarded by the Chairman through the Deputy Commissioner to the Commissioner of Division for publication by him in the *Calcutta Gazette*.

45. In a municipality where the Deputy Commissioner is the Chairman, the duties assigned to the Chairman in these rules shall be discharged by the Vice-Chairman.

46. If, in any case, such a course appears to the Local Government to be necessary, it may direct that the Deputy Commissioner shall perform all or any of the duties assigned by these rules to the Chairman or the Commissioners at a meeting.

47. No person having directly or indirectly by himself or his partner any share or interest in any contract or employment with, by or on behalf of the Commissioners, or holding any office of profit under the Commissioners, shall directly or indirectly, engage in canvassing for votes or otherwise assist in the election of any candidate otherwise than by giving his own vote.

48. All costs incurred in the preparation, printing and publication of the Electoral Rolls, the publication of notices, the holding of elections, or the taking of any other necessary action under these rules, shall be payable by the Commissioners out of the municipal fund.

FORM A.

(Rule 3.)

Preliminary/Final Electoral Roll for male/female voters for.....
ward.....of ..... municipality.

Serial No	Number in assessment list	Name of voter	Father's name or in the case of a female voter, husband's name	Age	Period of residence	Address	Particulars of qualification	Remarks.
1	2	3	4	[illegible]	6	7	8	9

Registering Authority.

FORM B.

(Rule 17.)

Nomination Paper.

Serial No.	Name of candidate and his serial number in the Final Electoral Roll (Form A) with the particulars of the ward in which he is registered.*	Denomination (*e.g.* Hindu, Muhammadan, etc.).	Address.	Ward or wards in which election is sought.	Signature of voter proposing, and his serial number in the Final Electoral Roll (Form A.)*	Signature of voter seconding, and his serial number in the Final Electoral Roll (Form A.)*	Remarks.
1	2	3	4	5	6	7	8

*State whether the number refers to the Electoral Roll for males or females.

Signature of the candidate.

Date.....193.....

(perforated)

.....

Certificate of delivery.

The nomination paper of....., a candidate for election from ward No.....of.....municipality was delivered to me on (date).....at (hour).....

Signature.

FORM C.

Notice under rule 17.

Nomination papers of all candidates for election received under rule 17 (*1*) will be scrutinised by the Chairman on.....at the municipal office between the hours of..... Candidates and other interested persons may be present at the scrutiny.

Chairman.

.....Municipality.

Date.....*193*.....

FORM D.

(Front.)

(Rule 28.)

Voting paper No.....

Number of vacancies.....

Counterfoil.

Voting paper No.*

Voter's number in the Final Electoral Roll.

(Perforated)

Foil.

Serial No.	Candidate's name.	Voter's mark.
(1) (১)		
(2) (২)		
(3) (৩)		
(4) (৪)		

*The serial number should be printed on the face of the counterfoil and on the back of the voting paper.

INSTRUCTIONS.

1. As many votes as there are vacancies may be given but not more than one vote shall be given to any one candidate.
2. Votes in excess of the number of vacancies may not be given.
3. A cross (×) should be placed opposite the name or names of candidate or candidates for whom it is desired to vote, a cross being made for each vote.

(Back.)

Voting paper No.....

(*e*) The voting paper shall be invalid if the mark × is placed opposite the name of more than one candidate, or if it is so placed as to render it doubtful to which candidate such mark is intended to apply.

(*f*) Each Commissioner after placing the mark × on the voting paper shall fold the counterfoil so as to conceal the votes recorded, sign his name on the back of the counterfoil and then hand the paper to the President. Without such folding of the counterfoil or signature the voting paper shall be invalid.

(*g*) The President shall have the right of participating in the election of the Chairman and shall similarly record his vote.

(*h*) As soon as all the voting papers have been delivered to the President, he shall, in the order hereinafter specified :—

(*1*) reject any voting paper which is unsigned or of which the counterfoil is not properly folded as prescribed in clause (*f*) ;

(*2*) tear off the counterfoils containing the signatures and place them apart from the voting papers proper ;

(*3*) reject any voting paper which is irregularly marked ;

(*4*) read out the names of the candidates against which the mark × has been validly made ;

(*5*) count the votes ; and

(*6*) declare the candidate to whom the largest number of votes has been given to be elected as Chairman of the Municipality.

(*i*) In the case of an equality of votes the President shall have a casting vote.

4. The Commissioner appointed under sub-section (*2*) of section 59 shall preside at the meeting for the election of the Vice-Chairman as well as that of the Chairman, and the same procedure shall apply as for the election of the Chairman :

Provided that, when the Chairman of a municipality is appointed by Government he shall preside at the election of the Vice-Chairman.

5. When a meeting is held under sub-section (*3*) of section 45 the procedure laid down in rule 3 shall be followed. The Vice-Chairman shall preside over such a meeting unless he is a candidate for the office of Chairman. If the Vice-Chairman is absent or is a candidate for such office, the Commissioners shall select one of their number, who is not a candidate for the office in accordance with the procedure laid down in rules 1 and 2, to preside over the election.

6. If any Vice-Chairman is unable to complete his full term of office, or is granted leave under sub-section (*1*) of section 55, the vacancy shall be filled by an election, to be held, within twenty-one days from the date of occurrence of the vacancy, at a meeting in which the Chairman or in his absence, a person, who is not a candidate for the office of the Vice-Chairman and is elected by the Commissioners from among themselves in accordance with the procedure prescribed in rules 1 and 2, shall preside. The election of the Vice-Chairman shall be held in accordance with the procedure prescribed in rule 3.

Darjeeling.—No. 900T.R.—19th June 1936.—In exercise of the power conferred by clause (*f*) of section 44 of the Bengal Municipal Act, 1932 (Bengal Act XV of 1932) as modified in its application to the district of Darjeeling, the Governor in Council is pleased to make the following rules with respect to municipalities in the district of Darjeeling :—

Rules regulating the procedure to be followed by a Judge in inquiring into election petitions.

1. In these rules -

(*i*) "Act" means the Bengal Municipal Act, 1932 ;

(*ii*) "Election petition" means a petition filed under section 36 of the Act ;

(*iii*) "Judge" means the District Judge or any judicial officer who is empowered under the Act to inquire into election petitions.

2. (1) An election petition shall —

(*a*) contain a statement in concise form, of the material facts on which the petitioner relies and the particulars of any corrupt practice which he alleges ;

(*b*) state the petitioner's number on the electoral roll, and the name of the ward or constituency of the municipality (or the name of the municipality, if it is not divided into wards or constituencies) to the election of the Commissioners of which the petition relates : and

(*c*) be signed by the petitioner and verified in the manner prescribed for the verification of pleadings in the Code of Civil Procedure, 1908.

(2) If the provisions of section 36 of the Act regarding deposit of security are not complied with the Judge shall dismiss the petition.

(3) If the provisions of any of the clauses of sub-rule (*1*) are not complied with the Judge shall return the petition for such amendment as may be necessary, and if the amendment is not made within such time as may be allowed -which shall not exceed a fortnight -the Judge may dismiss the petition.

3. For the purposes of court-fees, an election petition shall be treated as a plaint in a civil suit.

4. On the receipt of an election petition the Judge shall, as soon as may be, cause a copy of the petition to be served on the person the validity of whose election is called in question in the petition and on the Chairman of the Commissioners of the municipality concerned.

5. Every election petition shall be inquired into by the Judge, as nearly as may be, in accordance with the procedure applicable under the Code of Civil Procedure, 1908, to the trial of suits ; provided that it shall only be necessary for the Judge to make a memorandum of the substance of the evidence of any witness examined by him.

6. (1) No election petition shall be withdrawn without the leave of the Judge.

(2) If there are more petitioners than one, no application to withdraw a petition shall be made except with the consent of all the petitioners.

(3) When an application for withdrawal is made, notice thereof fixing a date for the hearing of the application shall be given to all other parties to the petition.

(4) If the application is granted—

(*a*) the petitioner shall be ordered to pay the costs of the respondent theretofore incurred or such portion thereof as the Judge may think fit, and

(*b*) such withdrawal shall be communicated to the Chairman of the Commissioners of the municipality concerned.

7. An election petition shall abate on the death of a sole petitioner or of the survivor of several petitioners, and such abatement shall be communicated to the Chairman of the Commissioners of the municipality concerned.

Darjeeling.—No. 904T.R.—19th June 1936.—In exercise of the power conferred by clause (*h*) of section 44 of the Bengal Municipal Act, 1932 (Bengal Act XV of 1932), as modified in its application to the district of Darjeeling, the Governor in Council is pleased to make the following rule with respect to municipalities in the district of Darjeeling :—

Rule regarding refund of deposits made by candidates for election as Municipal Commissioners.

A deposit made under sub-section (*1*) of section 25 by a candidate for election as a Commissioner shall, if it is not forfeited under sub-section (*3*) of the said section, be returned to the candidate making the deposit after the declaration of the result of the election.

Darjeeling.—No. 908T.R.—19th June 1936.—The following draft of a rule which in exercise of the power conferred by clause (*c*) of section 44 of the Bengal Municipal Act, 1932 (Bengal Act XV of 1932), as modified in its application to the district of Darjeeling, the Governor in Council proposes to make with respect to municipalities in the district of Darjeeling, is published for the information of persons likely to be affected thereby.

2. The draft rule will be taken into consideration on or after the 20th July 1936, and any objection or suggestion with respect thereto which may be received by the undersigned through the Deputy Commissioner, Darjeeling, before that date will be duly considered :—

Draft rule.

The minimum sum, the payment of which in respect of municipal fees and taxes would entitle a person in a municipality to vote at an election of Commissioners, under sub-clause (*a*) of clause (*iii*) of sub-section (*2*), or under

clause (*ii*) of sub-section (*5*) of section 23 of the said Act, shall be an aggregate amount of not less than rupees three in the case of the Darjeeling Municipality and rupee one in respect of the Kurseong Municipality.

3. This cancels notification No. 3765E.A., dated the 4th March 1936, published at page 518, Part I of the *Calcutta Gazette* of the 12th March 1936.

Darjeeling. No. 912T.R.—19th June 1936.—In exercise of the power conferred by clause (*i*) of section 44 of the Bengal Municipal Act, 1932 (Bengal Act XV of 1932), as modified in its application to the district of Darjeeling, the Governor in Council is pleased to make the following rules, with respect to municipalities in the district of Darjeeling :—

Rules.

1. The minimum amount of rent, the payment of which during a financial year would entitle a person to vote at an election of Commissioners, under sub-clause (*d*) of clause (*iii*) of sub-section (*2*) of section 23 of the Act, shall be sixty-five rupees in the case of the Darjeeling Municipality, and thirty-six rupees in the case of Kurseong Municipality.

2. Each house-holder within the aforesaid municipalities shall submit to the municipality once in every quarter a return showing the names of his tenants together with the rents paid by them. No tenant whose name does not appear in any such returns shall be entitled to be registered as a voter on the basis of house-rent qualification.

Darjeeling. No. 916T.R. 19th June 1936. In exercise of the power conferred by sub-section (*2*) of section 24 of the Bengal Municipal Act, 1932 (Bengal Act XV of 1932), as modified in its application to the district of Darjeeling the Governor in Council is pleased to issue the following order :-

Order.

The first general elections under the Bengal Municipal Act, 1932 (Bengal Act XV of 1932), in the municipalities of Darjeeling and Kurseong shall be governed by the rules, published under notifications Nos. 892T.R., 908T.R. and 912T.R., dated the 19th June 1936.

2. This cancels notification No. 3773E.A., dated the 4th March 1936, published at page 521, Part I, of the *Calcutta Gazette* of the 12th March 1936.

Excise.

NOTIFICATIONS.

No. 218T.Ex.—22nd June 1936.—In exercise of the powers under clause (*i*) of sub-section (*2*) and under sub-section (*3*) of section 18 of the Matches (Excise Duty) Act, 1934 (XVI of 1934), delegated under sub-section (*4*) of the said section to the Local Government by the Governor-General in Council in the Finance Department (Central Revenues) notification No. 40-Central Excises, dated the 1st December 1934, and without prejudice to the generality of the provisions made in this behalf in the Matches (Excise Duty) Order, 1934, the Governor in Council is pleased to make the following rules for the Presidency of Bengal :

Rules.

1. For the purposes of clauses 10 and 20 of the Matches (Excise Duty) Order, 1934, but without prejudice to the generality of the provisions of the said clauses the Collector or Inspecting Officer may—

(*i*) examine, test, measure, count or weigh any matches, splints, veneers or other materials for use in manufacturing matches found in a licensed place of manufacture ;

(*ii*) remove wrappings and open cases, packages or boxes or matches, splints or veneers ;

(*iii*) examine banderols and labels whether affixed to boxes or booklets or not ;

(*iv*) take samples of matches, splints, veneers, banderols and labels or of any other materials for use in manufacturing matches ; and

(*v*) call for, and examine, and take or call for extracts from all accounts, registers and other documents relating to matches, splints, veneers, banderols or labels.

2. A licensee or his agent shall, in the absence of any reasonable excuse, give all facilities to the Collector or Inspecting Officer in the performance of his duties for the purpose of inspection and examination, as provided for in these rules, and shall assist him with such number of men as may be required for the purpose.

3. If the Collector or any Magistrate competent to try offences punishable under the Matches (Excise Duty) Act, 1934 (XVI of 1934), or any officer specially empowered by the local Government by notification, upon information received, and after such enquiry, if any, as he thinks necessary, has reason to believe that any offence punishable under the said Act or any order, notification or rules made or issued thereunder has been or is likely to be committed or abetted, he may issue a warrant to search for any matches, splints, veneers, banderols, labels or accounts in respect of which the alleged offence has been or is likely to be committed or abetted, or any article or document which throws or is likely to throw any light on the alleged offence.

4. Officers empowered under rule 3 may, at any time, search or direct a search to be made in his presence for any articles for the search of which he is authorised to issue a warant.

5. (1) Articles seized under a warrant shall be forwarded to the officer who issued the warrant and in other cases to the Collector.

(2) When any articles seized cannot conveniently be conveyed before such officer, the person making the seizure shall, with all convenient despatch, take such measures as may be necessary for the safe custody of such articles and forthwith make a full report of all the particulars to his immediate superior.

6. When an officer other than the Collector makes any seizure or search he shall within twenty-four hours thereafter make a full report of all particulars of such seizure or search to the Collector within the local limits of whose jurisdiction the seizure or search was made.

7. (1) Save as in these rules otherwise expressly provided, the provisions of the Code of Criminal Procedure, 1898 (V of 1898), relating to searches and search warrants shall apply, so far as may be, to searches made and warrants issued under these rules.

(2) For the purposes of the said provisions of the said Code, a Collector or any officer specially empowered undr rule 3 shall be deemed to be a Court.

(3) Officers to whom a search warrant is directed or endorsed and the officers making searches or seizures under these rules, shall, for the purposes of the said provisions of the said Code, be deemed to be Police Officers.

8. Any breach of rule 2 shall be punishable with simple imprisonment for a term which may extend to one month, or with a fine which may extend to 200 rupees or with both.

No. 219T.Ex.—22nd June 1936.—In pursuance of rule 3 of the rules made by the local Government under clause (*i*) of sub-section (*2*) and under sub-section (*3*) of section 18 of the Matches (Excise Duty) Act, 1934 (XVI of 1934), and published with the notification in this department No. 218T. Ex., dated the 22nd June 1936, the Governor in Council is pleased specially to empower all officers of the Excise Department of the rank of a Superintendent of Excise or of an Inspector of Excise when holding charge of a district to issue search-warrants in accordance with the provisions of the said rule.

No. 619Ex.—25th June 1936.—In exercise of the power conferred by clause 34 of the Matches (Excise Duty) Order, 1934, and in supersession of this department notification No. 199T.A.I., dated the 24th May 1934, the Governor in Council is pleased to empower—

(1) all officers of the Excise and the Police Departments, not below the rank of Sub-Inspector, and
(2) all officers of the Land Revenue Department, not below the rank of Sub-Deputy Collector,

to search any place, vessel, cart or means of conveyance for matches liable to duty and to seize and remove or detain any matches which may appear to them to have been illegally imported or manufactured, or to have been issued from the manufactory or stocked or kept for sale in contravention of any direction or rule made under the Matches (Excise Duty) Act, 1934 (XVI of 1934).

Minister-in-charge: The Hon'ble Sir Bijoy Prasad Singh Roy, Kt.

Chittagong-Rajshahi. No. 177T.Ex. — 13th June 1936.—Babu Mukunda Prosad Sen, temporary Superintendent of Excise and Salt, Chittagong, is transferred to Naogaon, Rajshahi, *vice* Babu Kiran Chandra Basu.

Rajshahi-Chittagong. — No. 178T.Ex. — 13th June 1936. — Babu Kiran Chandra Basu, officiating Inspector in charge of Excise and Salt, Naogaon, is transferred to Chittagong, *vice* Babu Mukunda Prosad Sen.

J. B. KINDERSLEY,
Secy. to the Govt. of Bengal (offg.).

IRRIGATION DEPARTMENT.

NOTIFICATION.

No. 91. -24th June 1936. The Governor in Council is pleased to direct under section 63 of the Bengal Embankment Act, 1882 (Bengal Act II of 1882), that an estimate shall be made of the probable expenses to be incurred in respect of the repairs, maintenance and works connected therewith of the Bishnupur Zamindary Embankment in the Sadar subdivision of the Midnapore district for a period of twenty years commencing from 1st April 1938.

H. S. E. STEVENS,
Secy. to the Govt. of Bengal.

TREASURY NOTICES.

Tippera Treasury, the 19th June 1936.

Maulvi Mazharul Islam, Deputy Magistrate and Deputy Collector, has been placed in charge of the Tippera Treasury from the 19th June 1936, and is authorised to draw bills on other treasuries and banks from that day.

S. N. RAY, *Collector.*

Orders by the Deputy Accountant-General, Bengal.

Treasury Buildings, the 24th June 1936.

It is notified that the refund order book No. 179 containing 50 orders "Pink" is in use by the Income-Tax Office, Railway and Miscellaneous Salaries Circle, Calcutta, with effect from the 12th June 1936.

C. BHASKARAIYA,
Deputy Accountant-General, Bengal.

HIGH COURT NOTICES.

Civil.

The 19th June 1936.

No. 13825A.—Babu Sailendra Nath Mitra, munsif, under orders of transfer to Kushtia, in the district of Nadia, is vested with the powers of a Judge of a Court of Small Causes for the trial of suits cognizable by such a court up to the value of Rs. 100 within the local limits of the Kushtia munsifi.

No. 13828A.—In exercise of the powers delegated to the High Court by the notification of the Government of Bengal, No. 64J.D., dated the 30th April 1915, Babu Sailendra Nath Mitra, munsif of Kushtia, in the district of Nadia, is vested under Article 8 of the Second Schedule of the Provincial Small Cause Courts Act, 1887 (IX of 1887), with powers to try, under the Small Cause Court procedure, suits up to the value of Rs. 100 for the recovery of rents of homestead lands arising within the municipal area within his jurisdiction.

English Department.

The 22nd June 1936.

No. 13949A.—Babu Anukul Chandra Lahiri, munsif, under orders of transfer to Kushtia, in the district of Nadia, is vested with the powers of a Judge of a Court of Small Causes for the trial of suits cognizable by such a Court up to the value of Rs. 100 within the local limits of the Kushtia munsifi.

Appellate Side.

The 25th June 1936.

No. 14078A.—It is hereby notified for the information of those whom it may concern that the number of nominations for appointment as munsifs to be made by the High Court for 1937 is, approximately, 15.

2. The attention of intending candidates for nomination for munsifships is drawn to the rules regarding the qualifications and appointment of munsifs, published with the Government of Bengal, Judicial Department, notification No. 6097J., dated the 10th July 1935, at pages 1331-1335 of the *Calcutta Gazette* of the 18th *idem*.

3. Applications for nomination must reach the undersigned not later than the *15th October 1936* as prescribed by the Government of Bengal, Judicial Department, notification No. 4800J., dated the 18th June 1936.

4. Applications for copies of the prescribed form of application for admission to the Bengal Civil Service (Judicial) must be accompanied by the candidate's Matriculation Examination pass certificate or its equivalent.

5. Candidates who are not *under* 27 years of age on the 1st January 1937 will not be supplied with forms of application and their requests for such forms will not meet with any response from the Court.

6. No cognizance will be taken by the Court of representations from overage candidates for the relaxation of the age limit in their favour. Any candidate desirous of such relaxation must submit his representation to the Government of Bengal, Judicial Department, direct and not to or through the Court.

7. Candidates who have already applied for nomination this year and who will be *under 27* years of age on the 1st January 1937, must, if they desire their cases to be considered for nomination for 1937, apply afresh in the prescribed form with the certificates, etc., required under the rules and only the cases of those who do so will be considered.

8. Endeavour, in any form, to enlist support for his candidature will render the candidate ineligible for nomination and no candidate will be interviewed by the undersigned prior to his being called upon, if necessary, to appear for an interview with the Hon'ble Judge in charge of the English Department. Interviews will not be granted, also, by the undersigned to the parents, guardians or well-wishers of prospective candidates.

By order of the High Court,

E. S. SIMPSON, *Registrar.*

ORDERS BY COMMISSIONERS OF DIVISIONS.

Burdwan Division—Chinsura.

No. 4003J.G. — 19th June 1936. — Babu Hira Lal Roy, Sub-Deputy Collector and Circle Officer of Katwa, in the district of Burdwan, is granted, under rule 81 (*b*) (*ii*) of the Fundamental Rules, leave on average pay for six weeks, with effect from the 10th June 1936 or any subsequent date on which he availed himself of the leave.

No. 4009J.G.—19th June 1936.—Babu Karuna Nidhan Ghose, Sub-Deputy Collector and Circle Officer of Amta, in the district of Howrah, is granted under rule 81 (*b*) (*ii*) of the Fundamental Rules, leave on average pay for one month from 1st June 1936 or any subsequent date on which he availed himself of the leave.

L. B. BURROWS, *Commissioner.*

Birbhum, the 22nd June 1936.

No. 48L.S.-G.—It is hereby notified for general information that, under section 13 of the Bengal Village Self-Government Act, 1919 (Bengal Act V 1919), read with rule 35 of the rules for the election and appointment of members of the union boards, etc., Babu Ashutosh Sar has been duly elected to be a member for Ward No. I of the Sian union board in Bolpur police-station in the Sadar subdivision of the district of Birbhum, *vice* Babu Binode Behari Sar, resigned.

[ILLEGIBLE], for *District Magistrate.*

Bankura, the 25th June 1936.

No. 3481J.—It is hereby notified for general information that, under section 13 of the Bengal Village Self-Government Act, 1919 (Bengal Act V of 1919), read with rule 35 of the rules for the election and appointment of members of union boards, Dr. Lakshmi Narayan Sarkar has been elected as a member of Akui union board in police-station Indas in the Vishnupur subdivision of the district of Bankura, *vice* Babu Sarat Chandra Sarkar, deceased.

J. M. CHATARJI, *District Magistrate.*

Howrah, the 25th June 1936.

It is hereby notified for general information that, under section 6 (*3*) of the Bengal Village Self-Government Act (Bengal Act V of 1919), read with section 13 of the Act, Saikh Abdul Gani of Bankul in police-station Jagatballavpur, has been appointed a member of the Jagatballavpur union board in police-station Jagatballavpur of the Sadar subdivision, Howrah, *vice* Kazi Abdul Aziz, resigned.

S. C. SINHA, *District Magistrate.*

Orders by the Deputy Inspector-General of Police, Burdwan Range.

Chinsura.—No. 5187.—19th June 1936.—The unexpired portion of leave (viz., 9 days' leave on average pay) granted to Babu Khagendra Nath Sinha, Inspector, Midnapore, under notification—Chinsura—No. 2649, dated 9th April 1936, published in the *Calcutta Gazette*, dated the 23rd April 1936, is hereby cancelled.

J. M. MACKENZIE,

Deputy Inspector-General of Police (offg.).

Chittagong Division—Chittagong.

No. 2942G.—20th June 1936.—In exercise of the powers conferred by section 6 (*c*) of the Bengal Ferries Act, I of 1885, and delegated to the Commissioners of Divisions by Government notification No. 3403L.S.-G., dated the 1st December 1904, the undersigned being of the opinion that a public ferry is needed between Sarippur and Dumuria over the Chhota Feni river in the district of Noakhali, hereby sanctions the establishment of such ferry and issues this notification for general information.

2. Furthermore in exercise of the powers conferred on him by Government notification No. 217L.S.-G., dated the 12th January 1905, he also directs, under sections 35 of the said Act, I of 1885 (B.C.), that this ferry be managed by the district board of Noakhali and that all the proceeds of this ferry and all the fines levied and compensation received under the said Act in respect thereof be paid into the district fund of Noakhali with effect from the date of opening of the ferry.

No. 2999G.—24th June 1936.—It is hereby notified for general information that Maulvi Nur Ahamed, M.A., B.L., and Babu Suresh Chandra Banerjee have been duly elected to be the Chairman and Vice-Chairman, respectively, of the Chittagong Municipality.

J. D. V. HODGE, *Commissioner (offg.).*

Dacca Division—Dacca.

No. 3184J.—22nd June 1936.—Babu Heramba Nath Bhattacharji, Sub-Deputy Collector and Circle Officer, West Circle, Patuakhali, in the district of Bakarganj, is allowed leave on average pay for six weeks, under rule 81 (*b*) (*ii*) of the Fundamental Rules, with effect from the 25th May 1936.

No. 3237J.—24th June 1936.—It is hereby notified for general information that, under rule 20 (*b*) of the Manual of Rules for the management of charitable hospitals and dispensaries in Bengal, published with Government notification No. 138-T. Medl., dated the 7th June 1915, the following gentlemen are appointed to be members of the committee for the management of the charitable dispensary at Pirojpur in the district of Bakarganj:—

The Subdivisional Officer, Pirojpur, *ex-officio.*
The Chairman of the Pirojpur Municipality, *ex-officio.*
The Vice-Chairman of the Pirojpur Municipality, *ex-officio.*
The President, Muktear Bar, Pirojpur, *ex-officio.*
The Secretary, Pleaders' Bar, Pirojpur, *ex-officio.*
The Subdivisional Medical Officer in charge of the hospital and dispensary, Pirojpur, *ex-officio.*
Dr. Jadu Nath Guha.
Maulvi Syed Muhammad Afzal.
Maulvi Tofazzal Ahmed Choudhury.
Maulvi Abdul Karim Taluqder.
Babu Satish Chandra Ghose.
Babu Khetra Mohon Majhi.

L. R. FAWCUS, *Commissioner (offg.).*

Presidency Division—Calcutta.

No. 1559L.S.-G.—20th June 1936.—Under rule 23 of the dispensary manual the following gentlemen have been appointed to be members of the managing committee of the Mirpur Charitable Dispensary in the district of Nadia :—

Babu Mohendra Nath Biswas, *vice* Babu Amulya Prosad Ghose, resigned.
Babu Gangadhar Biswas, *vice* Babu Bibhuti Bhusan Pal, resigned.
Maulvi Muhammad Abdul Aziz, *vice* Maulvi Tafazzel Hossain Khondkar, resigned.

No. 1560L.S.-G.—20th June 1936.—Under rule 23 of the dispensary manual, Maulvi Kazi Noor Alum has been appointed a member of the managing committee of the Hafinghatta Charitable Dispensary in the district of Nadia, in place of Dr. Paresh Nath Mukherjee, removed.

No. 1268M.—24th June 1936.—In exercise of he powers conferred by section 50 of the Bengal Municipal Act, 1932 (Bengal Act XV of 1932), it is hereby notified for general information that Mr. J. Leslie and Mr. J. Scott have been elected Chairman and Vice-Chairman respectively of the Titagarh Municipality in the district of the 24-Parganas in place of Mr. P. Keddie and Mr. J. Leslie, resigned.

No. 1271M.—24th June 1936.—In exercise of the powers conferred by section 50 of the Bengal Municipal Act, 1932 (Bengal Act XV of 1932), it is hereby notified for general information that Babu Krishna Chandra Sarkar has been duly elected Vice-Chairman of the Budge Budge Municipality in the district of the 24-Parganas in place of Babu Provash Chandra Dhur, resigned.

No. 1585L. S.-G.—24th June 1936.—It is hereby notified for general information that at the general elections held, the following gentlemen have been elected under section 9 of the Bengal Local Self-Government Act, III (B. C.) of 1885, as amended, to be members of the several local boards in the district of Jessore representing the thanas as noted above each :—

Sadar local board.

Kotwali thana.

Maulvi Muhammad Abdul Ghafur.
Maulvi Mafizuddin Ahmed.
Babu Benoy Kumar Dutta.

Abhaynagar thana.

Babu Sashi Sekhar Basu.
Babu Santosh Kumar Roy.

Manirampur thana.

Maulvi Abdul Latif Sardar.
Maulvi Muhammad Yusuf.
Babu Upendra Nath Mallick.

Jhinkargacha thana.

Maulvi Abdul Ghafur Biswas.
Maulvi Badaruddin.
Babu Dina Bandhu Chaudhury.

Bagherpara thana.

Munshi Daliladdin Ahmed.

Keshabpur thana.

Maulvi Saiyed Majid Baksha.
Babu Mahendra Nath Mallick.

Bongaon local board.

Bongaon thana.

Kazi Abdul Wafi.
Maulvi Ali Kadar Mandal.
Babu Satindra Prasad Ukil.
Babu Kalipada Chakravarty.

Moheshpur thana.

Babu Amulya Bhusan Mukherjee.
Maulvi Chaudhuri Fazlur Rahman.
Maulvi Muhammad Abdul Aziz.

Sarsha thana.

Maulvi Muhammad Zinatulla.
Babu Bhudhar Chandra Pandey.

Gaighata thana.

Babu Ratneswar Pandey.

Magura local board.

Magura thana.

Babu Gour Chandra Biswas.
Maulvi Khan Aga Muhammad Abdul Bari.
Maulvi Mokaddess Hossain Doctor.

Sripur thana.

Munshi Masial Azam *alias* Ratan Mia.
Babu Jogendra Nath Sikdar.

Muhammadpur thana.

Maulvi Kazi Abdul Hoque.
Babu Monohar Biswas (Jaria).

Salikha thana.

Babu Monohar Biswas.

Jhenidah local board.

Jhenidah thana.

Maulvi Muhammad Bazlur Rahman.
Maulvi Muhammad Atar Ali.
Babu Annada Charan Roy.

Sailkupa thana.

Babu Lakshmi Kanta Roy.
Maulvi Muhammad Abdul Ghafur.
Kazi Muhammad Sarwaruddin.

Harinakundu thana.

Bashiruddin Ahmed Mazumdar.

Kaliganj thana.

Munshi Muhammad Duliluddin Biswas.
Babu Ashutosh Dutta.

Kotechandpur thana.

Maulvi Ahmad Ali.

Narail local board.

Narail thana.

Babu Prafulla Kumar Roy.
Maulvi Waliar Rahman.

Kalia thana.

Munshi Muzaheruddin.
Babu Krishnadhan Biswas.

Lohagora thana.

Munshi Gopal Fakir.
Maulvi Assaduzzaman.

Alfadanga thana.

Munshi Dudu Mia.

A. J. DASH, *Commissioner*.

Jessore, the 22nd June 1936.

It is hereby notified for general information that, under sub-section (3) of section 6 of the Bengal Village Self-Government Act, 1919 (Bengal Act V of 1919), the following gentlemen have been appointed by me to be members of the undermentioned union boards within the different thanas in the Jhenidah subdivision of the district of Jessore :—

Jhenidah police-station.

Sadhuhati union board.

Munshi Bhiku Biswas.
Haran Biswas.
Babu Mohendra Nath Mukherjee.

Madhuhati union board.

Munshi Reajuddin Biswas.
Babu Behary Lal Saha.
Babu Hemonta Kumar Bhattacherjee.
Babu Surendra Nath Khan.

Sagenna union board.

Munshi Ayub Ali Dafadar.
Munshi Manik Biswas.
Munshi Aftab Biswas.
Munshi Ibrahim Biswas.
Munshi Golam Rabbani.
Munshi Heraj Biswas.

Kumrabari union board.

Babu Nirmal Chandra Chatterji.
Babu Jogendra Nath Karmakar.
Munshi Arshad Ali Biswas.
Haji Ahmed Ali Khondkar.
Moseh Karim Joardar.
Munshi Meajan Biswas.

Ganna union board.

Quazi Belayet Hossain.
Babu Pulin Behari Sarkar.
Babu Nagendra Nath Biswas.
Babu Amullaya Kumar Raha.

Maharajpur union board.

Babu Bhagai Biswas.
Babu Kali Pada Kanjilal.
Babu Indu Bhushan Deb Ray.
Babu Ramendra Nath Choudhuri.

Bhutiarganti union board.

Babu Tara Pada Sen Gupta.
Babu Surendra Nath Rai.
Munshi Nehaluddin.

Jhenidah union board.

Maulvi Nazer Ali, B.L.
Maulvi Kosmatulla, B.L.
Babu Kula Bhushan Bose, B.L.

Parahati union board.

Babu Jnanendra Nath Mitra.
Babu Rakhal Chandra Sarkar.
Babu Tarak Nath Biswas.

Harisankarpur union board.

Babu Arabinda Chakravarty.
Munshi Golam Sarwar.
Khondkar Ismail Hossain.

Padmakar union board.

Maulvi Sayed Abdul Gani.
Mir Shamser Ali.
Babu Sakti Charan Ghosh.

Farsandi union board.

Babu Bani Kanta Paul.
Babu Natobor Biswas.
Munshi Azaharuddin Biswas.

Kushabaria union board.

Munshi Puti Muhammad Biswas.
Babu Gajendra Nath Biswas.
Munshi Nural Hossain Biswas.

Kalicharanpur union board.

Munshi Azhar Ali Joardar.
Babu Sailaja Nath Guha Ray.
Munshi Badruddin.

Naldanga union board.

Babu Sudhindra Nath Deb Ray.
Babu Bijoy Gopal Mazumder.
Babu Kanai Lal Biswas.
Babu Guru Das Hore.
Munshi Shamser Ali Joardar.
Munshi Manik Biswas.
Munshi Ainuddin Chaudhuri.

Sailkupa police-station.

Tribeni union board.

Khondkar Abdul Latif.
Babu Priya Nath Mondol.
Munshi Ebadat Molla.

Ramchandrapur union board.

Babu Hiralal Chaudhuri.
Babu Kali Charan Chaudhuri.
Munshi Umar Ali Biswas.

Aguniapara-Benipur union board.

Munshi Muksudar Rahman.
Babu Rajendra Kumar Saha.
Babu Panchanan Biswas.

Sailkupa union board.

Babu Ram Chandra Saha.
Mir Abdur Rahim.
Munshi Jobed Ali.

Kancherkole union board.

Maulvi Kazi Sarwaruddin.
Babu Manindra Nath Biswas.
Babu Budhiswar Biswas.

Sarutia union board.

Munshi Md. Golam Ali Biswas.
Babu Makhon Lal Ghosh.
Babu Jatindra Nath Biswas.

Harihara union board.

Babu Nibaran Chandra Biswas.
Babu Gaya Nath Biswas.
Dr. Abdul Aziz Khan.

Dhalhara Chandra union board.

Munshi Abdur Rahman Joarder.
Munshi Abbas Ali Molla.
Munshi Moffizuddin Joarder.

Fazilpur union board.

Babu Gour Chandra Biswas.
Dr. Brojendra Nath Majumder.
Maulvi Khan Abdur Rahim.

Bagura union board.

Khondkar Nekbar Ali.
Munshi Delayet Ali Mian.
Babu Shashti Charan Nath.

Abaipur union board.

Munshi Abu Ahmed Mian.
Munshi Arshad Ali Biswas.
Babu Lankeswar Mondal.

Nityanandapur union board.

Munshi Bakher Biswas.
Babu Ram Pada Mondol.
M. Ibrahim Biswas.

Sastibor union board.

Munshi Abdur Rahim.
Babu Bidhu Bhushan Biswas.
Maulvi Md. Helaluddin.

Dudsar union board.

Babu Ram Deb Biswas.
Munshi Abdul Gani Shah.
Munshi Moinuddin Ahmed.

Fulhari union board.

Munshi Afiluddin Biswas.
Munshi Yasinuddin Biswas.
Munshi Bahadur Ali Biswas.

Kotchandpur police-station.

Joydia-Lakshmikundu union board.

Babu Byomkesh Mukherji.
Munshi Moslem Hossain Mondol.
Munshi Aftabuddin Ahmed.

Dora union board.

Munshi Azhar Ali Khan.
Maulvi Ahmed Ali.
Munshi Jahiruddin.
Babu Phani Bhushan Biswas.
Babu Upendra Nath Mazumder.

Mamunshia union board.

Babu Krishna Lal Das.
Babu Jotish Chandra Sen.
Munshi Ajibor Mondal.

Baluhar union board.

Munshi Fazar Ali Biswas.
Babu Purna Chandra Biswas.
Babu Indu Bhushan Pal.

Elangi union board.

Munshi Mahammad Taib Ali Malita.
Munshi Golam Robbani Biswas.
Babu Atul Chandra Biswas.
Babu Upendra Nath Bose.

Harinakundu police-station.

Bhaina union board.

Munshi Badruddin Ahmed.
Munshi Arshad Ali Biswas.
Babu Binode Behary Dutta.

Joradah union board.

Munshi Ujir Ali Biswas.
Chiniruddin Biswas.
Babu Abinash Chandra Sarkar.

Bhawanipur union board.

Babu Jadu Nath Shaha.
Munshi Shamsuddin Biswas.
Munshi Jasimuddin Biswas.
Babu Hem Chandra Biswas.

Rishkhali union board.

Munshi Abdul Jalil Khan.
Babu Jogendra Nath Joardar.
Babu Tarapada Acharji.
Munshi Khorshed Ali Biswas.
Munshi Fazer Ali Biswas.

Kapashhati union board.

Munshi Ataur Rahman.
Munshi Abdus Samad Biswas.
Munshi Hamed Ali Biswas.

Harinakundu union board.

Munshi Kayemuddin Biswas.
Munshi Meser Biswas.
Munshi Mandar Ali Khondkar.

Raghunathpur union board.

Munshi Atar Ali Biswas.
Munshi Abdul Biswas.
Munshi Reazuddin Biswas.

Mathurapur union board.

Babu Hara Lal Biswas.
Munshi Helaluddin Biswas.
Munshi Abdul Karim.

Kaliganj police-station.

Kaliganj union board.

Munshi Ebadulla.
Munshi Abdul Jobbar Shaha.
Munshi Azimuddin.
Babu Bijoy Chandra Ganguli.
Babu Kashi Nath Dutt.
Babu Niranjan Biswas.

Tailkupi union board.

Munshi Shaikh Md. Makbulul Haque.
Babu Satish Chandra Das.
Babu Kiran Chandra Biswas.
Babu Durga Das Deb Ray.

Kola union board.

Babu Jotindra Nath Biswas.
Munshi Amir Ali Biswas.
Munshi Khorshed Ali Kazi.

Nagor Chaprail union board.

Babu Benwarilal Dutt.
Maulvi Sodaruddin Ahmed.
Babu Purna Chandra Saha.

Shibnagar union board.

Babu Mohendra Nath Sarkar.
Munshi Nasimuddin Biswas.
Munshi Babur Ali Khan.
Munshi Afiluddin Biswas.

Trilochanpur union board.

Babu Surendra Gopal Mitra.
Munshi Jafar Ali Biswas.
Munshi Habibas Sobhan Khan.

Roygram union board.

Babu Ashutosh Dutt.
Munshi Azizur Rahman Biswas.
Babu Adhar Chandra Saha.

Maliat union board.

Munshi Ahmed Ali Khan.
Babu Shib Nath Ghosh.
Munshi Mu Kra m Ali

Mongolpaita union board.

Munshi Elahi Baksha Joardar.
Babu Sachindra Nath Chakravarti.
Munshi Mir Mofazzal Ali.

Kashtabhanga union board.

Babu Adhar Chandra Ghosh.
Babu Nitya Saran Biswas.
Munshi Azibar Biswas.

Mandarbaria union board.

Maulvi Musharraf Hossain.
Babu Kanti Lal Biswas.
Babu Bhuban Chandra Ghosh.

Jatrapur union baord.

Munshi Muhammad Ismail.
Munshi Shahadat Khan.
Babu Brindaban Chatterjee.
Babu Hari Pada Biswas.

Jagadispur union board.

Munshi Ismail Biswas.
Munshi Rahim Baksha Biswas.
Munshi Helaluddin Biswas.
Babu Baidya Nath Biswas.
Babu Hazari Lal Parui.
Babu Phani Bhushan Mitra.

Putibila union board.

Munshi Mozaffar Hossain Biswas.
Babu Priya Nath Rakshit.
Babu Nagendra Kumar Misra.

It is hereby notified for general information that, under sub-section (2) of section 6 of the Bengal Village Self-Government Act, 1919 (Bengal Act V of 1919), the gentlemen whose names are given below have been duly elected to be members of the following union boards in the Jhenidah sub-division of Jessore district :—

Jhenidah police-station.

Sadhuhati union board.

Babu Nikhileswar Basu, B.A.
Munshi Ahmad Ali Biswas.
Munshi Amjad Ali Molla.
Babu Monmotha Nath Kuri.
Babu Monoranjan Roy.
Munshi Tahajat Khan.

Madhuhati union board.

Babu Kulada Bhushan Bhattacherjee.
Munshi Afiluddin Biswas.
Munshi Azizar Rahman Biswas.
Munshi Sukur Joardar.
Munshi Mahar Ali Sardar.

Sagenna union board.

Babu Biswoswar Biswas.
Babu Sureswar Chatterji.
Babu Kumaresh Chandra Adhikari.

Kumrabari union board.

Babu Nalini Mohan Mukherji.
Munshi Asiruddin Ahammad.
Babu Tara Sankar Chatterjee.

Gunna union b ard.

Munshi M chaheb Ali Khan.
Munshi Era l Ali Biswas.
Babu Narendra Nath Mitra.
Munshi Atar Ali Mondal.
Munshi Abdul Gani Joardar.

Maharajpur union board.

Munshi Muhammad Chirman Biswas.
Munshi Mubashwir Hachan.
Munshi Mozahar Biswas.
Munshi Rahman Biswas.
Munshi Shamsuddin Biswas.

Bhutiargati union board.

Babu Kalipada Biswas.
Munshi Safur Ali Biswas.
Munshi Reajuddin Biswas.
Munshi Safiuddin Biswas.
Munshi Yeakubali Mia.
Munshi Arman Ali Biswas.

Jhenidah union board.

Munshi Hamed Ali Joardar.
Babu Satish Chandra Ganguli.
Babu Jotindra Nath Roy.
Munshi Abdul Latiff.
Babu Kunja Behari Kundu.
Babu Phani Bhushan Mazumder.

Parahati union board.

M. Ansuruddin Ahammad.
M. Salimuddin Ahammad.
Mir Lutfor Rahman.
Munshi Esaratulla.
Munshi Shahadat Ali.
M. Mozahar Molla.

Harisankarpur union board.

M. Latafat Hossain Khondkar.
M. Mohatapuddin Biswas.
Babu Hari Gopal Bose.
Babu Beni Madhab Karmakar.
M. Kazi Atwar Rahman.
Babu Nani Gopal Ghosh.

Padmakar union board.

Munshi Mobarek Ali Mirdha.
Munshi Shamsher Ali Khan.
Munshi Gunjar Ali Molla.
Munshi Jalaluddin Biswas.
Babu Gopal Chandra Biswas.
Munshi Rahenuddin Chaudhuri.

Farsandi union board.

M. Habibus Sobhan.
M. Bazlur Rahman.
M. Kayemuddin Ahammad.
M. Hazeruddin Ahammad.
Babu Nil Kanta Sikdar.
Babu Gokul Chandra Biswas.

Kushabaria union board.

M. Rajab Ali Biswas.
M. Abdul Jobbar.
M. Khorshed Ali Joardar.
M. Sheikh Abdul Samad.
Babu Priya Nath Biswas.
Babu Gopal Chandra Mazumder.

Kalicharanpur union board.

M. Latafat Hossain Joardar.
M. Aftabuddin Biswas.
M. Jobbar Ali Biswas.
M. Mobarek Ali Biswas.
M. Chhanaruddin Biswas.
M. Mantajuddin Sikdar.

Naldanga union board.

M. Syed Ali Dafadar.
M. Alimuddin Biswas.

Sailkupa police-station.

Tribeni union board.

Babu Panchanan Biswas.
Munshi Muhammad Abul Hossain.
Munshi Shamsher Molla.
Munshi Atar Ali Molla.
Babu Dhireswar Biswas.
Maulvi Tofailuddin Molla.

Ramchandrapur union board.

Maulvi Najimuddin Ahmed Majumdar.
Babu Upendra Nath Biswas.
Munshi Muhammad Abdul Aziz Biswas.
Munshi Waseluddin Biswas.
Munshi Mahammad Baser Ali Biswas.
Munshi Muhammad Tarip Biswas.

Aguniapara-Benipur union board.

Munshi Jenatulla Joardar.
Munshi Golam Kader Biswas.
Munshi Hatem Ali Biswas.
Munshi Yasinuddin Biswas.
Munshi Najiruddin Biswas.
Munshi Muhammad Manik Khan.

Sailkupa union board.

Babu Hriday Nath Mazumder.
Babu Promada Bhushan Sannyal.
Babu Radha Krista Das Roy Chaudhuri.
Babu Brindaban Chandra Saha.
Babu Kalidas Saha.
Babu Satish Chandra Saha.

Kancherkole union board.

Munshi Goribulla Molla.
Munshi Muhammad Golam Sarwar Molla.
Maulvi Habibar Rahman Mian.
Munshi Raushan Ali Mian.
Maulvi Muhammad Sikendar Ali.
Munshi Muhammad Majibar Rahman Mian.

Sharutia union board.

Munshi Babuali Laskar.
Munshi Joynaluddin Molla.
Munshi Azharuddin Biswas.
Munshi Mokarram Hossain Mian.
Munshi Sheikh Mozahar Hossain.
Munshi Sadek Ali Sheikh.

Harihara union board.

Munshi Muhammad Motahar Hossain Joardar.
Molla Tobarakuddin Ahmed.
Munshi Muhammad Sanaruddin Joarder.
Munshi Muhammad Esanuddin Joardar.
Munshi Kafiluddin Biswas.
Munshi Muhammad Mandari Molla.

Dhalhara Chandra union board.

Munshi Wasel Biswas.
Munshi Monajuddin Biswas.
Babu Hriday Nath Biswas.
Babu Jotindra Nath Chakravarty.
Babu Gangadhar Biswas.
Babu Khokan Chandra Kundu.

Fazilpur union board.

Munshi Din Muhammad Biswas.
Munshi Kader Khan Dad.
Munshi Abul Hossain Biswas.
Muhammad Meher Ali Biswas.
Munshi Badiuddin Biswas.
Munshi Abdul Jobbar Shah.

Bagura union board.

Munshi Bahadur Biswas.
Munshi Abdul Latif Mian.
Babu Khetra Mohan Bhowmik.
Maulvi Kazi Momtajuddin Ahmed.
Munshi Obedul Haque Molla.
Babu Narayan Chandra Kundu.

Abaipur union board.

Munshi Wasol Biswas.
Munshi Tofazzal Hossain.
Babu Murari Mohan Sikdar.
Babu Priya Nath Joardar.
Munshi Golam Kader Biswas.
Munshi Mansur Ali Joardar.

Nityanandapur union board

Babu Lakshmi Kanta Roy.
Babu Shib Nath Biswas.
Munshi Golam Sarwar Biswas.
Babu Satish Chandra Mitra.
Babu Panchanan Sarkar.
Babu Promotha Nath Bose.

Sastiber union board.

Babu Gokul Chandra Bose.
Munshi Rafiuddin Ahmed.
Munshi Nasor Ali Biswas.
Munshi Darbesh Mian.
Munshi Amed Ali Biswas.
Babu Mrinal Kanti Mitra.

Dudsar union board.

Munshi Panchu Joardar.
Babu Kamini Kumar Mitra.
Munshi Hatem Ali Biswas.
Munshi Fakir Muhammad Molla.
Babu Jamini Bhushan Biswas.
Babu Radha Charan Biswas.

Fulhari union board.

Babu Jotindra Nath Chakravarty.
Babu Hira Lal Saha.
Babu Parchanan De.
Munshi Samed Laskar.
Munshi Atar Ali Biswas.
Munshi Faizuddin Biswas.

Kaliganj police-station.

Kaliganj union board.

M. Lal Muhammad Biswas.
M. Abdar Rahman Biswas.
M. Mobarek Ali Biswas.

Tailkupi union board.

M. Jonab Ali Biswas.
M. Karim Baksha Biswas.
Md. Rahenuddin Jamadar.
M. Ebrahim Joardar.
M. Molajuddin Biswas

Kola union board.

Babu Gopal Das Roy.
Babu Keshob Lal Tarafdar.
M. Kinu Biswas.
M. Abdul Jobbar Molla.
M. Tofiluddin Biswas.
Babu Nagendra Nath Biswas.

Nagor Chaprail union board.

M. Nasimuddin Biswas.
M. Eradatulla Khan.
M. Mir Golam Kibria.
M. Waresh Ali Biswas.
Babu Manindra Bhushan Mallik.
M. Abdul Karim Biswas.

Shibnagar union board.

Munshi Muhammad Mekraj Ali.
Munshi Mozahar Ali Biswas.
Babu Bibhuti Bhushan Chatterjee, L.M.F.
Babu Jitendra Nath Choudhuri.
M. Tarafuddin Biswas.

Trilochanpur union board.

Munshi Tofezzal Hossain.
Babu Panchanan Dutta.
Babu Basanta Kumar Chatterjee.
M. Aizuddin Mondal.
M. Hafizuddin Mondal.
M. Khelafat Hossain Biswas.

Roygram union board.

Munshi Fadali Jamaddar.
Babu Panchanan Sen.
Khondkar Jahur Ali.
M. Keamuddin Biswas.
M. Shamsher Ali.
Babu Tara Pada Nath Biswas.

Maliat union board.

Munshi Daliluddin Biswas.
Munshi Torfan Molla.
Munshi Rohenuddin Molla.
Babu Monmatha Nath Pal.
M. Azizar Rahman Khan.
Babu Bhushan Chandra Mitra.

Mongalpeita union board.

Munshi Karim Baksha Joardar.
Babu Shib Charan Karmakar.
M. Darbesh Biswas.
M. Rafej Biswas.
M. Nazer Ali Biswas.
Babu Bijoy Chandra Ghosh.

Kasthabhanga union board.

Munshi Mobarak Hossain Biswas.
Munshi Kayem Ali Molla.
Munshi Ijjatali Biswas.
Munshi Joynal Biswas.
Babu Hemonta Kumar Ghosh.
M. Abdur Rashid.

Manderbaria union board.

Munshi Ismail Biswas.
Munshi Israil Biswas.
Munshi Muhammad Biswas.
Munshi Mandu Mondal.
Munshi Abdul Maleque.
Munshi Dayem Biswas.

Jatrapur union board.

Munshi Hachen Ali Biswas.
Babu Pradyot Kumar Halder.
M. Afsar Ali Biswas.
Munshi Hakim Biswas.
Babu Hazari Lal Mazumder.

Jagadishpur union board.

Munshi Surat Ali Biswas.
Munshi Karim Baksha Mian.
Munshi Esrail Biswas.

Patibila union board.

Babu Ashutosh Chaudhuri.
M. Ahammad Ali Biswas.
M. Maula Baksha Biswas.
M. Mozaharul Haque.
M. Abdul Bari Biswas.
M. Refajuddin Biswas.

Kotchandpur police-station.

Joydia-Lakshmikundu union board.

Babu Nityendra Nath Roychaudhuri.
Babu Bipin Behari Banerjee.
Babu Aswani Kumar Mukherjee.
Maulvi Kobad Ali Khan.
Munshi Surat Ali Biswas.
Babu Monoranjan Roy Chaudhuri.

Dora union board.

Munshi Muhammad Golam Mustafa.
Babu Kali Pada Saha.
M. Wazed Ali Molla.
M. Rajab Ali Mir.

Mamunsia union board.

Babu Kali Pada Dutta.
M. Jasimuddin Ahmed Khondkar.
M. Muhammad Shamsul Hoque Mondal.
M. Abdul Jobbar Mondal.
M. Ebrahim Biswas.
M. Abdul Kader Biswas.

Baluhar union board.

Munshi Maniruddin Biswas.
Munshi Shamsuddin Ahammad.
Babu Satish Chandra Nandi.
M. Hamed Ali Sheikh.
M. Golam Rahman Biswas.
M. Mafizuddin Mondal.

Elangi union board.

Babu Krishna Pada Biswas.
Munshi Kayemuddin Ahmed.
Munshi Esa Haque Ali Biswas.
Munshi Rahmatulla Biswas.
Munshi Saied Ali Biswas.

Harinakundu police-station.

Bhaina union board.

Munshi Golam Kader Lasker.
Munshi Abdul Karim Khan.
Babu Amrita Lal Saha.
Maulvi Ehsan Ali.
Mir Belayet Hossain.
Babu Adhar Chandra Biswas.

Joradah union board.

Munshi Kayem Ali Biswas.
Munshi Mahiuddin Ahmed.
Babu Satish Chandra Saha.
Munshi Torab Ali Biswas.
Munshi Mansur Ali Biswas.
Kazi Kafiluddin Ahmed.

Bhawanipur union board.

Maulvi Herasatulla Joardar.
Babu Subol Chandra Saha.
Munshi Md. Danesh Ali.
Munshi Sharafat Hossain.
Munshi Sabdar Ali Biswas.

Rishkhali union board.

Munshi Karam Ali Joardar.
Munshi Shamsuddin Mollik.
Munshi Abdul Jobbar Shaikh.
Munshi Mojhar Ali Ahmed.

Kapashhati union board.

Babu Santosh Kumar Banerjee.
Babu Mohadev Chakravarty.
Babu Baidya Nath Chakravarty.
Babu Kali Pada Biswas.
Babu Kailash Chandra Saha.
Munshi Panja Ali Biswas.

Harinakundu union board.

Babu Satyendra Nath Roy Chaudhuri.
Babu Rash Behari Bose.
Munshi Maniruddin Biswas.
Babu Dharani Dhar Pal.
Babu Kanai Lal Biswas.
Munshi Mobarak Ali Biswas.

Raghunathpur union board.

Munshi Maizuddin Biswas.
Munshi Akbar Ali Biswas.
Munshi Md. Kafiluddin Biswas.
Babu Kakir Chand Biswas.
Munshi Motaharuddin Ahmed Mazumdar.
Munshi Khorshed Ali Biswas.

Mathurapur union board.

Munshi Khorshed Ali Molla.
Munshi Jahar Ali Joardar.
Munshi Reazuddin Biswas.
Maulvi Md. Ramzan Ali.
Munshi Jainuddin Biswas.
Munshi Mozharali Biswas.

H. DATTA, for *District Magistrate.*

Orders by the Deputy Inspector-General of Police, Intelligence Branch.

Calcutta.—No. 1124/R.O.—24th June 1936.—Babu Tarak Prasad Bhattacharji, Inspector, is granted 21 days' leave on average pay in extension of the leave already granted to him.

Babu Hem Chandra Sen (II), Inspector, is granted 1 month's leave on average pay in extension of the leave already granted to him.

C. E. S. FAIRWEATHER,
Deputy Inspector-General of Police (*offg.*).

Rajshahi Division—Jalpaiguri.

No. 2985M.—22nd June 1936.—In exercise of the powers conferred on me by section 19(2) of the Local Self-Government Act (Bengal Act III of 1885) as amended up to date, I appoint Mr. J. J. C. Watson to be a member of the Jalpaiguri district board, *vice* Mr. G. Turbett, resigned.

F. W. ROBERTSON, *Commissioner.*

Orders by the Deputy Inspector-General of Police, Rajshahi Range.

Jalpaiguri.—No. 4566.—19th June 1936.—Babu Nalini Mohan Sanyal, Inspector, Rangpur, is granted 6 days' furlough on half average salary, on medical certificate, under Article 316, Civil Service Regulations (Now Leave Rules), in extension of the leave already granted to him.

The existing acting arrangement will continue.

Babu Sarada Kumar Bhattacharji, Inspector, Rangpur, is granted 21 days' leave on average pay, under rule 81 (*b*)(*ii*) of the Fundamental Rules, in extension of the leave already granted to him.

The existing acting arrangement will continue.

E. B. JONES,
Deputy Inspector-General of Police.

Registered No. C207

The Calcutta Gazette

THURSDAY, JULY 2, 1936.

PART IA

Orders and Notifications by the Government of India republished for general information.

FOREIGN AND POLITICAL DEPARTMENT.

Order of the Star of India.

NOTIFICATION.

Simla, the 23rd June 1936.

No. 361-S.I.- His Excellency the Grand Master of the Most Exalted Order of the Star of India is pleased to announce that His Imperial Majesty The King, Emperor of India, has been graciously pleased to make the following promotions in, and appointments to, the said Order :—

To be Companions.

* * * *

John Carson Nixon, Esquire, C.I.E., Indian Civil Service, Secretary to the Government of India in the Finance Department.

Bertie Munro Staig, Esquire, Indian Civil Service, Financial Adviser, Military Finance, Government of India (on leave).

Gilbert Pitcairn Hogg, Esquire, C.I.E., Indian Civil Service, Chief Secretary to the Government of Bengal, Bengal.

* * * *

B. J. GLANCY,

Secy. to the Most Exalted Order of the Star of India.

FOREIGN AND POLITICAL DEPARTMENT.

Order of the Indian Empire.

NOTIFICATION.

Simla, the 23rd June 1936.

No. 362-I.E.- His Excellency the Grand Master of the Most Eminent Order of the Indian Empire is pleased to announce that His Imperial Majesty The King, Emperor of India, has been graciously pleased to make the following promotions in, and appointments to, the said Order : -

To be Knights Commanders.

* * * *

Maharaja Sir Prodyot Kumar Tagore Bahadur, Zamindar, lately President of the Calcutta Silver Jubilee Celebration Committee, Calcutta, Bengal.

Sir Alexander Robertson Murray, C.B.E., lately Chairman, Indian Textile Tariff Board.

To be Companions.

* * * *

Donald Gladding, Esquire, Indian Civil Service, lately Secretary to the Government of Bengal in the Finance Department, Bengal.

* * * *

Colonel Richard Barry Butler, C.B.E., M.C., Military Secretary to His Excellency the Governor of Bengal.

* * * *

B. J. GLANCY,

Secy. to the Most Eminent Order of the Indian Empire.

FOREIGN AND POLITICAL DEPARTMENT.

Order of the British Empire.

NOTIFICATION.

Simla, the 23rd June 1936.

No. 363-H.—His Imperial Majesty The King, Emperor of India, has been graciously pleased to give orders for the following appointments to the Most Excellent Order of the British Empire :—

To be Officers.

Civil Division.

* * * *

Frederick Graham Roberts, Esquire, Partner, Graham Roberts and Co., Calcutta, Honorary Secretary of the Bengal Provincial Committee of Their Majesties' Silver Jubilee Fund, Bengal.

* * * *

To be Members.

Civil Division.

* * * *

Ratan Mohan Chatterjee, Esquire, Solicitor and Notary Public, Partner of the firm of Messrs. R. M. Chatterjee and Co., Calcutta, Bengal.

Henry Raymond Edmunds, Esquire, Superintendent of Agriculture, Kalimpong, Bengal.

* * * *

Hirendra Nath Ghosh, Esquire, of the Associated Press, Bengal.

* * * *

Charles Edwin Holmes, Esquire, lately Officiating District Controller of Stores, Eastern Bengal Railway, Bengal.

* * * *

William Lacey, Esquire, A.M.I. MECH. E., Indian Ordnance Department, Assistant Inspector of Guns, Cossipore, Bengal.

* * * *

B. J. GLANCY,

Poltl. Secy. to the Govt. of India.

FOREIGN AND POLITICAL DEPARTMENT.

Knighthood.

NOTIFICATION.

Simla, the 23rd June 1936.

No. 364-H.—His Imperial Majesty The King, Emperor of India, has been graciously pleased to confer the honour of Knighthood on :—

* * * *

The Honourable Mr. Justice John Rolleston Lort-Williams, K.C., Judge of the High Court of Judicature at Fort William in Bengal.

* * * *

Vivian McCaw, Esquire, Senior Partner of Messrs. Kettlewell, Bullen and Co., Calcutta, Bengal.

* * * *

Ramaswami Srinivasa Sarma, Esquire, C.I.E., Editor, "The Whip", Calcutta.

* * * *

B. J. GLANCY,

Poltl. Secy. to the Govt. of India.

FOREIGN AND POLITICAL DEPARTMENT.

Imperial Service Order.

NOTIFICATION.

Simla, the 23rd June 1936.

No. 365-H.—His Imperial Majesty The King, Emperor of India, has been graciously pleased to make the following appointments to the Imperial Service Order :—

To be Companions.

* * * *

Thomas Bertram, Esquire, O.B.E., Superintendent, Viceregal Estates, Simla, Delhi and Calcutta.

Rai Bahadur Sarada Prasanna Ghosh, Bengal Civil Service, Officiating District Magistrate of Hooghly, Bengal.

* * * *

B. J. GLANCY,

Poltl. Secy. to the Govt. of India.

FOREIGN AND POLITICAL DEPARTMENT.

Kaisar-i-Hind Medal.

NOTIFICATIONS.

Simla, the 23rd June 1936.

No. 366-H. –His Excellency the Viceroy and Governor-General is pleased to announce that His Imperial Majesty The King, Emperor of India, has been graciously pleased to award the Kaisar-i-Hind Medal of the First Class for Public Service in India to :

Rajkumari, Mrs. Das, lately Principal, Bethune College, Calcutta, Bengal.

* * * *

No. 367-H. –His Excellency the Viceroy and Governor-General is pleased to award the Kaisar-i-Hind Medal of the Second Class for Public Service in India to :

* * * *

Miss Zoe de la Croix, Honorary Organising Secretary, Alexandra Rose Day Fund, Calcutta.

* * * *

The Reverend Robert Hawking Cooper, Missionary, Dayabari Medical Mission, Ranaghat, Nadia, Bengal.

* * * *

Tazammul Ahmed, Esquire, M.B. (Cal.), D.O.M.S. (Lond.), F.R.C.S. (Edin.), Honorary Ophthalmic Surgeon of the Eye Infirmary of the Medical College, Calcutta, Bengal.

* * * *

No. 369-H. His Excellency the Viceroy and Governor-General is pleased to award the Kaisar-i-Hind Medal of the Third Class for Public Service in India to :

* * * *

Maulvi Abdur Rahman, Talukdar, President of the Chitoshi Union Board, Hajiganj police-station, district Tippera, Bengal.

* * * *

Matilal Datta, Esquire, Stationary Veterinary Assistant Surgeon, Chittagong, Bengal.

* * * *

Maulvi Naziruddin Ahmed, Mukhtear, Brahmanbaria, district Tippera, Bengal.

* * * *

Abinash Chandra Rai Chaudhuri, Esquire, Inspector of Septic Tank Installations, Calcutta, Bengal.

* * * *

Maulvi Sayid Wajedali Chowdhri, Zamindar, Jaldi, police-station Banskhali, Chittagong, Bengal.

* * * *

B. J. GLANCY,

Poltl. Secy. to the Govt. of India.

FOREIGN AND POLITICAL DEPARTMENT.

NOTIFICATIONS.

Simla, the 23rd June 1936.

No. 377-H.—His Excellency the Viceroy and Governor-General is pleased to confer the title of Khan Bahadur, as a personal distinction, upon : –

* * * *

Haji Badi Ahmad Chaudhuri, M.L.C., Chittagong, Bengal Presidency.

Waliur Rahman, B.L., Planter and Proprietor of several tea gardens in Dooars and in Assam, Bengal Presidency.

Khan Sahib Maulvi Ali Azam, Deputy Magistrate and Deputy Collector, now working as Assistant Registrar of Co-operative Societies, Chittagong Division, Bengal Presidency.

Khan Sahib Mirza Abu Jaafar, Officiating Inspector of Schools, Presidency Division, Calcutta, Bengal Presidency.

Mr. Mahmood Hasan, Provost of the Dacca Muslim Hall, Commanding Officer of the University Training Corps, 12th Dacca Company, Bengal Presidency.

Mr. Golam Kibria, Zamindar of Habigunge, district Faridpur, Bengal Presidency.

* * * *

No. 378-H. His Excellency the Viceroy and Governor-General is pleased to confer the title of Rai Bahadur, as a personal distinction, upon :

Mr. Satya Prasanna Majumdar, District and Sessions Judge (retired), Bengal Presidency.

Babu Banamali Bagchi, Deputy Magistrate and Deputy Collector, Midnapore, Bengal Presidency.

Babu Suk Lal Nag, Zamindar, Bagerhat, Khulna, Bengal Presidency.

Babu Seth Tomal, Contractor, Eastern Bengal Railway, Lalmonirhat, Rangpur, Bengal Presidency.

Babu Probath Gopal Mukharji, Public Prosecutor, Calcutta, Bengal Presidency.

Rai Sahib Hriday Nath Datta, Deputy Superintendent of Police, Criminal Investigation Department, Bengal Presidency.

Babu Chaitanya Chand Seal, Personal Assistant to the Chief Engineer, Public Health Department, Government of Bengal, Calcutta, Bengal Presidency.

Babu Biraj Mohan Das, Superintendent, Bengal Tanning Institute, Calcutta, Bengal Presidency.

* * * *

Mr. Narendra Narayan Chakravarty, Assistant Commissioner of Income-Tax, Calcutta, Bengal Presidency.

* * * *

Mr. Ajoy Kumar Gupta, B.A., Divisional Superintendent, Broad Gauge, Eastern Bengal Railway, Calcutta, Bengal Presidency.

* * * *

No. 383-H.—His Excellency the Viceroy and Governor-General is pleased to confer the title of Khan Sahib, as a personal distinction, upon :—

* * * *

Syed Muhammad Afzal, Bakarganj district, Bengal Presidency.

Maulvi Md. Abdul Aziz, President, Union Board, Narayanpur, district Jessore, Bengal Presidency.

Maulvi Abdul Aziz, Talukdar, President, Mohanganj Union Board, Mymensingh, Bengal Presidency.

Mr. Minocher Hormasjee Dastoor, General Manager, D. Sorabjee and Co., Ltd., Parbatipur, Dinajpur, Bengal Presidency.

Maulvi Ahmadar Rahaman Seth, Contractor, Chittagong, Bengal Presidency.

Maulvi Khwaja Nuruddin, Inspector of Police, Mymensingh, Bengal Presidency.

Maulvi Muhammad Ishaque, Headmaster, Victoria Collegiate School, Comilla, Bengal Presidency.

Maulvi Shaikh Abdullah, Personal Assistant to the Director of Agriculture, Bengal Presidency.

Maulvi Syed Akbar Ali, B.L., Pleader, Sirajganj, Bengal Presidency.

* * * *

No. 384-H.—His Excellency the Viceroy and Governor-General is pleased to confer the title of Rai Sahib, as a personal distinction, upon :—

Babu Jatindra Nath Bose, Senior Interpreter, High Court, Original Side, Calcutta, Bengal Presidency.

Babu Kashipati Chatarji, Head Assistant, Budget Branch, Finance Department, Bengal Secretariat, Calcutta, Bengal Presidency.

Babu Chandra Bhusan Banerjee, L.M.S., Zamindar and President of Union Board, Ajodhya, district Bankura, Bengal Presidency.

Babu Bhudeb Chandra Sovakar, B.A., B.E., C.E.A., M.I.E., District Engineer, Nadia, Bengal Presidency.

Babu Bimala Charan Guha, retired Sub-Deputy Collector, Honorary Magistrate, Barisal, Bengal Presidency.

Babu Amrita Lal Mukharji, Headmaster, Chhaygaon High English School, Faridpur, Bengal Presidency.

Babu Indujyoti Mazumdar, Pleader, Vice-Chairman, District Board, Pabna, Bengal Presidency.

Babu Krishna Mohan Majumdar, Zamindar and Talukdar, Tippera, Bengal Presidency.

Babu Surjya Kumar Chakrabarty, Inspector of Police, Chittagong Hill Tracts, Bengal Presidency.

Babu Surendra Nath Mukharji, B.A., Sub-Deputy Magistrate and Sub-Deputy Collector, 24-Parganas, Bengal Presidency.

Babu Surendra Nath Lahiri, Officiating Deputy Superintendent of Police, Dacca, Bengal Presidency.

Babu Mokshada Prosad Ghosh, G.B.V.C., Assistant Director, Civil Veterinary Department, Eastern Range, Bengal Presidency.

Babu Binod Lal Sarkar, Confidential Assistant to His Excellency the Governor of Bengal, Bengal Presidency.

* * * *

Mr. Sarbari Bhusan Chaudhuri, Senior Stenographer, Office of the Controller of the Currency, Calcutta, Bengal Presidency.

Mr. Abinash Chandra Basu, Assistant Accounts Officer, Office of the Accountant-General, Bengal, Calcutta, Bengal Presidency.

* * * *

Mr. Ashutosh Sen, Assistant Superintendent, Rates and Development, Eastern Bengal Railway, Calcutta, Bengal Presidency.

* * * *

Mr. Charu Chandra Mozumdar, Assistant Presidency Postmaster, Calcutta, Bengal Presidency.

B. J. GLANCY,

Poltl. Secy. to the Govt. of India.

FOREIGN AND POLITICAL DEPARTMENT.

NOTIFICATIONS.

Simla, the 18th June 1936.

No. 358-H.—In consequence of the misconduct of Girindra Nath Ray Chaudhuri of Madaripur, district Faridpur, Bengal, he is hereby deprived of the title of Rai Sahib, which was conferred upon him as a personal distinction, in the notification of the Government of India in the Foreign and Political Department No. 333-H., dated the 3rd July 1926.

B. J. GLANCY,

Poltl. Secy. to the Govt of India.

The 17th June 1936.

No. 356-G.—With reference to notification No. 180-G., dated the 26th March 1936, the provisional recognition of the appointment of Mr. Kikuji Yonezawa as Consul-General for Japan at Calcutta, has been confirmed by His Majesty's Government.

H. A. F. METCALFE,

Foreign Secy. to the Govt. of India.

FOREIGN AND POLITICAL DEPARTMENT.

NOTIFICATION.

New Delhi, the 30th October 1935.

No. 577-G.—In exercise of the powers conferred by sub-section (*1*) of section 3 of the Murshidabad Act, 1891 (XV of 1891), and in continuation of the notifications of the Government of India in the Foreign Department No. 1077 I.B., dated the 2nd March 1900, and in the Foreign and Political Department No. 1413 I.B., dated the 13th August 1914, and in supersession of the notification of the Government of India in the Foreign and Political Department No. 336G., dated the 10th July 1934, the Governor-General in Council, on the written request of the Nawab Bahadur of Murshidabad, is pleased to add the additional immovable property specified in the annexed lists to the immovable property specified under the heads "Taluks or Estates paying revenue directly to Government" and "Putni tenures paying rent to Zamindars" in Parts 1 and 2, respectively, of Schedule I to the Deed of Settlement set out in the schedule to the said Act.

"*List of additional immovable property added to Part 1 of Schedule I to the Deed of Settlement Annexed to Act XV of 1891.*

Consecutive number.	Name of estate.	Pargannah.	District.	Number on district towji.	Area shown in the district settlement record.	Sudder Jumma.	Name recorded.	Remarks.
1	2	3	4	5	6	7	8	9
					Acres.	Rs.		
24	Juranpur ..	Goas ..	Murshidabad	3060	17·46	79	Nawab Bahadur of Murshidabad.	The Nawab Nahadur holds a farming lease of this estate.
25	Jadupur ..	Fatesingh ..	Do. ..	3117	92·43	237	Do. ..	The Nawab Bahadur is the proprietor of 13 annas of each estate and lessee in respect of the remaining 3 annas.
26	Sarmastpur ..	Do. ..	Do. ..	3176	11·60	19	Do. ..	
27	Kataikona ..	Do. ..	Do. ..	3177	12·97	11	Do. ..	
28	Rajyadharpur	Do. ..	Do. ..	3201	49·03	36	Do. ..	The Nawab Bahadur is the proprietor of 13 annas of each estate, and the remaining 3 annas belong to Maharaja Jogendra Narayan Rai Bahadur of Lalgola, Maharaja Sris Chandra Nandi of Kassimbazar and Maulvi Khondkar Fazlul Haq, Khan Bahadur, of Bharatpur. The whole of the area and the whole of the Government revenue payable for each estate have been shown in columns 6 and 7.
29	Ibrahimpur ..	Do. ..	Do. ..	3205	36·02	71	Do. ..	
30	Joyrampur ..	Do. ..	Do. ..	3209	16·69	33	Do. ..	
31	Beel Panchthupi	Do. ..	Do. ..	3206	32·28	84	Do. ..	....
32	Tenya ..	Do. ..	Do. ..	3178	15·79	19	Do. ..	The Nawab Bahadur is the proprietor of 6 annas and 6 pies of this estate and lessee in respect of the remaining 9 annas 6 pies.

List of additional immovable property to be added to Part 2 of Schedule I.

Consecutive number.	Name of tenure.	Pargannah.	District.	Number on district towji.	Area shown in the district settlement record.	Annual rental payable to Zamindars.	Name recorded.	Remarks.
1	2	3	4	5	6	7	8	9
					Acres.	Rs. a.		
10	Rajyadharpur	Fatesingh ..	Murshidabad	3201	49·03	7 10	Nawab Bahadur of Murshidabad.	The Nawab Bahadur is the putnidar of 3 annas of each estate of which the proprietors are Maharaja Jogendra Narayan Rai Bahadur of Lalgola and Maharaja Sris Chandra Nandi Bahadur of Kassimbazar and Maulvi Khondkar Fazlul Haq, Khan Bahadur, of Bharatpur. The entire area of each estate has been shown in column 6."
11	Ibrahimpur ..	Do. ..	Do. ..	3205	36·02	13 4	Do. ..	
12	Joyrampur ..	Do. ..	Do. ..	3209	16·69	7 2	Do. ..	

B. J. GLANCY,
Political Secy. to the Govt. of India.

FINANCE DEPARTMENT.

NOTIFICATIONS.

Simla, the 18th June 1936.

No. F. 7 (13)-R.I/36.—In exercise of the powers conferred by sub-rule (2) of rule 33, rules 37 and 42 and clause (*d*) of rule 44 of the Civil Services (Classification, Control and Appeal) Rules, the Governor-General in Council is pleased to direct that the amendment to Fundamental Rules made by the Secretary of State in Council as published in the Government of India, Finance Department Notification No. F. 7 (13)-R. I/36, dated the 18th June 1936, shall apply, and from the date on which it was made by the Secretary of State in Council shall be deemed always to have applied, to the services in respect of which power to make rules is delegated to the Governor-General in Council in the said rules.

No. F. 7 (13)-R. I/36.—The following Resolution by the Secretary of State for India in Council is published for general information :—

In exercise of the powers conferred by subsection (2) of section 96-B of the Government of India Act, the Secretary of State, with the concurrence of a majority of votes at a meeting of the Council of India held this 26th day of May 1936, hereby makes the following amendment in the Fundamental Rules, namely :—

From clause (*b*) of Rule 65 of the said Rules the following shall be deleted, namely :—

"unless the appellate or reviewing authority declares that he shall not so count it in whole or in part."

No. F. 13-(1)-R. II/36.—The following Resolution by the Secretary of State for India in Council is published for general information :—

In exercise of the powers conferred by subsection 2 of section 96-B of the Government of India Act the Secretary of State with the concurrence of a majority of votes at a meeting of the Council of India held this fifth day of May 1936, hereby makes the following amendments in the Civil Service Regulations, namely :—

(1) In Article 23-C of the said Regulations after the words "in consideration of" the words "the unhealthiness of the locality in which the work is performed or of" shall be inserted.

(2) In Article 32 of the said Regulations the words "unhealthiness or" shall be deleted.

[These amendments shall have effect and shall be deemed always to have had effect as though they had been made on 10th March 1924.]

No. F. 13-(1)-R. II/36.—In exercise of the powers conferred by sub-rule (2) of rule 33, rule 37, rule 42 and clause (*d*) of rule 44 of the Civil Services (Classification, Control and Appeal) Rules, the Governor-General in Council is pleased to direct that the following amendment shall be made to the Civil Service Regulations, namely :—

(1) In Article 23-C of the said Regulations after the words "in consideration of" the words "the unhealthiness of the locality in which the work is performed or of" shall be inserted.

(2) In Article 32 of the said Regulations the words "unhealthiness or" shall be deleted.

[These amendments shall have effect and shall be deemed always to have had effect as though they had been made on the 10th March 1924.]

RESOLUTION.

The 18th June 1936.

No. F./2-XIX Ex. II/36.—With reference to the Finance Department Resolution No. F. 8 (7)-R. I/31, dated the 30th March 1932, the Governor-General in Council is pleased to decide, after careful consideration of all the attendant circumstances, that the temporary reduction in allowances announced in Finance Department resolution No. F. 8 (7)-R I/31, dated the 27th February 1931, shall be made permanent.

ORDERED that the Resolution be published in the *Gazette of India*.

J. C. NIXON,

Secy. to the Govt. of India.

DEPARTMENT OF INDUSTRIES AND LABOUR.

NOTIFICATION.

POSTS AND TELEGRAPHS.

Simla, the 18th June 1936.

No. F M.-82/35 (Air).—In exercise of the powers conferred by the Indian Post Office Act, 1898 (VI of 1898), the Governor-General in Council is pleased to direct that the following further amendment shall be made in the Indian Post Office Rules, 1933, namely :—

In rule 156 of the said Rules for the words "Netherlands India or Zanzibar" the words "Netherlands India, Siam or Zanzibar" shall be substituted.

A. G. CLOW,

Secy. to the Govt. of India (offg.).

DEPARTMENT OF COMMERCE.

NOTIFICATIONS.

COMMERCE.

Simla, the 20th June 1936.

No. 32-C. (6)/36. In exercise of the powers conferred by clause 1 of the Order of King's Most Excellent Majesty in Council, dated the 13th August 1920, the Governor-General in Council, with the approval of the Right Honourable the Secretary of State for India in Council, is pleased to appoint the Hon'ble Malik Sir Firoz Khan Noon, Kt., Bar.-at-Law, Minister to the Governor of the Punjab, to be the High Commissioner for India in the United Kingdom, in succession to Sir Bhupendra Nath Mitra, K.C.S.I., K.C.I.E., C.B.E., with effect from the 1st July 1936.

REGISTRATION OF ACCOUNTANTS.

The 20th June 1936.

No. 2-A. (7)/36. With reference to this Department's Notification No. 35 (4)-T. & E. (R. A.), dated the 24th August 1935, it is hereby notified that in exercise of the powers conferred by rule 16 of the Auditor's Certificates Rules, 1932, the Governor-General in Council has been pleased to restore to the Register of Accountants the name of the following gentleman, namely:

"Mr. Sudhansu Kumar Mitra,
1/6, Rupchand Mukherji Lane,
Bhowanipur, Calcutta."

H. DOW,
Addl. Secy. to the Govt. of India.

LEGISLATIVE ASSEMBLY DEPARTMENT.

NOTIFICATION.

Simla, the 18th June 1936.

No. F. 43-11/36-A.—His Excellency the Governor-General, in exercise of the power conferred by sub-section (2) of section 63-D of the Government of India Act, is pleased to direct that a session of the Legislative Assembly shall commence at Simla on Monday, the 31st August, 1936.

MD. RAFI,
Secy. to the Govt. of India.

HOME DEPARTMENT.

NOTIFICATION.

JUDICIAL.

Simla, the 17th June 1936.

No. 27/13/36.—In pursuance of rule 14 of the Indian (Non-Domiciled Parties) Divorce Rules, 1927, the Governor-General in Council is pleased to appoint Mr. T. Roxburgh, C.I.E., I.C.S., Superintendent and Remembrancer of Legal Affairs, Bengal, *vice* Mr. N. G. A. Edgley, I.C.S., to exercise under the designation of Proctor within the jurisdiction of the High Court of Judicature at Fort William in Bengal, the duties assigned to His Majesty's Proctor by sections 181 and 182 of the Supreme Court of Judicature (Consolidation) Act, 1925.

J. A. THORNE,
Joint Secy. to the Govt. of India.

Registered No. C207

The Calcutta Gazette

THURSDAY, JULY 2, 1936.

PART IB

Educational Notices.

Krishnagar College—Session 1936-37.

The 9th May 1936.

The College re-opens on the 2nd July 1936 after the long vacation. Admission will commence immediately after the publication of the results in the *Calcutta Gazette*. The College teaches up to the B.A. and B.Sc. standard of the Calcutta University. It has got affiliation in the usual Arts and Science subjects in Honours in English, Sanskrit and Mathematics. The College is likely to be affiliated in Civics from 1936-37. The monthly tuition fee amounts to Rs. 6 for the I.A., Rs 7 for the I.Sc. and B.A. and Rs. 8 for the B.Sc. classes.

The College is situated in the midst of an extensive compound of over 100 bighas containing a large number of playgrounds. There is provision for all outdoor games. The College provides well-equipped gymnasium, common room and reading rooms for the use of the students, who receive individual attention both in their studies and their games. Arrangements have been made to divide the boys into groups and place them under the effective and intimate guardianship of their teachers. There is a fine two-storyed Hindu hostel in the College compound and hostel charges (including rent, furniture, light and medical attendance) do not exceed Rs. 13 a month. The boarders keep excellent health, and the general health in the town is also quite good. A new Muhammadan hostel has been constructed this year. Charges are moderate.

A considerable number of Government and private free-studentships and stipends is awarded every year in August or September to poor but deserving students of the College. Four stipends of Rs. 10, Rs. 7-12, Rs. 4 and Rs. 3 are also available for boarders of the Hindu hostel in straitened circumstances. The College Conversion Mohsin stipends are annually awarded to deserving Muhammadan students.

For prospectus and admission form, apply enclosing stamped and addressed envelope *to the Principal, Krishnagar College*.

S. C. GHOSAL, *Officer-in-charge*.

Sanskrit College.

1, College Square, Calcutta, the 18th May 1936.

Admission—Session 1936-37.

College re-opens on 2nd July 1936.

1. It is affiliated in English, Bengali, Sanskrit, History, Logic, Mathematics and Civics for I.A. and in English, Bengali, Sanskrit (Pass and Honours), History (Pass and Honours), and Philosophy (Pass and Honours). B.A. Honours History and Philosophy are taught at the Presidency College without extra fees.

2. Tuition fee Rs. 6 per month; 60 concessions at the rate of Rs. 2 besides half and free studentships. Scholarships ranging from Rs. 30 to Rs. 8 monthly. Special facilities for Sanskrit studies. Results uniformly brilliant. Veteran staff with Indian and European qualifications—First class M.A.'s, Gold Medalists, Ph.D.'s and senior officers in Government service.

Abundant facilities provided for extra-academic activities, viz., athletic club, college union, dramatic section, social gatherings, magazine and debating club.

3. Individual attention given to students in classes and seminars. Professors are in direct touch with students to coach and guide them inside the College and outside.

4. Aid from Vidyasagar Poor Fund rendered to poor deserving students.

5. Under the auspices of the Vidya Parishad—a literary association of the College—extramural lectures are delivered by distinguished persons at periodical meetings of the Parishad.

N. K. DUTT,
Principal, Sanskrit College (offg.)

University of Dacca.

NOTIFICATION.

University Buildings, Ramna, Dacca, the 1st June 1936.

Admission for the session 1936-37 in the Faculties of Arts (including Commerce), Science and Law will commence on 2nd July 1936. Candidates for admission must interview the Provost concerned, not later than the 21st July 1936 or three weeks after the date of publication of the results of the qualifying examination passed by the candidates in question, whichever is later. The Admission Committee may however at their discretion grant exceptions to this rule and may impose such fines for lateness as they deem fit. Class fee for undergraduate students (other than those reading for Honours in Physics and Chemistry) and Law students Rs. 8 per mensem; for undergraduate students reading for Honours in Physics or Chemistry, Special Honours in Physics and Mathematics, for M.A. students and M.Sc. students' in Mathematics Rs. 10 per mensem; for M.Sc. students in Physics and Chemistry Rs. 12 per mensem. Seat rent in halls from Rs. 2 to Rs. 4 and total minimum cost of tuition and living from Rs. 22 to Rs. 25 a month. The University has up to date laboratories (including an experimental Psychology Laboratory), an excellent library and an organised tutorial system. It possesses splendid residential facilities and strong students' unions and offers exceptional opportunities for athletics.

2. There are certain facilities for women students. Conveyance by bus is available for the intending women students.

3. Special facilities are given to poor students of backward communities by way of rent-free seats, special stipends and remission of part of examination fees.

4. There is a special Honours Course in Physics and Mathematics with no subsidiary subjects. This course provides opportunity for a special study of theoretical Physics from the Mathematical point of view. Provision has also been made for the teaching of Bio Chemistry in the Honours Course of Chemistry.

5. Further particulars regarding admission will be sent post-free on application to the Registrar.

N. AHMAD, *Registrar.*

Burdwan Division.

Chinsura, the 6th June 1936.

Applications are invited for admission into the panel of candidates for the posts of English teachers in Government High and Normal Schools and in Madrasahs as well as for the posts of Sub-Inspectors of Schools in the scale of Rs. 75—8/2—115—5/2—135—10/2—175 in the Subordinate Educational Service for the year 1936-37.

2. Only graduates preferably with an Honours degree, possessing a degree or diploma in teaching or first class M.A. or M.Sc. in *subjects useful for school work* shall be eligible for inclusion in the panel.

3. The candidates must not exceed 25 years of age on 1st August 1936 unless they have full two years' teaching experience or have worked as Sub-Inspector of Schools for two years. In that case the age-limit may be relaxed up to 30 years. They must be residents of the Burdwan Division and British subjects.

4. No candidate shall apply simultaneously to more than one Inspector of Schools.

5. The applications should be submitted in duplicate in the prescribed form as given below (schedule II) and be accompanied by the original Matriculation and other University certificates and diplomas as well as any other certificates relating to the attainments and character of the candidates.

6. Every candidate shall furnish certificates written not more than one year prior to the date of application from two responsible persons unconnected with his College or University and not related to him, testifying to his private character.

7. No person shall be eligible for appointment who is not of sound mind, good physique and active habits and free from organic defects.

8. No person shall be eligible for appointment who has endeavoured to enlist for his candidature the support of persons of influence or of officials of Government. Spontaneous recommendations from persons interested in, or otherwise known to, the candidate shall be disregarded.

9. The candidates whose names have already been empanelled are required to renew their application for retention of their names in the panel to be considered again, failing which their names will be automatically removed from the panel.

10. The applications will be received by the undersigned on or before 31st July 1936.

K. C. RAY.

Inspector of Schools, Burdwan Division

Schedule II.

Education Department.

Forms of application for appointment to posts of English teacher and Sub-Inspector of Schools in the scale of Rs. 75–8/2–115–5/2–135–10/2–175 in the Subordinate Educational Service.

(1) Name of applicant and present address (in full).

(2) Permanent address in full.

(3) Date of birth and age last birthday.

(4) Place of birth and permanent residence.

(5) Nationality at birth, religion and caste.

(6) Father's name, place of birth and nationality at birth.

(7) Father's address and profession (if dead, give address at date of death).

(8) Mother's place of birth and nationality at birth.

(9) Name of school last attended before entering University, giving address, with dates of entering and leaving.

(10) Name of University and College. Give dates of entering and leaving, and dates of passing examinations. State subjects studied, degrees, honours or prizes obtained and class and position in the class obtained at all University and other public examinations.

(11) Name of the Training College attended. Give year and class of the B. T. degree and the subject in which you specialised during training.

(12) Give details of any original work. If published, copies of the publication should be attached.

(13) Give details of any teaching experience with dates, and names of institutions. Any testimonials as to your ability as a lecturer, teacher, etc., should be attached.

(14) Give names of games played—

(*a*) at school,

(*b*) at college, and

(*c*) after leaving the college.

State whether you have had experience in organising games.

(15) State whether you are a trained Scout Master if, so, what troops you have been in charge of and where.

(16) Name two persons of position (with address in full) who can, if necessary, testify to your character, and to accuracy of your statements.

(17) If the time since leaving the school is not fully accounted for by replies given above, account for the remainder here with dates.

(18) Are you free from pecuniary embarrassments? If you are under liability to repay money advanced by an institution or party for your education, state the particulars.

(19) Have you ever been pronounced unfit at any time for Government employment by the Medical Board or any other duly constituted medical authority in Bengal? What serious illness have you suffered from since leaving the school?

(20) Have you appeared at any examination for Government service? If so, state when and for what appointment. With what result?

(21) Have you previously been rejected for any appointment in Government service? If so, when and for what reason?

(22) Are you willing to be appointed to any post temporarily vacant?

(23) Indicate the class of post you prefer *i.e.*, an English teachership or Sub Inspectorship or both.

(24) State here any facts not recorded above which should be mentioned as supporting your suitability for appointment.

(*Signature*) .....

(*Date*) .....

Rajshahi College, Rajshahi.

Rajshahi College, the 20th May 1936.

Re-opens on Wednesday, the 1st July 1936.

1. Affiliations:—

B. A.—English, Bengali, History, Philosophy, Mathematics, Economics, Sanskrit, Arabic and Persian, Honours in all subjects except Bengali and Persian.

B. Sc.—Physics, Chemistry, Mathematics. Honours in all subjects.

I. A.—English, Bengali, History, Sanskrit, Logic, Mathematics, Persian, Arabic, Civics, Botany.

I. Sc.—English, Bengali, Mathematics, Physics, Chemistry, Botany.

2. Girl students are admitted to all classes.

3. The following medals and prizes are awarded every year:—

(*i*) The Lalit Mohon Gold Medal to the student who stands highest on the History Honours list at the B. A. from Rajshahi College.

(*ii*) Four Mohini Mohon Ray Prizes, two of the value of Rs. 80 each, and two of the value of Rs. 25 each, to the students who obtain the highest and the next highest marks respectively at the B. A. and B. Sc. Honours Examinations from the Rajshahi College; and

(*iii*) A Rani Monmohini Silver Medal to the most successful student from the Rajshahi College on the combined results of the I. A. and I. Sc. University Examinations.

4. In addition to a number of half-free studentships the College awards every year the following scholarships and stipends, each of which is tenable for two consecutive sessions:—

(A) To third year students.

One K. C. Sarkar Scholarship of Rs. 15 a month.

One Rani Monmohini Scholarship of Rs. 10 a month.

Two Rani Monmohini Scholarships of Rs. 8 a month.

One Rajshahi College Scholarship of Rs. 5 a month.

One Mayo Memorial Scholarship of Rs. 4 a Month.

Two Mohsin Stipends of Rs. 5 a month each.

(B) To first year students.

One Rani Monmohini Scholarship of Rs. 8 a month.

Two Mohsin Stipends of Rs. 5 a month each.

5. There are commodious and well-equipped, two-storied Government hostels both for Hindus and Muhammadans. Hostel charges payable every month total Rs. 13 for Hindus and Rs. 12 for Muslims. Besides an excellent gymnasium, the College has arrangements for almost all popular games and physical exercises including rowing, water polo and swimming.

6. The scale of monthly tuition fees is Rs. 6 for I. A. and B. A. (Pass or Honours), Rs. 7 for I. Sc and Rs. 8 for B. Sc. students. The science laboratories are well-appointed and the College has its own power house and electric installation.

7. Twenty-five per cent. of the vacancies in each class will be reserved for Mahomedan students, if necessary; but this reservation will not hold good if sufficient applications are not received at least one week before the day on which the College re-opens.

8. Applications for admission should be made in the prescribed form immediately after the publication of the University results.

Admission forms and prospectus can be had from the College office on personal application or by sending a postage stamp of nine pies. Students who failed in the University Examination and desire re-admission should attach the University Admit Card and their Crossed list to their application.

H. GANGULI, *Professor-in-charge.*

Chittagong Medical School.

Chittagong, the 9th June 1936.

Admission to the Compounder Class—Session 1936-37.

Applications for admission to the compounders' class of the Chittagong Medical School will be received up to the 31st July 1936.

Application should be supported by—

(1) A true copy of certificate of passing the Matriculation or its accepted equivalent examination.

(2) A certificate of good character from a Deputy Magistrate or a gentleman of equal position or from the Principal or Head Master of the College or School in which the candidate last studied.

(3) A certificate of age. Matriculation certificate or a certificate from the head of the institution in which the candidate last studied will be accepted as evidence of age.

The applications from the candidates must reach the office of the Superintendent on or before the 31st July 1936 for registration of their names and they must attend for personal interview on Saturday, the 1st August 1936, at 9 a.m., at the office of the Superintendent, Chittagong Medical School, together with the original certificates.

Late and incomplete applications will not be entertained.

Every male student who is selected for admission shall pay an entrance fee of Rs. 4 and first half-yearly instalment of Rs. 12 tuition fees. He shall also pay the annual sports and athletic club fee of Rs. 2.

G. B W FISHER, CAPT., I M S,
Superintendent, Chittagong Medical School.

Chittagong Division.

Chittagong, the 18th June 1936.

Rules for the guidance of private candidates for the Matriculation Examination of 1937.

The following rules for the guidance of private candidates for the Matriculation Examination are published for general information:

1. Private students are those who have not attended any recognised or unrecognised school for at least one year previous to the examination. The term "private students" includes *bonâ fide* school-masters.

2. Private students must appear at the Test Examination of one of the following institutions on the dates mentioned below :—

Comilla Zilla School, Noakhali R. K. Zilla School, Chittagong Collegiate School and Rangamati High English School.

Dates of examination—4th, 5th, 6th, 7th and 8th January 1937.

Female candidates and teachers of schools recognised by the Calcutta University, or any other University or any Board of Secondary Education in India or by the Department are not required to pass the Test Examination for private candidates held by the Inspector of Schools, Chittagong Division.

3. Private candidates offering hygiene as one of their subjects need not obtain the previous permission of the University for that purpose. They will be required to satisfy the Inspector of Schools that they have undergone a course of training in the subject. For this purpose they should submit to the Divisional Inspector of Schools, along with their applications for permission to appear at the Test Examination, certificates of training in it from a recognised medical practitioner or from a recognised teacher in hygiene.

4. Each private student will pay a fee of Rs. 5 to the head of the institution in which he appears for the Test Examination. No private student will be admitted to the Test Examination unless he is accompanied for the purpose of identification by some person known to the headmaster of the institution in which he appears.

5. Application for permission to appear at the Test Examination must be sent in time in duplicate in the enclosed form so as to reach this office not later than the 20th November 1936.

N. B. -A student who failed to pass or appear at the annual examination for promotion to class X at the end of the session 1935 and then left the school can, under no circumstances, be allowed to appear at the Test Examination.

6. The Inspector on being satisfied will grant necessary permission and return the application, which will then be the candidate's passport for admission to the Test Examination.

7. Every candidate must deposit his fee for the Test Examination with the headmaster of the institution in which he intends to appear at least 18 days before the date of that examination. The headmaster will deposit the amount realised by him into the local Treasury and forward a copy of the Treasury chalan to this office. He should also submit to this office an account of the charges incurred by him (including remuneration to examiners) for conducting the examination of private candidates, together with vouchers in support of the charges, on receipt of which the Director of Public Instruction will be moved to sanction the expenditure.

8. The headmasters of the institutions named in paragraph 2 above should direct private candidates who satisfy the test to appear before them in due time, with their applications for admission to the Matriculation Examination, and to sign them in their presence. They will then grant the necessary certificate and forward the applications to the Inspector for countersignature, after which they will be returned to the headmasters for delivery to the candidates concerned.

9. In no circumstances should the fee for the Matriculation Examination be sent to the Inspector's office. It should be sent to the Controller of Examinations, Calcutta University, by the candidates themselves, together with the countersigned applications.

10. Private students must understand that the Test Examination of any school other than those named above will not be accepted by the Inspector.

11. The Matriculation Examination will be held in March 1937, the exact dates of which will be notified by the University.

12. Applications and fees for admission to the Matriculation Examination must reach the office of the Controller of Examinations on or before the date to be fixed by the University.

A. RAHMAN KHAN,

Inspr. of Schools, Chittagong Division (offg.).

To be submitted in duplicate.

To the Inspector of Schools, Chittagong Division.

Sir,

I have the honour to solicit permission to appear at the Test Examination of the school. The particulars required under the rules are supplied below :—

1. I studied last at the school. I appeared at the Matriculation Examination of 19 but failed.

2. The transfer certificate is enclosed.

The Controller's receipt is enclosed.

3. My age (1) on the 1st March 193 will be yrs. ms.

4. A certificate (2) from a respectable gentleman is enclosed.

5. A certificate (3) of good conduct from the Secretary of the school in which I have been serving is enclosed.

6. Residence—Village P. O.

District.

7. Father's name.

8. Second language besides English.

9. Vernacular language for composition.

10. Vernacular language from which translation is to be made into English in the 1st English paper.

I have taken up the following subjects :—

(*a*) Additional Mathematics.
(*b*) Additional paper in the classical language.
(*c*) History.
(*d*) Geography.
(*e*) Elementary Mechanics.

I have the honour to be,

Sir,

Your most obedient pupil,

Address—

Dated

The 193

Orders by the Inspector of Schools, Chittagong Division.

Memo. No.

Chittagong, the 193

The permission asked for is granted.

Inspector of Schools, Chittagong Division.

Memo. No.

Chittagong, the 193

Copy forwarded to the Headmaster School for information and guidance.

Inspector of Schools, Chittagong Division.

N. B.—Strike out the portion not required.

(1) No candidate who will not have completed the age of 15 years on the first day of the Matriculation Examination will be allowed to appear at it.

(2) The certificate should be to the following effect :—

"I hereby certify that I know..... He has prosecuted a regular course of study and has been subject to proper discipline. He has not read in any school since the last Matriculation Examination."

(3) Required in the case of a teacher candidate only.

Education Department, Bengal.

NOTIFICATION.

Calcutta, the 18th June 1936.

No. 4T.B.—It is hereby notified for general information that books suitable for school libraries and for prizes (including books for juvenile reading), books of reference and books designed for the use of teachers for Primary and Secondary Schools, will be received for consideration by the Secretary, Provincial Text-book Committee (Writers' Buildings, Block No. V, First Floor, Room No. 2) at any time during the year in the manner detailed below. But books received up to the 15th October 1936 will be considered this year for inclusion in the next approved list.

Four printed copies of each book should be submitted together with an application in the following form :—

(*i*) Name of book.
(*ii*) Name of author.
(*iii*) Name of publisher.
(*iv*) Address of author or publisher.
(*v*) Name and address of press where printed.
(*vi*) Purpose for which submitted.
(*vii*) Price.

A sum of Rs. 6 should be paid as fee for each book. A chalan showing payment into a Government Treasury in Bengal of this sum should accompany the application submitting each book to the Committee. Fees once deposited will not be refunded.

Two declarations as shown below should be forwarded to this office for record along with the submission of a book to the Text-book Committee.

(*i*) I (We) declare that I (We) am (are) the author(s) of the book entitled.....and published by .....

Signature of author (s).

Dated.....

(*ii*) I (We) declare that no copyright material has been used in the book entitled..... ...../necessary permission has been obtained for the copyright material that has been used in the book entitled.....

Signature of author(s) or publisher(s).

Dated.....

The following particulars should be given in each Treasury chalan for each book. Chalan forms may as well be obtained from this office :—

(*i*) Name of book and its author.
(*ii*) Purpose for which submitted.
(*iii*) Amount of fees deposited.

J. M. BOTTOMLEY,
Director of Public Instruction, Bengal.

Orders by the Vice-Chancellor and Syndicate of the Calcutta University.

Senate House, the 20th June 1936.

NOTIFICATION No. C/4481/AFFL.

It is hereby notified for general information that, under section 22, read with section 21, subsection (*3*) of the Indian Universities Act, 1904 (VIII of 1904), as amended by the Calcutta University Act, 1921 (VII of 1921), the Government of Bengal (Ministry of Education) are pleased to order that, with effect from the commencement of the session 1936-37, the Asutosh College, Bhowanipore, shall be affiliated to the Calcutta University in Sanskrit to the B. A. Honours Standard.

J. CHAKRAVORTI, *Registrar.*

Orders by the Vice-Chancellor and Syndicate of the Calcutta University.

Senate House, the 25th June 1936.

The undermentioned candidates are declared to have passed the D. P. H. Examination, Part II, held in May 1936 :—

(In alphabetical order.)

Datta, Santosh Kumar.
Mukhopadhyay, Nripatinath.
Raghbir Sahai Bhatnager.
4 Sayed Ahmed.

B. B. DUTT,
Controller of Examinations.

Calcutta University.

Senate House, the 18th June 1936.

ADDENDUM.

In addition to the name of candidates declared to have passed the Preliminary Scientific M.B. Examination, April 1936, as published in the *Calcutta Gazette*, dated the 4th June 1936, on page 840, the undermentioned candidate is also declared to have passed :—

J. D. V. Fitzpatrick .. Medical College, Calcutta.

B. B. DUTT,
Controller of Examinations.

Admission to the Compounders' Class, Ronaldshay Medical School, Burdwan—Session 1936-37.

Burdwan, the 26th June 1936.

Applications for admission to the Compounders' class of the Ronaldshay Medical School, Burdwan, will be received up to the 10th August 1936, except on Sundays and public holidays.

Applications should be supported by—

(*a*) A true copy of certificate of passing the Matriculation or its accepted equivalent examination.

(*b*) A testimonial of good moral character from a gazetted officer or a gentleman of equal position or from the Principal or Head Master of the college or school in which the candidate last studied. (Where more than six weeks have elapsed between the date of leaving college or school and the date of application for admission, a second certificate of character is required covering the intervening period. This should be obtained from a gazetted officer or a gentleman of equal position such as an Honorary Magistrate having an intimate knowledge of the applicant.)

(*c*) A certificate of age—Matriculation certificate or a certificate from the head of the institution in which the candidate last studied will also be accepted as evidence of age.

Applications from the candidates must reach the office of the Superintendent on or before the 10th August 1936 for registration of their names and they must attend for personal interview on Tuesday, the 25th August 1936, at 11 a.m., at the office of the Superintendent, Ronaldshay Medical School, Burdwan, together with the original certificates.

Late or incomplete applications will not be considered.

Note.—Every male student who is selected for admission shall pay an entrance fee of Rs. 4 and first half-yearly instalment of Rs. 12 tuition fee. He shall also pay the amount of sports and athletic club fee of Rs. 2. The session will begin from 1st September 1936.

E. H. LOSSING, CAPTAIN, I.M.S., *Supdt.*,
Ronaldshay Medical School, Burdwan.

Registered No. C207

The Calcutta Gazette

THURSDAY, JULY 2, 1936.

PART II

Advertisements.

Notices

Advertisements, Notices, etc., intended for insertion in this part of the Gazette must be sent to Press before 12 noon on Saturday, and all costs deposited and proofs returned by 4 p.m. on Monday. Manuscripts and postal remittances must be addressed to Superintendent, Government Printing (Publication Branch), Bengal Government Press, Alipore.

For the convenience of advertisers located in Calcutta, arrangements have been made to accept advertisements and prepayment of charges at Sales Office, Ground Floor, Writers' Buildings, Calcutta. The latest time for receipt of advertisements for current week's Gazette has been extended till 4 p.m. on Mondays.

Land Sale Notices.

NOTICE is hereby given under section 6, Act XI of 1859, that the undermentioned estates in the district of Jalpaiguri will be put up for sale at the office of the Collector of that district on the 20th July 1936 at 12 noon for arrears of revenue (and other demands which by law are realisable as arrears of land revenue) :—

Tauzi No.	Name of mahal and pargana.	Sadar jama of whole estate.	Whether the whole estate is to be sold.	If only a share is to be sold, specification of such share or shares.	Names of proprietors of property to be sold.	If only a share is to be sold, the sadar jama of such share.	If the whole estate is to be sold, the arrears due from it.	If only a share is to be sold, the arrears due from it.
1	2	3	4	5	6	7	8	9
		Rs. a. p.					Rs. a. p.	
83	*Ambari-Falakata, Jote No. 26.	677 12 0	Whole	....	Hepajuddin Md. and others.	..	948 12 6	..
88	†Ambari-Falakata, Jote No. 29.*	652 4 0	Do. ..	....	Abdul Latif and others.	..	987 6 8	..

*This jote is being advertised for sale for instalments of revenue which were due on or before the 28th February 1935, 30th November 1935, 28th February 1936, of which the latest dates of payment were 28th March 1935, 12th January 1936, 28th March 1936, respectively.

†This jote is being advertised for sale for instalments of revenue which were due on or before the 30th November 1934, 28th February 1935, 30th November 1935, 28th February 1936, of which the latest dates of payment were 12th January 1935, 28th March 1935, 12th January 1936, 28th March 1936, respectively.

J. C. MAJUMDAR, *for* Deputy Commissioner.

Jalpaiguri, the 9th June 1936.

Advertisement of sale.

NOTICE is hereby given that the undermentioned plot of land, no longer required by Government, situated along the B. A. K. Section of the East Indian Railway in the district of Murshidabad, will be put up to sale at 12 noon on the 17th August 1936 corresponding to 1st Bhadra, 1343 B. S. (Fasli) at the Court of the Subdivisional Officer, Jangipur, district Murshidabad.

The purchasers of the plot of land will be subject to the following conditions :—

1st.—The purchaser will have no power to make any excavations on the land nearer than fifteen feet from the railway boundary or to plough the land nearer than three feet from the same.

2nd.—If the amount of purchase-money does not exceed Rs. 100, the whole amount must be paid down at once.

3rd.—If the amount of purchase-money exceeds Rs. 100, one-fourth of the amount must be immediately deposited. If the balance be not paid by noon of the fifteenth day after the sale, reckoning the day of sale as one, or if that day be a close holiday, then by noon of the first succeeding office day, the sale shall be cancelled, the sum deposited being forfeited to Government and the lot again put up for sale at the risk of the defaulting purchaser after issue of advertisement as in the case of original sale.

4th.—The plot of land will be sold subject to an annual assessment of Rs. 25 which will be subject to revision at the next general settlement of the temporarily-settled estates of the district to the highest bidders.

5th.—The sale will become final on receipt by the Collector of the orders of the Commissioner confirming it, and a regular conveyance will then be granted to the purchaser.

Consecutive lot No.	Name of district.	Pargana and mauza.	Number of mile on which land is situated.	Situated on which side of the railway.	Approximate area of lot in acres and decimals.	Land excluded from sale from each lot.		Commencement and termination of lot.	Boundary of lot.
						Reasons for exclusion.	Acres and decimals.		
1	2	3	4	5	6	7		8	9
	Murshidabad	Pargana Gankar and Joar Birahimpur, village Kanupur, J. L. No. 1.	Mile No. 69 of B. A. K. Section of E. I. Rly.	On the eastern side of the railway line.	22·38 acres comprising settlement plot No. 477 of mauza Kanupur, J. L. No. 1.	Nil	Nil	Commencing from chainage 118·988 and terminating in chainage 119·530.	North—By Phalgu nalla, cadastral survey plot No. 372 of mauza Kanupur, J. L. No. 1 (police-station Raghunathganj). South—By road from Raghunathganj to Baluital, cadastral survey plot No. 579 of mauza Kanupur, J. L. No. 1 (police-station Raghunathganj). East—By district board road from Ramnagar to Farakka, cadastral survey plot No. 1016 of mauza Kanupur, J. L. No. 1 (police-station Raghunathganj). West—By railway land, cadastral survey plot No. 474 of mauza Kanupur, J. L. No. 1 (police-station Raghunathganj).

Berhampore, the 16th June 1936.

L. G. DURNO, Collector.

In the 2nd Court of the Munsif of Hooghly.

MONEY EXECUTION CASE No. 69 OF 1936.

Sarojnath Mukherji of Uttarpara, decree-holder

versus.

Kumar Sanat Kumar Mukherjee of Uttarpara, judgment-debtor.

IT is hereby notified that on the application of the decree-holder in connection with Money Execution Case No. 69 of 1936 the following properties will be sold to the highest bidder subject to the Court's approval at public auction to be held by the Nazir of the Court in the Court verandah (ground floor) at 12 noon on the 18th day of August 1936 and any intending purchaser may offer bid for the purpose :—

Schedule of the properties.

One-third share of Patni taluk in respect of the eight annas share of lot Dwarbashini in tauzi No. 6 of the Hooghly Collectorate in the district of Hooghly belonging to the aforesaid judgment-debtor, valued at Rs. 5,000.

G. S. CHATTERJEE, Munsif,
2nd Court.

Hooghly, the 11th June 1936. (1236—1)

SALE NOTICE.

In the Court of the Sub-Judge of Rajshahi.

RE MONEY EXECUTION CASE No. 178 OF 1935.

Nani Lal Roy and others, decree-holders,

versus

Binoy Kumar Mandal and another, judgment-debtors.

NOTICE is hereby given that, under order of the Subordinate Judge of Rajshahi, the property mentioned in the schedule below will be sold on the 15th day of August 1936, at 12 noon, by the Nazir of the District Judge, Rajshahi, the amount due under the decree is Rs. 947-1-3 ;—

Schedule.

½ share of the judgment-debtors in 5 annas 6 gandas 2 caras and 2 krantis share of mahal Kaligaon-Kalisafa in police-station Manda, district Rajshahi, bearing tauzi No. 345 of the Rajshahi Collectorate.

[ILLEGIBLE], *for* Sub-Judge.

Rajshahi, the 22nd June 1936. (1285—1)

In the Court of the Sub-Judge, Noakhali.

T. EX. CASE No. 158 OF 1935.

Claim—Rs. 5,876-15-9 pies.

Date of sale—3rd August 1936.

His Highness Maharaja Bir Bikram Kisore Manikya Bahadur, decree-holder,

versus

Kamini Kumar Bal and others, judgment-debtors.

PROPRIETARY right and title of judgment-debtor No. 17 Jatindra Mohan Mukhopadhya to the extent of 6 gandas and 2 karas and 10 tils share of the permanently-settled estate, pargana Jugidia, zamindary Asali, Taraf Muktapran Deba Roy, Taraf Ramaram Ratan Raj Ballavdas Choudhury, Taraf Sonashova Darpa Protap Kriti Chhatramani Gupta Choudhury with reformations *in situ* bearing tauzi No. 11 in A Register No. 791 of the Noakhali Collectorate. Annual land revenue payable being Rs. 24,782-1-8 pies only with accretions to the said estate in which the proprietors of the said tauzi No. 11 have got right of proprietary settlement, the said accreted lands being T. S. P. estates situated in the following mauzas and bearing tauzi numbers as stated below :—

Name of accreted villages.	Tauzi No. of the Noakhali Collectorate.
Char Khondakar ..	1560.
Diara Thak Darbesh ..	1772 and 1585.
Khoyajer Lamchi ..	1586
Char Sonapur and mauza Char Sonapur Lamchi ..	1969
Char Chandia ..	1971
Thak Darbesh ..	1972

Annual revenue of the abovementioned share of the judgment-debtor No. 17 Jatindra Mohan Mukhopadhya is about Rs. 505-12-10 × 17½ kranta.

S. C. SEN, Sub-Judge.

Noakhali, the 18th June 1936. (1280—1)

In the High Court of Judicature at Fort William in Bengal, in Insolvency.

NOTICE OF ADJUDICATION ORDER.

No. 79 of 1936.

Re Benarshilal Jhunjhunwalla, residing at No. 41, Daccaputty, in the town of Calcutta, at present of no occupation, ex-parte the creditor.

P. D. Himatsingka & Co., creditor's solicitors.

ON the 16th day of June 1936, an order was made by the High Court of Judicature at Fort William in Bengal in its insolvency jurisdiction adjudging the abovenamed as an insolvent.

Note.—All debts due to the estate should be paid to me.

Dated this 26th day of June 1936.

G. M. FALKNER, Official Assignee.

In the High Court of Judicature at Fort William in Bengal, in Insolvency.

No. 147 of 1934.

Re Estate Sitaram Ramavatar.

NOTICE is hereby given that a dividend is intended to be declared in this estate. Persons claiming to be creditors of the above estate are required to file their claims with affidavits, supported by vouchers, on or before the 11th July 1936, after which date no claims received by the undersigned will be considered.

Persons who have already lodged their claims need not file fresh claims.

A form of proof of debt may be had on application from the undersigned.

G. M. FALKNER, Official Assignee.

10, Old Post Office Street, Calcutta, the 18th June 1936. (1238—1)

In the Court of the District Judge of Bankura.

INSOLVENCY CASE No. 2 OF 1935.

Kedar Nath Barat Modak, son of late Tara Chand Barat Modak, of Bankura town, district Bankura, insolvent.

NOTICE is hereby given to his creditors that the abovenamed insolvent has been finally discharged from insolvency by order of this Court, dated the 6th June 1936.

S. K. GANGULI, District Judge.

Bankura, the 20th June 1936. (1243—1)

In the Court of the District Judge at Bogra.

INSOLVENCY CASE No. 4 OF 1936.

NOTICE is hereby given that the debtor Dharanidhar Shaha, son of Haladhar Shaha, of village and police-station Shariakandi, district Bogra, was adjudged insolvent on 18th May 1936 by an order of this Court and he was directed to apply for his discharge within a year.

N. BANERJI, Ex-officio Registrar.

Bogra, the 22nd June 1936. (1282—1)

In the Court of the District Judge at Bogra.

INSOLVENCY CASE No. 2 OF 1936.

NOTICE is hereby given that the debtor Madan Mohan Sarker, son of late Manik Chandra Sarker, of Biswa, police-station Sherpur, district Bogra, was adjudged insolvent on 18th April 1936 by an order of this Court and he was directed to apply for his discharge within a year.

N. BANERJI, Ex-officio Registrar.

Bogra, the 22nd June 1936. (1283—1)

NOTICE OF DISCHARGE.

Section 41 of the Provincial Insolvency Act, V of 1920.

In the Court of the District Judge of Pabna-Bogra.

INSOLVENCY CASE No. 44 OF 1935.

NOTICE is hereby given that insolvent Abinash Chandra Lahiri, son of late Nanda Kumar Lahiri, of Haturia, police-station Bera, district Pabna, has applied for his final discharge, and the 13th July 1936 has been set down for hearing of the application.

S. N. MODAK, District Judge.

Pabna, the 22nd June 1936. (1284—1)

NOTICE TO CREDITORS OF THE DATE OF HEARING OF AN INSOLVENCY PETITION.

Section 19 of the Provincial Insolvency Act, V of 1920.

In the Court of the District Judge at Chittagong.

INSOLVENCY APPLICATION No. 17 OF 1936.

WHEREAS debtor Raham Ali, son of Mohamed Wali, of village Silimpur, police-station Sitakunda, post-office Jafarabad, district Chittagong, has applied to this Court, by a petition, dated 20th day of May 1936, to be declared an insolvent under the Provincial Insolvency Act, V of 1920, this is to give notice that the Court has fixed the 21st day of July 1936 for the hearing of the aforesaid petition and the examination of the debtor.

J. GEORGE, *for* District Judge.

Chittagong, the 16th June 1936. (1239—1)

ORDER OF ADJUDICATION.

Section 27 of the Provincial Insolvency Act, V of 1920.

In the Court of the District Judge at Chittagong.

INSOLVENCY APPLICATION No. 1 OF 1936.

PURSUANT to a petition, dated 6th January 1936, filed by the debtor Naba Kumar Dev Das, son of late Radha Krishna Matbar, of Shekherkhil, police-station Banskhali, Chittagong, and on the application of the debtor himself and on reading his petition and hearing his pleader, it is ordered that the debtor be and the said debtor is hereby adjudged insolvent.

It is further ordered that the debtor do apply for his discharge before 15th June 1937, and the application will be heard on 15th July 1937. Mr. J. R. Perceval is appointed receiver.

Dated this 15th day of June 1936.

H. G. WAIGHT, District Judge.

(1240—1)

In the Court of the District Judge at Darjeeling.

INSOLVENCY CASE No. 1 OF 1936.

Hastaman Gurung, son of Ticca Ram Gurung, of Woodlands Hotel Estate, Darjeeling, applicant.

WHEREAS the abovenamed applicant has applied to this Court by a petition to be declared an insolvent and the Court has fixed the 15th day of July 1936 for hearing of the petition at Darjeeling, any one desiring to be represented in the matter may appear in person or by a duly authorised agent before the District Judge at Darjeeling on the date fixed at 10-30 o'clock, forenoon.

B. C. SEN, Ex-officio Registrar.

Darjeeling, the 16th June 1936.

(1242—1)

In the Court of the District Judge of Dinajpur.

INSOLVENCY CASE No. 21 OF 1936.

DEDRAJ AGARWALA, son of late Surajmal Agarwala, of 26, Baltala Street, Calcutta, one of the creditors, has applied to this Court to adjudge Chiman Lal Agarwala, son of late Kanaiya Lal Agarwala, and Hiralal Agarwala, son of Hiyalal Agarwala, of Setabganj, police-station Bochaganj, district Dinajpur, debtors, insolvents.

The 18th day of July 1936 has been fixed for hearing the application at Dinajpur.

[ILLEGIBLE], *for* District Judge.

Dinajpur, the 20th June 1936. (1237—1)

NOTICE TO CREDITORS OF THE DATE OF HEARING OF AN INSOLVENCY PETITION.

In the Court of the District Judge of Midnapore.

INSOLVENCY CASE No. 49 OF 1936.

WHEREAS Md. Mamtaz and four others, creditors of Kharida, thana Khargpur, district Midnapore, have applied to this Court by a petition, dated 16th May 1936, to declare T. H. Callanun, Clerk, C.M.E.'s Office, B. N. Railway, Khargpur, district Midnapore, debtor, an insolvent under the Provincial Insolvency Act, V of 1920, this is to give the creditors notice that the Court has fixed the 18th day of July 1936 for the hearing of the aforesaid petition.

S. K. HALDAR, District Judge.

Midnapore, the 24th June 1936. (1286—1)

In the Court of the District Judge of 24-Parganas.

INSOLVENCY CASE No. 21 OF 1936.

Jagat Taran Samanta of Bura Shibtola Road, Shahpur, police-station Behala, 24-Parganas, applicant.

To Raghunath Roy Hargovinda of 402, Upper Chitpore Road, Calcutta, and others, creditors.

ON the 17th day of June 1936 it was ordered that the matter of the petition of the applicant be heard on the 20th day of July 1936, and that the said applicant do attend to be examined by this Court on that date.

T. H. ELLIS, District Judge.

Alipore, the 18th June 1936. (1244—1)

In the 4th Court of the Sub-Judge of 24-Parganas.

INSOLVENCY CASE No. 164 OF 1936.

Mahammad Safique of 29, Elgin Road, Bhowanipore, 24-Parganas, applicant.

To Manindralal Chaudhury of 11B, Surendra Nath Banerjee Road, Calcutta, and others, creditors.

ON the 8th day of June 1936 it was ordered that the matter of the petition of the applicant be heard on the 13th day of July 1936, and that the said applicant do attend to be examined by this Court on that date.

P. N. CHAUDHURI, Sub-Judge.

Alipore, the 11th June 1936. (1245—1)

In the 4th Court of the Sub-Judge of 24-Parganas.

INSOLVENCY CASE No. 229 OF 1936.

Surendranath Biswas *alias* H. Samuel of 23A, Nurali Lane, police-station Beniapukur, 24-Parganas, applicant.

To Hrishikesh Das of 42-10, Doctor Lane, Calcutta, and others, creditors.

ON the 5th day of June 1936 it was ordered that the matter of the petition of the applicant be heard on the 20th day of July 1936, and that the said applicant do attend to be examined by this Court on that date.

P. N. CHAUDHURI, Sub-Judge.

Alipore, the 11th June 1936. (1246—1)

In the 4th Court of the Sub-Judge of 24-Parganas.

INSOLVENCY CASE No. 246 OF 1936.

Ramdhari Pashman of 4, Watgunj Road, Dalpati, 24-Parganas, applicant.

To Sewnath Sah Agarwala of 8, South Road Entally, 24-Parganas, and others, creditors.

ON the 2nd day of June 1936 it was ordered that the matter of the petition of the applicant be heard on the 13th day of July 1936, and that the said applicant do attend to be examined by this Court on that date.

P. N. CHAUDHURI, Sub-Judge.

Alipore, the 17th June 1936. (1247—1)

In the 4th Court of the Sub-Judge of 24-Parganas.

INSOLVENCY CASE No. 248 OF 1936.

Mohan Chamar Jossowara of Titagarh, 24-Parganas, applicant.

To Dewan Sing of Titagarh, 24-Parganas, and others, creditors.

ON the 2nd day of June 1936 it was ordered that the matter of the petition of the applicant be heard on the 13th day of July 1936, and that the said applicant do attend to be examined by this Court on that date.

P. N. CHAUDHURI, Sub-Judge.

Alipore, the 17th June 1936. (1248—1)

In the 4th Court of the Sub-Judge of 24-Parganas.

INSOLVENCY CASE No. 250 OF 1936.

Devilal Dosad of 17, Rakhal Mukherjee Road, police-station Bhowanipore, 24-Parganas, applicant.

To Ram Kissen Pandey of Dum Dum Cantonment, 24-Parganas, and others, creditors.

ON the 6th day of June 1936 it was ordered that the matter of the petition of the applicant be heard on the 20th day of July 1936, and that the said applicant do attend to be examined by this Court on that date.

P. N. CHAUDHURI, Sub-Judge.

Alipore, the 12th June 1936. (1249—1)

In the 4th Court of the Sub-Judge of 24-Parganas.

INSOLVENCY CASE No. 251 OF 1936.

Enat Ali Mallick of Cossipore, police-station Budge Budge, 24-Parganas, applicant.

To Etin Sheik of Sankpukur, 24-Parganas, and others, creditors.

ON the 5th day of June 1936 it was ordered that the matter of the petition of the applicant be heard on the 20th day of July 1936, and that the said applicant do attend to be examined by this Court on that date.

P. N. CHAUDHURI, Sub-Judge.

Alipore, the 17th June 1936. (1250—1)

In the 4th Court of the Sub-Judge of 24-Parganas.

INSOLVENCY CASE No. 252 OF 1936.

Mahammad Ali of 17-1, Beg Bagan Row, police-station Ballygunge, 24-Parganas, applicant.

To Haji Mohammad Nowsher Ali of 3, Ahiripukur 1st Lane, Calcutta, and another, creditors.

ON the 5th day of June 1936 it was ordered that the matter of the petition of the applicant be heard on the 20th day of July 1936, and that the said applicant do attend to be examined by this Court on that date.

P. N. CHAUDHURI, Sub-Judge.

Alipore, the 17th June 1936. (1251—1)

In the Court of 4th the Sub-Judge of 24-Parganas.

INSOLVENCY CASE No. 253 OF 1936.

Nripendranath Ghose of 12-2B, Satchasipara Lane, police-station Cossipore, 24-Parganas, applicant.

To Sher Khan Kabuli of Narikelbagan, post office Cossipore, 24-Parganas, and others, creditors.

ON the 6th day of June 1936 it was ordered that the matter of the petition of the applicant be heard on the 20th day of July 1936, and that the said applicant do attend to be examined by this Court on that date.

P. N. CHAUDHURI, Sub-Judge.

Alipore, the 11th June 1936. (1252—1)

In the 4th Court of the Sub-Judge of 24-Parganas.

INSOLVENCY CASE No. 254 OF 1936.

Shamsuddin Mullick *alias* S. Mullick, H. M. B., of 35, Mominpore Road, police-station Ekbalpore, 24-Parganas, applicant.

To Karim Khan of 34, Circular Garden Reach Road, Kidderpore, 24-Parganas, and others, creditors.

ON the 6th day of June 1936 it was ordered that the matter of the petition of the applicant be heard on the 20th day of July 1936, and that the said applicant do attend to be examined by this Court on that date.

P. N. CHAUDHURI, Sub-Judge.

Alipore, the 12th June 1936. (1253—1)

In the 4th Court of the Sub-Judge of 24-Parganas.

INSOLVENCY CASE No. 255 OF 1936.

Kali Charan Pal of Joy Krishna Ghosal Road, Ariadaha, 24-Parganas, applicant.

To Nut Behari Mondal of Joy Krishna Ghosal Road, Ariadaha, 24-Parganas, and others, creditors.

ON the 6th day of June 1936 it was ordered that the matter of the petition of the applicant be heard on the 20th day of July 1936, and that the said applicant do attend to be examined by this Court on that date.

P. N. CHAUDHURI, Sub-Judge.

Alipore, the 11th June 1936. (1254—1)

In the 4th Court of the Sub-Judge of 24-Parganas.

INSOLVENCY CASE No. 268 OF 1936.

Biswanath Ghosh of 17-1, Matilal Basak Garden Lane Narikeldanga, 24-Parganas, applicant.

To Sagor Rakshit of 156-3, Beadon Street, Calcutta, and others, creditors.

ON the 9th day of June 1936 it was ordered that the matter of the petition of the applicant be heard on the 20th day of July 1936, and that the said applicant do attend to be examined by this Court on that date.

P. N. CHAUDHURI, Sub-Judge.

Alipore, the 17th June 1936. (1255—1)

NOTICE TO CREDITORS OF APPLICATION FOR DISCHARGE.

Section 41 (*1*) of the Provincial Insolvency Act, V of 1920.

In the 4th Court of Sub-Judge at Alipore.

INSOLVENCY CASE No. 130 OF 1935.

Bhabendra Nath Purkait of Bhagabatipore, police-station Mothurapore, 24-Parganas, applicant.

TAKE notice that the abovenamed insolvent has applied at the Court for his discharge and that the Court has fixed the 20th day of July 1936 at 11 o'clock for hearing the application.

Dated this 11th day of June 1936.

P. N. CHAUDHURI, Sub-Judge.

(1256—1)

NOTICE TO CREDITORS OF APPLICATION FOR DISCHARGE.

Section 41(*1*) of the Provincial Insolvency Act, V of 1920.

In the 4th Court of the Sub-Judge at Alipore.

INSOLVENCY CASE No. 141 OF 1936.

E. P. D. Doaker of 71, Loco Quarters, Narikeldanga, 24-Parganas, applicant.

TAKE notice that the abovenamed insolvent has applied at the Court for his discharge, and that the Court has fixed the 20th day of July 1936 at 11 o'clock for hearing the application.

Dated this 17th day of June 1936.

P. N. CHAUDHURI, Sub-Judge.

(1257—1)

NOTICE TO CREDITORS OF APPLICATION FOR DISCHARGE.

Section 41(1) of the Provincial Insolvency Act, V of 1920.

In the 4th Court of the Sub-Judge at Alipore.

INSOLVENCY CASE No. 155 OF 1935.

M. O. Dossey of Cossipore Power House, Cossipore, 24-Parganas, applicant.

TAKE notice that the abovenamed insolvent has applied at the Court for his discharge, and that the Court has fixed the 20th day of July 1936 at 11 o'clock for hearing the application.

Dated this 11th day of June 1936.

P. N. CHAUDHURI, Sub Judge.

(1258—1)

NOTICE TO CREDITORS OF APPLICATION FOR DISCHARGE.

Section 41(1) of the Provincial Insolvency Act, V of 1920.

In the 4th Court of the Sub-Judge at Alipore.

INSOLVENCY CASE No 166 OF 1935.

Pulin Behary Das Gupta of firm Dinshaw and Sorabjee at Sealdah, 24-Parganas, applicant.

TAKE notice that the abovenamed insolvent has applied at the Court for his discharge, and that the Court has fixed the 20th day of July 1936 at 11 o'clock for hearing the application.

Dated this 16th day of June 1936.

P. N CHAUDHURI, Sub-Judge.

(1259—1)

NOTICE TO CREDITORS OF APPLICATION FOR DISCHARGE.

Section 41(1) of the Provincial Insolvency Act, V of 1920.

In the 4th Court of the Sub-Judge at Alipore.

INSOLVENCY CASE No. 207 OF 1935

Bono Behary Dutt of 11, Roypara Road, police-station Cossipore, 24 Parganas applicant.

TAKE notice that the abovenamed insolvent has applied at the Court for his discharge and that the Court has fixed the 20th day of July 1936 at 11 o'clock for hearing the application.

Dated this 16th day of June 1936

P. N. CHAUDHURI, Sub-Judge.

(1260—1)

NOTICE TO CREDITORS OF APPLICATION FOR DISCHARGE.

Section 41(1) of the Provincial Insolvency Act, V of 1920.

In the 4th Court of the Sub-Judge at Alipore.

INSOLVENCY CASE No. 225 OF 1935.

S. I. Caston, Crewman, E. B. Railway, at Sealdah, applicant

TAKE notice that the abovenamed insolvent has applied at the Court for his discharge and that the Court has fixed the 20th day of July 1936 at 11 o'clock for hearing the application.

Dated this 17th day of June 1936

P. N. CHAUDHURI, Sub-Judge.

(1261—1)

NOTICE TO CREDITORS OF APPLICATION FOR DISCHARGE.

Section 41(1) of the Provincial Insolvency Act, V of 1920.

In the 4th Court of the Sub-Judge at Alipore.

INSOLVENCY CASE No. 239 OF 1935.

Sheik Ali Ahammad of 51-3, South Road, Entally, 24-Parganas, applicant.

TAKE notice that the abovenamed insolvent has applied at the Court for his discharge, and that the Court has fixed the 6th day of July 1936 at 11 o'clock for hearing the application

Dated this 12th day of June 1936.

P. N. CHAUDHURI, Sub-Judge

(1262—1)

NOTICE TO CREDITORS OF APPLICATION FOR DISCHARGE.

Section 41(1) of the Provincial Insolvency Act, V of 1920.

In the 4th Court of the Sub-Judge at Alipore.

INSOLVENCY CASE No. 304 OF 1935.

Sib Saran Sarkar of 4-1, Debnarayan Das Lane police-station Maniktola, 24-Parganas, applicant.

TAKE notice that the abovenamed insolvent has applied at the Court for his discharge, and that the Court has fixed the 13th day of July 1936 at 11 o'clock for hearing the application.

Dated this 17th day of June 1936.

P. N. CHAUDHURI, Sub-Judge.

(1263—1)

NOTICE TO CREDITORS OF APPLICATION FOR DISCHARGE.

Section 41(1) of the Provincial Insolvency Act, V of 1920.

In the 4th Court of the Sub-Judge at Alipore.

INSOLVENCY CASE No. 307 OF 1935.

Sheik Ibrahim of 7-3, Charakdanga Road, police-station Belaghata, 24-Parganas, applicant.

TAKE notice that the abovenamed insolvent has applied at the Court for his discharge, and that the Court has fixed the 13th day of July 1936 at 11 o'clock for hearing the application.

Dated this 12th day of June 1936.

P. N. CHAUDHURI, Sub-Judge.

(1264—1)

NOTICE TO CREDITORS OF APPLICATION FOR DISCHARGE.

Section 41 (1) of the Provincial Insolvency Act, V of 1920.

In the 4th Court of the Sub-Judge at Alipore.

INSOLVENCY CASE No. 325 OF 1935.

Kalidas Mitra of Bonomali Naskar Road, Behala, 24-Parganas, applicant.

TAKE notice that the abovenamed insolvent has applied at the Court for his discharge, and that the Court has fixed the 20th day of July 1936 at 11 o'clock for hearing the application.

Dated this 16th day of June 1936.

P. N. CHAUDHURI, Sub-Judge.

(1265—1)

NOTICE TO CREDITORS OF APPLICATION FOR DISCHARGE.

Section 41 (*1*) of the Provincial Insolvency Act, V of 1920.

In the 4th Court of the Sub-Judge at Alipore.

INSOLVENCY CASE No. 331 OF 1935.

Doyaram of 1, Bishop Lefroy Road, Bhowanipore, 24-Parganas, applicant.

TAKE notice that the abovenamed insolvent has applied at the Court for his discharge, and that the Court has fixed the 20th day of July 1936 at 11 o'clock for hearing the application.

Dated this 11th day of June 1936.

P. N. CHAUDHURI, Sub-Judge.
(1266—1)

NOTICE TO CREDITORS OF APPLICATION FOR DISCHARGE.

Section 41 (*1*) of the Provincial Insolvency Act, V of 1920.

In the 4th Court of the Sub-Judge at Alipore.

INSOLVENCY CASE No. 348 OF 1935.

Zafar Alam of 59, Beniapukur Road, Beniapukur, 24-Parganas, applicant.

TAKE notice that the abovenamed insolvent has applied at the Court for his discharge, and that the Court has fixed the 20th day of July 1936 at 11 o'clock for hearing the application.

Dated this 17th day of June 1936.

P. N. CHAUDHURI, Sub-Judge.
(1267—1)

ORDER OF ADJUDICATION.

Section 27 of the Provincial Insolvency Act, V of 1920.

In the 4th Court of the Sub-Judge at Alipore.

INSOLVENCY APPLICATION No. 556 OF 1935.

PURSUANT to a petition, dated 18th December 1935, filed by Gouri Sha of 7, Justice Dwarkanath Road, Bhowanipore, 24-Parganas, debtor, and on the application of the debtor himself and on reading his application and hearing his pleader, it is ordered that the debtor be and the said debtor is hereby adjudged insolvent.

It is further ordered that the debtor do apply for his discharge within 5th April 1937.

Dated this 2nd day of June 1936.

P. N. CHAUDHURI, Sub-Judge.
(1268—1)

ORDER OF ADJUDICATION.

Section 27 of the Provincial Insolvency Act, V of 1920.

In the 4th Court of the Sub-Judge at Alipore.

INSOLVENCY APPLICATION No. 7 OF 1936.

PURSUANT to a petition, dated 6th January 1936, filed by Sheik Haidar Ali of Jagaddal, police-station Jagaddal, 24-Parganas, debtor, and on the application of the debtor himself and on reading his application and hearing his pleader, it is ordered that the debtor be and the said debtor is hereby adjudged insolvent.

It is further ordered that the debtor do apply for his discharge within 15th December 1936.

Dated this 8th day of June 1936.

P. N. CHAUDHURI, Sub-Judge.
(1269—1)

ORDER OF ADJUDICATION.

Section 27 of the Provincial Insolvency Act, V of 1920.

In the 4th Court of the Sub-Judge at Alipore.

INSOLVENCY APPLICATION No. 15 OF 1936.

PURSUANT to a petition, dated 11th January 1936, filed by Gadadhar Banerjee of 15A, Satkori Mitter Lane, 24-Parganas, debtor, and on the application of the debtor himself and on reading his application and hearing his pleader, it is ordered that the debtor be and the said debtor is hereby adjudged insolvent.

It is further ordered that the debtor do apply for his discharge within 10th May 1937.

Dated this 2nd day of June 1936.

P. N. CHAUDHURI, Sub-Judge.
(1270—1)

ORDER OF ADJUDICATION.

Section 27 of the Provincial Insolvency Act, V of 1920.

In the 4th Court of the Sub-Judge at Alipore.

INSOLVENCY APPLICATION No. 17 OF 1936.

PURSUANT to a petition, dated 11th January 1936, filed by Rash Behary Das of Jadavpore, police-station Tollygunge, 24-Parganas, debtor, and on the application of the debtor himself and on reading his application and hearing his pleader, it is ordered that the debtor be and the said debtor is hereby adjudged insolvent.

It is further ordered that the debtor do apply for his discharge within 15th December 1936.

Dated this 8th day of June 1936.

P. N. CHAUDHURI, Sub-Judge.
(1271—1)

ORDER OF ADJUDICATION.

Section 27 of the Provincial Insolvency Act, V of 1920.

In the Court of the District Judge at Alipore.

INSOLVENCY APPLICATION No. 35 OF 1935.

PURSUANT to a petition, dated 8th November 1935, filed by debtor firm Guljorimal Devi Shaw of 65-1, Lansdowne Road Market, 24-Parganas, and on the application of the debtor firm and on reading its application and hearing its pleader, it is ordered that the debtor firm be and the said debtor firm is hereby adjudged insolvent.

It is further ordered that the debtor firm do apply for its discharge on 6th December 1937 from this date.

Dated this 1st day of June 1936.

T. H. ELLIS, District Judge.
(1272—1)

ORDER OF ADJUDICATION.

Section 27 of the Provincial Insolvency Act, V of 1920.

In the 4th Court of the Sub-Judge at Alipore.

INSOLVENCY APPLICATION No. 74 OF 1936.

PURSUANT to a petition, dated the 18th February 1936, filed by Ganga Prasad Doboy *alias* Baranashi, of Kundu Lane, Belgachia, 24-Parganas, debtor, and on the application of the debtor himself and on reading his application and hearing his pleader, it is ordered that the debtor be and the said debtor is hereby adjudged insolvent.

It is further ordered that the debtor do apply for his discharge within 5th March 1937.

Dated this 2nd day of June 1936.

P. N. CHAUDHURI, Sub-Judge.
(1273—1)

ORDER OF ADJUDICATION.

Section 27 of the Provincial Insolvency Act, V of 1920.

In the 4th Court of the Sub-Judge at Alipore.

INSOLVENCY APPLICATION No. 88 OF 1936.

PURSUANT to a petition, dated 24th February 1936, filed by Abdar Rahim Mea of Khardah, 24-Parganas, debtor, and on the application of the debtor himself and on reading his application and hearing his pleader, it is ordered that the debtor be and the said debtor is hereby adjudged insolvent.

It is further ordered that the debtor do apply for his discharge within 10th May 1937.

Dated this 2nd day of June 1936.

P. N. CHAUDHURI, Sub-Judge.
(1274—1)

ORDER OF ADJUDICATION.

Section 27 of the Provincial Insolvency Act, V of 1920.

In the 4th Court of the Sub-Judge at Alipore.

INSOLVENCY APPLICATION No. 89 OF 1936.

PURSUANT to a petition, dated 25th February 1936, filed by McIlwain of 146L, Kaiser Street, Sealdah, 24-Parganas, debtor, and on the application of the debtor himself and on reading his application and hearing his pleader, it is ordered that the debtor be and the said debtor is hereby adjudged insolvent.

It is further ordered that the debtor do apply for his discharge within 10th April 1937.

Dated this 10th day of June 1936.

P. N. CHAUDHURI, Sub-Judge.

(1275—1)

ORDER OF ADJUDICATION.

Section 27 of the Provincial Insolvency Act, V of 1920.

In the 4th Court of the Sub-Judge at Alipore.

INSOLVENCY APPLICATION No. 115 OF 1936.

PURSUANT to a petition, dated 24th February 1936, filed by Hormuj Ali Purkait of Bandipur, police-station Khardah, 24-Parganas, debtor, and on the application of the debtor himself and on reading his application and hearing his pleader, it is ordered that the debtor be and the said debtor is hereby adjudged insolvent.

It is further ordered that the debtor do apply for his discharge within 10th January 1937.

Dated this 8th day of June 1936.

P. N. CHAUDHURI, Sub-Judge.

(1276—1)

ORDER OF ADJUDICATION.

Section 27 of the Provincial Insolvency Act, V of 1920.

In the 4th Court of the Sub-Judge at Alipore.

INSOLVENCY APPLICATION No. 130 OF 1936.

PURSUANT to a petition, dated 19th March 1936, filed by Ramprosad Saha of 12-1, Jamnagar Road, police-station Beniapukur, 24-Parganas, debtor, and on the application of the debtor himself and on reading his application and hearing his pleader, it is ordered that the debtor be and the said debtor is hereby adjudged insolvent.

It is further ordered that the debtor do apply for his discharge within 5th April 1937.

Dated this 2nd day of June 1936.

P. N. CHAUDHURI, Sub-Judge.

(1277—1)

ORDER OF ADJUDICATION.

Section 27 of the Provincial Insolvency Act, V of 1920.

In the 4th Court of the Sub-Judge at Alipore.

INSOLVENCY APPLICATION No. 160 OF 1936.

PURSUANT to a petition, dated 8th April 1936, filed by Kali Charan Naskar of Nashkarpur, police-station Behala, 24-Parganas, debtor, and on the application of the debtor himself and on reading his application and hearing his pleader, it is ordered that the debtor be and the said debtor is hereby adjudged insolvent.

It is further ordered that the debtor do apply for his discharge within 10th January 1937.

Dated this 8th day of June 1936.

P. N. CHAUDHURI, Sub-Judge.

(1278—1)

ORDER OF ADJUDICATION.

Section 27 of the Provincial Insolvency Act, V of 1920.

In the 4th Court of the Sub-Judge at Alipore.

INSOLVENCY APPLICATION No. 163 OF 1936.

PURSUANT to a petition, dated 9th April 1936, filed by Nanilal Burman of Khardah, police-station Diamond Harbour, 24-Parganas, debtor, and on the application of the debtor himself and on reading his application and hearing his pleader, it is ordered that the debtor be and the said debtor is hereby adjudged insolvent.

It is further ordered that the debtor do apply for his discharge within 10th March 1937.

Dated this 8th day of June 1936.

P. N. CHAUDHURI, Sub-Judge.

(1279—1)

ORDER ANNULLING ADJUDICATION.

Section 43 of the Provincial Insolvency Act, V of 1920.

In the 4th Court of the Sub-Judge at Alipore.

INSOLVENCY APPLICATION No. 322 OF 1935.

Nacharaddi Mondal, applicant.

WHEREAS Nacharaddi Mondal of Garui, police-station Dum Dum, 24-Parganas, debtor, does neither appear nor apply for discharge within the specified time, it is ordered that the order of adjudication, dated 7th December 1935, against the debtor be and the same is hereby annulled.

Dated this 6th day of June 1936.

P. N. CHAUDHURI, Sub-Judge.

ORDER ANNULLING ADJUDICATION.

Section 43 of the Provincial Insolvency Act, V of 1920.

In the 4th Court of the Sub-Judge at Alipore.

INSOLVENCY APPLICATION No. 300 OF 1935.

Abdul Samad, applicant.

WHEREAS Abdul Samad of 1-1, Koyla Sarak Road, Ekbalpore, 24-Parganas, debtor, does neither appear nor apply for discharge within the specified time, it is ordered that the order of adjudication, dated 22nd November 1935, against the debtor be and the same is hereby annulled.

Dated this 6th day of June 1936.

P. N. CHAUDHURI, Sub-Judge.

ORDER ANNULLING ADJUDICATION.

Section 43 of the Provincial Insolvency Act, V of 1920.

In the 4th Court of the Sub-Judge at Alipore.

INSOLVENCY APPLICATION No. 254 OF 1935.

Dulin Chand Dutta, applicant.

WHEREAS Dulin Chand Dutta of 85, Ultadanga Main Road, police-station Manicktola, 24-Parganas, debtor, does not proceed with his application for discharge, it is ordered that the order of adjudication, dated 26th November 1935, against the creditors be and the same is hereby annulled.

Dated this 25th day of May 1936.

P. N. CHAUDHURI, Sub-Judge

ORDER ANNULLING ADJUDICATION.

Section 43 of the Provincial Insolvency Act, V of 1920.

In the 4th Court of the Sub-Judge at Alipore.

INSOLVENCY APPLICATION No. 383 OF 1935.

Abdul Khaleq, applicant.

WHEREAS Abdul Khaleq of Padirati, Metiaburuz, 24-Parganas, debtor, does neither appear nor apply for discharge within the specified time, it is ordered that the order of adjudication, dated 30th November 1935, against the debtor be and the same is hereby annulled.

Dated this 29th day of May 1936.

P. N. CHAUDHURI, Sub-Judge.

WANTED from the beginning of July 1936 a temporary Lecturer in Commercial Bengali for the Government Commercial Institute, Calcutta, on a salary of Rs. 130 per mensem. Candidates must be M. A.'s in Bengali with knowledge of Economics or Commerce and preferably with teaching experience.

2. Preference will be given to a Moslem if a suitable candidate is available.

3. Canvassing in any form, either direct or indirect, should be regarded as disqualification.

Applications must reach the Principal, Government Commercial Institute, Calcutta, on or before 3rd July 1936.

WANTED temporarily for three years a Second Maulvi on a fixed salary of Rs. 50 per month for the Jessore Zilla School.

Candidates must have passed at least the Fazil Examination of the Board of Central Madrasah Examination and the I.A. Examination of Calcutta University. A good knowledge of Persian is essential.

Preference will be given to those having experience in teaching and proficiency in Urdu.

Applications stating name, age, educational qualifications, teaching experience, father's name and address—village, post office, thana and district should reach the undersigned on or before 15th July 1936.

M. A. JAAFAR.

Inspector of Schools, Presidency Division.

Calcutta, the 27th June 1936.

Public Service Commission (India).

APPLICATIONS are invited for the post of Dental Surgeon, Punjab Dental Hospital, and Principal, deMontmorency College of Dentistry, Lahore. (2) Pay Rs. 800—40—1,000—50—1,250, *plus* overseas pay £15 per mensem during the first five years and £20 thereafter, if the selected candidate be of non-Asiatic domicile. (3) Age not below 30. (4) Candidates should possess a qualification in Dentistry registrable under the British Dental Act or other equally high qualification, should have undergone a special course of instruction in the theory and practice of Dental Surgery and should be able to produce evidence that they are capable of imparting instruction in the subject. (5) Candidates should be natural born British subjects. (6) Post permanent. Probation one year. Service terminable by three months' notice on either side during probationary period. (7) Government servants eligible if permitted to apply by their departments. (8) The appointing authority reserves the right to appoint a resident of the Punjab, if such a person is on the list of "candidates most suitable for appointment" submitted by the Public Service Commission. (9) Canvassing, in any form, will disqualify. (10) Last date for receipt of applications 21st July 1936. Prescribed application forms and further particulars may be obtained from the Secretary, Public Service Commission, Simla. Requests for forms must mention the name of the post.

Simla, the 16th June 1936.

(1241—1)

APPLICATIONS are invited for the post of Professor of Anatomy, Medical College, Calcutta. The appointment will be on contract for five years renewable at the end of each quinquennium. Private practice is not allowed. The selected candidate will be on probation for two years. Officers already in Bengal Medical Service are also permitted to apply for it.

The pay of Bengal Medical Service officers will be in the scale of Rs. 550—75/2—1,000 *plus* a non-practising allowance of Rs. 150 per mensem. For direct recruits from the Medical profession the pay will be in the scale of Rs. 650—50/2—750—75/2—1,200 *plus* a non-practising allowance of Rs. 150 per mensem. The initial pay in the scale will be the stage corresponding to the age on appointment as shown in the table below :—

Age 36 years and below	stage	1	Rs. 650
Age 37	,,	,, 2	Rs. 650
Age 38	,,	,, 3	Rs. 700
Age 39	,,	,, 4	Rs. 700
Age 40	,,	,, 5	Rs. 750
Age 41	,,	,, 6	Rs. 750

etc., etc., etc.

Candidates should be British subjects and must have high academic qualification with previous teaching experience in the subject. Contributory Provident Fund benefits will be allowed to non-service men, Government contributing an anna in the rupee of their pay.

Canvassing will disqualify.

Applications supported by evidence of the qualifications possessed and of age should reach the Surgeon-General with the Government of Bengal not later than 17th July 1936.

APPLICATIONS are invited for a temporary post of Shorthand Typist for a Special Officer in the office of the Director of Public Instruction, Bengal, on Rs. 80 per mensem, for a period of two months for the present, with prospects of longer duration. The candidate must have passed the I.A. or I.Sc. Examination of the Calcutta or Dacca University, or any examination of equivalent standard. A graduate Stenographer will be preferred. Candidates must have satisfactory speed in Shorthand and accurate knowledge of Typewriting. Their age and qualifications should be stated in their applications. Applications will be received by the Personal Assistant to the Director of Public Instruction, Bengal, Writers' Buildings, Calcutta, up to 7th July 1936.

BOARD OF REVENUE, BENGAL.

Wards Branch.

ORDER No. 7919W.

WHEREAS application has been made by Mumtaz Ahamed Chowdhury, son of the late Khan Sahib Moulavi Muzaffar Ahamed Chowdhury, of Chaufuldandi, in the district of Chittagong, praying that he may be declared to be a disqualified proprietor for the purpose of managing his estate and that it be brought under the management of the Court of Wards under clause (c) of section 6 of the Bengal Court of Wards Act, IX (B. C.) of 1879, as amended by the Bengal Decentralisation Act, 1915 (Bengal Act V of 1915), the Court of Wards is pleased to declare that the said Mumtaz Ahamed Chowdhury is a disqualified proprietor within the meaning of that section and that it is expedient in the public interest that his estate should be managed by the Court of Wards.

Under sections 7 and 35 of the said Act (Act IX B. C. of 1879), the Court of Wards also declares that it has determined to take under its charge the properties of the disqualified proprietor named above and it directs that possession be taken of such properties on behalf of the Court.

By order of the Court of Wards, Bengal,

S. BANERJEE, Secretary.

Calcutta, the 8th June 1936. (1287—1)

BOARD OF REVENUE, BENGAL.

Wards Branch.

ORDER No. 7920W.

UNDER section 27, Act IX (B. C.) of 1879, the Court of Wards hereby declares Sreemati Almach Khatun and Sreemati Dayera Bibi, widows of the late Khan Sahib Moulavi Muzaffar Ahamed Chowdhury, of Chaufuldandi, in the district of Chittagong, to be incompetent to manage their own properties under section 6 (*a*) of the Act.

Under section 35 of the said Act, the Court of Wards also declares that it has determined to take under its charge the properties of the females named above and it directs that possession be taken of such properties on behalf of the Court.

By order of the Court of Wards, Bengal,

S. BANERJEE, Secretary.

Calcutta, the 8th June 1936. (1288—1)

THE Bengal and Madras Service Family Pension Fund which is provisionally managed and assisted by Government has for its object the provision of monthly pensions for the maintenance of the widows and children of subscribers and is open, with certain exceptions, to all active and pensioned members of the Uncovenanted service of Government (except those serving under the Government of Bombay), and to Local Fund servants earning pensions from Government. Some of the special features of the fund are (1) that widowed daughters incapable of re-marriage or children labouring under such mental or bodily infirmities as incapacitate them from earning their livelihood or preclude the possibility of marriage (in case of a daughter) are admitted to its benefits; and (2) that subscribers to the Widows and Daughters' branches are entitled to a refund of 30 per cent. of the premia paid, should the nominee predecease them after five years of admission. The second quinquennial valuation of the Fund has been completed by the Actuary to the Government of India, and his report discloses very favourable results. For forms of application and rules of the Fund apply to the Accountant-General, Bengal, Imperial Secretariat Buildings, Calcutta.

Notice under section 40 of the Transfer of Property Act.

Re Garden-House, *viz.*, "Sasi-Villa" at 190, Gopal Lal Tagore Road, Barnagore.

(Division 1—Subdivision 4—Holding 35, 35A, 52D, 52F.)

KNOW all men concerned that Mr. D. N. Niyogi, owner of the above Garden-House, has entered into an agreement with my client Babu Fakir Chanda Ghosh for sale of the above Garden-House on 30th March 1936 last. Anybody in any way dealing with the said property in spite of the said agreement shall do so at his own risk and my client's right under the said agreement shall not be affected thereby.

BENI MADHAB CHATTERJEE,
Pleader,
District Bar Library, Alipore.

Alipore, the 30th June 1936. (1293—1)

IT is hereby notified for general information that the next ordinary examination of candidates for Certificates of Competency as Masters and Serangs of inland steam vessels under Act I of 1917, will be held at the Port Office, Chittagong, on Tuesdays, the 14th July, 11th August and 15th September 1936, at 10·30 a.m.

Applications for examination for any of the above grade certificates must be made at the Port Office, Chittagong, not later than three days prior to the date of examination, the candidates producing their certificates and testimonials and paying the fees.

F. W. ANGELL, Commander, R.I.N.,
Nautical Surveyor, Chittagong.

Chittagong, the 17th June 1936.

NOTICE is hereby given that the partnership subsisting between Lachminarain Lath, Bisseswarlal Lath and Badridas Murarka under the name and style of Lachminarain Company, at No. 149, Cotton Street, Calcutta, has been dissolved, and by consent Badridas Murarka has retired therefrom on and from Dewali Day, 1935. The said Lachminarain Lath and Bisseswarlal Lath shall now be deemed to have carried on the said businesses on their own account and they alone are entitled to and responsible for all transactions on and after that date. Badridas Murarka is not concerned with the same.

Dated this 20th day of June 1936.

P. D. HIMATSINGKA & Co., Solicitors for the Partners, 6, Old Post Office Street, Calcutta.

(1235—1)

Notice under section 10A of Act IX (B.C.) of 1879.

WHEREAS under sections 7 and 35 of the Court of Wards Act, IX (B.C.) of 1879, as amended up to date, the Court of Wards has assumed charge of the property of Babus Ram Prasad Sen and his brothers of mauza Radhaballabh situated in the district of Rangpur.

Notice is hereby given under section 10A of the said Act that all creditors having claims against the said estate of Babu Ram Prasad Sen and his brothers or his immoveable property are hereby required to submit the same in writing to the Collector of Rangpur within six months from the date of publication of this notice.

Creditors are hereby warned that claims not submitted, as required by the notice, are liable to be deemed to have been duly discharged.

H. C. SEN, Wards Deputy Collector.

Rangpur, the 17th June 1936. (1281—3)

Estate Mrs. Clara Agnes Elizabeth Davis, deceased.

PURSUANT to section 360 of Act XXXIX of 1925 and section 42 of Act XXVIII of 1866, the creditors and all persons interested in the estate of Clara Agnes Elizabeth Davis, late of 12, Craysfort Road, Boscombe, in the County of Hants, Hampshire, England, who died at that address on the 23rd day of November, 1935, and Letters of Administration to whose estate were granted by the High Court, Calcutta, on the 8th day of June, 1936, are hereby required to submit particulars of their claims to the undersigned on or before the 9th day of August, 1936, after which date the Administrator will distribute the assets, having regard only to the claims of which notice shall then have been received.

ORR, DIGNAM & CO.,
Solicitors to the Administrator.

32, Dalhousie Square, South, Calcutta, 26th June, 1936.

(1294—1)

Lost.

THE Government Promissory Notes Nos. 298328/30 of the 3½ per cent. loan of 1865 for Rs. 100 each, originally standing in the name of the Bank of Bengal and last endorsed to Sm. Mohor Kumari Dugor, the proprietress, by whom they were never endorsed to any other person, having been lost, notice is hereby given that payment of the above notes and the interest thereupon have been stopped at the Public Debt Office, Reserve Bank of India, Calcutta, and that application is about to be made for the issue of duplicates in favour of the proprietress. The public are cautioned against purchasing or otherwise dealing with the abovementioned securities.

Signature of the advertiser—Mohor Kumari Dugor.

Residence—C-o Gopichand Dugor, 39, Clive Street, Cal.

(1216—3)

In the matter of the Indian Companies Acts, 1913-20, and
In the matter of Advanx (Calcutta), Ltd. (in liquidation).

NOTICE is hereby given, pursuant to section 209 of the Indian Companies Act, 1913, that a meeting of the creditors of the abovenamed Company will be held at Chartered Bank Buildings, Calcutta, on Tuesday, the 21st day of July 1936, at 2 o'clock in the afternoon.

W. R. LEE EMERY, *for* Self and Co-Liquidators.

Calcutta, the 25th June 1936. (1292—1)

In the matter of the Indian Companies Acts, 1913-20,
and
In the matter of Advanx (Calcutta), Ltd. (in liquidation).

NOTICE is hereby given that at an extraordinary general meeting of the members of the abovenamed Company duly convened and held at Chartered Bank Buildings, in the town of Calcutta, on the 24th day of June 1936, the resolution below mentioned was passed as an extraordinary resolution :—

"That the Company cannot by reason of its liabilities continue to carry on its business and accordingly that the Company be wound up voluntarily and that Messrs. William Robert Lee Emery and James McPhail Ritchie, both of Chartered Bank Buildings, Calcutta, be and they are hereby appointed liquidators for the purposes of such winding up with joint and several powers."

W. R LEE EMERY, *for* Self and Co-Liquidators.

Calcutta, the 25th June 1936. (1291—1)

IN THE HIGH COURT OF JUDICATURE AT FORT WILLIAM IN BENGAL.

Ordinary Original Civil Jurisdiction.

In the matter of the Indian Companies Act, 1913,
and
In the matter of the Behar Sugar Mills, Ltd.

NOTICE is hereby given that a petition for the winding up of the above Company by the High Court of Judicature at Fort William in Bengal was on the 25th day of May 1936 presented in the said Court by Joychand Ganguly, a contributory of the said Company, and that the said petition is directed to be heard before the Court on the 20th day of July 1936, and any creditor or contributory of the said Company desirous of opposing an order for the winding up of the said Company under the above Act should appear at the time of hearing by himself or his attorney or advocate for that purpose ; and a copy of the petition will be furnished to any creditor or contributory of the said Company requiring the same by the undersigned, on payment of the prescribed charge for the same.

Dated the 22nd day of June 1936.

RAJKUMAR BASU, Attorney for the petitioner, Joychand Ganguly, No. 1B, Old Post Office Street, Calcutta.

Note.—Rule 41 provides that any person who intends to appear on the hearing of the said petition must serve on or send by post to the abovenamed, notice in writing of his intention so to do. The notice must state the name and address of the person, or, if a firm, the name and address of the firm, and must be served, or if posted, must be sent by post in sufficient time to reach the abovenamed not later than two clear days before the 20th day of July 1936.

(1290—1)

In the matter of the Indian Companies Act, VII of 1913,
and
In the matter of K. C. Bose and Co., Ltd. (in liquidation).

TAKE notice that a meeting of the contributories in the above matter will be held at my office at No. 6, Old Post Office Street, Calcutta, on Friday, the 14th August 1936, at 5 o'clock in the afternoon, to adopt the liquidator's final statement of account and to consider the complete winding up of the affairs of K. C. Bose & Co., Ltd. (in liquidation).

G. C. MITTER, Liquidator.

6, Old Post Office Street, Calcutta, the 24th June 1936.

(1289—1)

IN THE HIGH COURT OF JUDICATURE AT FORT WILLIAM IN BENGAL.

Ordinary Original Civil Jurisdiction.

In the matter of the Indian Companies Act, VII of 1913,
and
In the matter of the Bengal Flour Mills Company, Limited.

NOTICE is hereby given that in connection with the abovenamed Company's petition for an order confirming reduction of capital a list of the creditors of the abovenamed Company as at the 20th June 1936 has been filed in Court. Any person may upon payment of the sum of Re. 1 inspect a copy of such list during the usual hours of business either at the Registered Office of the abovenamed Company at No. 103, Clive Street, Calcutta, or at the office of the undersigned.

SANDERSONS & MORGANS, Attorneys for the Company abovenamed, 26, Dalhousie Square, Calcutta.

Dated 1st July 1936. (1351—1)

NOTICE.

Government of India.

ARMY DEPARTMENT.

THE services of pensioned and discharged Indian officers and soldiers required for employment in civil capacities may be obtained on application to—

(i) The Recruiting Officers of the class required at the following stations—

(*a*) Mussalmans—
Peshawar for Pathans ; Rawalpindi, Lahore and Jullundur for Punjabi Mussalmans ; Ajmer for Rajputana Mussalmans and Poona for Dekhan Mussalmans.

(*b*) Hindus, etc.—
Lahore and Jullundur for Sikhs and Dogras ; Delhi for Brahmans, Rajputs, Jats, Gujars and Ahirs ; Ajmer for Rajputana Hindus (*i.e.*, Rajputs, Jats etc.) ; Poona for Mahrattas and Maymyo for Burma classes.

(ii) The Pension Paymaster, Madras, for Madrasis.

(iii) The Assistant Military Secretary (Personal) to His Excellency the Commander-in-Chief (Army Headquarters), for pensioned Indian officers of all classes required for employment as passenger superintendents on Indian Railways.

All applications from employers should include the particulars shown below and should be addressed to the officers referred to at the places abovementioned :—

(1) Name of person or firm offering employment.
(2) Nature of employment and place at which it is offered.
(3) Proposed pay and period for which employment is offered.
(4) Whether railway fare to place of employment will be paid or not.
(5) Whether return railway fare will be paid in case of a pensioner being discharged for no fault of his own, or after a definite period of service.
(6) Class of men required, *e.g.*, Sikh, Pathan, Dogra, etc.

F. G. MOORE, Lieut.-Colonel,
Assistant Secretary to the Government of India.

INDIAN LAW REPORTS.

CALCUTTA SERIES of Indian Law Reports from 1876 onwards are available in the Publication Branch, Bengal Government Press, Alipore, Bengal. Enquiries for these may be made to Superintendent, Government Printing, at the above address. Monthly parts from 1930 onwards are available also at the Sales Department, Writers' Buildings, Calcutta—

PRICES.

From 1876 to 1934.

Complete yearly volume Rs. 12 { (postage Rs. 3 Inland). (,, Rs. 4 Foreign).

From 1930 onwards.

Monthly parts only Rs. 2 { (postage As. 2 Inland). (,, As. 3 Foreign).

Enquiries for series other than Calcutta must be made to the publishers concerned.

C. R. BATTERSBY,
Supdt., Govt. Printing, Bengal.

Alipore, the 6th December 1934.

Descriptive Catalogue of Sanskrit Manuscripts.

PARTS I, II and III of a Descriptive Catalogue of the Sanskrit Manuscripts in the Library of the Calcutta Sanskrit College, prepared by Pandit Hrishikesh Sastri and Babu Siva Chandra Gui, M.A., B.L., of that College, are offered to the public for sale. The Catalogue having to be completed in 23 parts the price of each part is 12 annas a copy exclusive of postage. Copies can be obtained from the Principal of the Sanskrit College, Calcutta.

Imperial Library.

Secretariat Buildings, 6, Esplanade East, Calcutta.

Open on—

Week days and Saturdays from 10 a.m. to 7 p.m.
Sundays and Gazetted holidays from 2 p.m. to 5 p.m.

THE Imperial Library is also a Lending Library. It is free to all except children. There is no subscription to pay.

K. M. ASADULLAH, Librarian.

CINCHONA FACTORY PRODUCTS.

By order of the Government of Bengal Cinchona Factory Products as manufactured and packed at the Cinchona Factory, Mungpoo, Darjeeling district, will be sold and distributed by the Superintendent of the **Presidency Jail**, *in original packages* as received from the Mungpoo Factory, at the rates herein noted **from the 1st May 1926** :—

Name of drug	Price per lb. in powder form. Taken at a time. For 60 lbs. and upwards.	For 6 lbs. and over but less than 60 lbs.	For any quantity less than 6 lbs.	Price in 5 grain tablets. 1,000 tablets.	500 tablets.	250 tablets.	Price by weight per lb.
	Rs.	Rs.	Rs.	Rs.	Rs. a.	Rs. a.	Rs.
Quinine Bisulphate ..	18	19	20	16	8 0	4 4	..
„ Hydrobromide ..	23	24	25	20	10 0	5 4	..
„ Bihydrobromide ..	26	27	28	23	11 8	6 0	..
„ Salicylate ..	24	25	26	..	..	..	..
„ Tannate ..30 per cent. 35 per cent.	14	15	16	..	..	..	14

N.B.—Packing free in tins, sizes 1 lb., 8 oz. and 4 oz. only. Packing in bottles or smaller sizes of tins extra.

Quinine Sulphate.

For 60 lbs. and upwards at a time .. Rs. 18 per lb.
For 6 lbs. and over but less than 60 lbs. at a time .. .. .. „ 19 „
For any quantity less than 6 lbs. .. „ 20 „

Totaquina.

Irrespective of quantity .. Rs. 13-8 per lb.

For sale to hospitals and dispensaries in Bengal, Bihar, Orissa and Assam.

Quinine Hydrochloride.

For 60 lbs. and upwards at a time .. Rs. 23 per lb.
For 6 lbs. and over but less than 60 lbs. at a time .. .. .. „ 24 „
For any quantity less than 6 lbs. .. „ 25 „

Quinine Di-Hydrochloride.

For 60 lbs. and upwards at a time .. Rs. 25 per lb.
For 6 lbs. and over but less than 60 lbs. at a time .. .. .. „ 26 „
For any quantity less than 6 lbs. .. „ 27 „

Quinidine Sulphate.

For 60 lbs. and upwards at a time .. Rs. 20 per lb.
For 6 lbs. and over but less than 60 lbs. at a time .. .. .. „ 21 „
For any quantity less than 6 lbs. .. „ 22 „

Cinchonidine Sulphate.

For 60 lbs. and upwards at a time .. Rs. 25 per lb.
For 6 lbs. and over but less than 60 lbs. at a time .. .. .. „ 26 „
For any quantity less than 6 lbs. .. „ 27 „

Cinchonine Sulphate.

For 60 lbs. and upwards at a time .. Rs. 12 per lb.
For 6 lbs. and over but less than 60 lbs. at a time .. .. .. „ 13 „
For any quantity less than 6 lbs. .. „ 14 „

*Cinchona Febrifuge (Powder).

For 60 lbs. and upwards at a time .. Rs. 9 per lb.
For 6 lbs. and over but less than 60 lbs. at a time .. .. .. „ 9 „
For any quantity less than 6 lbs. .. „ 10 „

*Cinchona Febrifuge (Tablets).

For 60 lbs. and upwards at a time .. Rs. 10 per lb.
For 6 lbs. and over but less than 60 lbs. at a time .. .. .. „ 10 „
For any quantity less than 6 lbs. .. „ 11 „

Supply of Cinchona Febrifuge to all authorised indentors will be rationed in the proportion of 1½ of Cinchona Febrifuge to 1 of Quinine Sulphate at their existing prescribed prices.

Cinchona Bark (in 50 pound original bags).

Per bag — — .. Rs. 25.

4 grains Quinine Tablets.

Rs. a.
2 8 per box of 200 tablets (for Bengal and other provinces).
12 1 per 5 boxes—(Transit charges inclusive) for Public in Bengal.
15 8 per lb.

5 grains Quinine Tablets.

Rs. a.
15 8 per lb. sold in 1 lb., ½ lb. and ¼ lb. tins.

5 grains Quinine Hydrochloride Tablets.

Rs. a.
20 0 per 1,000 tablets.
10 0 „ 500 „
5 4 „ 250 „

Packing free in tins, sizes 1 lb., 8 oz. and 4 oz. only. Packing in bottles or smaller sizes in tins extra.

5 grains Quinine Bihydrochloride Tablets.

Rs. a.
22 0 per 1,000 tablets.
11 0 „ 500 „
6 0 „ 250 „

Packing free in tins, sizes 1 lb., 8 oz. and 4 oz. only. Packing in bottles or smaller sizes in tins extra.

Transit charges extra in every case.

***Cinchona Febrifuge** is for sale to Government and Charitable Institutions, Local Bodies and Missionaries only. **It is not for sale to Private Firms or the General Public.**

Quinine Sulphate is now open for sale to the Public at the above rates. But it will be supplied to Hospitals and Dispensaries in Bengal, Bihar, Orissa and Assam at Rs. 18 per pound irrespective of quantities.

Five and ten boxes of Quinine Tablets are sold to the public at the concession rates which will be intimated on application.

Provinces other than Bengal, Bihar, Orissa and Assam will get their supplies of Sulph. Quinine and Cinchona Febrifuge Powder and Tablets from the Director, Botanical Survey of India, Sibpur, Howrah.

Local sale at the jail gate from 10 to 12 noon.

The system of payment is by—*Cash in advance*—by "*Treasury Challans*," which should accompany the order or indent.

In cases where this is not possible, payment should be made by "*Remittance Transfer Receipts*" or crossed "*Cheques*."

Indents unaccompanied by cash in advance will be sent Value Payable Post. Credit sale is not allowed except under special circumstances.

In the case of *Government officers* payments will be recovered by *Book Transfer*, i.e., *Countersigned Invoices*, in the event of *Cash* not accompanying the indent by "*Treasury Challans*," *Remittance Transfer Receipt or Cheque.*

2. Price and postage must accompany the price of the drug (when the drug is required by post).

The name of the Railway and Steamer Station or Post Office must be written distinctly when the parcels are required by Rail, Steamer or by Post. Railway parcels are sent by passenger train only.

A scale of postage is given below.

	1 oz.	2 ozs.	4 ozs.	½ lb.	¾ lb.	1 lb.
	As.	As.	As.	As.	As.	Rs. A.
Quinine Sulph. ..	..	..	7	7	11	0 11
Cinchona Feb. ..	..	..	7	7	11	0 11
Cinchona Feb. Tablets	..	..	7	7	11	0 11
Quinine Hydrochlor. ..	5	5	7	7	..	0 11
Quinine Di-hydrochlor.	5	5	7	7	..	0 11
Quinine Tablets ..	..	..	7	7	11	0 11
Totaquina ..	..	..	7	7	11	0 11

	1¼ lb.	2 lb.	3 lb.	4 lb.	5 lb.	6 lb.
	Rs. A.	Rs. A.	Rs. A.	Rs. A.	Rs. A.	Rs. A.
Quinine Sulph. ..	0 15	1 3	1 7	1 15	2 7	2 15
Cinchona Feb. ..	0 15	0 15	1 7	1 11	1 15	2 7
Cinchona Feb. Tablets	1 3	1 3	1 11	1 15	2 7	2 15
Quinine Hydrochlor. ..	1 1	0 15	1 7	1 11	..	..
Quinine Di-hydrochlor.	1 1	0 15	1 13	2 5	..	..
Quinine Tablets ..	0 15	0 14	1 7	1 11	1 15	2 3
Totaquina ..	0 15	1 3	1 7	1 15	2 7	2 15

Two different drugs are not packed in the same parcel and postage must be paid separately for each kind.

N.B.—Postage stamps are not accepted as revenue.

Government reserve the right to alter the price without notice.

Selected Publications from general stock in Publication Branch.

Political Department.

Memoirs of Gaur and Pandua, 1931. Rs. 5 (7¾a.).

Sannyasi and Fakir Raiders in Bengal, 1930. Re. 1-8 (6¼a.).

Judicial Department.

Rules and Forms under the Bengal Money Lenders Act, 1933. A. 1 (9p.).

Rules under the Indian Bar Councils Act, 1926. As. 5 (1¼a.).

Chronological Tables, 1934. A. 1. (9p.).

Manual of Practical Instructions for the conduct of Civil cases. As. 10 (3¼a.).

High Court's Civil Rules and Orders, Vol. I. Re. 1-10 (12¼a.).

High Court's Civil Rules and Orders, Vol. II. Re. 1-4 (9¼a.).

Report on the Administration of Civil Justice in Bengal, 1934. As. 15 (3¼a.).

Report on the Administration of Criminal Justice in Bengal, 1934. As. 4 (1¼a.).

Report on the Administration of Civil Justice in Assam, 1934. As. 7 (1¼a.).

Report on the Administration of Criminal Justice in Assam, 1934. As. 5 (1¼a.).

Political (Jails) Department.

Administration Report of Jails in Bengal, 1925, Rs. 4 (4a.), **1926,** Rs. 4 (3¼a.), **1928,** Rs. 13-2 (3¼a.), **1929,** Rs. 2-12 (2¾a.), **1930,** Rs. 3-5 (2¾a.), **1931,** Rs. 2-8 (2¼a.) **1933,** As. 12 (2¼a.).

Bengal Jail Code, Vol. I. Rs. 3-8 (11a.).

Bengal Jail Code, Vol. II. Rs. 4-8 (12a.).

Administration Report of Jails in Bengal, 1934. As. 12 (3a.).

Appointment Department.

Half-yearly Civil List for Bengal, corrected up to 1st July 1935. Rs. 3 (14a.).

Recruitment Rules for Provincial Services, 1930. As. 6 (1¼a.).

Report on the working of the Reforms Constitution in Bengal, 1921-27. Rs. 3 (7¼a.).

Question papers of the Bengal Provincial Services Examination of various years, 1934. Re. 1 (2¼a.).

Form of Return of Election expenses, 1929. As. 3 (9a.).

Bengal Electoral Rules and Regulations, corrected up to 15th December 1926. Re. 1 (2¼a.).

Legislative Assembly Electoral Rules and Regulations, corrected up to the end of July 1934. As. 12 (2¼a.).

Council of State Electoral Rules and Regulations, corrected up to 30th March 1930. As. 15 (1¼a.).

Police Department.

Bengal Chaukidary Manual, 1923. Re. 1-4 (6¼a.).

Motorists Handbook, 1934. As. 4 (1¼a.).

Bengal Presidency Motor Vehicles Rules, 1935. As. 8 (3¼a.).

Calcutta and Howrah Motor Vehicles Rules, corrected up to 1st January 1933. As. 4 (2¼a.).

Safety first hints issued by the Calcutta Police, 1931. (In English, Hindi and Bengali). A. 1 (9p.) each.

Police Traffic Signal, 1926. As. 6 (1a.).

Rules for the Regulations of Traffic in Calcutta and suburbs, 1931. As. 10 (2¼a.).

Bengal Arms Act Manual, 1924, as modified up to June 1933. As. 14 (7¾a.).

The Poisons Act and Rules, 1934. As. 4 (1¼a.).

Commerce Department.

Bengal Factories Rules, 1935. As. 8 (1¼a.).

Bengal Boilers Rules, 1928. As. 4 (9p.).

Rules under section 30 of the Indian Mines Act, 1923. As. 3 (9p.).

Rules under section 33 of the Workmen's Compensation Act, 1923. A. 1 (9p.).

Bengal Trade Union Regulations, 1927. As. 2 (9p.).

Bengal Trade Dispute Rules, 1930. As. 3 (9p.).

Bengal Partnership Rules, 1933. A. 1 (9p.).

Rules framed under section 9 of the Indian Petroleum Act, 1899, to regulate the importation, possession and transport of Petroleum in the Presidency of Bengal, 1933. As. 4 (2¾a.).

Rules framed by the Government of Bengal under the Indian Petroleum Act for Carbide of Calcium, 1922. As. 8 (1¼a.).

Rules under section 24 of the Provident Insurance Societies Act, 1912. Published 1933. As. 2 (1¼a.).

Bengal Electricity Duty Rules, 1935. A. 1 (9p.).

Rules for the Levy of Fees for the Services of Electric Inspectors, 1935. A. 1 (9p.).

Regulations under Rule 40A of the Indian Electricity Rules, 1922. Published 1936. As. 4 (9p.).

Marine Department.

Manual of Regulations relating to the Examination of First and Second Class Masters and Serangs of Inland Steam Vessels, 1931. Rs. 2 (4a.).

Regulations relating to the Examination of Engineers and Engine-drivers of Inland Steam and Motor Vessels, 1931. Re. 1 (1¼a.).

Bengal Legislative Council Department.

Proceedings of the Bengal Legislative Council.

For the meetings held on the 14th to 16th, 19th, 20th, 22nd, 23rd and 26th to 28th August 1935, Vol. XLVI, No. 2. Re. 1-11 (10¼a.).

Revenue Department.

Census of India, Bengal, Vol. V, Part I, 1921. Rs. 8 (Re. 1-0-6p.).

Census of India, Bengal, Vol. V, Part II, 1921. Rs. 13 (Re. 1-0-6p.).

Census of Calcutta, Vol. VI, Part I, 1921. Rs. 5 (6¼a.).

Census of Calcutta, Vol. VI, Part II, 1921. Rs. 7-8 (8¼a.).

Report on the Administration of Bengal, 1929-30, Rs. 4-12 (6¼a.).

Report on the Administration of Bengal, 1930-31, Rs. 5-14 (6a.).

Report on the Administration of Bengal, 1933-34. Re. 1-8 (7¼a.).

Bengal District Gazetteers—

"A" Volumes :—

"Bakarganj." Rs. 3 (7¼a.).
"Birbhum." Rs. 2-8 (6a.).
"Dacca." Rs. 3 (6¼a.).
"Dinajpur." Rs. 3 (6a.).
"Faridpur." Rs. 5-8 (4¾a.).
"Hooghly." Rs. 3 (10¼a.).
"Howrah." Rs. 3 (7¼a.).
"Noakhali." Rs. 3 (5¼a.).
"Rajshahi." Rs. 3 (7¾a.).
"Jalpaiguri." Rs. 3 (6¼a.).
"Jessore." Rs. 3 (7¼a.).
"Khulna." Rs. 3 (8¼a.).
"Malda." Rs. 3 (5¼a.).
"Murshidabad." Rs. 3 (7¼a.).
"Nadia." Rs. 3 (7¼a.).
"Pabna." Rs. 4 (6¾a.).
"24-Parganas." Rs. 3 (8¼a.).

"B" Volumes—27 districts. Re. 1 (2¼a.) each district.

Annual Progress Report on Forest Administration in Bengal :—

1923-24. Rs. 4 (2¾a.).
1924-25. Rs. 2-10 (2¾a.).
1926-27. Rs. 4 (2¾a.).
1927-28. Rs. 8-1 (2¾a.).
1928-29. Rs. 10 (4a.).
1930-31. Rs. 4-8 (4a.).
1931-32. Re. 1-13 (4a.).
1932-33. Re. 1-9 (3¼a.).
1933-34. Rs. 2-2 (4a.).
1934-35. Re. 1 (3¼a.).

Annual Report of Government Cinchona Plantations and Factories in Bengal :—

1916-17. As. 5 (1a.).
1917-18. As. 5 (1a.).
1918-19. As. 6 (1½a.).
1919-20. As. 6 (1½a.).
1921-22. As. 8 (1½a.).
1922-23. As. 9 (1½a.).
1923-24. As. 7 (1½a.).
1925-26. As. 14 (1a.).
1926-27. As. 13 (1½a.).
1927-28. As. 13 (1a.).
1928-29. Re. 1-4 (1½a.).
1929-30. As. 9 (1a.).
1931-32. As. 12 (1½a.).
1932-33. As. 4 (1½a.).

Rules under the Tenancy Act, 1932. As. 6 (2¾a.).

Terms and conditions on which application under section 158A of the Bengal Tenancy Act may be allowed by Government, 1935. A. 1 (9p.).

Executive Instructions regarding transmission of landlords' fee under the Bengal Tenancy Act, 1931. As. 4 (9p.).

Notes on the amendments of the Bengal Tenancy Act, 1885, made by the amending Acts IV of 1920 and II of 1930 by Rai M. N. Gupta Bahadur, M.A., B.L. As. 10 (2¾a.).

A Revenue History of the Sundarbans from 1765 to 1870 by F. E. Pargiter, B.A. Re. 1-12 (8¼a.).

Local Self-Government Department.

Local Self-Government Account Rules for District Boards in Bengal, corrected up to June 1932. Rs. 3-7 (2¾a.).

Rules for the appointment of District Engineers, etc., Part IX rules, corrected up to December 1932. As. 4 (9p.).

Rules (Election) under the Local Self-Government Act, corrected up to June 1935. A. 1 (9p.).

Motor Vehicles Tax Rules, 1933. As. 2 (9p.).

Provisions of the Calcutta Municipal Act as extended to the Municipality of Howrah, 1932. Re. 1-7 (6a.).

Union Board Manual, Vol. I. 1928. As. 8 (4a.).

Union Board Manual, Vol. I. 1928 (in Bengali). As. 8 (4a.).

List of Union Boards in Bengal, 2nd Edition. Printed in 1934. As. 7 (2¾a.).

Local Self-Government (Medical).

Rules for the grant of certificate to compounders, 1928. A. 1 (9p.).

Rules for the management of the Government Medical Schools in Bengal, 1935. A. 1 (1¼a.).

Manual of Rules for the management of Hospitals and Dispensaries under the supervision of the Government of Bengal, corrected up to March 1926. As. 8 (2¾a.).

List of Hospitals, Dispensaries and other Medical Institutions in Bengal, corrected up to 31st December 1933. Re. 1-2 (3¼a.).

The Annual Report on Hospitals and Dispensaries in Bengal, 1933. Rs. 2 (4¾a.).

The Triennial Report on Hospitals and Dispensaries in Bengal, 1929-31. Rs. 2 (5¼a.).

The Annual Report on the Medical Schools in Bengal, 1933-34. Re. 1 (2¾a.).

The Annual Report on the Chemical Examiner's Department, Bengal, 1934. As. 8 (1a.).

The Annual Report on the Medical College, Calcutta, 1933-34. As. 8 (1¼a.).

The Pharmacopoea of the Medical College Hospitals, Calcutta, 1935. As. 12 (2¼a.).

The Pharmacopoea of the Presidency General Hospital, Calcutta, 1934. Re. 1 (2¼a.).

Local Self-Government (Public Health).

Annual Public Health Report, 1933. Re. 1 (6a.).

Annual Report of the Chief Engineer, Public Health Department, Bengal, 1934. As. 8 (1¼a.).

Education Department.

List of High Schools and Colleges in Bengal, corrected up to 31st December 1934. As. 2 (1¼a.).

Report on Public Instruction in Bengal, 1933-34. As. 5 (2¾a.).

Irrigation Department.

Classified list and distribution return of establishment, corrected up to 1st July 1935. As. 13 (1¼a.).

Revenue and Administration Report for the year 1933-34. Rs. 3-3 (4¼a.).

Agriculture Department.

Publications of general interest.

Annual Report of the Department of Agriculture in Bengal, 1933-34. Part I—As. 8 (1¼a.), Part II—Re. 1-4 (6a.).

Agricultural Statistics of Bengal, 1933-34. As. 6 (1¼a.).

Season and Crop Report of Bengal, 1934-35. As. 5 (1¼a.).

Report on the Cattle Census of Bengal, 1930. Rs. 3-10 (2¼a.).

Publications of special interest.

Report on the Bengal Jute Enquiry Committee, 1934, Vol. II. Rs. 3 (11a.).

Veterinary Department.

Publications of general interest.

Annual Report of the Veterinary Department, 1933-34. As. 4 (1¼a.).

Royal Botanic Garden.

Publications of general interest.

Annual Report of the Royal Botanic Garden, Government Garden, Calcutta, and Lloyd Botanic Garden, Darjeeling, 1934-35. As. 2 (9p.).

Publications of special interest.

Trees of Northern Bengal by Dr. J. M. Cowan and A. M. Cowan, B.A. Re. 1-12 (4a.).

Director of Industries, Bengal.

Publications of general interest.

Annual Report of the Department of Industries, Bengal, 1933-34. As. 10 (2¼a.).

Report on the Survey of Cottage Industries in Bengal, 2nd edition. Re. 1-12 (3¼a.).

Publications of special interest.

Composition and Detergency of Washing Soaps specially of the Grained Type. As. 2 (9p.). (Bulletin No. 61).

Manufacture of Shellac. As. 14 (1¼a.). (Bulletin No. 38).

Possibilities of manufacture of furniture and other articles of sheet steel as a small scale cottage or bazar industry. As. 12 (1¼a.). (Bulletin No. 57).

Conch Shell Industry in Bengal. As. 12 (1a.) (Bulletin No. 24).

Rice Mill Industry in Bengal. As. 8 (1a.). (Bulletin No. 33).

Commissioner of Excise and Salt, Bengal.

Publications of general interest.

Excise Administration Report for 1933-34. Re. 1-2 (2¼a.).

Bengal Secretariat Record Room.

Bengal Historical Records (already published), Edited by the Ven. W. K. Firminger, D.D., Litt.B., Late Archdeacon of Calcutta. Re. 1 (4a.).

Proceedings of the Controlling Council of Revenue at Murshidabad, Vol. V, 1st April to 15th July 1771. Price Rs. 11-8 (12¼a.).

Letter Copy Book of the Supervisor of Rajshahi at Nator (Letter issued), 30th December 1769 to 15th September 1772. Price Rs. 5-8 (2¼a.).

Proceedings of the Committee of Circuit at Krishnagar and Kasimbazar, Vols. I, II and III, 10th June to 17th September 1772. Price Rs. 19 (1 1a.).

Proceedings of the Committee of Circuit at Dacca, Vol. IV, 3rd October to 28th November 1772. Price Rs. 15-8 (9a.).

Proceedings of the Committee of Circuit at Rangpur, Dinajpur, Purnea and Rajmahal, Vols. V, VI, VII and VIII, 16th December 1772 to 18th February 1773. Price Rs. 17-8 (9¼a.) or £1 7*s.* 6*d.*

Bengal District Records, Edited by the Ven. W. K. Firminger, D.D., B.Litt., Late Archdeacon of Calcutta.

Midnapore, Vol. I, 1763-7. Price Rs. 3 or 4*s.* (11a.).

Midnapore, Vol. II, 1768-70. Price Rs. 3 or 4*s.* (10a.).

Rangpur, Vol. I, 1770-9. Price Rs. 3 or 4*s.* (10a.).

Dinajpur, Vol. I, 1787-9. Price Rs. 3 or 4*s.* (Re. 1-1¼a.).

Rangpur, Vol. I, 1770, 1777-79. Price As. 12 (1a.) (supplement).

Rangpur, Vol. V, 1786-87. Price Rs. 32-8 (11¼a.) or £2 10*s.* (receipts).

Rangpur, Vol. VI, 1786-87. Price Rs. 43 (10¼a.) or £3 6*s.* (issues).

Midnapore, Vol. IV, 1770-74. Price Rs. 20-9 (7¼a.) or £1 11*s.* 6*d.* (issues).

PRESS LISTS, SERIES I.

Supreme Revenue authorities.

Supplementary Volume.

Bengal Secretariat Record Room 1771-1775. Price, As. 9 (1¼a.).

SERIES II.

Intermediate Revenue authorities.

Volume III, Part I.

Proceedings of the Calcutta Committee of Revenue, 6th December 1773 to 28th December 1775. Price Rs. 2 (7¼a.) or 3*s.* 6*d.*

SELECT INDEXES.

Select Index to the General Letters.

Volume I.

Select Index to General Letters to and from the Court of Directors in the Revenue, Territorial Revenue, Territorial Financial and Miscellaneous Revenue Departments of the Government of Bengal, 1771-1858. Price Rs. 17-4 (6¼a.) or £1 7*s.* 3*d.*

Volume II.

Select Index to General Letters to and from the Court of Directors in the Separate Revenue, Commercial, Financial and Territorial Financial Departments of the Government of Bengal, 1765-1854. Price Rs. 7-8 (3¼a.) or 12*s.*

Volume III.

Select Index to General Letters to the Court of Directors for 1793-1858 and from the Court of Directors for 1827-1829 in the Judicial Department of the Government of Bengal. Price Rs. 10 (5¼a.) or 16*s.* 6*d.*

Volume IV.

Select Index to General Letters to and from the Court of Directors in the Public or General, Ecclesiastical, Public Works, Railway, Public Works, Revenue, Legislative and Financial Departments of the Government of Bengal, 1834-1856. Price Rs. 9 (4¼a.) or 15*s.*

PUBLICATIONS of the Bengal Government are available for sale to the public at Bengal Government Press, Alipore, and Sales Office, ground floor, Writers' Buildings, Calcutta.

Advertisements for Calcutta Gazette, Civil List, Indian Law Reports (Calcutta Series) are accepted at both offices.

Catalogues free on application.

Registered No. C207

No. 27 of 1936

The Calcutta Gazette

THURSDAY, JULY 2, 1936.

CONTENTS:

	Page.		Page.
Statement showing gifts made by private individuals in the districts of the Chittagong Division during the year 1935-36 ..	903	Prices-current (wholesale and retail) of Food-grains, Salt, etc., in the districts of Bengal for the first half of June 1936 ..	927—930
Daily Rainfall recorded in Bengal for the month of May 1936	904—919	Statement under the Cotton Ginning and Pressing Factories Act, 1925 .	931
Statement of weekly gauge-readings on certain rivers in Bengal	920 921	Finance Statements of Provincial and Central Co-operative Banks in the Presidency of Bengal for the quarter ending 31st March 1936	931—955
Vital Statistics of towns of Bengal for the week ending 20th June 1936 ..	922	Corporation of Calcutta Notice ..	956
Weather and Crop Report for the week ending 24th June 1936	923—926	Calcutta Improvement Trust Notice ..	956

SUPPLEMENT.

Official Papers.

Statement showing gifts of over Rs. 1,000 and up to Rs. 5,000 in value made by private individuals for the construction of works of public utility in the districts of the Chittagong Division during the year 1935-36.

Division.	District.	Name of donor.	Purpose.	Amount.	Total of district.	Total of division.
				Rs.	Rs.	Rs.
Chittagong ..	Chittagong ..	1. Rai Tajendra Lal Ghosh, village Chikdair, post office Annapurnabari, police-station Rauzan.	Chittagong General Hospital ..	5,000		
		2. Babu Dinabandhu Ghosh of Kanchana, police-station Satkania.	Construction of a hostel for Hindu and Muhammadan students of the Kanchana H. E. School.	3,000	13,000	
		3. Maulvi Minnat Ali Dobash, President, Barasat union board, police-station Anwara.	Improvement of the Zenana Hospital, Chittagong.	5,000		17,750
	Tippera ..	1. Babu Kamini Kumar Chakraborty of Baghaura, post office Baghaura, police-station Nabinagar.	Construction of the Inter-School Sports ground, Brahmanbaria.	3,250	4,750	
		2. Maulvi Syed Abdur Rashid Chaudhury, zemindar, Rupsa, post office Rupsa, police-station Faridganj.	Repairs of the mosque at Rupsa	1,500		

S. F. MEERZA, *Personal Assistant*, for *Commissioner*.

DAILY RAINFALL RECORDED IN BENGAL

Note—The total and the average rainfall for all districts have been

Division and district.	Station.	1	2	3	4	5	6	7
Presidency.								
24-Parganas ..	Saugar Island (Obsy.) ..	..	..	..	0·74	..	..	..
	Diamond Harbour ..	..	..	..	0·38	..	..	..
	Budge-Budge ..	..	..	..	0·50	..	0·09	..
	Canning Town ..	..	..	..	..	..	..	..
	Alipore (Obsy.) ..	..	..	..	0·25	..	0·07	..
	Barrackpore ..	..	..	0·78	..	0·65	0·48	..
	Dum Dum ..	..	..	..	..	..	..	1·12
	Baraset ..	..	..	..	..	..	0·75	..
	Basirhat ..	..	..	..	..	..	1·07	..
	Gosaba ..	..	..	..	..	0·23	..	1·02
Nadia ..	Ranaghat ..	..	..	..	..	..	..	..
	Krishnagar (Obsy.) ..	..	0·07	0·35	..	..	..	..
	Chuadanga ..	..	0·25	..	..	0·01	0·35	..
	Meherpur ..	..	0·07	..	..	0·06	..	0·10
	Kushtia ..	..	0·40	0·32	..	..	..	..
	Haringhata ..	..	..	..	..	..	0·38	..
Murshidabad ..	Kandi ..	..	1·14	..	..	0·31	..	..
	Berhampur (Obsy.) ..	..	..	..	..	0·27	0·56	..
	Lalbagh ..	..	..	2·27	..	0·21	..	..
	Azimganj ..	..	1·28	1·00	0·02	..	..	..
	Jangipur ..	..	..	0·62	..	..	0·84	..
	Lalgola ..	..	..	0·45	..	..	0·07	0·07
	Akriganj ..	..	..	0·58	..	..	..	0·35
	Patkabari ..	..	0·60	..	..	..	..	..
	Dumkal ..	..	..	1·05	..	..	..	..
	Kallyanganj (Ishanpur) ..	..	..	2·92	..	0·50	0·30	..
	Khargram ..	..	..	2·74	..	0·06	0·43	..
	Bharatpur ..	..	..	0·80	..	..	0·26	..
Jessore ..	Narail ..	..	..	..	..	..	..	1·30
	Jessore (Obsy.) ..	..	..	..	..	..	..	..
	Jhenida ..	..	0·04	..	..	..	..	0·70
	Magura ..	..	..	..	..	..	..	1·96
	Bongaon ..	..	..	..	..	..	..	..
Khulna ..	Satkhira (Obsy.) ..	..	..	..	..	..	0·24	..
	Bagerhat ..	..	..	..	..	..	..	..
	Khulna (Obsy.) ..	..	..	..	..	..	..	..
	Kaliganj ..	..	..	..	..	..	0·50	..
	Nakipur ..	..	..	..	..	..	..	..
	Dumuria ..	..	..	..	..	..	..	..
	Rampal ..	..	..	..	..	..	..	..
	Kalaroa ..	..	..	..	..	0·03	..	2·13
	Paikgachha (Raruli) ..	..	..	..	..	..	..	3·25
	Mollahat ..	..	..	..	..	..	..	2·54
	Morelganj ..	..	..	..	..	..	2·25	..
	Islamkati ..	..	..	..	..	..	..	1·60
Burdwan.								
Burdwan ..	Kalna ..	..	..	..	..	..	..	0·43
	Burdwan (Obsy.) ..	..	..	0·04	0·03	..	0·07	..
	Katwa ..	..	..	0·45	..	..	0·15	..
	Asansol (Obsy.) ..	..	..	..	0·12	..	..	..
	Mankar ..	..	..	..	..	..	..	..
	Mangalkot ..	..	..	..	..	..	..	..
	Royna ..	..	..	..	..	..	..	1·20
	Monteswar ..	..	..	..	..	..	..	..
Birbhum ..	Suri ..	..	..	..	0·01	0·30	0·39	..
	Hetampur ..	..	..	..	..	0·18	..	..
	Rampurhat ..	..	..	2·50	..	0·15	..	..
	Bolpur ..	..	..	..	..	..	0·29	..
	Murarai ..	..	1·07	..	..	2·01	..	..
	Labpur ..	..	..	..	..	..	0·25	..
	Nalhati* ..							
	Mayureswar ..	..	..	..	..	2·00	..	..

* Not reported.

FOR THE MONTH OF MAY 1936.

calculated using the data of only those stations for which normals are available.

8	9	10	11	12	13	14	15	16	17	18	19	20
1·14	..	..	0·28	..	0·68	0·03	0·26	1·02	0·84	..	0·24	0·12
1·21	..	0·24	1·10	..	..	0·26	0·15	2·01	1·45	..	1·68	0·68
0·66	0·16	..	0·27	..	0·11	0·22	..	0·03	0·66	..	0·63	0·01
1·30	..	..	..	..	..	..	..	0·26	..	..	0·50	..
1·29	..	1·24	0·24	..	..	..	..	0·03	1·60	0·04	1·45	..
..	..	0·73	0·49	0·22	..	..	..	0·28	0·58	..	0·42	..
..	1·07	..	..	..	..	..	..	1·17	..	1·27	..	..
0·10	0·10	0·30	..	0·15	..	..	..	..	..	0·35	..	..
2·19	..	..	0·11	..	1·30	..	..	0·25	0·40	0·18	0·18	..
..	..	..	..	0·04	..	..	0·37	..	..	0·56	0·07	0·11
0·45	..	0·82	..	..	..	..	..	0·75	..	0·12	0·95	..
0·10	.	1·27	..	..	0·04	0·02	..	..	..	0·03	0·52	..
..	..	1·40	0·46	0·39	0·03	..	..	0·01	..	0·22	1·12	..
..	0·48	0·67	..	..	..	..	0·40	..	0·40	0·50	..	..
2·15	..	1·88	0·98	..	..	..	..	0·15	..	0·28	..	..
1·15	..	0·18	..	..	..	..	..	2·30	..	0·09	0·34	..
..	0·05	..	..	..	..	..	..	..	0·64	1·05	..	..
0·06	..	..	0·18	..	..	..	..	..	..	0·41	0·18	..
..	..	..	..	..	0·19	..	..	0·10	..	0·38	0·42	..
..	0·12	..	..	0·60	..	..	0·46	..	0·26	1·10	..	..
..	..	..	..	..	..	..	..	0·08	..	0·56	0·14	..
..	..	..	0·35	..	..	..	..	0·35	..	0·11	0·11	..
..	..	..	0·61	..	..	..	..	0·21	..	0·48	..	..
..	0·51	0·71	..	..	..	..	1·32	..	0·62	0·55	..	0·31
..	..	..	0·36	..	..	..	..	0·21	..	0·17	..	..
..	..	..	0·37	..	..	..	..	..	..	0·52	0·68	..
..	..	..	0·27	..	0·17	..	..	..	..	0·66	1·80	..
..	..	0·02	0·21	..	..	..	..	..	..	0·60	0·30	..
..	..	..	0·60	0·02	..	..	0·20	0·42	0·22	0·85	2·55	1·08
0·87	..	0·88	0·05	..	0·81	..	..	0·02	0·11	0·14	3·40	0·06
..	0·59	0·19	0·15	0·34	..	..	..	0·53	0·08	0·33	..	..
..	0·80	0·80	0·51	0·50	..	..	..	0·15	0·10	0·60	..	..
0·54	..	0·84	..	..	0·48	..	..	..	0·12	0·15	1·28	..
2·31	..	0·04	0·02	..	1·84	..	..	..	0·43	0·43	0·45	..
3·48	..	..	..	0·50	0·50	..	..	..	..	..	..	0·11
3 37	..	0·28	..	0·05	0·65	..	..	0·12	0·11	..	0·82	0·31
2·30	..	..	..	..	0·80	..	..	0·35	..	1·80	..	..
2·75	..	..	0·19	..	1·56	0·02	0·03	0·65	3·65	0·86	0·48	..
3·22	..	0·27	0·25	0·03	1·20	..	..	0·72	0·45	0·12	2·30	0·24
0·25	2·00	2·50	..	1·00	..	..	..	..	..	..	2·50	..
..	0·40	0·09	..	3·89	..	..	0·27	..	..	0·65	..	..
..	..	..	0·59	2·40	..	..	..	0·15	..	..	0·98	..
..	..	..	3·50	4·10	..	..	..	4·43	..	..	..	2·50
..	..	..	0·10	0·25	2·25	..	2·75	0·50	..	2·50	..	..
..	..	0·29	..	2·65	..	..	..	..	..	0·69	1·51	..
..	2·02	.	..	..	..	..	..	..	0·45	0·93	..	0·20
0·67	..	1·67	0·04	..	0·06	..	..	..	0·19	0·30	1·64	..
..	..	1·43	..	..	..	..	..	..	..	0·40	1·82	..
..	..	..	0·05	..	..	..	..	..	0·17	0·03	0·08	..
..	..	..	..	..	..	..	..	..	..	1·44	..	..
..	1·50	..	..	..	..	..	..	0·55	0·50	0·40	..	..
..	..	..	..	0·90	..	0·70	..	..	..	1·20	..	..
..	3·50	..	..	..	..	..	..	..	..	1·30	..	0·30
..	..	0·12	0·15	..	..	..	..	0·03	..	0·19	0·67	..
..	..	0·36	0·25	..	..	..	..	..	..	..	0·50	..
..	..	1·00	..	..	..	..	..	..	..	0·78	0·18	..
..	..	1·25	..	..	..	..	..	..	..	..	1·32	..
..	..	1·08	..	..	..	..	..	..	3·05	4·03	..	..
..	..	..	0·70	..	..	..	..	..	..	..	2·60	..
..	..	..	..	1·12	..	..	..	..	..	..	..	0·05

DAILY RAINFALL RECORDED IN BENGAL

Division and district.	Station.	21	22	23	24	25	26	27
Presidency.								
24-Parganas ..	Saugar Island (Obsy.) ..	0·17	..	..	..	..	1·74	1·42
	Diamond Harbour ..	0·06	..	..	..	0·32	1·05	1·74
	Budge-Budge ..	0·41	0·31	..	..	0·31	1·13	1·11
	Canning Town	0·09	0·03	..	0·05	0·30	1·70	3·00
	Alipore (Obsy.)	0·12	0·14	..	..	0·18	0·20	0·73
	Barrackpore	..	..	0·32	0·22	0·24	1·14	0·12
	Dum Dum	1·43	..	..	0·27	..	1·02	1·54
	Baraset	..	..	..	..	0·60	0·35	0·90
	Basirhat	0·11	1·43	..	2·33	..	..	0·84
	Gosaba	0·09	..	0·17	0·77	1·11	2·10	6·51
Nadia ..	Ranaghat	..	..	..	..	0·88	..	1·62
	Krishnagar (Obsy.) ..	..	2·14	..	1·07	0·04	0·02	0·76
	Chuadanga	0·12	..	..	..	0·66	0·05	1·23
	Meherpur	..	..	0·45	0·35	..	1·37	1·85
	Kushtia	0·80	..	..	0·85	..	..	1·10
	Haringhata	0·06	0·20	..	0·29	..	..	0·38
Murshidabad ..	Kandi	..	..	..	0·57	..	1·13	0·73
	Berhampore (Obsy.) ..	..	..	..	..	0·18	..	1·70
	Lalbagh	..	..	..	..	..	..	1·55
	Azimganj	..	..	0·02	..	..	0·95	2·17
	Jangipur	..	..	..	..	..	0·08	1·26
	Lalgola	..	..	..	..	..	..	1·60
	Akriganj	..	..	..	0·66	..	..	2·40
	Patkabari	..	..	..	0·18	..	1·77	1·38
	Dumkal	0·09	..	..	..	0·61	..	0·92
	Kalyanganj (Ishanpur) ..	..	..	..	..	0·38	..	1·35
	Khargram	..	..	..	..	..	..	1·07
	Bharatpur	..	..	0·32	..	..	..	1·18
Jessore ..	Narail	..	0·04	..	0·39	..	0·62	2·21
	Jessore (Obsy.)	0·44	..	..	..	0·35	0·28	0·93
	Jhenida	0·34	..	0·38	0·65	..	..	0·42
	Magura	0·13	..	..	..	0·30	0·40	3·20
	Bongaon	..	..	..	1·06	..	0·24	..
Khulna ..	Satkhira (Obsy.)	..	1·01	..	1·15	0·03	0·28	0·64
	Bagerhat	..	..	..	0·35	0·50	0·50	1·00
	Khulna (Obsy).	0·06	0·04	..	..	0·10	0·46	0·60
	Kaliganj	..	..	..	..	..	..	0·41
	Nakipur	0·20	..	0·02	0·23	..	0·56	0·84
	Dumuria	..	0·32	..	..	0·40	0·32	0·16
	Rampal	0·75	..	..	0·02	0·52	0·02	1·50
	Kalaroa	1·05	..	0·18	0·02	0·10	1·24	5·51
	Paikgachha (Raruli) ..	..	..	0·63	0·10	0·35	0·92	3·00
	Mollahat	..	..	..	..	..	0·65	5·00
	Morelganj	..	..	2·05	..	0·23	2·06	1·25
	Ishamkati	0·32	..	..	0·33	..	0·41	0·85
Burdwan.								
Burdwan ..	Kalna	0·08	..	0·42	1·00	..	2·29	1·40
	Burdwan (Obsy.)	..	..	..	0·22	0·04	..	1·56
	Katwa	0·40	..	0·30	..	..	..	1·10
	Asansol (Obsy.)	..	..	..	..	..	..	0·95
	Raniganj	..	..	..	..	0·43	..	2·00
	Mangalkot	..	..	0·35	0·12	..	0·40	1·56
	Kayna	..	..	0·50	..	..	0·58	1·35
	Monteswar	..	..	..	0·60	..	1·60	0·86
Birbhum ..	Suri	..	..	..	..	0·02	0·01	1·13
	Hetampur	..	..	..	..	..	..	1·15
	Rampurhat	..	..	..	..	..	..	1·50
	Bolpur	..	..	..	..	..	..	1·15
	Murarai	..	..	..	..	0·45	0·65	1·50
	Labpur	..	..	..	..	0·09	..	1·70
	Nalhati*							
	Mayureswar	..	..	..	..	..	..	1·10

* Not reported.

FOR THE MONTH OF MAY 1936.

28	29	30	31	Number of rainy days.	Average number of rainy days.	Total rainfall for the month.	Normal rainfall for the month.	Heaviest rainfall during the month.	Total rainfall from 1st March to 31st May 1936.	Normal rainfall from 1st March to 31st May 1936.
3·89	0·24	0·01	0·09	14	5·8	12·94	4·41	3·89	14·39	6·98
7·40	..	..	0·56	15	6·9	20·20	5·40	7·40	20·32	8·76
1·41	..	..	1·09	15	7·3	9·11	5·93	1·41	10·08	10·10
9·29	..	..	1·30	8	7·5	17·78	5·94	9·25	17·78	9·60
1·44	..	..	0·47	13	7·3	9·49	5·75	1·60	10·16	9·08
..	..	0·56	..	15	7·3	7·23	5·49	1·14	8·72	9·23
0·09	..	1·32	..	9	7·1	10·30	5·69	1·54	..	9·33
1·20	..	..	..	10	7·6	4·80	5·55	1·20	4·92	9·33
2·91	..	0·86	0·55	15	7·5	14·71	6·06	2·91	16·42	10·43
..	..	0·90	..	11	(a)	14·05	(a)	6·51	14·37	(a)
1·50	0·06	1·80	0·72	10	7·5	9·67	6·17	1·80	12·29	10·79
1·69	0·07	1·88	1·13	10	7·9	11·20	7·00	2·14	13·86	11·37
3·82	..	0·05	0·75	12	8·7	10·94	7·47	3·82	13·54	12·17
0·04	0·65	1·10	..	11	8·3	7·89	6·17	1·85	11·04	10·90
4·30	0·15	..	1·70	13	9·1	15·06	7·40	4·30	18·63	11·86
1·11	..	0·72	0·80	11	5·4	8·00	4·18	2·30	10·08	7·55
0·54	0·04	0·31	0·12	10	7·0	6·63	4·83	1·14	8·05	7·80
1·33	0·10	..	0·36	10	7·4	5·33	5·51	1·70	6·97	7·98
1·77	.	..	0·20	9	7·1	7·09	5·55	2·27	7·98	8·07
0·31	..	0·50	..	11	7·0	8·82	5·19	2·17	9·98	7·69
1·76	0·11	..	0·27	8	6·9	5·72	4·79	1·76	6·27	6·93
1·30	0·35	0·25	..	9	7·0	5·01	5·09	1·60	6·01	7·37
3·47	0·11	..	0·88	10	7·5	9·78	6·04	3·47	12·63	8·56
..	.	0·11	..	11	7·2	8·06	5·64	1·77	10·61	8·39
2·51	..	..	0·83	8	7·3	6·75	5·64	2·51	6·98	8·75
1·20	0·01	..	0·17	10	6·1	8·43	4·67	2·02	9·81	7·20
0·77	..	..	1·78	9	(a)	9·75	(a)	2·74	11·19	(a)
0·60	1·58	0·92	..	10	(a)	6·79	(a)	1·58	7·66	(a)
0·31	0·24	1·19	..	14	9·8	12·24	7·19	2·55	18·75	13·03
4·72	0·02	0·05	0·19	12	9·1	13·62	8·08	1·72	18·95	13·85
4·50	..	0·50	..	13	9·1	9·71	7·24	4·50	16·06	12·55
1·60	0·50	0·65	..	15	9·8	12·20	8·13	3·20	17·26	11·15
1·73	3·28	0·46	0·87	12	7·9	11·05	6·34	3·28	15·89	11·11
3·96	..	0·34	0·69	13	9·9	13·86	8·26	3·96	18·43	12·13
2·50	.	0·50	0·50	11	8·6	10·11	7·09	3·48	13·10	12·62
..(a)	..	0·21	0·24	12	11·6	7·42	10·33	3·37	10·69	16·00
1·30	..	.	.	7	7·3	7·16	7·39	2·80	9·34	12·96
3·26	..	0·06	0·88	13	6·5	16·24	5·84	3·65	..	10·01
2·45	..	0·15	0·20	16	8·4	12·80	7·47	3·22	11·71	13·42
..	0·03	0·70	..	9	8·6	11·79	7·33	2·50	15·17	12·18
0·05	0·07	0·19	..	11	9·2	16·17	8·13	5·51	19·54	14·15
..	..	..	0·62	11	8·2	12·99	7·28	3·25	15·72	12·98
..	..	1·89	..	8	8·9	21·61	8·53	5·00	25·13	16·77
2·50	0·25	2·20	..	14	9·6	21·14	9·20	2·75	22·88	16·03
3·09	..	..	2·50	11	8·2	14·21	7·25	3·09	17·13	13·06
..	..	0·75	0·02	10	7·1	9·99	5·65	2·29	13·90	9·94
1·78	0·11	..	0·19	10	7·1	8·64	6·13	1·78	14·35	9·91
1·45	0·22	0·10	0·82	12	7·3	8·64	5·11	1·82	10·18	8·47
0·35	0·02	0·52	0·18	6	4·1	2·77	3·26	0·95	3·28	5·09
..	..	..	..	3	3·6	3·87	4·48	2·00	5·33	7·28
..	..	1·02	0·30	10	4·7	6·70	5·09	1·56	..	9·06
0·05	..	0·50	..	8	6·3	6·98	1·70	1·35	9·67	8·34
0·76	0·10	0·60	0·30	10	4·7	9·92	3·73	3·50	..	5·98
0·49	0·03	.	0·24	9	6·0	3·78	3·82	1·13	4·51	5·88
0·30	..	..	0·72	7	6·0	3·46	3·80	1·15	3·48	5·70
3·20	1·16	0·50	..	9	6·3	10·91	4·33	3·20	12·11	6·57
..	0·65	..	..	5	5·6	4·66	3·81	1·32	9·40	5·88
..	..	0·60	..	9	6·0	14·44	5·09	4·03	14·89	7·22
0·65	0·05	..	0·07	5	6·3	6·11	4·55	2·60	8·15	7·03
..	0·12	0·05	..	..	(a)	..	(a)	..	..	(a)
					(a)	.·01	(a)	2·00		(a)

(a) Not reported. (a) Not ascertained.

DAILY RAINFALL RECORDED IN BENGAL

Division and district.	Station.	1	2	3	4	5	6	7
Burdwan — *concld.*								
Bankura ..	Bankura (Obsy.)	..	..	..	0·63	..	..	..
	Vishnupur	..	..	..	0·48	0·10	..	..
	Mahara	..	..	..	0·78	..	..	..
	Khatra	..	..	..	0·50	..	1·05	..
	Indas	..	..	..	0·16	..	0·34	..
	Kotalpur	..	..	..	..	..	0·60	..
	Onda	..	..	..	0·50	..	..	..
	Gangajalghati	..	..	..	..	..	..	..
	Rajpur	..	..	..	0·35	0·05	0·52	..
	Sonamukhi	..	..	..	..	..	..	..
	Taldangra	..	..	0·65	..	..	0·40	..
	Saranga	..	..	..	0·23	..	0·16	..
	Indpur	..	..	..	0·30	..	..	..
	Arhara	..	..	0·30	..	0·26	..	..
	Barjora	..	..	0·35	..	..	..	..
	Simlapal	..	..	0·50	0·10	0·55	..	..
	Mejia	..	..	..	..	..	..	..
	Siromanipur*							
	Palasdanga	..	..	..	..	..	..	..
	Chatna	..	..	0·20	..	..	..	..
	Ranibandh	..	..	0·07	0·20	0·72	..	0·10
	Saltora	..	..	0·15	..	0·20	..	0·04
	Joypur	..	..	..	0·55	..	0·14	..
	Ambikanagar*							
	Jairampur	..	..	..	0·50	..	0·25	..
Midnapore ..	Contai	..	..	0·01	0·17	..	..	2·46
	Tamluk	..	..	0·94	0·07	..	..	1·40
	Midnapore (Obsy.) ..	..	..	..	0·63	0·05	..	..
	Ghatal	..	..	..	..	0·82	..	1·68
	Kukrahati	..	..	0·72	..	..	..	1·98
	Amlagura	..	..	..	0·53	0·01	0·11	..
	Panskura	..	..	..	0·90	..	..	..
	Dantan	..	..	0·18	0·20	..	..	0·68
	Chandrakona	..	..	..	0·22	..	..	..
	Pachet	..	..	0·02	0·36	..	..	..
	Bhagwanpur	..	..	..	0·80	0·30	..	..
	Kashiary	..	..	0·85	0·30	..	..	1·20
	Nayabasan*							
	Silda (Belpabari) ..	..	..	0·22	0·05	0·37	0·03	0·40
	Goaltore	..	..	..	0·75	0·04	0·03	..
	Salboni	..	..	..	0·95	..	..	0·49
	Narayangarh	..	..	0·25	0·10	..	..	2·00
	Ramnagar	..	..	0·02	0·09	..	..	0·83
	Mohanpur	..	..	..	..	..	..	0·40
	Jenka (Khajri) ..	..	..	..	1·10	0·12	..	..
	Nandigram	..	..	3·26	..	..	..	1·31
	Moyna	..	..	0·25	..	..	..	..
	Pingla	..	..	0·60	0·10	..	..	..
	Narajole*							
	Kolaghat (Daiman) ..	..	..	..	0·33	0·03	0·07	..
	Balichak	..	..	..	0·67	..	..	..
	Jhargram	..	..	0·55	..	0·06	..	..
	Kharagpur	..	..	0·35	..	..	..	1·16
Hooghly ..	Serampore	..	..	0·07	..	0·55	..	0·73
	Hooghly	..	..	..	..	..	1·16	1·35
	Arambagh	..	..	..	0·21	0·01	0·40	..
	Chanditala	..	..	..	0·10	0·12	..	1·02
	Tentulia	..	..	..	..	..	..	0·67
	Boinchee	..	..	0·10	..	..	..	..
	Khanakul	..	..	0·58	..	0·10	..	1·69
	Tarakeswar*							
Howrah ..	Howrah	..	..	..	0·12	..	..	..
	Uluberia	..	..	..	0·85	..	0·30	..
	Amta	..	..	..	0·74	..	..	..
Rajshahi.								
Rajshahi ..	Boalia (Obsy.)	..	0·55	..	..	..	..	..
	Nator	..	0·02	..	..	..	..	1·02
	Naugaon	..	..	0·43	3·00	..	0·23	1·90
	Lalpur	0·10	0·62	..	..	..	..	1·15
	Manda	0·21	0·31	..	..	..	..	1·35
	Mahadebpur	0·10	..	0·34	..	..	..	0·80
	Tanor*							
	Chaugram*							
	Joari	..	..	..	..	0·75	..	2·50
	Badalgachi	..	2·10	..	..	0·00	..	1·10

*Not reported.

FOR THE MONTH OF MAY 1936.

8	9	10	11	12	13	14	15	16	17	18	19	20
..	..	..	0·45	..	..	..	..	..	..	0·19	0·59	..
0·01	..	..	0·57	..	0·08	..	..	..	..	..	1·40	..
..	..	..	0·09	..	..	..	..	..	..	..	0·50	..
..	..	..	0·40	..	..	..	0·04	0·16	..	..	0·25	0·34
0·38	..	..	0·36	..	0·06	..	2·13	0·30	..	0·70	0·94	..
..	..	..	..	..	..	..	..	..	..	1·10	0·65	..
..	..	..	..	..	..	..	..	..	..	0·13	0·65	..
..	..	..	0·29	..	..	..	..	0·31	..	..	0·42	..
0·03	..	..	..	..	..	..	..	0·12	0·14	0·17	0·95	..
..	..	..	..	..	..	..	0·26	..	0·40	..	..	..
..	..	..	0·60	..	..	..	..	0·21	..	0·89	0·94	..
0·01	..	..	..	..	..	..	..	..	..	..	0·72	0·06
..	..	..	0·19	..	..	..	..	0·20	..	..	0·70	..
..	..	0·29	..	..	..	..	..	..	..	0·19	..	..
..	..	0·14	..	..	..	..	..	0·38	0·10	1·70	..	..
..	..	0·60	..	..	..	1·00	0·30	..	0·95	0·60	0·40	..
..	..	..	..	..	..	..	..	..	..	..	0·90	..
..	..	..	..	..	..	..	..	..	0·20	..	0·50	..
..	..	..	..	..	..	..	0·06	..	0·06	0·76	..	..
..	..	0·25	..	..	..	0·40	..	..	..	0·35	..	..
..	..	0·07	..	..	..	..	0·04	0·38	0·06	0·06	..	0·04
..	..	..	0·45	..	0·10	..	..	..	..	..	0·90	..
..	..	..	0·40	..	0·52	..	..	0·18	..	0·13	3·21	..
..	..	..	0·20	0·65	..	..	..	0·42	0·27	0·50	1·16	0·06
..	0·20	0·76	..	0·25	0·39	..	..	1·01	..	0·85	..	0·25
1·47	..	0·11	..	..	0·16	0·82	0·02	0·21	..	0·78	0·56	..
..	0·11	0·41	..	0·28	..	0·60	..	0·20	0·30	0·80	..	..
..	..	0·38	0·10	..	0·40	..	0·08	0·33	..	1·47	0·09	0·07
..	..	..	0·35	..	0·12	..	..	..	..	0·85	0·50	..
1·00	..	0·20	0·25	..	1·03	0·20	..	..	0·30	0·40	0·65	..
..	0·10	..	..	0·05	0·15	0·05	0·22	0·73	..	1·15	0·70	0·20
..	..	..	..	..	..	0·65	..	0·35	0·30	0·40	0·60	..
1·15	..	0·19	0·23	..	0·38	0·11	..	0·22	0·17	0·62	1·64	..
1·95	..	..	..	..	0·90	..	..	0·90	..	0·05	0·63	..
..	..	..	..	0·85	0·35	0·22	..	1·25	0·25	0·75	2·25	..
..	..	0·18	..	..	0·62	0·48	1·57	..	..	0·38	..	..
0·07	..	0·11	..	..	..	..	..	0·16	0·09	1·00	..	0·10
..	0·37	0·33	..	..	..	0·35	0·05	0·70	1·30	..	..	..
..	..	0·83	..	0·71	..	..	0·03	0·20	0·25	0·70	0·48	0·25
..	0·11	0·04	..	2·84	..	..	0·23	..	0·31	1·58	..	0·64
1·00	..	..	..	..	0·30	0·35	..	0·50	0·40	0·30	..	0·50
2·30	..	..	0·12	..	0·12	..	0·55	0·35	0·17	..	1·10	2·25
..	..	0·31	..	..	..	..	..	0·26	..	1·12	0·16	1·38
1·80	0·15	0·08	..	0·60	..	0·10	..	0·60	..	0·50	..	..
1·00	..	0·54	0·02	0·70	1·52	..	..	0·50	1·10	0·81	..	..
0·51	..	0·07	0·40	..	0·13	1·90	..	0·02	1·07	0·05	0·61	0·19
1·28	..	0·10	0·28	..	0·38	0·48	..	..	0·61	1·27	0·37	..
..	..	0·48	..	..	..	0·68	1·98	1·10	0·76	..	..	..
..	..	0·47	..	..	0·66	..	0·92	0·53	0·41	0·74	..	0·08
..	1·24	..	..	0·04	..	..	..	0·08	0·02	0·57	..	0·23
2·52	..	0·58	0·24	..	0·02	..	..	0·17	0·02	0·20	1·25	..
0·50	..	..	0·20	..	0·36	..	..	..	0·46	0·21	0·87	..
..	1·20	0·15	..	..	..	..	..	0·98	..	0·92	..	0·65
..	0·67	..	..	..	..	..	..	..	0·22	1·83	..	..
0·56	..	1·09	0·36	..	..	..	..	..	..	0·20	1·78	..
..	0·45	0·15	..	0·24	..	..	..	1·20	0·47	0·82	..	..
1·52	..	1·94	0·17	..	0·05	..	..	..	1·35	..	0·98	0·26
1·45	..	0·27	0·30	..	0·35	..	..	..	2·50	..	1·40	0·70
1·50	..	..	0·25	..	..	..	..	..	1·10	..	0·90	..
0·60	..	..	0·80	..	..	..	..	..	..	0·12	..	..
..	0·97	0·29	..	..	..	..	..	1·00	..	..	0·07	..
..	..	..	1·50	0·06	..	..	..	..	..	..	..	..
..	..	0·03	1·00	..	..	..	..	..	..	0·04	0·47	0·15
0·42	..	..	..	..	..	..	..	..	..	0·55	..	..
..	0·20	..	0·85	..	..	..	..	0·43	..	..	..	..
..	..	1·85	1·00	..	..	..	..	..	0·10	0·50	..	0·75
..	0·10	1·00	..	..	0·10	..	..	..	..	..	..	..

DAILY RAINFALL RECORDED IN BENGAL

Division and district.	Station.	21	22	23	24	25	26	27
Burdwan -*Concld.*								
Bankura ..	Bankura (Obsy.)	..	..	..	0·80	0·10	0·01	1·22
	Vishnupur	..	..	..	..	1·00	0·01	1·12
	Maliara	..	..	0·46	..	..	0·08	1·39
	Khatra	..	..	..	..	..	0·10	1·90
	Indas	..	..	..	..	..	0·04	0·98
	Kotalpur	..	..	..	..	0·65	..	1·02
	Onda	..	..	..	..	..	..	1·50
	Gangajalghati	..	..	..	..	..	0·36	0·85
	Rajpur	..	..	..	..	..	0·72	0·78
	Sonamukhi	..	..	..	..	..	..	1·60
	Taldangra	..	..	..	..	..	..	1·83
	Saranga	..	0·03	..	..	..	0·56	1·41
	Indpur	..	..	..	..	0·89	0·01	1·92
	Arhara	..	..	..	..	0·48	0·58	0·38
	Barjora	..	..	..	..	0·33	..	0·52
	Simlapal	..	..	..	0·50	0·10	1·60	0·60
	Mejia	..	..	..	..	..	0·04	0·30
	Siromanipur*							
	Palasdanga	..	..	..	..	..	0·10	0·84
	Chatna	..	..	..	..	0·26	0·80	0·07
	Ranibandh	..	..	..	..	0·24	2·40	..
	Saltora	..	..	..	0·23	..	0·38	0·14
	Joypur	..	..	..	..	1·30	..	0·85
	Ambikanagar*							
	Jairampur	..	..	..	..	0·02	..	1·40
Midnapore ..	Contai	0·22	..	..	0·42	0·20	2·40	2·38
	Tamluk	0·02	..	0·12	..	0·49	2·18	8·12
	Midnapore(Obsy.) ..	0·05	..	..	..	..	0·80	1·00
	Ghatal	..	..	0·30	..	..	1·00	0·93
	Kukrahati	..	..	..	0·12	0·81	3·06	8·25
	Anilagura	..	..	..	0·15	0·05	..	0·70
	Panskura	0·10	0·50	..	..	..	0·30	1·55
	Dantan	0·09	0·05	0·45	0·70	2·28	3·97	..
	Chandrakona	..	..	..	..	..	..	1·10
	Pachet	1·88	..	..	..	0·32	0·51	1·56
	Bhagwanpur	0·35	..	..	..	..	1·15	2·30
	Kashiary	..	1·12	1·22	1·35	0·60	3·90	..
	Nayabasan*							
	Silda (Belpabari) ..	..	..	..	..	0·52	1·13	1·18
	Goaltore	..	..	..	..	..	0·11	0·85
	Salboni	..	..	..	..	..	0·79	1·49
	Narayangarh	0·45	..	0·07	0·10	0·50	1·70	1·15
	Ramnagar	..	..	0·04	0·65	0·64	3·35	3·90
	Mohanpur	..	..	..	0·50	1·10	1·10	2·40
	Jonka (Khajri)	0·55	..	..	..	0·10	0·95	1·75
	Nandigram	..	..	..	0·06	2·00	3·12	4·64
	Moyna	..	..	..	..	0·10	3·50	3·84
	Pingla	..	..	..	0·56	0·10	0·08	2·00
	Narajole*							
	Kolaghat (Daiman) ..	0·03	0.02	..	0·24	..	0·12	0·31
	Balichak	0·25	..	..	..	0·12	0·10	1·01
	Jhargram	..	..	..	..	0·06	3·40	1·42
	Kharagpur	..	..	..	0·06	0·22	1·04	0·40
Hooghly ..	Serampore	..	..	0·50	..	0·09	0·40	1·38
	Hooghly	0·06	0·69	0·18	..	0·02	0·30	1·46
	Arambagh	..	..	..	0·05	..	0·02	1·20
	Chanditala	..	..	..	..	..	0·50	0·85
	Tentulia	..	..	0·10	..	..	1·50	1·60
	Boinchee	..	..	..	..	..	0·01	1·07
	Khanakul	..	..	..	..	..	1·32	1·62
	Tarakeswar*							
Howrah ..	Howrah	0·11	1·22	..	0·04	0·15	0·22	0·58
	Ulubaria	..	..	..	..	0·52	1·15	1·60
	Amta	..	..	..	0·47	..	0·53	0·90
Rajshahi.								
Rajshahi ..	Boalia (Obsy.)	..	..	..	0·30	..	..	1·20
	Nator	..	..	..	..	1·15	0·40	2·27
	Naugaon	..	..	..	0·30	..	..	1·00
	Lalpur	0·19	..	..	..	..	0·59	2·50
	Manda	..	..	..	..	..	2·20	1·30
	Mahadebpur	..	..	..	..	0·76	0·61	2·50
	Tanor*							
	Chaugram*							
	Joari	..	..	..	..	..	1·75	2·50
	Badalgachi	..	..	..	..	..	0·10	..

* Not reported.

FOR THE MONTH OF MAY 1936.

28	29	30	31	Number of rainy days.	Average number rainy days.	Total rainfall for the month.	Normal rainfall for the month.	Heaviest rainfall during the month.	Total rainfall from 1st March to 31st May 1936.	Normal rainfall from 1st March to 31st May 1936.
0·11	0·37	..	0·21	10	6·1	4·68	4·84	1·22	5·57	7·41
0·70	..	..	0·25	8	6·9	5·72	4·76	1·40	7·06	7·72
0·19	..	..	0·16	6	5·7	3·65	3·83	1·39	4·70	5·87
0·40	0·20	..	..	10	5·7	5·34	3·86	1·90	..	6·30
0·90	0·02	..	0·75	11	6·4	8·06	5·26	2·13	11·19	8·34
1·05	..	0·05	0·25	7	5·8	5·37	5·19	1·10	9·16	8·87
0·40	0·05	..	..	5	5·3	3·23	3·06	1·50	3·73	5·17
0·17	..	0·42	0·31	8	5·1	3·13	3·57	0·85	4·10	5·78
0·30	..	..	..	9	6·7	4·13	5·12	0·95	4·71	8·12
0·75	..	0·12	..	5	5·6	3·13	4·78	1·60	5·59	7·49
0·87	..	..	0·21	9	5·5	6·60	3·18	1·83	7·47	5·19
0·58	..	..	0·11	7	6·0	3·87	5·64	1·41	5·04	8·16
0·30	..	..	0·32	8	5·3	4·83	3·89	1·92	5·91	5·67
0·01	..	0·26	..	8	(n)	2·81	(n)	0·58	..	(n)
..	..	..	..	7	(n)	3·52	(n)	1·70	5·13	(n)
0·05	..	0·15	..	14	(n)	8·00	(n)	1·60	8·75	(n)
0·27	0·01	0·50	..	4	(n)	2·02	(n)	0·90	2·62	(n)
					(n)		(n)			(n)
0·85	..	..	0·22	6	(n)	2·71	(n)	0·85	4·50	(n)
0·07	..	0·67	0·07	5	(n)	3·02	(n)	0·80	..	(n)
..	..	..	..	8	(n)	4·73	(n)	2·40	5·13	(n)
..	1·30	0·10	0·10	9	(n)	3·29	(n)	1·30	3·91	(n)
0·88	..	0·67	..	9	(n)	5·84	(n)	1·30	6·34	(n)
					(n)		(n)			(n)
1·90	0·02	0·30	..	10	(n)	8·83	(n)	3·21	13·47	(n)
4·47	0·45	..	..	15	6·2	16·44	5·12	4·47	16·76	7·83
..	2·05	3·05	..	15	6·6	22·15	5·03	8·12	24·86	8·53
0·27	0·06	..	0·35	12	7·3	7·34	5·32	1·47	9·14	8·62
..	..	0·50	..	13	7·0	7·93	5·28	1·68	9·31	8·95
0·06	0·09	0·75	..	13	6·4	19·66	5·43	8·25	20·06	8·58
2·78	0·08	..	0·30	10	6·5	6·53	4·71	2·78	7·90	8·29
3·40	..	..	0·80	15	7·9	11·58	5·58	3·40	13·97	9·18
0·30	..	..	..	15	6·7	12·25	4·83	3·97	13·17	8·29
1·37	..	..	0·36	9	5·9	5·35	4·96	1·37	..	8·21
..	..	..	..	14	6·3	9·36	5·22	1·88	..	8·67
1·00	0·14	..	0·33	12	6·7	10·80	4·91	2·30	11·36	8·80
..	..	..	..	15	6·1	16·46	4·82	3·90	..	8·54
					5·4		5·68			8·15
0·06	..	..	..	11	6·7	7·19	4·66	1·57	8·05	8·02
0·90	..	..	0·16	8	7·1	4·37	5·01	1·00	5·60	7·97
0·04	..	..	..	9	7·6	6·86	4·77	1·49	9·29	7·18
0·04	..	..	..	16	6·1	10·71	8·54	2·00	13·71	12·62
1·37	..	..	..	12	6·0	16·64	5·19	3·90	16·95	7·92
..	..	1·00	..	13	6·3	9·85	5·39	2·40	9·85	9·20
4·80	0·07	..	0·75	16	6·3	17·15	5·46	4·80	17·89	8·51
0·07	..	0·21	..	11	7·2	17·90	5·11	4·64	18·00	8·44
..	0·04	0·03	..	10	7·3	11·59	5·39	3·84	..	8·69
2·13	..	..	0·10	14	7·3	12·76	5·33	2·13	13·10	8·65
					5·5		5·97			11·20
1·92	..	..	0·45	13	(n)	8 47	(n)	1·92	9·94	(n)
1·91	0·02	..	0·27	15	(n)	9·12	(n)	1·91	10·08	(n)
0·07	.	..	..	8	(n)	10·56	(n)	3·40	14·89	(n)
..	..	..	..	11	(n)	7·04	(n)	1·16	8·06	(n)
0·15	..	1·05	..	10	7·6	7·10	5·20	1·38	8·12	8·80
1·88	..	0·12	1·21	15	7·7	13·44	6·00	2·52	17·43	9·88
1·57	0·11	..	0·20	12	7·2	6·37	5·53	1·57	6·92	8·89
..	1·10	..	0·59	12	(n)	8·18	(n)	1·20	..	(n)
0·82	..	0·55	..	9	(n)	7·96	(n)	1·83	12·99	(n)
1·53	0·10	..	0·67	10	(n)	7·47	(n)	1·78	11·50	(n)
..	0·60	..	..	12	(n)	9 24	(n)	1·69	9·54	(n)
					(n)		(n)			(n)
1·35	0·02	..	0·59	14	7·0	10·67	5·03	1·94	11·94	8·42
4·25	..	..	1·70	14	7·3	17·34	5·46	4·25	18·12	8·93
1·55	..	..	1·34	10	7·6	9·28	6·11	1·55	10·83	10·99
3·70	0·30	0·10	0·45	10	7·4	8·12	5·57	3·70	8·39	6·55
0·05	0 10	0·35	..	8	8·1	6·79	7·02	2·27	7·44	8·31
2·25	..	1·50	..	9	4·9	12·17	6·04	3·00	13·16	8·54
0·03	1·00	..	..	10	8·1	7·87	6·63	2·50	8·00	9·98
0·23	..	..	..	8	6·4	6·57	5·26	2·20	7·37	7·34
0·12	0·05	..	..	10	7·4	6·76	5·63	2·50	7·98	7·73
					6·0		5·10			7·11
					(n)		(n)			(n)
..	0·75	1·00	..	11	(n)	13·55	(n)	2·50	13·60	(n)
1·30	..	1·30	..	9	(n)	8·00	(n)	2 10	9·00	(n)

(n) Not ascertained.

DAILY RAINFALL RECORDED IN BENGAL

Division and district.	Station.	1	2	3	4	5	6	7
Rajshahi.								
Dinajpur ..	Nithpur	..	..	0·43	..	..	..	0·06
	Nawabganj	..	1·00	..	0·17	0·25	1·50	0·20
	Gangarampur	..	1·58	0·23	0·23	..	..	..
	Itahar	..	0·85	0·24	0·08	..	0·04	0·24
	Raiganj	..	..	1·20	0·80	0·35	..	0·70
	Dinajpur (Obsy.) ..	..	0·26	0·64	0·31	1·68	0·48	2·79
	Balurghat	..	..	1·30	0·19	..	..	1·28
	Thakurgaon	..	0·71	0·29	1·68	0·40	0·28	0·93
	Setabganj	..	..	1·26	0·57	1·32	..	0·95
	Ramganj*							
	Atwari*							
	Birganj	..	2·20	1·21	1·39	0·11	1·04	..
	Parbatipur	..	0·65	1·50	0·85	0·10	2·18	..
	Patnitola	..	..	0·87	0·02	..	0·92	1·70
	Sapahar	..	..	..	..	..	..	..
Jalpaiguri ..	Jalpaiguri (Obsy.) ..	0·06	1·07	0·20	..	0·70	0·32	0·55
	Alipur Duars ..	0·42	0·94	0·06	0·05	0·15	..	0·15
	Falakata	..	1·10	..	0·10	0·19	0·28	0·94
	Debiganj	..	0·25	0·40	1·02	0·92	0·20	0·80
	Buxa*							
	Kalchini	1·24	0·27	0·02	0·01	0·12	0·04	0·02
	Kumargram*							
Darjeeling ..	Siliguri	1·22	..	..	0·26	2·16	0·46	1·53
	Darjeeling (Obsy.) ..	0·19	0·46	0·03	..	1·68	0·79	0·04
	Kalimpong (Obsy.) ..	0·06	0·25	..	..	0·01	0·03	0·16
	Mongpoo	0·20	1·05	0·06	..	0·20	1·72	0·65
	Kurseong	0·05	0·30	..	..	0·22	..	1·60
	Pedong	0·78	1·75	..	0·72	..	0·05	0·07
Rangpur ..	Bhawaniganj (Gaibandha) ..	0·10	2·50	1·09	0·14	0·02	0·15	1·65
	Rangpur (Obsy.) ..	..	..	0·50	1·46	0·34	..	1·51
	Pirganj	..	0·70	0·80	0·45	0·10	1·12	..
	Kurigaon	..	0·12	0·90	3·15	1·21	0·07	2·91
	Gobindganj	..	..	1·25	0·10	..	..	..
	Bagdogra (Nilphamari) ..	..	0·61	1·06	0·50	..	0·90	0·64
	Ulipur	..	..	1·10	1·70	1·23	0·02	3·45
	Sunderganj	..	..	1·30	0·57	0·56	1·28	2·68
	Saidpur	0·24	0·46	0·81	0·58	0·03	1·67	..
Bogra ..	Sherpur	..	..	..	0·48	..	0·15	0·26
	Nowkhilla	0·16	..	0·55	..	0·48	0·60	0·85
	Bogra (Obsy.)	..	..	0·05	0·11	..	0·52	0·12
	Panchbibi	..	0·15	0·47	..	..	0·50	1·52
	Khetlal	..	..	..	..	..	..	..
	Adamdighi	..	0·90	1·60	..	1·10	2·47	..
	Dubchanchia	..	..	0·85	0·75	..	..	0·59
Pabna ..	Shazadpur	1·66	..	1·35	..	..	0·13	1·82
	Pabna	..	1·51	0·03	0·02	..	..	0·30
	Sirajganj (Obsy.) ..	..	1·31	0·10	0·09	..	0·77	0·58
	Iswardi	..	..	0·18	..	..	..	..
Malda ..	Malda (Obsy.)	..	..	0·24	..	..	..	..
	Chanchal	..	..	1·13	0·03	..	..	..
	Gazol	..	0·46	..	..	..	0·05	..
	Sibganj	..	..	..	..	..	..	..
	Gomastapur	..	..	0·58	..	..	..	..
	Nawabganj	0·23	0·15	..	..	..	..	..
Dacca.								
Dacca ..	Munshiganj	..	0·07	0·02	..	..	..	0·40
	Dacca	..	0·30	0·07	..	..	..	0·21
	Nawabganj	1·20	0·40	0·05	..	..	..	0·25
	Narayanganj (Obsy.) ..	..	0·23	0·28	..	..	0·02	0·19
	Narsingdi	0·05	..	1·60	..	1·10	..	1·60
	Manikganj	0·08	0·78	..	..	..	..	0·60
	Joydebpur	0·24	0·37	0·15	..	1·44	2·65	1·31
	Kapasia	0·15	..	0·90	0·11	..	2·00	1·50

* Not reported.

FOR THE MONTH OF MAY 1936.

8	9	10	11	12	13	14	15	16	17	18	19	20
0·74	0·44	..	0·06	0·05	..	..	..	..	..	..	..	..
..	..	1·00	..	..	..	..	..	..	..	..	..	..
..	..	..	..	0·35	..	..	..	..	..	..	..	..
..	..	0·36	0·34	..	..	..	..	..	..	..	..	..
0·25	..	..	..	..	..	..	..	..	..	0·15	..	..
0·09	..	..	1·01	0·30	..	..	..	..	..	..	..	..
0·30	0·48	..	0·32	0·95	..	..	..	..	..	..	..	..
..	..	0·76	..	..	..	..	..	0·05	1·54	0·07	..	..
..	0·55	..	..	..	..	..	..	..	..	..	..	..
..	0·05	..	..	..	..	..	..	..	..	..	..	..
..	..	0·71	0·38	..	..	..	..	..	..	..	..	..
..	..	..	2·16	0·76	..	..	..	..	..	..	..	..
..	0·61	0·98	..	1·55	..	..	..	..	..	..	..	..
1·31	1·26	2·50	0·01	..	..	..	..	0·03	0·64	0·01	0·07	..
0·18	0·72	3·05	..	..	..	..	..	..	..	0·92	..	..
1·75	0·96	..	..	..	..	..	..	..	0·25	0·07	..	..
..	0·23	0·19	0·14	..	..	..	..	..	0·18	..	..	..
1·41	0·69	0 34	0·06	..	..	..	..	0·13	3·42	..	0·56	0·24
1·06	0 91	..	..	..	..	..	0·34	0·83	0·39	0 26	0·27	..
0·35	0·09	0·50	0·01	..	..	..	0·90	..	0·11	0·70	0·05	0·06
0·35	..	0·48	..	..	0·03	..	..	0·71	0·10	..	0·05	0·01
0·33	0·42	0·68	0·01	..	0·01	..	..	..	2·20	0·01	0·02	0·01
0·22	0·34	1·20	0·04	0·10	..	0·34	0·14	0 21	2·00	..	..	..
0·63	..	1·10	..	..	..	..	..	..	0·69	0 21	..	0·01
..	..	..	0·60	0·06	0·24	..	..	..	..	..	..	..
0·55	0·05	0·25	0·05	0·08	..	..	..	..	..	..	..	..
0·30	..	0·60	..	..	..	..	..	..	..	..	..	..
0·25	0·19	0·67	0·06	..	..	..	..	..	..	..	..	..
..	..	..	0·71	..	..	..	..	..	..	..	..	..
..	0·21	..	..	..	..	..	..	..	..	0·16	..	..
0·38	..	0·60	0·37	0·47	..	..	..	..	..	..	..	..
0·23	..	..	1·16	1·25	..	..	..	..	..	..	..	..
0·03	..	..	..	..	..	..	..	..	..	..	..	..
1·07	..	..	0·61	..	0·80	..	..	..	..	..	..	0 24
..	0·16	0·91	1·82	..	..	..	..	..	..	..	..	..
1·65	..	..	1·20	1·49	0·13	..	..	..	..	..	..	..
..	..	0·43	0·46	..	..	..	..	..	..	..	..	..
..	.	0·86	1·10	..	..	..	..	..	..	..	..	..
..	..	1·50	..	..	..	..	..	..	..	..	..	..
1·35	0·11	..	0·13	0·50	..	..	..	..	0·15	..	..	..
..	0·32	0·65	..	..	..	..	0·23	..	..	..	..	0·29
1·35	..	0·29	1·86	0·11	..	..	..	0·03	..	0·25	..	..
0·67	..	..	0·26	..	1·70	..	..	..	..	..	..	0·41
1·00	..	0 47	1·10	..	..	..	..	..	0·26	0·34	..	0 42
0·04	0·03	..	0·67	..	..	..	..	..	..	..	..	..
2·00	..	..	0·01	0·04	..	..	..	..	..	..	..	..
..	..	..	..	0·95	..	..	..	..	..	..	..	..
..	..	0·75	..	..	..	..	..	..	..	..	..	..
0·30	..	..	1·00	..	..	..	..	0·40	..	..	..	..
..	..	2·98	..	..	..	..	..	0·06	0·03	..	..	..
5·96	..	..	0·38	0·28	1·10	..	..	0·11	0·42	0·09	..	..
3·53	..	..	0·38	..	0·07	..	..	0·48	0·05	1·10	2·14	..
3·05	..	..	0·43	0·12	..	..	..	0·55	.	0 25	..	0·20
4·20	..	0·02	0·25	0·54	0·59	..	..	0·07	0·30	0·60	0·06	0·02
..	..	1·40	..	..	..	..	..	..	..	1·19	0·35	..
1·94	..	..	0·30	..	..	..	..	0·70	..	2 05	..	..
..	0·02	1·09	0·02	1·63	..	..	0·35	..	0·12	..	..	..
0·25	..	..	2·63	..	1·73	..	..	..	..	1·00	0 12	..

DAILY RAINFALL RECORDED IN BENGAL

Division and district.	Station.	21	22	23	24	25	26	27
Rajshahi.								
Dinajpur ..	Nithpur	..	..	..	..	0·67	..	0·65
	Nawabganj	..	..	0·50	0·60	..	1·05	1·04
	Gangarampur	..	..	..	..	..	0·13	0·87
	Itahar	..	..	..	0·06	..	0·37	0·30
	Raiganj	..	..	..	..	..	..	1·50
	Dinajpur (Obsy.)	..	..	..	..	2·42	..	0·61
	Balurghat	..	..	..	..	0·23	0·05	0·55
	Thakurgaon	..	..	..	0·03	1·08	..	0·70
	Setabganj	..	..	..	..	3·46	..	3·18
	Ramganj*							
	Atwari*							
	Birganj	..	..	..	..	3·59	..	1·38
	Parbatipur	..	..	..	0·74	..	0·72	1·44
	Patnitola	..	..	..	..	..	..	0·52
	Sapahar	..	..	..	..	..	..	0·55
Jalpaiguri ..	Jalpaiguri (Obsy.) ..	..	..	2·34	1·00	3·12	0·01	0·22
	Alipur Duars	..	..	2·12	1·43	0·13	..	..
	Falakata	0·03	2·24	..	1·60	1·05	..	0·40
	Debiganj	..	..	2·58	..	0·90	..	0·72
	Buxa*							
	Kalchini	..	0·68	2·94	3·08	0·22	..	0·95
	Kumargram*							
Darjeeling ..	Siliguri	0·24	4·32	1·34	0·42	1·16	0·22	0·22
	Darjeeling (Obsy.) ..	0·01	0·10	1·30	0·55	0·01	0·27	1·38
	Kalimpong (Obsy.) ..	0·01	0·10	1·19	0·61	0·41	..	2·70
	Mongpoo	..	..	2·35	3·28	0·93	0·21	1·28
	Kurseong	0·73	..	2·64	2·71	0·55	0·13	2·00
	Pedong	..	0·50	0·95	0·21	0·55	0·10	1·15
Rangpur ..	Bhawaniganj (Gaibandha) ..	..	..	..	..	..	0·06	0·26
	Rangpur (Obsy.)	..	..	..	0·07	1·62	..	0·73
	Pirganj	..	..	..	..	..	0·55	1·30
	Kurigaon	..	0·12	..	..	0·80	0·11	0·76
	Gobindganj	..	..	..	..	..	..	0·50
	Bagdogra (Nilphamari) ..	..	1·01	..	..	5·04	0·34	1·16
	Ulipur	..	..	..	..	..	0·15	0·53
	Sunderganj	..	..	..	..	0·27	..	0·36
	Saidpur	..	0·41	..	3·07	..	0·96	1·17
Bogra ..	Sherpur	..	..	0·64	0·59	..	..	0·98
	Nowkhilla	..	..	..	..	..	1·37	3·48
	Bogra (Obsy.)	..	..	..	..	0·03	..	1·06
	Panchbibi	..	..	0·30	..	0·34	0·65	1·40
	Khetlal	..	..	..	..	..	..	1·05
	Adamdighi	..	..	..	..	..	1·30	2·05
	Dubchanchia	..	..	..	..	..	..	0·57
Pabna ..	Shazadpur	..	..	..	..	0·59	0·59	2·94
	Pabna	..	..	..	1·21	0·02	..	0·89
	Sirajganj (Obsy.)	..	..	..	0·12	..	..	1·54
	Iswardi	..	..	..	1·10	..	..	0·55
Malda ..	Malda (Obsy.)	..	..	..	1·05	..	..	0·98
	Chanchal	..	..	..	..	0·22	..	0·26
	Gazol	..	..	..	0·50	..	0·46	0·82
	Sibganj	..	..	..	..	..	..	0·44
	Gomastapur	..	..	..	..	..	..	0·60
	Nawabganj	..	..	..	0·10	0·35	0·55	0·55
Dacca.								
Dacca ..	Munshiganj	..	..	..	0·30	0·41	0·07	2·40
	Dacca	..	..	..	0·25	0·12	..	2·14
	Nawabganj	..	..	..	0·22	..	0·10	1·50
	Narayanganj (Obsy.) ..	..	..	..	..	0·42	0·05	2·80
	Narsingdi	..	..	..	0·60	..	1·50	4·25
	Manikganj	..	..	..	..	..	..	1·50
	Joydebpur	..	..	..	0·12	..	2·00	4·45
	Kapasia	..	..	..	..	..	..	2·20

* Not reported.

FOR THE MONTH OF MAY 1936.

28	29	30	31	Number of rainy days.	Average number of rainy days.	Total rainfall for the month.	Normal rainfall for the month.	Heaviest rainfall during month.	Total rainfall from 1st March to 31st May 1936.	Normal rainfall from 1st March to 31st May 1936.
1·02	0·35	..	0·89	8	5·3	5·36	4·88	1·02	7·38	6·44
2·00	1·45	..	0·30	13	7·2	11·06	7·13	2·00	11·97	9·17
0·24	0·10	0·71	..	9	6·5	4·44	6·03	1·58	5·88	8·38
..	0·02	1·29	0·60	9	6·5	4·79	4·59	1·29	5·74	6·57
0·35	..	..	0·50	9	7·1	6·10	5·59	1·50	6·60	7·77
0·72	0·27	0·07	0·11	13	8·9	11·66	7·59	2·79	14·22	10·48
1·59	0·62	1·47	1·42	13	7·4	10·75	6·73	1·59	14·30	9·15
0·54	0·03	0·21	0·05	12	9·3	9·35	7·60	1·68	12·92	10·63
0·92	..	0·65	0·09	9	8·4	12·95	6·60	3·46	17·78	9·40
					8·0		6·19			9·03
					8·8		7·87			12·52
0·90	0·30	0·07	0·95	10	9·6	13·19	8·13	3·59	18·55	11·21
0·53	0·05	0·08	1·00	12	10·1	10·93	8·28	2·18	15·13	11·87
2·02	0·37	2·05	..	9	(*n*)	11·39	(*n*)	2·16	14·37	(*n*)
0·50	1·41	0·31	1·77	8	(*n*)	7·68	(*n*)	1·77	..	(*n*)
0·50	0·20	2·02	0·09	16	12·4	18·23	11·07	3·12	23·77	16·16
0·82	0·22	0·22	..	14	13·7	11·58	14·61	3·05	17·47	22·37
0·45	0·62	0·20	0·09	15	13·7	12·32	11·88	1·60	20·18	17·45
0·70	0·15	0·55	..	16	10·5	9·93	9·50	2·58	15·05	14·02
					16·2		19·60			30·89
0·48	0·46	0·86	0·53	19	15·6	18·77	15·20	3·42	28·52	23·28
					15·3		16·74			26·63
0·38	2·96	1·46	1·36	23	12·5	23·80	10·79	4·32	29·54	15·63
0·72	0·10	0·84	0·02	17	14·3	11·26	8·70	1·68	20·37	14·39
0·33	0·54	0·78	..	14	11·2	8·91	5·53	2·70	12·99	9·95
0·17	0·30	2·60	0·10	18	14·9	18·79	9·16	3·28	31·42	15·29
0·55	0·39	1·49	0·13	21	14·7	18·08	11·81	2·71	24·32	17·67
0·28	0·73	0·47	0·04	16	16·2	10·99	8·94	1·75	17·05	16·09
3·00	1·90	..	4·14	12	10·8	15·91	9·81	4·14	21·05	13·99
2·08	1·52	..	0·41	11	11·7	11·22	10·93	2·08	16·10	15·15
1·90	..	0·55	..	11	9·3	8·37	9·90	1·90	11·33	13·69
2·98	1·40	0·11	2·50	16	13·0	18·31	13·66	3·15	28·80	19·62
3·90	2·11	..	..	6	8·0	8·57	8·33	3·90	11·51	12·15
0·14	0·18	0·01	0·24	14	10·5	12·20	9·63	5·04	18·41	13·74
6·06	2·07	0·09	2·95	13	12·7	21·07	12·98	6·06	29·02	18·23
3·00	0·94	2·23	0·06	13	11·0	15·99	10·54	3·00	18·74	15·39
0·10	..	0·08	0·82	11	10·5	10·43	9·58	3·07	14·56	12·88
3·00	0·21	..	0·30	13	9·7	9·33	7·58	3·00	13·05	11·07
..	..	0·24	..	11	9·9	10·62	8·94	3·48	12·77	12·59
2·56	0·28	..	1·23	11	9·9	10·43	8·50	2·56	12·74	12·01
0·80	..	0·42	..	12	7·9	7·44	7·28	1·52	9·61	10·32
1·10	..	..	..	4	7·4	3·11	5·16	1·10	..	7·83
..	..	2·45	..	8	(*n*)	13·37	(*n*)	2·47	..	(*n*)
2·30	0·09	..	0·59	11	(*n*)	7·98	(*n*)	2·30	10·32	(*n*)
0·21	..	..	..	12	9·4	10·78	6·40	2·94	11·47	11·03
3·51	0·21	..	2·18	12	9·2	13·77	7·46	3·51	15·20	11·93
4·60	0·04	..	0·57	12	10·2	12·76	7·88	4·60	15·74	12·52
2·16	0·15	..	1·05	12	7·2	8·78	6·35	2·16	12·01	9·51
1·14	0·11	0·05	0·69	7	5·8	5·00	4·50	1·14	6·30	6·32
0·40	..	..	1·66	6	6·0	5·75	4·82	2·00	6·26	6·54
..	..	0·62	..	6	5·9	3·86	4·36	0·95	4·97	6·18
1·05	0·32	..	..	4	6·5	2·56	5·01	1·05	3·42	6·75
0·96	0·18	..	0·46	8	6·4	4·48	4·41	1·00	5·12	6·51
0·10	0·07	0·67	..	9	5·9	5·84	4·64	2·98	6·09	7·05
8·23	0·05	..	2 02	12	11·2	22·31	9·78	8·23	29·96	18·33
4·80	0·10	..	..	12	11·2	15·83	9·75	4·80	21·02	17·74
4·37	0·30	..	0·04	14	8·5	13·03	8·27	4·37	20·47	18·40
4·18	0·10	..	0·74	14	11·0	15·72	9·41	4·20	22·03	17·58
..	..	..	..	9	10·5	13·85	9·87	4·25	18·64	20·54
3·30	0·25	..	..	9	10·8	11·50	9·15	3·30	14·71	15·33
0·41	..	..	..	14	11·2	16·37	9·76	4·45	20·85	17·76
..	5·70	0·15	..	13	9·2	18·44	8·16	5·70	21·38	16·39

(*n*) Not ascertained.

DAILY RAINFALL RECORDED IN BENGAL

Division and district.	Station.	1	2	3	4	5	6	7
Dacca —*concld.*								
Mymensingh ..	Kishorganj	0·03	0·01	..	0·78	0·11	0·66	0·22
	Atia (Tangail)	..	..	0·15	..	0·20	0·05	1·28
	Sarisabari	0·33	..	0·40	..	0·83	1·43	0·55
	Mymensingh (Obsy.) ..	0·37	0·12	0·20	2·92	0·62	1·65	0·80
	Jamalpur	..	0·34	0·04	1·53	0·27	4·21	3·43
	Netrokona	..	..	1·36	1·40	0·65	1·05	1·32
	Pingna	..	0·28	..	1·44	..	1·00	1·00
	Durgapur	1·15	1·42	3·95	1·55	1·86	1·50	..
	Sherpur (Town)	..	0·56	0·25	1·49	..	1·73	1·52
	Dewanganj	0·15	1·57	0·72	0·07	0·52	3·61	0·19
	Nalitabari	..	..	2·55	2·08	1·92	0·50	3·00
Faridpur ..	Madaripur	..	..	0·06	..	..	..	..
	Faridpur (Obsy.)	..	0·32	..	..	..	..	0·01
	Rajbari (Goalundo) ..	..	0·77	..	..	..	..	0·05
	Haridaspur	..	..	..	..	..	..	1·07
	Takerhat	..	..	..	..	..	..	1·39
	Bhanga	..	..	..	..	..	..	2·60
	Pangsa	0·50	..	..	0·06	..	..	1·00
	Baliakandi	..	0·52	..	..	..	..	..
	Bhusna	..	..	..	..	..	..	..
	Palong	..	..	..	..	..	..	..
Bakarganj ..	Patuakhali	..	..	..	..	..	..	..
	Barguna	..	..	..	..	..	..	..
	Pirojpur	..	..	..	..	..	..	..
	Barisal (Obsy.)	..	..	..	..	..	..	..
	Gaurnadi	..	..	..	..	..	..	1·40
	Bhola	..	..	..	..	..	0·24	..
	Daulatkhan	..	..	..	..	..	..	..
	Bauphal	..	..	..	..	..	..	0·47
Chittagong.								
Chittagong ..	Cox's Bazar (Obsy.) ..	..	..	..	..	..	..	..
	Chittagong (Obsy.) ..	..	..	..	..	..	0·02	..
	Kutubdia	..	..	..	..	..	..	..
	Satkania	..	..	..	..	..	..	..
	Mirsarai	..	..	0·80	..	..	..	1·00
	Rangunia*							
Tippera ..	Comilla (Obsy.)	..	0·40	0·36	..	..	1·00	0·43
	Chandpur	..	0·24	..	..	..	0·02	0·29
	Brahmanbaria	..	0·70	0·50	0·95	..	1·05	..
	Ramchandrapur	..	0·25	0·50	..	..	0·25	0·35
	Nasirnagar	..	0·60	0·25	..	0·40	..	0·70
	Daudkandi	..	..	..	..	..	..	..
	Kasba	1·70	..	0·65	..	1·50	..	2·30
	Laksam	..	..	0·08	..	0·19	..	3·07
Noakhali ..	Noakhali (Obsy.)	..	..	..	..	..	0·79	..
	Feni	..	..	..	..	..	..	..
	Harishpur	..	..	..	..	0·15	..	1·14
	Ramganj	..	..	0·03	..	..	..	0·75
	Chhagalnaya	0·02	0·02	..	..	0·45	..	2·35
	Hatiya	..	..	..	..	..	..	..
	Lakhmipur	..	..	..	..	..	..	..
Chittagong Hill Tracts.	Rangamati	..	..	..	..	..	..	..
	Bandarban	..	..	..	..	..	..	..
	Barkal	..	..	..	..	..	..	..
	Mahalchari	..	..	..	0·17	..	1·12	..
	Lama	..	..	..	..	..	..	..
	Ramgarh	0·02	..	0·63	..	..	..	1·19
	Manikseri	..	..	0·16	..	0·73	..	1·67
	Dighinala	..	..	..	1·65	0·90	0·60	..
	Mainmukh	..	1·40	..	..	..	..	0·86
	Kaptai	..	..	..	..	..	..	..
	Panchhari	..	0·29	1·02	..	1·35	0·77	..
	Nakhyongchhari	..	..	..	..	..	..	..
Tripura State ..	Agartala	0·25	..	..	..	1·40	0·61	1·51
Cooch-Behar ..	Dinhata	..	0·16	0·55	1·72	2·02	0·08	0·81
	Cooch-Behar (Obsy.) ..	0·03	1·05	0·21	0·22	0·72	0·05	0·64
	Mekliganj	..	0·20	..	0·12	0·30	0·16	1·30
	Mathabhanga	..	0·43	0·03	0·28	0·22	0·06	1·42
	Fulbaria (Tufanganj) ..	0·21	1·02	0·13	0·26	0·86	..	0·30

*Not reported.

FOR THE MONTH OF MAY 1936.

8	9	10	11	12	13	14	15	16	17	18	19	20
0·40	..	0·58	1·35	0·76	0·32	..	..	..	..	..	..	0·09
..	..	1·06	..	..	..	..	..	..	..	..	0·16	..
0·15	..	0·90	1·62	..	..	..	..	..	..	..	..	..
0·39	0·09	..	2·31	0·05	0·53	..	..	..	..	..	..	..
0·42	0·30	..	1·28	0·05	..	..	..	..	..	..	0·05	..
0·32	0·14	0·94	1·27	..	0·40	..	..	0·11	..	0·02	..	..
0·41	..	0·04	1·18	0·08	3·09	..	..	..	..	0·17	..	..
..	1·26	0·38	..	..	..	..	0·50	..	..	..	..	..
0·32	0·48	..	1·46	0·41	..	..	..	0·31	..	..	..	..
..	..	0·68	..	0·02	..	..	..	..	..	..	..	..
0·25	..	..	1·38	..	..	..	..	..	..	..	..	..
1·10	..	..	..	0·05	2·11	..	..	5·01	2·38	0·23	..	0·23
1·31	..	..	0·46	..	..	..	..	5·06	0·70	0·39	..	0·10
1·20	..	..	0·37	0·09	..	..	..	1·12	0·11	0·21	..	0·15
..	0·01	..	2·01	2·10	..	..	0·37	0·56	0·60	..	0·26	0·02
..	..	0·14	0·72	0·24	..	..	1·98	2·00	0·71	1·22	0·13	..
..	..	0·05	1·04	..	0·09	0·13	2·05	3·30	..	0·79	0·11	..
..	0·14	0·80	..	0·13	..	..	0·15	0·72	0·08	..	..	0·19
0·95	..	0·21	0·45	0·02	0·02	..	..	0·80	0·14	0·32	0·01	..
2·90	0·05	0·15	0·10	..	..	..	0·05	0·78	..	0·02	..	0·75
1·20	..	..	..	..	1·24	..	..	4·35	0·50	2·30	1·00	0·26
2·42	..	..	0·27	0·18	3·35	..	0·02	1·33	2·72	..	0·53	..
0·30	..	..	..	..	0·30	..	..	4·00	1·80	1·13	1·15	1·20
2·32	..	..	0·71	1·55	1·11	..	..	2·50	1·39	..	2·14	0·03
2·74	..	..	..	1·03	1·42	..	0·34	0·20	2·40	0·42	0·09	..
..	..	..	..	0·23	..	..	2·25	..	1·13	0·63	..	..
2·76	..	..	..	0·03	1·98	..	0·05	..	3·57	0·30	0·08	0·75
2·08	..	..	..	0·35	0·53	..	0·21	0·54	3·65	1·46	1·16	0·04
..	..	0·37	..	1·42	..	1·07	0·08	0·36	..	2·01	1·07	..
..	..	..	..	1·26	0·30	1·77	0·32	1·12	0·96	0·62	0·25	0·90
0·05	..	..	0·06	..	2·36	0·42	3·07	0·31	0·59	2·83	0·15	..
..	..	..	..	..	..	2·15	3·05	2·80	2·95	..	..	0·58
..	..	..	..	0·25	..	..	1·30	2·45	1·17	0·31	..	..
..	..	0·30	..	1·69	..	1·50	..	0·72	2·06	..	..	..
0·88	..	..	1·22	0·03	0·50	..	0·12	0·04	0·17	1·22	..	..
0·96	..	..	0·06	0·05	2·51	..	2·92	2·83	0·10	1·96	..	0·60
0·74	..	..	2·70	0·05	..	..	2·93	0·15	..	..	0·26	..
2·55	..	..	1·05	0·65	1·35	..	..	0·65	0·25	..	..	..
..	..	..	1·50	0·72	..	..	..	....	..	..	..	..
1·60	..	..	0·52	..	..	..	..	..	..	..	..	..
..	..	1·60	0·90	1·03	..	0·80	0·49	..	1·65	..	0·16	..
..	..	0·67	..	0·40	2·18	..	..	....	0·18	..	..	..
1·10	..	..	..	0·20	1·62	..	0·69	1·52	1·29	1·35	0·47	0·08
3·51	..	..	0·72	..	0·82	..	0·80	..	0·70	0·20	0·22	0·08
..	..	..	0·28	2·05	1·10	2·55	0·36	0·45	2·12	0·76	0·55	..
..	..	0·04	..	1·58	..	0·56	1·18	0·48	..	..	..	..
..	..	0·80	1·80	0·40	..	0·65	..	0·65	0·10	..	..	..
..	..	..	..	2·15	2·34	4·34	0·63	0·60	..	3·77	2·82	..
2·00	..	..	0·20	2·00	..	..	0·60	3·00	1·55	2·05	..	..
0·81	..	..	0·89	0·84	1·70	0·32	4·15	0·11	0·81	0·12	0·50	0·40
..	..	..	0·70	0·50	0·65	0·25	0·50	2·27	0·15	0·25	0·10	0·08
..	..	..	1·35	0·03	1·26	0·10	1·40	0·91	1·40	0·04	1·50	0·70
0·79	..	..	0·39	0·75	2·69	0·13	2·90	0·57	0·25	0·14	1·15	0·12
..	..	0·52	..	0·54	1·47	0·75	0·23	0·35	0·45	0·22	0·25	..
..	..	0·91	0·03	0·87	0·43	1·90	0·30	0·42	0·45	0·15	0·11	..
..	..	0·80	..	1·26	0·86	3·60	0·34	0·66	0·77	3·70	0·08	..
1·34	..	..	0·39	0·20	0·27	0·05	1·31	0·01	0·28	0·25	1·99	0·65
..	..	1·90	0·02	1·30	0·17	6·35	0·30	0·34	0·06	1·80	0·29	..
..	..	0·74	0·34	1·00	0·47	1·60	0·64	0·25	0·27	0·02	0·60	..
1·15	..	..	2·11	0·75	0·41	..	1·55	..	0·28	0·09	1·65	..
..	..	..	..	0·40	1·43	0·55	1·53	0·55	0·30	0·35	0·64	0·05
..	..	2·60	..	0·58	....	....	..	5·10	..	..	0·64	0·16
0·14	0·25	0·50	0·01	..	..	..	..	..	..	..	..	..
..	0·59	0·85	..	..	....	..	..	..	..	..	..	..
0·08	1·72	2·92	..	..	..	..	..	0·02	0·42	..	0·15	..
0·09	0·99	0·83	0·02	..	..	..	..	..	0·09	..	..	..
0·01	0·31	1·22	..	..	..	..	..	..	0·12	..	..	..

DAILY RAINFALL RECORDED IN BENGAL

Division and district.	Station.	21	22	23	24	25	26	27
Dacca --*concld.*								
Mymensingh ..	Kishoreganj	..	..	0·14	..	0·15	0·55	1·08
	Atia (Tangail)	..	..	..	..	..	1·50	5·41
	Sarisabari	..	..	..	..	..	0·70	3·72
	Mymensingh (Obsy.) ..	..	..	0·04	0·06	..	1·44	0·44
	Jamalpur	..	0·04	..	..	..	0·19	0·40
	Netrokona	..	..	..	..	..	0·83	0·92
	Pingna	..	..	..	0·06	0·04	..	1·13
	Durgapur	..	..	..	..	1·08	0·86	4·08
	Sherpur (Town)	..	..	..	..	..	3·29	0·60
	Dewanganj	..	..	..	..	2·26	0·26	3·30
	Nalitabari	..	..	..	..	..	0·80	0·26
Faridpur ..	Madaripur	0·05	..	..	2·28	..	0·24	2·05
	Faridpur (Obsy.)	0·16	..	..	..	..	0·02	1·07
	Rajbari (Goalundo) ..	0·14	..	..	0·05	..	..	0·79
	Haridaspur	..	..	..	0·10	0·85	0·75	4·31
	Takerhat	..	..	0·31	..	0·08	2·81	4·71
	Bhanga	..	..	..	..	0·18	1·85	5·45
	Pangsa	..	..	..	0·61	..	1·00	5·70
	Baliakandi	0·29	..	..	0·11	0·28	0·09	1·05
	Bhusna[1]	..	..	..	1·02	..	..	2·10
	Palong	..	..	..	..	..	0·30	1·25
Bakarganj ..	Patuakhali	..	..	..	0·18	0·08	1·33	1·83
	Barguna	..	1·50	..	0·30	..	3·05	2·15
	Pirojpur	..	..	..	0·25	0·83	3·03	1·34
	Barisal (Obsy.)	..	..	..	0·58	..	0·33	2·15
	Gaurnadi	..	..	..	0·34	0·23	1·12	3·66
	Bhola	..	..	..	0·55	0·13	1·25	1·60
	Daulatkhan	..	..	..	0·25	0·50	1·58	1·45
	Bauphal ..	1·04	..	0·19	..	..	1·31	3·42
Chittagong.								
Chittagong ..	Cox's Bazar (Obsy.) ..	..	..	..	..	..	1·67	2·20
	Chittagong (Obsy.) ..	..	..	..	0·02	0·35	0·97	0·86
	Kutubdia	..	..	..	0·10	..	2·75	1·28
	Satkania	..	0·45	0·23	1·55	0·77	0·56	..
	Mirsarai	..	..	..	..	2·90	0·59	1·50
	Rangunia* ..							
Tippera ..	Comilla (Obsy.)	..	..	..	..	0·18	0·23	0·61
	Chandpur	..	..	..	..	..	0·81	2·15
	Brahmanbaria	..	..	..	2·15	..	..	0·37
	Ramchandrapur	0·40	..	0·80	..	0·35	..	2·45
	Nasirnagar	..	..	..	0·50	..	0·40	4·80
	Daudkandi	..	..	..	..	..	1·10	3·50
	Kaaba	..	0·60	..	1·30	1·42	1·15	1·05
	Laksam	..	..	..	..	1·12	0·20	3·37
Noakhali ..	Noakhali (Obsy.) ..	..	..	..	0·11	..	..	1·55
	Feni	..	..	..	..	..	..	0·90
	Harishpur	..	..	..	..	..	1·32	1·22
	Ramganj	..	0·58	..	0·70	..	0·78	4·90
	Chhagalnaya	..	..	..	..	..	1·25	0·50
	Hatiya	..	..	..	..	0·46	1·35	6·10
	Lakhmipur	..	..	0·90	..	..	..	2·10
Chittagong Hill Tracts	Rangamati	..	0·36	..	..	..	0·37	0·15
	Bandarban	..	..	..	3·25	0·65	0·62	0·30
	Barkal	..	..	..	0·34	0·20	1·19	..
	Mahalchari	..	..	..	..	0·11	2·65	0·13
	Lama	..	0·24	0·25	0·23	0·76	0·85	2·76
	Ramgarh	..	..	0·51	0·05	0·09	..	1·23
	Manikseri	0·17	..	..	0·10	0·15	0·14	2·20
	Dighinala	..	..	..	..	0·67	2·55	0·06
	Mainmukh	..	..	..	..	1·80	0·12	1·85
	Kaptai	0·34	..	1·75	0·40	0·86	0·70	1·52
	Panchhari	..	..	..	..	1·30	0·72	..
	Nakhyongchari	..	..	..	..	..	1·46	1·55
Tripura State ..	Agartala	..	..	..	2·62	0·15	1·02	1·22
Cooch-Behar ..	Dinhata	..	0·05	0·27	..	0·42	0·44	0·65
	Cooch Behar (Obsy.) ..	..	..	1·50	2·26	0·21	..	1·86
	Mekligunj	..	..	0·13	2·22	1·03	..	1·82
	Mathabhanga	..	..	0·38	1·28	1·41	..	1·93
	Fulbaria (Tufanganj) ..	..	0·10	0·95	1·19	..	..	2·62

*Not reported.

Dacca, the 17th June 1936.

FOR THE MONTH OF MAY 1936.

28	29	30	31	Number of rainy days.	Average number of rainy days.	Total rainfall for the month.	Normal rainfall for the month.	Heaviest rainfall during the month.	Total rainfall from 1st March to 31st May 1936.	Normal rainfall from 1st March to 31st May 1936.
6·07	0·82	..	..	15	12·3	14·12	12·02	6·07	18·86	20·05
0·21	..	0·16	..	9	10·3	10·18	8·32	5·41	12·76	13·24
1·60	..	0·30	..	12	8·7	12·53	8·48	3·72	15·02	13·16
5·02	2·81	..	0·20	15	13·1	20·06	12·54	5·02	27·24	20·38
0·90	1·59	..	..	12	11·2	15·04	9·66	4·21	21·17	14·52
5·50	2·47	..	0·41	16	13·6	19·11	13·91	5·50	31·50	22·42
4·50	0·64	..	0·48	12	8·2	15·54	7·93	4·50	18·52	11·98
7·10	..	0·14	0·06	14	13·3	26·89	15·84	7·10	37·79	23·52
4·92	4·46	..	0·19	15	11·6	21·99	10·60	4·92	27·47	16·67
2·55	..	0·39	..	12	10·9	16·29	11·38	3·61	25·24	16·65
3·51	6·59	..	0·57	12	11·8	23·41	11·94	6·59	32·31	18·69
4·84	0·03	..	..	10	10·1	20·66	8·71	5·01	22·18	15·59
4·78	0·15	..	..	11	11·0	14·53	9·04	5·06	18·95	16·09
5·23	0·18	..	0·05	11	10·1	10·51	8·29	5·23	14·41	14·50
..	0·19	0·23	..	13	9·9	13·43	8·56	4·31	16·55	15·45
0·02	0·11	..	..	13	9·5	16·57	9·18	4·71	18·45	16·98
..	..	..	..	10	9·6	17·64	8·51	5·45	18·76	16·41
0·03	..	3·80	..	12	9·7	14·91	8·30	5·70	18·77	13·83
4·49	0·15	..	3·93	14	9·7	13·83	9·03	4·49	19·81	16·12
2·85	0·04	..	..	8	10·5	12·43	9·08	2·90	17·11	16·57
5·42	..	..	..	10	11·5	17·82	10·77	5·42	19·87	22·04
8·73	0·03	2·83	0·92	13	9·6	26·75	10·12	8·73	29·13	10·40
5·36	..	1·30	..	13	9·7	23·54	10·02	5·36	..	16·54
6·61	..	0·84	1·50	14	9·2	26·15	7·95	6·61	28·62	12·87
6·69	..	0·10	0·09	12	9·8	18·58	9·02	6·69	20·95	16·02
..	..	0·17	..	10	9·4	11·16	8·33	3·66	12·90	15·30
7·65	..	2·55	0·12	13	10·0	23·61	8·17	7·65	26·29	14·98
11·50	..	1·31	0·30	15	10·0	26·91	10·68	11·50	27·19	18·50
..	..	0·45	..	12	9·4	13·26	9·70	3·42	13·26	15·93
2·30	1·14	0·13	0·03	14	10·0	14·97	12·60	2·30	15·78	18·81
0·91	5·92	0·12	..	13	10·8	19·01	9·52	5·92	26·00	17·55
2·90	..	1·02	..	10	9·2	19·58	10·76	3·05	21·64	16·87
..	2·77	1·55	1·01	13	9·9	14·37	8·89	..	..	15·42
3·22	0·15	..	..	12	11·0 (*n*)	16·43	9·99 (*n*)	3·22	21·42	18·31 (*n*)
13·57	0·01	..	0·01	14	11·5	20·98	11·77	13·57	26·68	21·30
5·00	0·03	1·11	..	13	10·7	21·64	8·96	5·00	24·06	24·67
6·70	0·16	..	0·50	14	12·2	19·91	12·01	6·70	26·82	22·34
5·60	1·25	..	..	16	9·8	18·70	10·68	5·60	22·35	20·60
..	..	..	..	9	10·4	9·87	12·66	4·80	16·37	17·34
0·12	0·06	..	..	5	9·7	6·90	8·82	3·50	..	15·87
1·15	..	0·42	0·90	19	10·6	20·77	10·58	2·30	21·15	20·76
5·09	0·39	0·42	..	12	10·3	17·36	10·63	5·09	23·33	18·63
11·00	1·40	0·26	0·06	14	10·6	23·49	11·40	11·00	26·97	20·48
0·50	2·75	0·50	0·10	12	11·5	12·62	10·98	3·51	19·43	20·44
2·42	..	0·18	..	15	10·1	16·65	10·15	2·55	..	16·78
..	..	..	..	9	10·3	11·58	9·56	4·90	13·60	17·35
2·05	..	..	..	11	11·6	11·04	11·03	2·35	17·83	22·51
2·46	0·17	0·12	0·50	14	10·8	27·81	10·44	6·10	..	18·66
10·20	..	1·80	..	11	10·3	26·40	10·17	10·20	..	18·92
3·15	6·89	0·18	0·09	17	11·5	21·84	9·75	6·89	29·52	17·59
1·66	4·70	0·09	..	15	11·8	16·66	10·13	4·70	21·11	17·93
1·30	8·25	0·24	1·20	15	10·7	21·41	8·60	8·25	32·06	17·44
2·98	..	0·06	0·10	18	7·5	17·20	5·54	2·98	26·49	13·65
6·05	0·45	..	..	17	9·0	16·37	6·37	6·05	19·09	13·85
3·82	..	..	..	14	7·6	13·08	5·92	3·82	21·64	14·97
4·04	0·50	..	..	18	(*n*)	21·42	(*n*)	4·04	29·44	(*n*)
3·80	3·28	1·00	0·90	18	(*n*)	22·15	(*n*)	3·80	33·77	(*n*)
4·11	..	0·49	0·04	15	(*n*)	23·20	(*n*)	6·35	32·47	(*n*)
8·27	0·27	..	..	17	(*n*)	20·04	(*n*)	8·27	24·51	(*n*)
3·70	1·05	0·22	..	16	(*n*)	18·41	(*n*)	3·70	28·20	(*n*)
2·80	1·21	0·20	0·05	13	(*n*)	13·07	(*n*)	2·80	16·84	(*n*)
0·10	..	0·29	0·88	16	11·0	25·13	11·31	7·22	30·52	21·63
1·72	0·85	..	0·05	14	14·1	10·69	13·66	2·02	18·06	19·57
1·03	0·67	0·14	0·04	14	14·3	10·07	15·80	1·86	19·33	23·14
0·53	0·60	0·30	0·05	16	12·7	14·07	11·76	2·92	23·32	16·75
0·77	0·85	0·08	0·11	13	14·0	11·27	13·13	1·93	..	19·22
1·57	0·71	0·19	0·11	17	15·0	11·88	15·90	2·62	19·67	24·10

(*n*) Not ascertained.

S. ABDULLAH, for *Director of Agriculture, Bengal.*

Statement showing the gauge readings at Dacca Waterworks Station on the river Buriganga for the week ending 13th June 1936.

Date.	At highest water.		At lowest water.		Commencement of—		Remarks.	
	Time.	Reading.	Time.	Reading.	Ebb tide.	Flow tide.	7 a.m.	5 p.m.
1936.								
7th June ..	10-30	11·3	7-0	10·75	10-50	7-16	10·75	11·0
8th ,, ..	10-30	11·65	7-0	11·1	10-55	7-20	11·1	11·6
9th ,, ..	11-30	11·95	7-0	11·55	11-45	7-13	11·55	11·75
10th ,, ..	12-0	12·15	7-0	11·9	12-12	7-10	11·9	12·1
11th ,, ..	14-0	12·5	7 30	11·9	14-10	7-38	11·95	12·4
12th ,, ..	14-30	13·45	13-0	12·35	14-37	13-6	12·8	13·25
13th ,, ..	18-0	13·5	12-0	12·9	18-15	12-13	13·15	13·4

Notable high and low water-levels of previous years.

		Taken at high tide.			Taken at low tide.
27th August	1906 ..	70·5	23rd February	1907 ..	51·06
5th September	1909 ..	66·86	13th ,,	1908 ..	51·06
10th August	1910 ..	69·86	12th March	1912 ..	51·06
1st ,,	1911 ..	68·46	6th ,,	1914 ..	50·60
13th ,,	1912 ..	67·16	22nd February	1915 ..	50·30
31st ,,	1915 ..	69·7	15th ,,	1916 ..	50·60
8th ,,	1916 ..	68·1	3rd March	1917 ..	51·0
12th ,,	1917 ..	67·1	21st February	1918 ..	51·40
13th ,,	1918 ..	69·12	26th ,,	1919 ..	50·4
2nd ,,	1919 ..	66·8	18th ,,	1920 ..	50·9
8th September	1920 ..	66·9	19th ,,	1921 ..	50·9
28th July	1921 ..	68·4	8th March	1922 ..	51·05
10th August	1922 ..	68·00	14th ,,	1923 ..	50·8
31st July	1923 ..	66·15	16th February	1924 ..	50·50
29th August	1924 ..	68·82	5th March	1925 ..	50·9
8th September	1925 ..	68·52	9th February	1926 ..	2·2
15th August	1926 ..	19·6	27th ,,	1927 ..	2·10
17th September	1927 ..	18·70	16th ,,	1928 ..	2·2
22nd August	1928 ..	20·0	21st ,,	1929 ..	2·0
13th July	1929 ..	17·8	24th ,,	1930 ..	2·3
12th September	1930 ..	18·65	28th ,,	1931 ..	2·2
16th August	1931 ..	21·7	18th ,,	1932 ..	1·8
6th September	1932 ..	18·5	6th ,,	1933 ..	2·10
7th ,,	1933 ..	17·80	26th March	1934 ..	2·40
23rd August	1934 ..	19·35	15th February	1935 ..	1·70
1st September	1935 ..	19·80			

N.B.—Zero of the gauge at Dacca Waterworks prior to 11 a.m. on the 8th January 1926= —48·51 with reference to P. W. D datum.

Zero of the gauge at Dacca Waterworks since 11 a m. of the 8th January 1926=0·00 with reference to P. W. D. datum.

J. PRAMANIK, for *Executive Engineer,*
Khulna Division.

Khulna, the 24th June 1936.

Statement of weekly gauge readings on the river Ganges at Rampur Boalia for the week ending the 20th June 1936.

Date.	Hour.	Height of surface above P. W. D. datum.	Height of surface above P. W. D. datum on the same date last year.	Remarks.
1936.				Value of B.M. on Rajshahi College step = 64·73 P. W. D.
14th June	7 a.m.	42·07	39·45	Zero of gauge = 39·37 P. W. D.
15th „	7 „	42·07	39·60	
16th „	7 „	42·02	39·75	
17th „	7 „	41·97	39·75	
18th „	7 „	41·92	39·75	
19th „	7 „	41·87	39·65	
20th „	7 „	41·97	39·65	

Highest recorded level on 26-8-1879=64·24.
Lowest recorded level on 24-4-1931=32·05.

S. GUPTA, *Subdivisional Officer,*
Irrigation Department, Rajshahi.

Rampur Boalia, the 20th June 1936.

Vital statistics of towns with a population of 50,000 and over of the Bengal Presidency for the week ending Saturday, the 20th June 1936.

Districts	Nos.	Towns.	Population under registration according to census of 1931.			Births registered.		Deaths registered.																							
			Male.	Female.	Total.	Number registered (excluding still-births)	Still-births registered.	Cholera.	Small-pox.	Plague.	Cerebro-spinal meningitis.	Malaria.	Enteric fever.	Measles.	Relapsing fever (Spirochetal).	Kala-azar.	Influenza.	Other fevers.	Dysentery.	Diarrhœa.	Pneumonia.	Pulmonary Tuberculosis.	Other respiratory diseases.	Injuries including suicide.	Deaths from child-birth.	Other causes.	Total of all causes.			Total of corresponding week of the previous year.		
																										Male.	Female.	Total.	Male.	Female.	Total.
Calcutta ..	1	Calcutta ..	778,817	362,045	1,140,862	513	57	61	27	..	6	11	26	3	..	1	10	28	27	6	117	54	53	15	2	260	383	324	707	331	253	584
Burdwan ..	2	Asansol Mining Settlement.	209,544	173,136	382,680	106	2	1	3	..	..	..	1	..	..	..	..	19	1	2	3	..	1	3	1	34	34	35	69	99	85	184
Howrah ..	3	Howrah ..	145,120	79,753	224,873	129	6	14	5	..	..	..	1	2	..	1	..	..	5	7	14	7	21	..	1	42	71	49	120	61	53	114
Dacca ..	4	Dacca ..	79,365	59,153	138,518	45	1	..	..	..	..	1	..	1	..	..	..	..	2	3	5	3	10	3	..	11	26	13	39	22	22	44
24 Parganas	5	Bhatpara ..	60,134	24,841	84,975	20	4	3	2	..	..	..	1	..	..	..	..	5	..	..	1	..	..	..	..	5	11	6	17	9	8	17
	6	Garden Reach.	36,131	19,741	55,872	13	..	1	1	..	..	2	..	..	..	..	..	2	2	2	1	2	..	..	..	3	10	6	16	..	..	..
Chittagong.	7	Chittagong	35,049	18,107	53,156	20	1	1	..	..	..	..	..	..	..	4	..	2	5	..	2	..	1	3	1	9	19	9	28	13	7	20

A. C. CHATTERJI, M.B., D.P.H., MAJOR, I.M.S., *Director of Public Health, Bengal.*

Calcutta, the 26th June 1936.

DISTRICT REPORTS ON WEATHER AND CROPS.

For the week ending on the 24th June 1936.

Summary.—Excepting heavy showers in places the rainfall was generally light to moderate. Preparation of lands for winter rice continues favourably. Sowing of autumn crops is still proceeding in places; prospects, so far, are satisfactory on the whole. During the week ending Saturday, the 20th June, daily average of labourers attending test relief works and the number of persons receiving gratuitous relief were 6,527 and 3,659, respectively, in the distressed areas of Murshidabad. In 24-Parganas and Burdwan, 2,465 and 5,250 persons were employed on test relief works on Saturday, the 20th June. In Burdwan and Nadia, 1,100 and 491 persons also received gratuitous relief. In Hooghly and Birbhum, 14,940 and 8,325 labourers, respectively, were engaged on test relief works during the week ending Saturday, the 20th idem. Test relief works have been closed in Nadia and suspended in Khulna. The average price of common rice for the province has risen by about 0·10 per cent. as compared with that of the previous week.

Serial No.	District and subdivision.	Rainfall.	Price of common rice, in seers, per rupee.		Character of the weather, condition of crops, etc.
			This week.	Previous week.	
1	2	3	4	5	6
		Inches.			
1	24-Parganas ..	1·12	9 3/16	9¼	Weather seasonable. Fodder and water are sufficient. Prospects of crops are fair. Cattle-disease is reported from Hasnabad and Habra police-stations. Import of rice continues from East Bengal in Basirhat. 2,465 persons were engaged on test relief works and relief works in Sadar, Basirhat and Diamond Harbour on the last day of the week ending the 20th June. Agricultural loans also gratuitous relief were distributed during the week.
	Diamond Harbour..	2·33	9½	9½	
	Barrackpore ..	1·60	9	9¼	
	Baraset ..	1·30	9	9	
	Basirhat ..	0·76	11	11	
2	Nadia ..	0·80	8	8	Weather seasonable. Agricultural operation is going in full swing. Rice is being imported largely in Ranaghat. Fodder and water are sufficient. Distribution of agricultural loan is being made in Sadar, Ranaghat and Chuadanga. Gratuitous relief was given to 166, 79 and 246 persons in Sadar, Ranaghat and Meherpur subdivisions. Test relief centres have been closed.
	Kushtia ..	Nil	10	10¼	
	Meherpur ..	1·02	11	11	
	Chuadanga ..	0·94	12	12	
	Ranaghat ..	0·93	9¼	9¼	
3	Murshidabad ..	2·62	9½	9½	Weather cloudy with occasional rain. Prospects of standing crops are favourable. Fodder and water are sufficient. Cattle-disease is reported from Kandi and Lalbagh subdivisions. Rice is being imported from Dinajpur in Lalbagh subdivision. No export. Number of average daily labourers who attended the test relief centres for the week ending Saturday, the 20th June was 6,527. Number of persons receiving gratuitous relief in the distressed areas was 255, 2,557 and 847 in Lalbagh, Kandi and Jangipur subdivisions, respectively, for the week ending Saturday, the 20th June.
	Lalbagh ..	0·53	10¼	10¼	
	Jangipur ..	1·22	10¼	10¼	
	Kandi ..	1·52	9¼	9¼	
4	Jessore ..	3·54	11	11	Weather seasonable. Prospects of standing crops are fair. No large export or import. Fodder and water are sufficient.
	Jhenidah ..	0·92	13	13	
	Magura ..	1·50	13	13	
	Narail ..	1·75	12	12	
	Bongaon ..	0·08	10	10	
5	Khulna ..	0·67	10	10	Weather seasonable. Fodder and water are sufficient. Cattle-disease is reported from parts of Morrelganj and Rampal thanas. Test relief works suspended.
	Satkhira ..	1·24	10½	10	
	Bagerhat ..	0·23	8½	9	

Serial No.	District and sub-division.	Rainfall.	Price of common rice, in seers, per rupee.		Character of the weather, condition of crops, etc.
			This week.	Previous week.	
1	2	3	4	5	6
		Inches.			
6	Burdwan ..	0·13	9½	9½	Weather seasonable. Condition of crop is favourable. Fodder is sufficient. Cattle-disease is reported from places in Sadar. 5,250 labourers were engaged on test relief works on 20th June 1936. 1,100 persons received gratuitous relief.
	Asansol ..	0·26	11	11	
	Katwa ..	Nil	9	9½	
	Kalna ..	Nil	8½	8½	
7	Birbhum ..	0·01	10	10	Weather occasionally cloudy. Prospects of standing crops are favourable. Scarcity of fodder and water prevails. 8,325 persons were employed on test relief works on preceding Saturday.
	Rampurhat ..	Nil	10½	10½	
8	Bankura ..	0·06	10	10½	Weather cloudy and hot. Sowing of seeds continues. Fodder and water are sufficient. Cattle-disease exists in Mejhia, and Raipur thanas.
	Vishnupur .	Nil	8½	8½	
9	Midnapore ..	0·07	10	10	Sowing of paddy continues. Fodder and water are sufficient.
	Contai ..	0·33	8	8	
	Tamluk ..	0·62	9	9	
	Ghatal ..	2·54	11½	11½	
	Jhargram ..	0·57	10	10	
10	Hooghly ..	1·07	10	10	Weather seasonable. Fodder and water are sufficient. 14,940 labourers were employed on test relief works during week ending Saturday, the 20th June 1936.
	Serampore ..	0·71	10	9½	
	Arambagh ..	Nil	9½	10	
11	Howrah ..	1·65	10	10	Weather seasonable. Its effects are good. Fodder and water are sufficient.
	Uluberia ..	0·46	9½	9½	
12	Rajshahi (Rampur-Boalia).	1·10	9½	9½	Weather seasonable. Prospects of standing crops are favourable. Fodder and water are available.
	Naogaon ..	0·74	10½	10½	
	Nator ..	0·59	9½	9½	
13	Dinajpur ..	2·61	11	11	Weather seasonable. Fodder and water are sufficient. Cattle-disease is reported from Thakurgaon and Birganj thanas.
	Thakurgaon ..	2·81	13	12	
	Balurghat ..	0·24	11	11½	
14	Jalpaiguri ..	21·56	11½	11	Fodder and water are sufficient.
	Alipur ..	9·90	11½	11½	

Serial No.	District and sub-division.	Rainfall.	Price of common rice, in seers, per rupee.		Character of the weather, condition of crops, etc.
			This week.	Previous week.	
1	2	3	4	5	6
		Inches.			
15	Darjeeling ..	3·67	8	8	Weather seasonable. Stock of rice sufficient. Condition of crop is well. No damage. No large import and export. Fodder and water are sufficient.
	Kurseong ..	5·56	8	8	
	Siliguri ..	9·89	10	10	
	Kalimpong ..	(n)	(n)	7	
16	Rangpur ..	0·96	11	11	Weather seasonable. More rain is very urgently needed for transplantation of *aman* paddy. Prospects of standing crops are fair. No large export or import. Fodder and water are sufficient. Cattle-disease exists in Ranmari thana.
	Nilphamari ..	4·45	11½	11½	
	Kurigram ..	1·86	12	12½	
	Gaibandha ..	0·75	9	9	
17	Bogra ..	1·78	10½	10 11/16	Weather seasonable. Condition of crop is fair. Fodder and water are sufficient. Cattle-disease is reported from Jaipurhat thana.
18	Pabna ..	0·67	10½	10½	Weather seasonable. Condition of standing crops is satisfactory but heavy rain caused some damage. Weeding is going on. Fodder and water are sufficient.
	Serajganj ..	1·80	11½	11½	
19	Malda ..	0·46	10	10	Weather cloudy. Prospects of standing crops are fair. Fodder and water are available. Cattle-disease is reported from Nachole thana.
20	Cooch Behar ..	11·47	12 5/16	11 11/16	Weather seasonable. Preparation of lands for winter paddy and rearing of seedlings in nursery are in progress. Transplantation continues. Harvesting of autumn paddy has commenced in places. Prospects of standing crops are fair. Fodder and water are sufficient. Cattle-disease is reported from Sadar, Tufanganj and Mekliganj subdivisions.
21	Dacca ..	2·51	10	10½	Rainfall at North Sadar (Kapasia) 4·93. Weather seasonable. Prospects of crops appear to be fair. No large export and import. Fodder and water are sufficient.
	Manikganj ..	0·97	10½	10½	
	Narayanganj ..	3·35	12	12	
	Munshiganj ..	4·41	10½	10½	

(n) Not reported.

Serial No.	District and sub-division.	Rainfall.	Price of common rice, in seers, per rupee.		Character of the weather, condition of crops, etc.
			This week.	Previous week.	
1	2	3	4	5	6
		Inches.			
22	Mymensingh ..	3·06	10½	10½	Weather seasonable. Condition of crops is fair. Fodder and water are available.
	Jamalpur ..	1·20	10½	10½	
	Tangail ..	1·68	11	11	
	Netrakona ..	4·82	12½	12½	
	Kishorganj ..	3·03	10 11/16	10 11/16	
23	Faridpur ..	0·90	11	11	Weather seasonable. Condition of standing crops is fair. Fodder and water are sufficient.
	Goalundo (Rajbari)	0·64	10½	10½	
	Madaripur ..	1·12	11½	11½	
	Gopalganj (a) ..	4·54	12	11	
24	Bakarganj (Barisal)	0·79	10	10	Weather seasonable. Fodder and water are sufficient. Prospects of standing crops are good in Bhola and fair in Pirojpur and Patuakhali and not good in Sadar. Cattle-disease exists in places of Patuakhali and Pirojpur subdivisions.
	Pirojpur ..	0·79	9½	9½	
	Patuakhali ..	0·57	10	10	
	Dakshin Shabazpur (Bhola).	2·00	10	10	
25	Chittagong ..	2·01	10 11*	10 12*	Transplantation of *aus* crop is almost completed and sowing of *aman* crops has commenced. Condition is fair. Fodder and water are sufficient. Cattle-disease is reported from places. Panga salt sells at 14 seers at Sadar and 12 seers at Cox's Bazar.
	Cox's Bazar ..	1·11	11	11	
26	Tippera (Comilla) ..	4·61	10	10	Condition of crop is fair.
	Brahmanbaria ..	1·23	10½	10½	
	Chandpur ..	0·97	11½	11½	
27	Noakhali ..	0·91	9½	9½	Prospects of crops are fair. Fodder and water are sufficient. Cattle-disease exists in Feni thana.
	Feni ..	0·51	10 7/10	10 7/10	
28	Chittagong Hill Tracts.	2·80	11	11	Weather seasonable. Cattle-disease still prevails.
29	Tripura State ..	(a)	(a)	10	Report not received.

(a) The rainfall at Haridaspur, which is very near to Gopalganj, is shown here.

* Burma rice.

S. ABDULLAH, for *Director of Agriculture, Bengal.*

Dacca, the 27th June 1936.

Wholesale prices-current of food grains, gur, etc., in the undermentioned marts of Bengal for the first half of June 1936.

Marts.	Paddy local (best quality).			Paddy local (common quality).			Rice local (best quality).		
	Present return.	Next preceding return.	Corresponding return of last year.	Present return.	Next preceding return.	Corresponding return of last year.	Present return.	Next preceding return.	Corresponding return of last year.
1	2	3	4	5	6	7	8	9	10
	Rs. a. p.	Rs. a. p.	Rs. a. p.	Rs. a. p.	Rs. a. p.	Rs. a. p.	Rs. a. p.	Rs. a. p.	Rs. a. p.
Calcutta	3 0 0	2 14 0	2 9 0	2 12 0	2 10 0	2 7 6	5 8 0	5 0 0	5 12 0
Burdwan	2 8 0	2 8 0	2 0 0	2 6 0	2 6 0	1 14 0	4 8 0	4 8 0	4 8 0
Midnapore	2 10 0	2 8 0	2 2 0	2 3 0	2 3 0	1 14 0	4 12 0	4 10 0	4 4 0
Chittagong	1 15 0	1 15 0	1 14 0	1 14 6	1 14 6	1 10 0	4 8 0	4 8 0	5 0 0
Dacca	2 8 0	2 8 0	2 8 0	2 3 6	2 4 0	2 4 0	4 4 0	4 4 0	4 4 0
Pabna	2 4 0	2 4 0	2 5 6	2 0 0	2 0 0	2 1 0	4 10 0	4 10 0	5 0 0
Rangpur	1 14 0	1 14 0	1 12 0	1 10 0	1 10 0	1 10 0	4 8 0	4 8 0	5 0 0
Serajganj (Pabna)	..	..	..	..	..	..	..	..	..
Sarisabari (Mymensingh) ..	..	..	..	..	..	..	..	..	..
Narayanganj (Dacca)	..	..	..	..	..	..	..	..	..

Marts.	Rice local (common quality).			Wheat.			Raw cotton.		
	Present return.	Next preceding return.	Corresponding return of last year.	Present return.	Next preceding return.	Corresponding return of last year.	Present return.	Next preceding return.	Corresponding return of last year.
	11	12	13	14	15	16	17	18	19
	Rs. a. p.	Rs. a. p.	Rs. a. p.	Rs. a. p.	Rs. a. p.	Rs. a. p.	Rs. a. p.	Rs. a. p.	Rs. a. p.
Calcutta	4 14 0	4 10 0	4 8 0	3 4 6	3 4 0	3 4 0	21 0 0	19 12 0	17 8 0
Burdwan	4 2 0	4 0 0	3 8 0	..	..	..	..	..	..
Midnapore	3 12 0	3 12 0	3 5 6	..	..	..	..	..	..
Chittagong	3 10 0	3 10 0	3 12 0	..	..	..	..	..	..
Dacca	3 10 0	3 7 0	3 14 0	..	..	..	..	..	..
Pabna	3 12 0	3 13 0	3 12 0	..	..	..	..	..	..
Rangpur	4 0 0	3 12 0	3 12 0	..	..	..	..	..	..
Serajganj (Pabna)	..	..	..	..	..	..	..	..	..
Sarisabari (Mymensingh) ..	..	..	..	..	..	..	..	..	..
Narayanganj (Dacca)	..	..	..	..	..	..	..	..	..

Marts.	Coal.			Raw jute (weighted average).			*Gur* (sugarcane).		
	Present return.	Next preceding return.	Corresponding return of last year.	Present return.	Next preceding return.	Corresponding return of last year.	Present return.	Next preceding return.	Corresponding return of last year.
	20	21	22	23	24	25	26	27	28
	Rs. a. p.	Rs. a. p.	Rs. a. p.	Rs. a. p.	Rs. a. p.	Rs. a. p.	Rs. a. p.	Rs. a. p.	Rs. a. p.
Calcutta	0 6 6	0 6 6	0 6 6	5 8 0	5 12 0	5 14 0	3 0 0	3 4 0	4 8 0
Burdwan	..	..	..	..	..	..	4 8 0	4 6 0	4 8 0
Midnapore	..	..	..	..	..	..	4 0 0	4 0 0	4 8 0
Chittagong	..	..	..	..	..	..	3 12 0	3 12 0	5 8 0
Dacca	..	..	..	..	..	..	3 14 0	4 0 0	5 0 0
Pabna	..	..	..	..	..	..	2 6 0	2 6 0	4 0 0
Rangpur	..	..	..	..	..	..	2 8 0 to 3 0 0	2 8 0 to 3 0 0	3 0 0 to 3 8 0
Serajganj (Pabna)	..	..	..	5 0 0	5 0 0	5 2 0	..	..	..
Sarisabari (Mymensingh) ..	..	..	..	3 8 0 to 5 12 0	3 12 0 to 6 4 0	4 4 0 to 6 4 0	..	..	..
Narayanganj (Dacca)	..	..	..	4 0 0 to 4 8 0	4 8 0 to 5 4 0	5 0 0 to 5 8 0	..	..	..

Dacca, the 26th June 1936.

S. ABDULLAH, for *Director of Agriculture, Bengal.*

Prices-current (retail) of common rice and salt in the districts of Bengal for the first half of June 1936.

Districts and Marts.	Quantity per rupee in seers of eighty tolas.								
	Common rice.						Salt.		
	Average.			Cheapest.					
	Present return.	Next preceding return.	Corresponding return of last year.	Present return.	Next preceding return.	Corresponding return of last year.	Present return.	Next preceding return.	Corresponding return of last year.
	S. Ch.	S. Ch.	S. Ch.	S. Ch.	S. Ch.	S. Ch.	S. Ch.	S. Ch.	S. Ch.
Presidency Division.									
24-Parganas—									
1 Chetla Hat ..	9 11	9 12	10 3	11 6	11 4	11 7	17 8C	18 0Ps	17 5
2 Mogra Hat ..	9 13	9 6	10 10	10 9	10 5	11 6	16 0C 16 0K	16 0C 15 0K	16 0
3 Calcutta-Beliaghata ..	8 7	8 8	8 12	10 0	10 8	11 8	18 0C 16 4K 15 0P	18 0C 16 4K 15 0P	16 0
Nadia—									
4 Goari	8 0	8 14	9 6	11 7	11 7	10 12	14 0P 14 0K	14 0P 14 0K	14 0†
5 Ranaghat ..	9 8	9 12	9 4	11 12	12 0	12 8	14 0P 14 0K	14 0P 14 0K	14 0†
Murshidabad—									
6 Berhampore ..	9 8	9 8	9 8	10 0	10 0	10 0	14 0K	14 0K	14 0
7 Kandi	9 8	10 0	10 8	9 12	10 4	11 0	14 0K 14 0B	14 0K 14 0B	14 0
8 Jangipur ..	10 0	10 0	10 0	10 4	10 4	10 4	15 0K	15 0K	15 0
Jessore—									
9 Sadar	11 0	11 0	11 0	12 0	12 0	12 0	15 0P 15 0K	15 8P 15 8K	15 0 14 0
10 Bongaon ..	10 0	10 0	10 0	12 8	12 8	12 8	14 8P 15 0K	14 8P 15 0K	14 8 13 0
Khulna—									
11 Sadar	9 8	9 8	11 0	11 8	11 8	12 0	16 0C 16 0K	16 0C 16 0K	14 0 13 0
12 Bagerhat ..	9 0	9 8	12 0	10 8	11 0	12 8	15 0K	15 0K	14 0
Burdwan Division.									
Burdwan—									
13 Sadar	9 4	9 8	11 8	9 8	9 12	11 0	13 0C 13 0K	13 0C 13 0K	16 0†
14 Kalna	8 8	8 8	9 6	12 0 (R)	12 6 (R)	9 12	17 0P	16 0P	16 0
Birbhum—									
15 Suri	10 0	10 0	11 0	10 8	10 8	11 8	14 0M	14 0M	14 0
16 Rampurhat ..	10 8	10 0	10 4	11 0	10 8	11 4	16 0C	16 0C	16 0
Bankura—									
17 Sadar	10 0	10 0	10 8	11 0	11 0	11 8	14 0P	14 0P	13 0
18 Vishnupur ..	9 0	9 8	10 0	10 0	10 0	11 0	13 0P	13 0P	14 0

P—Panga. R—Rangoon rice. K—Karkach. B—Bombay. C—Crushed.

N.B.—The prices of Karkach and Liverpool salt tally with each other in marts marked †.

Ps—Peshwari. M—Madras.

Prices-current (retail) of common rice and salt in the districts of Bengal for the first half of June 1936.

Districts and Marts.	Quantity per rupee in seers of eighty tolas.								
	Common rice.						Salt.		
	Average.			Cheapest.					
	Present return.	Next preceding return.	Corresponding return of last year.	Present return.	Next preceding return.	Corresponding return of last year.	Present return.	Next preceding return.	Corresponding return of last year.
	S. Ch.	S. Ch.	S. Ch.	S. Ch.	S. Ch.	S. Ch.	S. Ch.	S. Ch.	S. Ch.
Burdwan Division— *contd.*									
Midnapore—									
19 Sadar	11 0	11 0	9 10	11 11	11 11	12 6	14 0L 14 0K	14 0L	14 0
20 Contai	8 0	8 0	12 0	9 0	9 0	13 0	13 0C	17 0C	21 0
Hooghly—									
21 Sadar	9 11	10 0	10 8	11 4	11 8	11 4	16 0P	16 0P	15 0
22 Arambagh ..	10 0	10 0	11 4	10 8	10 8	11 8	14 8P 14 0K	14 8P 14 0K	14 12 14 8
Howrah—									
23 Sadar	9 8	8 8	10 0	11 8	10 8	11 0	17 0C 15 0K	14 0C 13 0K	16 0
24 Uluberia ..	9 8	9 8	11 0	10 0	10 8	12 8	16 0C 14 0K	16 0C 14 0K	16 0
Rajshahi Division.									
Rajshahi—									
25 Rampur-Boalia ..	9 12	9 12	10 0	10 0	10 0	11 0	12 0C 12 0K	12 0C 12 0K	13 1†
26 Nator	9 12	9 12	10 2	10 8	11 4	10 14	12 0C 12 0K	12 0C 12 0K	12 0†
27 Dinajpur—Railbazar Hat.	9 8	10 0	12 0	10 0	11 0	13 3	10 0K	10 0K	14 0†
28 Jalpaiguri—Sadar ..	9 8	9 8	10 0	11 0	11 0	12 0	13 0C	13 0C	13 0
Darjeeling—									
29 Sadar	9 0	9 0	8 8	9 8	9 8	10 0	10 0C 9 0K	10 0P 9 0K	10 8 9 0
30 Siliguri ..	10 0	10 0	10 8	11 0	11 0	11 0	13 0C 12 0K 12 0C	13 0P 12 0K 12 0C	12 0†
Rangpur—									
31 Sadar	11 4	11 13	11 4	11 4	11 13	11 4	13 8P	13 8P	14 12
32 Nilphamari ..	11 8	12 0	10 8	12 8	13 0	13 0	12 8K	12 8K	12 8
33 Bogra—Sadar ..	10 11	10 8	12 0	11 0	11 0	12 6	12 0C	12 0C	15 0
Pabna—									
34 Sadar	10 8	10 8	10 0	11 8	11 8	11 0	14 0L 14 0K	14 0L 14 0K	13 0 13 4
35 Serajganj ..	10 12	10 12	10 12	11 4	11 4	11 0	16 0L 15 0K	16 0L 15 0K	16 9 15 0
Malda—									
36 Sadar	10 8	10 4	11 0	11 8	11 0	11 8	14 8C 14 0K	14 8C 14 0K	14 8 14 0
37 Balia—Nawabganj	10 7	10 10	11 4	12 0	11 0	11 12	15 0C 14 0K	15 0C 14 0K	15 0 14 8

P—Panga. K—Karkach. C—Crushed L—Liverpool.

N. B.—The prices of Karkach and Liverpool salt tally with each other in marts marked †.

Prices-current (retail) of common rice and salt in the districts of Bengal for the first half of June 1936.

Districts and Marts.	Quantity per rupee in seers of eighty tolas.								
	Common rice.						Salt.		
	Average.			Cheapest.					
	Present return.	Next preceding return.	Corresponding return of last year.	Present return.	Next preceding return.	Corresponding return of last year.	Present return.	Next preceding return.	Corresponding return of last year.
	S. Ch.	S. Ch.	S. Ch.	S. Ch.	S. Ch.	S. Ch.	S. Ch.	S. Ch.	S. Ch.
Dacca Division.									
Dacca—									
38 Sadar	10 0	9 12	10 0	12 0	11 12	11 8	14 0C 13 0K	13 4C 13 4K	13 12†
39 Mirkadim ..	10 12	10 12	10 0	11 0	11 0	11 0	14 8K	14 8K	15 0
Mymensingh—									
40 Nasirabad ..	9 8	10 0	10 0	11 0	11 4	11 0	13 4L 13 0K	13 6L 13 0K	13 0
41 Netrakona ..	12 4	12 4	11 0	13 4	13 4	12 0	13 4L 12 4K	13 4L 12 4K	13 4 12 0
Faridpur—									
42 Sadar ..	11 0	11 0	11 0	12 0	12 0	12 0	13 0K	13 0K	12 0
43 Rajbari ..	10 8	10 8	10 0	12 8	12 8	12 0	12 0C	12 0C	12 0
Bakarganj—									
44 Barisal ..	10 0	10 0	12 0	10 8	10 8	13 0	13 5C 13 5K	13 5L 13 5K	16 0 14 0
45 Pirojpur ..	9 12	10 0	10 0	10 0	10 4	10 2	14 0C 14 0K	14 0C 14 0K	13 0†
Chittagong Division.									
Tippera—									
46 Comilla ..	10 0	10 0	10 0	10 11	10 11	10 11	14 8C	14 8C	12 13 10 10
47 Chandpur ..	10 1	10 10	10 10	11 4	11 4	11 4	16 0C	16 0C	13 5
Noakhali—									
48 Kalitara Hat ..	9 8	10 0	9 8	10 8	10 8	10 0	13 0C 10 8K	13 0C 10 8K	13 0 11 0
49 Feni Hat ..	10 0	10 0	10 12	10 10	10 14	11 8	13 0C 13 2K	13 0C 11 0K	13 4 10 0
Chittagong—									
50 Sadar	10 0	10 0	8 0	11 0	11 0	10 10	13 0P	13 0P	13 0
51 Cox's Bazar ..	9 0	10 0	9 0	11 0	12 0	10 0	13 0P	13 0P	13 0
52 Chittagong Hill Tracts —Rangamati ..	11 0	11 0	10 0	12 0	12 0	11 0	10 8L 7 0K	10 8L 7 0K	13 0 6 4

P—Panga. C—Crushed. K—Karkach. L—Liverpool.

N. B.—The prices of Karkach and Liverpool salt tally with each other in marts marked †.

Dacca, the 26th June 1936.

S. ABDULLAH, for *Director of Agriculture, Bengal.*

FORM C—BENGAL.

STATEMENT OF COTTON PRESSED IN THE BENGAL PRESIDENCY FOR THE WEEK ENDING THE 19th JUNE 1936.

[Section 5 (2) of the Cotton Ginning and Pressing Factories Act, 1925.]

Name of Division or block.	Number of bales pressed.				District included in the block.
	During the week.	During the corresponding week last year.	Since 1st September 1935 (the date prescribed by the Local Government as the commencement of the season).	During the corresponding period last year.	
The Bengal Presidency	2,095 or 2,082·77 bales of 400 lbs. each.	1,736	54,776	34,595	All districts in the Presidency.

J. B. McBRIDE,

Chief Inspector of Factories, Bengal.

DEPARTMENT OF CO-OPERATIVE SOCIETIES, BENGAL.

Finance Statements of Provincial and Central Co-operative Banks in the Presidency of Bengal for the quarter ending 31st March 1936.

NOTIFICATION.

No. 9936.—8th June 1936.—The accompanying Finance Statements of Provincial and Central Co-operative Banks in the Presidency of Bengal for the quarter ending March 1936 are published for general information.

A. M. ARSHAD ALI,

Registrar of Co-operative Societies, Bengal.

CENTRAL

Quarterly Finance

PART

Name of Bank.	Liabilities and Outside the movement.					
	Deposits, fixed, current or Savings Bank, by non-members or by members in an individual capacity.	Debentures.	Overdrafts from outside Banks, *e.g.*, Presidency or Joint Stock.	Other items.	Fixed deposits or loans received from— Provincial Bank.	Fixed deposits or loans received from— Central Banks or Societies.
1	2	3	4	5	6(*a*)	6(*b*)
	Rs.	Rs.	Rs.	Rs.	Rs.	Rs.
I.—PROVINCIAL BANK.						
Bengal Provincial Co-operative Bank, Ltd. ..	1,31,45,261	..	..	29,518	..	27,47,509
II.—CENTRAL BANKS.						
Calcutta.						
Central Co-operative Anti-Malarial Society, Ltd. ..	..	..	..	..	..	..
Co-operative Milk Societies Union, Ltd. ..	31,294	..	..	..	..	17,000
District 24-Parganas.						
Taki Central Co-operative Bank, Ltd. ..	2,52,251	..	..	8,405	1,00,000	3,470
Nimta Central Co-operative Bank, Ltd. ..	36,367	..	..	..	..	..
Diamond Harbour Central Co-operative Bank, Ltd.	63,570	..	..	..	..	..
Barasat Central Co-operative Bank, Ltd. ..	1,89,945	..	..	..	..	1,010
Gosava Central Co-operative Bank, Ltd. ..	65,180	..	..	..	..	..
District Nadia.						
Nadia Central Co-operative Bank, Ltd. ..	7,40,499	..	..	..	..	1,526
Kushtia Central Co-operative Bank, Ltd. ..	1,95,669	2,853	..	7,009	1,80,100	41,500
Meherpur Central Co-operative Bank, Ltd. ..	2,40,899	..	..	..	..	..
Ranaghat Central Co-operative Bank, Ltd. ..	1,74,317	..	..	2,775	..	1,938
Chuadanga Central Co-operative Bank, Ltd. ..	1,84,103	..	..	1,292	34,000	6,172
District Jessore.						
Jessore Central Co-operative Bank, Ltd. ..	5,38,632	..	..	6,106	..	6,270
Magura Central Co-operative Bank, Ltd. ..	5,49,624	..	..	3,287	34,500	..
Narail Central Co-operative Bank, Ltd. ..	3,70,127	..	..	4,076	43,500	5,822
Jhenidah Central Co-operative Bank, Ltd. ..	17,484	..	..	..	..	3,223
District Khulna.						
Khulna Central Co-operative Bank, Ltd. ..	5,11,138	..	..	7,303	..	13,432
Bagerhat Central Co-operative Bank, Ltd. ..	2,73,803	..	..	3,419	..	1,550
Raruli Central Co-operative Bank, Ltd. ..	1,84,288	..	..	6,405	..	9,568
District Murshidabad.						
Jangipur Central Co-operative Bank, Ltd. ..	1,72,141	..	..	..	..	..
Berhampore Central Co-operative Bank, Ltd. ..	9,37,606	..	..	9,432	..	10,572
Lalbagh Central Co-operative Bank, Ltd. ..	2,40,237	..	..	..	18,850	20,341
Kandi Central Co-operative Bank, Ltd. ..	1,02,497	..	..	..	32,500	25,040
District Howrah.						
Howrah Central Co-operative Bank, Ltd. ..	..	..	..	..	..	..
Uluberia Central Co-operative Bank, Ltd. ..	56,051	..	..	..	..	100
District Hooghly.						
Hooghly Central Co-operative Bank, Ltd. ..	6,59,599	..	..	229	..	93,650
Arambagh Central Co-operative Bank, Ltd. ..	33,687	..	..	..	..	28,000

BANKS.

Statement.

I.

quasi-liabilities.							Assets and quasi-assets.	
Within the movement.							Outside the movement.	
Drawn portion of cash credit with Provincial Bank.	Savings Bank or current accounts held in favour of Societies or Central Banks.	Reserve fund of Bank itself.	Paid-up share capital.	Other items.	Undrawn liabilities, *e.g.*, cash credit accounts guaranteed by the Provincial Banks to Central Banks or to Societies and by Central Banks to other Central Banks or Societies.		Cash in hand and in outside Banks.	Government paper.
					To cover deposits.	For loans transaction.		
7	8	9	10	11	12	13	14	15
Rs.	Rs.	Rs.	Rs.	Rs.	Rs.	Rs.	Rs.	Rs.
..	36,51,052	4,21,108	16,68,825	28,76,763	..	49,427	51,653	87,63,063
..	..	11,700	..	..	..	..	75	74,500
..	22,656	67,960	13,860	56,459	..	..	3,084	190
..	646	35,879	73,360	7,652	..	..	611	16,456
..	..	3,175	3,125	8,123	..	..	12,228	..
..	..	7,148	13,910	16,848	..	..	1,971	..
..	2,316	29,000	22,480	6,984	..	..	1,058	..
..	2,490	2,733	4,675	10,365	..	..	153	..
..	..	21,000	45,630	21,712	..	..	30,258	..
..	3,898	36,516	58,130	24,461	..	..	2,630	..
..	504	18,000	37,162	31,044	..	..	2,600	..
..	3,250	11,989	30,590	21,241	..	..	4,400	9,400
3,632	8,190	8,965	22,810	23,650	..	..	4,513	..
..	..	57,500	69,000	51,473	..	..	1,221	824
17,384	..	34,200	56,975	53,455	..	..	4,240	..
..	72	24,830	46,635	51,969	..	..	172	..
..	..	1,750	4,235	1,380	..	..	61	..
..	4,741	68,428	64,770	17,186	1,852	..	12,702	..
..	6,020	13,117	38,365	28,186	..	..	9,993	..
..	1,789	17,400	31,470	59,996	..	..	3,983	4,000
8,000	371	17,561	34,555	19,889	..	..	1,466	..
..	..	33,000	57,480	65,606	..	..	4,140	..
..	..	12,520	31,116	3,626	..	..	489	..
..	..	7,913	20,005	11,129	..	..	590	..
..	..	1,094	4,110	2,831	..	..	3	..
..	..	1,734	5,080	351	..	..	70	..
..	16,616	17,261	65,215	39,954	..	..	7,345	1,070
..	..	3,053	9,160	800	..	..	4,307	..

CENTRAL

Quarterly Finance

PART

Name of Bank.	Assets and					
	Outside the movement.					
	Post Office Savings Bank deposits.	Other investments of a liquid nature in outside concerns.	Undrawn balance of assured cash credit.		Loans to Agricultural Societies.	Loans to non-Agricultural Societies.
			With Presidency or Joint Stock Bank.	With Provincial Bank.		
	16	17	18	19	20	21
	Rs.	Rs.	Rs.	Rs.	Rs.	Rs.
I.—PROVINCIAL BANK.						
Bengal Provincial Co-operative Bank, Ltd. ..	..	4,500	38,99,950	..	25,93,260	8,83,276
II.—CENTRAL BANKS.						
Calcutta.						
Central Co-operative Anti-Malarial Society, Ltd. ..	..	..	..	..	..	..
Co-operative Milk Societies Union, Ltd. ..	..	12,413	..	..	..	4,409
District 24-Parganas						
Taki Central Co-operative Bank, Ltd. ..	7,222	1,017	..	..	3,48,427	29,123
Nimta Central Co-operative Bank, Ltd. ..	3	..	..	..	16,331	..
Diamond Harbour Central Co-operative Bank, Ltd.	2,310	..	..	..	56,365	5,461
Barasat Central Co-operative Bank, Ltd. ..	67	..	..	..	1,86,815	1,000
Gosava Central Co-operative Bank, Ltd. ..	..	..	..	..	10,113	68,879
District Nadia.						
Nadia Central Co-operative Bank, Ltd. ..	..	1,36,110	..	..	4,48,865	6,528
Kushtia Central Co-operative Bank, Ltd. ..	9,791	..	..	..	4,29,310	..
Meherpur Central Co-operative Bank, Ltd. ..	9,640	..	..	..	1,79,867	3,215
Ranaghat Central Co-operative Bank, Ltd. ..	4,200	3,589	500	..	1,66,387	..
Chuadanga Central Co-operative Bank, Ltd. ..	1,344	..	..	6,368	1,60,546	18,648
District Jessore.						
Jessore Central Co-operative Bank, Ltd. ..	12,556	..	..	..	4,14,487	1,421
Magura Central Co-operative Bank, Ltd. ..	181	..	..	7,616	4,18,739	1,400
Narail Central Co-operative Bank, Ltd. ..	547	..	..	..	3,35,914	..
Jhenidah Central Co-operative Bank, Ltd. ..	164	..	..	..	23,919	..
District Khulna.						
Khulna Central Co-operative Bank, Ltd. ..	1,338	500	..	..	3,83,427	34,400
Bagerhat Central Co-operative Bank, Ltd. ..	4,001	..	..	..	2,27,197	6,586
Raruli Central Co-operative Bank, Ltd. ..	3,500	500	..	..	1,81,071	13,515
District Murshidabad.						
Jangipur Central Co-operative Bank, Ltd. ..	3,555	..	..	..	1,76,946	6,814
Berhampore Central Co-operative Bank, Ltd. ..	29,000	4,500	..	..	2,90,595	3,753
Lalbagh Central Co-operative Bank, Ltd. ..	3,045	..	..	..	2,16,941	4,259
Kandi Central Co-operative Bank, Ltd. ..	326	..	..	..	1,38,926	1,150
District Howrah.						
Howrah Central Co-operative Bank, Ltd. ..	..	..	..	..	3,634	256
Uluberia Central Co-operative Bank, Ltd. ..	166	..	..	..	24,700	..
District Hooghly.						
Hooghly Central Co-operative Bank, Ltd. ..	750	..	..	..	4,03,697	415
Arambagh Central Co-operative Bank, Ltd ..	3,914	..	..	..	61,266	..

BANKS.

Statement.

I.—*continued.*

quasi-assets.

Within the movement.						Rates of interest on which money is usually—		
Loans or deposits due to the Central Bank by the Provincial Bank or other Central Banks.	Loans and deposits due to Provincial Bank by Central Banks.	Uncalled share capital.	Guaranteed share capital.	Other investments inside the movement.	Net profit of past year.	Borrowed.	Lent.	Last dividend declared.
22	23	24	25	26	27	28	29	30
Rs.	Rs.	Rs.	Rs.	Rs.	Rs.	Per cent.	Per cent.	Per cent.
*1,41,163	1,03,58,603	16,68,825	..	..	2,45,737	2 to 3½	6½	..
10,090	..	..	..	..	..	..	..	..
31,748	..	..	..	36,300	69	3½ to 5½	12	..
1,260	..	..	..	19,250	10,013	1½ to 6	10½ to 12½	..
16,427	..	3,125	..	1,992	752	3½ to 5½	10 15/16	..
5,076	..	14,765	..	11,900	1,807	3½ to 7	7¼ to 10 15/16	..
..	..	29,320	..	33,537	2,382	3 to 6	10 15/16	6
5,570	..	..	..	1,312	1,206	5½ to 5	7½ to 9⅜	9⅜
1,16,159	..	68,460	..	2,450	4,769	3½ to 5½	9⅜ to 10½	..
246	..	58,130	..	..	5,773	3 to 8	10½	..
92,532	..	53,147	..	..	4,622	3 to 5	8 15/16 to 9⅜	6½
21,321	..	30,590	..	3,350	6,250	3 to 5	9½ to 12	..
2,124	..	28,725	..	17,416	5,852	3½ to 4	9⅜ to 12½	..
1,53,124	..	69,000	..	2,120	9,761	3 to 6½	9⅜ to 11⅛	3
80,068	..	1,425	..	15,250	15,748	3	9⅜	..
1,223	..	18,46.	..	21,166	7,30.	3½ to 7	9⅜ to 10 15/16	..
..	..	7,515	..	671	742	6½ to 8	12	..
1,41,786	..	10,980	..	87,853	13,659	2½ to 5½	7 to 10	6½
40,617	..	19,885	..	23,026	340	4½ to 6½	9⅜ to 10 15/16	..
39,341	..	..	..	27,621	2,984	2 to 5	10 15/16	..
16,726	..	41,285	..	45	3,087	3½ to 6½	6½ to 7½	..
6,43,383	..	76,377	..	4,134	6,183	4½	10 15/16	..
..	..	32,674	..	..	6,619	2½ to 4	3½ to 5½	..
2,172	..	23,995	..	11,950	2,305	3½ to 8	9⅜ to 12½	6
3,345	..	22,540	..	..	123	..	7⅜	..
37,382	..	5,080	..	..	606	2½ to 5	8½ to 10 15/16	..
3,76,558	..	68,585	..	47,987	11,877	2½ to 7	7 to 10	3½
..	..	9,180	..	..	1,270	6½ to 7½	10½ to 10 15/16	..

*Advances to Land Mortgage Banks.

PART

Name of Bank.	Liabilities and Outside the movement.					
	Deposits, fixed, current or Savings Bank, by non-members or by members in an individual capacity.	Debentures.	Overdrafts from outside Banks, e.g., Presidency or Joint Stock.	Other items.	Fixed deposits or loans received from -- Provincial Bank.	Fixed deposits or loans received from -- Central Banks or Societies.
1	2	3	4	5	6(a)	6(b)
II.—CENTRAL BANKS—*contd.*	Rs.	Rs.	Rs.	Rs.	Rs.	Rs.
District Bankura.						
Bankura Central Co-operative Bank, Ltd. ..	3,90,763	..	..	..	..	..
Bankura District Co-operative Industrial Union, Ltd.	42,142	..	..	4,001	..	..
Bishnupur Central Co-operative Bank, Ltd. ..	14,827	..	..	..	..	..
District Birbhum.						
Rampurhat Central Co-operative Bank, Ltd. ..	3,68,945	..	..	4,818	..	11,692
Birbhum Central Co-operative Bank, Ltd. ..	5,06,213	..	..	4,780	..	2,000
Biswabharati Central Co-operative Bank, Ltd. ..	1,86,621	..	..	..	..	50,000
Nalhati Central Co-operative Bank, Ltd. ..	1,87,202	..	..	6,068	..	1,28,727
District Midnapore.						
Midnapore Central Co-operative Bank, Ltd. ..	7,35,302	..	..	40,313	..	8,130
Khelar Balarampur Central Co-operative Bank, Ltd.	1,12,526	..	..	1,427	..	..
Beleberia Central Co-operative Bank, Ltd. ..	82,122	..	..	224	..	..
Tamluk Central Co-operative Bank, Ltd. ..	6,50,669	..	..	..	..	1,500
Mugberia Central Co-operative Bank, Ltd. ..	81,976	..	..	..	37,400	15,645
Balagoria Central Co-operative Bank, Ltd. ..	97,158	..	..	1,344	5,800	33
Ghatal Central Co-operative Bank, Ltd. ..	55,844	..	..	..	..	39,546
District Burdwan.						
Kalna Central Co-operative Bank, Ltd. ..	2,85,074	..	..	..	..	9,557
Burdwan Central Co-operative Bank, Ltd. ..	24,06,471	..	..	11,456	..	..
Katwa Central Co-operative Bank, Ltd. ..	79,176	..	..	..	..	75,753
Asansol Central Co-operative Bank, Ltd. ..	78,347	..	..	..	..	..
District Dacca.						
Dacca Central Co-operative Bank, Ltd. ..	8,39,449	..	..	7,157	..	..
Narayanganj Central Co-operative Bank, Ltd. ..	1,95,672	..	..	..	4,60,000	..
Rajpura Central Co-operative Bank, Ltd. ..	1,26,340	..	..	2,648	6,85,300	..
Bikrampur Central Co-operative Bank, Ltd. ..	59,812	..	..	..	1,30,000	..
Manikganj Central Co-operative Bank, Ltd. ..	2,15,556	..	..	..	79,600	..
Ichhapura Central Co-operative Bank, Ltd. ..	28,291	..	..	..	51,150	13,089
Baira Central Co-operative Bank, Ltd. ..	14,188	..	..	..	1,10,000	7,500
Kaliganj Central Co-operative Bank, Ltd. ..	68,867	..	..	..	99,500	..
Tangi Central Co-operative Bank, Ltd. ..	1,01,716	..	..	..	1,12,000	..
Dacca Co-operative Industrial Union, Ltd. ..	121	..	..	..	4,18,516	..
Dacca Co-operative Milk Societies Union, Ltd. ..	2,354	..	..	2,000	10,720	3,000
District Mymensingh.						
Mymensingh Central Co-operative Bank, Ltd. ..	17,11,510	..	2,84,302	..	4,04,000	35,210
Jamalpur Central Co-operative Bank, Ltd. ..	2,71,982	..	8,909	..	2,79,000	50,606
Kishoreganj Central Co-operative Bank, Ltd. ..	1,91,645	..	..	..	1,65,000	7,087
Tangail Central Co-operative Bank, Ltd. ..	3,30,968	..	..	..	3,40,000	10,773
Netrokona Central Co-operative Bank, Ltd. ..	58,210	..	..	..	2,99,700	3,400
Sarisabari Central Co-operative Bank, Ltd. ..	18,459	..	..	1,276	1,20,332	2,416
Dhanbari Central Co-operative Bank, Ltd. ..	3,972	..	..	1,893	1,67,000	22,000
Pingna Central Co-operative Bank, Ltd. ..	50,296	..	..	3,442	2,01,100	28,894
Madarganj Central Co-operative Bank, Ltd. ..	39,773	..	573	1,310	1,34,000	4,000
Gaffargaon Central Co-operative Bank, Ltd. ..	13,815	..	..	1,545	1,32,455	..
Bhairab Central Co-operative Bank, Ltd. ..	427	..	..	..	6,025	..
District Faridpur.						
Faridpur Central Co-operative Bank, Ltd. ..	4,22,335	..	..	5,817	57,500	..
Madaripur Central Co-operative Bank, Ltd. ..	2,45,267	..	..	11,488	5,51,800	..
Goalundo Central Co-operative Bank, Ltd. ..	3,16,160	..	..	174	..	..
Gopalganj Central Co-operative Bank, Ltd. ..	2,69,289	..	..	4,600	8,000	150

I—*continued.*

Quasi-liabilities.							Assets and quasi-assets.	
Within the movement.							Outside the movement.	
Drawn portion of cash credit with Provincial Bank.	Savings Bank or current accounts held in favour of Societies or Central Banks.	Reserve fund of Bank itself.	Paid-up share capital.	Other items.	Undrawn liabilities, *e.g.*, cash credit accounts guaranteed by the Provincial Banks to Central Banks or to Societies and by Central Banks to other Central Banks or Societies.		Cash in hand and in outside Banks.	Government paper.
					To cover deposits.	For loans transaction.		
7	8	9	10	11	12	13	14	15
Rs.	Rs.	Rs.	Rs.	Rs.	Rs.	Rs.	Rs.	Rs.
..	17,418	17,550	56,985	21,005	7,310	432	24,844	8,582
..	..	836	10,865	6,275	..	..	501	..
..	..	1,260	4,650	1,779	..	..	237	..
..	3,886	19,600	34,200	38,878	170	..	8,541	..
..	4,985	17,433	48,120	30,465	..	..	6	24,000
..	..	7,035	42,585	16,372	..	2,000	2,985	..
..	..	15,944	49,710	17,709	..	..	8,718	..
..	19,111	60,000	1,07,300	55,890	..	..	14,884	..
..	..	19,250	35,180	23,273	..	..	1,318	..
..	..	13,795	22,930	23,344	..	..	2,882	..
..	1,661	27,000	54,465	42,682	..	..	6,287	..
..	..	13,541	35,530	3,981	..	..	2,756	..
..	440	3,400	20,680	2,955	..	..	5,279	..
..	160	2,761	21,625	6,213	..	..	1,052	1,700
..	4,267	12,215	39,702	26,145	..	1,000	4,217	..
..	..	31,890	2,15,480	30,794	..	..	81,457	72,195
..	..	2,145	19,450	668	..	..	14,633	..
..	..	684	12,940	1,030	..	..	4,515	..
..	970	1,15,690	1,27,920	88,628	..	..	17,230	75,502
..	8'8	26,000	77,715	48,698	..	..	3,954	..
..	2,207	30,000	84,650	61,906	..	..	83	..
..	..	34,500	41,620	75,245	..	..	116	1,578
..	3,393	20,432	47,192	25,738	..	..	2,029	1,301
..	108	3,977	12,625	..	..	..	145	..
..	..	4,683	18,850	10,586	..	..	133	..
..	..	3,710	17,740	..	..	..	1,472	..
..	..	6,952	20,725	10,976	..	..	1,433	..
16,782	..	5,244	1,11,652	11,532	..	..	8,790	3,900
..	300	1,141	4,620	..	..	..	158	..
45,122	366	2,47,700	2,72,700	1,58,115	..	..	8,559	2,84,500
12,102	3,909	65,000	83,975	1,48,791	..	..	8,105	16,792
..	1,956	38,154	62,035	24,537	..	..	986	..
..	..	50,427	1,09,580	80,277	..	..	722	..
..	..	11,320	36,400	21,230	..	..	1,346	..
..	812	4,642	14,990	242	..	..	111	..
..	315	7,072	27,090	16,472	..	..	561	..
..	22	12,978	37,070	28,943	..	..	86	1,650
..	212	8,154	24,175	44,769	..	..	100	9,500
..	9	4,125	20,425	..	..	..	87	..
..	..	..	1,750	..	..	..	101	..
3,000	1,205	81,000	58,445	66,321	..	..	9	18,500
..	3,410	25,000	89,895	65,787	..	..	3,305	..
..	..	37,170	43,300	41,388	..	..	829	..
..	1,096	29,225	46,475	50,167	..	..	4,235	..

PART

Name of Bank.	Outside the movement.				Assets and	
	Post office Savings Bank deposits.	Other investments of a liquid nature in outside concerns.	Undrawn balance of assured cash credit.		Loans to Agricultural Societies.	Loans to non-Agricultural Societies.
			With Presidency or Joint Stock Bank.	With Provincial Bank.		
	16	17	18	19	20	21
II.—CENTRAL BANKS—*contd.*	Rs.	Rs.	Rs.	Rs.	Rs.	Rs.
District Bankura.						
Bankura Central Co-operative Bank, Ltd. ..	10,000	189	..	..	2,08,082	3,423
Bankura District Co-operative Industrial Union, Ltd.	..	11,986	..	..	3,496	13,012
Bishnupur Central Co-operative Bank, Ltd. ..	1,404	..	..	..	15,459	1,254
District Birbhum.						
Rampurhat Central Co-operative Bank, Ltd. ..	5337	..	..	..	..	..
Birbhum Central Co-operative Bank, Ltd. ..	17,315	10,000	..	..	2,52,432	3,644
Biswabharati Central Co-operative Bank, Ltd. ..	789	3,280	..	..	2,04,825	322
Nalhati Central Co-operative Bank, Ltd. ..	450	..	..	..	3,08,492	4,424
District Midnapore.						
Midnapore Central Co-operative Bank, Ltd. ..	2,450	500	..	..	3,20,603	12,809
Kholar Balarampur Central Co-operative Bank, Ltd.	3,302	21,762	..	..	1,35,414	..
Beleberia Central Co-operative Bank, Ltd. ..	9,249	..	..	..	1,04,806	..
Tamluk Central Co-operative Bank, Ltd. ..	9,612	4,953	..	..	2,55,004	1,193
Mugberia Central Co-operative Bank, Ltd. ..	1,000	..	..	..	1,33,201	..
Balagoria Central Co-operative Bank, Ltd. ..	2,190	..	..	..	1,01,400	3,500
Ghatal Central Co-operative Bank, Ltd. ..	4,259	..	..	..	1,07,706	..
District Burdwan.						
Kalna Central Co-operative Bank, Ltd. ..	3,145	..	..	..	2,71,904	..
Burdwan Central Co-operative Bank, Ltd. ..	10,210	2,51,625	..	..	7,30,507	..
Katwa Central Co-operative Bank, Ltd. ..	1,633	2,500	..	..	1,34,779	3,893
Asansol Central Co-operative Bank, Ltd. ..	2,000	..	..	..	60,304	126
District Dacca.						
Dacca Central Co-operative Bank, Ltd. ..	21,338	4,550	..	..	7,77,254	12,604
Narayanganj Central Co-operative Bank, Ltd. ..	6,551	..	..	..	6,38,710	1,000
Raipura Central Co-operative Bank, Ltd. ..	501	62	..	..	7,68,239	4,878
Bikrampur Central Co-operative Bank, Ltd. ..	2,838	..	..	..	2,57,127	..
Manikganj Central Co-operative Bank, Ltd. ..	3,501	6,835	..	..	2,92,049	..
Ichhapura Central Co-operative Bank, Ltd. ..	23	..	..	..	83,155	11,018
Baira Central Co-operative Bank, Ltd. ..	6,165	..	..	..	1,20,901	..
Kaliganj Central Co-operative Bank, Ltd. ..	1,225	..	..	..	1,60,905	..
Tangi Central Co-operative Bank, Ltd. ..	50	58	..	..	1,79,055	..
Dacca Co-operative Industrial Union, Ltd. ..	..	..	..	..	..	1,25,901
Dacca Co-operative Milk Societies Union, Ltd. ..	5	..	..	..	21,712	..
District Mymensingh.						
Mymensingh Central Co-operative Bank, Ltd. ..	14,639	8,301	4,669	4,878	22,16,881	1,21,636
Jamalpur Central Co-operative Bank, Ltd. ..	173	..	..	..	6,99,774	4,454
Kishoreganj Central Co-operative Bank, Ltd. ..	1,967	4,960	..	..	4,61,281	4,970
Tangail Central Co-operative Bank, Ltd. ..	2,010	..	..	..	8,83,086	..
Netrokona Central Co-operative Bank, Ltd. ..	3,100	620	..	..	2,74,907	34,186
Sarisabari Central Co-operative Bank, Ltd. ..	660	..	..	..	1,38,001	..
Dhanbari Central Co-operative Bank, Ltd. ..	700	..	..	..	2,18,348	2,290
Pingna Central Co-operative Bank, Ltd. ..	5,095	144	..	..	3,47,010	..
Madarganj Central Co-operative Bank, Ltd. ..	3,001	..	9,057	..	1,58,049	473
Gaffargaon Central Co-operative Bank, Ltd. ..	3,045	..	..	..	1,46,616	..
Bhairab Central Co-operative Bank, Ltd. ..	2,560	..	..	..	4,618	..
District Faridpur.						
Faridpur Central Co-operative Bank, Ltd. ..	1,365	..	..	24,700	5,08,897	3,945
Madaripur Central Co-operative Bank, Ltd. ..	5,309	..	..	..	7,29,429	4,330
Goalundo Central Co-operative Bank, Ltd. ..	21,400	4,038	..	..	3,00,373	20,009
Gopalganj Central Co-operative Bank, Ltd. ..	5,780	..	..	..	2,96,423	2,065

I—*continued.*

quasi-assets.

Within the movement.								
Loans or deposits due to the Central Bank by the Provincial Bank or other Central Banks.	Loans and deposits due to Provincial Bank by Central Banks.	Uncalled share capital.	Guaranteed share capital.	Other investments inside the movement.	Net profit of past year.	Rates of interest on which money is usually—		Last dividend declared.
						Borrowed.	Lent.	
22	23	24	25	26	27	28	29	30
Rs.	Rs.	Rs.	Rs.	Rs.	Rs.	Per cent.	Per cent.	Per cent.
2,01,486	..	71,415	..	..	10,550	2 to 7½	8 to 10½	5
..	..	15,340	..	30,413	..	3½	7½	..
2,381	..	12,450	..	750	101	5 to 7½	7½ to 10½	..
2,18,827	..	..	..	37,418	5,295	2 to 5	7½ to 9½	..
1,62,063	..	52,135	..	55,241	2,346	3½ to 4½	7½ to 9½	..
26,295	..	6,900	..	24,705	2,300	2 to 6	10½ to 12	..
22,050	..	49,725	..	18,477	1,940	2 to 5½	9½	4 & 3
5,79,454	..	1,60,950	..	1,02,650	11,106	2½ to 5½	9½	2½ & 6½
..	..	..	..	11,750	55	2½ to 8	9½	..
9,100	..	22,930	..	9,041	1,927	4 to 6½	9½	..
4,18,369	..	63,095	..	8,020	6,171	3½ to 4½	9½ to 10½	..
..	..	..	..	..	1,868	3½ to 8	10⅝	..
187	..	..	..	13,344	889	3 to 7½	9½	..
825	..	21,625	..	13,375	453	4½ to 7½	9½ & 10	..
28,976	..	..	..	4,970	4,591	2 to 5	7½ to 10½	..
11,91,300	..	3,295	..	2,004	40,802	1 to 6½	3½ to 9½	..
1,800	..	19,450	..	5,150	105	3 to 6½	10½	..
20,116	..	3,175	..	4,214	59	2½ to 5	10	..
97,391	..	..	..	7,725	17,224	3 to 6	2½ to 9½	..
741	..	88,835	..	57,569	12,558	2 to 8	9½ to 11½	..
5,277	..	81,650	..	76,326	10,243	3 to 8	10 to 10½	..
141	..	..	..	14,039	9,968	2½ to 6½	10½ to 12½	..
247	..	57,108	..	10,289	6,163	2½ to 4½	9½	6½
56	..	12,625	..	7,750	2,135	5½ to 8	12	..
10	..	18,850	..	13,129	2,752	2½ to 8	10½	..
543	..	17,740	..	8,000	3,034	4½ to 8	12	..
7	..	20,725	..	1,229	2,031	4½ to 8	12½	..
1,48[illegible]	..	4,883	..	4,14,509	..	8	12½	..
23	..	4,620	..	..	..	6½ to 8½	12½	..
1,11,000	..	22,400	..	1,15,651	1,09,108	1 to 8	7½ to 9½	Nil
20,266	..	..	..	307	21,407	2½ to 7	9½ to 12½	..
18,163	..	76,075	..	21,086	9,702	2½ to 8	9½	..
..	..	1,10,155	..	47,435	8,310	3 to 6½	9½	..
19,656	..	36,400	..	68,283	1,269	2½ to 8	10 to 11½	..
497	..	14,990	..	13,350	1,713	4 to 8	11½	3½
..	..	..	..	16,761	28	6½ to 8½	10⅝	..
..	..	..	..	22,976	6,456	3 to 8½	10⅝	..
1,040	..	24,175	..	2,473	1,590	2 to 8	12	..
..	..	20,425	..	14,800	3,419	5 to 8	10½	..
..	..	6,310	..	..	73	8 to 9½	10⅝	..
931	..	57,435	..	861	15,542	2½ to 8	12	Nil
..	..	89,895	..	1,01,620	20,556	3 to 8	12½	..
10,783	..	43,300	..	28,672	7,942	2 to 6½	9½	Nil
7,490	..	51,450	..	27,950	8,679	2⅛ to 5	9½	..

PART

Name of Bank.	Liabilities and — Outside the movement. — Deposits, fixed, current or Savings Bank, by nonmembers or by members in an individual capacity.	Debentures.	Overdrafts from outside Banks, *e.g.*, Presidency or Joint Stock.	Other items.	Within — Fixed deposits or loans received from— Provincial Bank.	Central Banks or Societies.
1	2	3	4	5	6(a)	6(b)
	Rs.	Rs.	Rs.	Rs.	Rs.	Rs.
II.—CENTRAL BANKS—*contd.*						
District Bakarganj.						
Barisal Central Co-operative Bank, Ltd. ..	14,29,430	..	..	..	..	..
Patuakhali Central Co-operative Bank, Ltd. ..	94,740	..	..	..	..	1,06,147
Bhola Central Co-operative Bank, Ltd. ..	70,898	..	..	..	1,06,400	1,84,953
Khepupara Central Co-operative Bank, Ltd. ..	16,072	..	..	..	1,18,080	2,20,946
Mathbaria Central Co-operative Bank, Ltd. ..	29,842	..	..	..	60,050	1,31,682
Perojpur Central Co-operative Bank, Ltd. ..	78,186	..	..	..	7,850	5,336
District Chittagong.						
Chittagong Central Co-operative Bank, Ltd. ..	2,76,278	..	..	..	..	1,57,320
Cox's Bazar Central Co-operative Bank, Ltd. ..	45,838	..	..	..	86,000	20,000
Chittagong District Co-operative Industrial Union, Ltd.	196	..	..	..	1,15,000	..
Chittagong Central Co-operative Milk Supply Union, Ltd.	..	..	..	..	2,900	..
Chittagong Zilla Samabay Krishi Samity, Ltd. ..	2,945	..	..	..	60,000	..
District Noakhali.						
Noakhali Central Co-operative Bank, Ltd. ..	2,85,112	..	..	6,422	1,00,000	46,450
Feni Central Co-operative Bank, Ltd. ..	4,85,781	..	..	..	..	12,062
Raipura Central Co-operative Bank, Ltd. ..	3,473	..	..	..	1,05,600	463
Lakshmipur Central Co-operative Bank, Ltd. ..	44,842	..	..	..	1,29,300	6,589
Hatiya Central Co-operative Bank, Ltd. ..	42,789	..	..	1,974	1,71,650	15,215
Sandvip Central Co-operative Bank, Ltd. ..	1,02,108	..	..	..	1,11,600	5,176
Chaumuhani Co-operative Industrial Union, Ltd. ..	740	..	..	..	65,150	..
Raipura Co-operative Industrial Union, Ltd. ..	1,456	..	..	..	19,130	40,168
District Tippera.						
Comilla Central Co-operative Bank, Ltd. ..	6,02,759	..	..	7,120	3,34,250	1,35,347
Daudkandi-Gouripur Central Co-operative Bank, Ltd.	9,780	..	..	..	2,22,500	85,514
Tippera Raj Central Co-operative Bank, Ltd. ..	1,97,052	..	..	31,546	35,000	8,000
Laksam Central Co-operative Bank, Ltd. ..	9,725	..	..	..	100	1,66,693
Brahmanbaria Central Co-operative Bank, Ltd. ..	2,53,309	..	..	..	3,96,000	..
Nabinagar Central Co-operative Bank, Ltd. ..	25,490	..	..	..	3,78,166	..
Chandpur Central Co-operative Bank, Ltd. ..	4,08,594	..	..	..	2,57,000	6,587
Matlab Central Co-operative Bank, Ltd. ..	34,251	..	..	..	3,78,800	..
District Rajshahi.						
Rajshahi Central Co-operative Bank, Ltd. ..	2,66,656	..	..	33,144	20,000	184
Nator Central Co-operative Bank, Ltd. ..	1,34,077	..	..	..	34,000	..
Naogaon Central Co-operative Bank, Ltd. ..	2,73,125	..	..	..	6,750	29,613
Puthia Central Co-operative Bank, Ltd. ..	1,20,230	..	..	..	16,170	..
Naogaon Co-operative Industrial Union, Ltd. ..	335	..	..	18	13,000	..
Naogaon Co-operative Milk Societies Union, Ltd.	69	..	..	2,600	..	1,460
District Pabna.						
Pabna Central Co-operative Bank, Ltd. ..	4,92,646	..	..	2,860	1,07,500	..
Ullapara Central Co-operative Bank, Ltd. ..	1,52,974	..	..	..	90,000	794
Serajganj Central Co-operative Bank, Ltd. ..	3,08,633	..	..	..	1,33,000	25,361
Shahzadpur Central Co-operative Bank, Ltd. ..	1,28,302	..	..	..	1,84,500	..
Bhanguria Central Co-operative Bank, Ltd. ..	3,524	..	..	..	71,500	1,621
District Dinajpur.						
Dinajpur Central Co-operative Bank, Ltd. ..	84,014	..	..	..	36,500	11,925
Balurghat Central Co-operative Bank, Ltd. ..	1,88,163	..	..	13,061	25,000	2,597
Thakurgaon Central Co-operative Bank, Ltd. ..	81,756	..	..	92,500	..	..

I—*continued.*

quasi-liabilities.							Assets and quasi-assets.	
the movement.							Outside the movement.	
Drawn portion of cash credit with Provincial Bank.	Savings Bank or current accounts held in favour of Societies or Central Banks.	Reserve fund of Bank itself.	Paid-up share capital.	Other items.	Undrawn liabilities, *e.g.*, cash credit accounts guaranteed by the Provincial Banks to Central Banks or to Societies and by Central Banks to other Central Banks or Societies.		Cash in hand and in outside Banks.	Government paper.
					To cover deposits.	For loans transaction.		
7	8	9	10	11	12	13	14	15
Rs.	Rs.	Rs.	Rs.	Rs.	Rs.	Rs.	Rs.	Rs.
..	..	1,10,000	1,33,625	1,09,479	..	..	22,722	56,660
..	3,896	26,619	36,825	18,148	..	..	..	..
..	..	12,673	53,313	72,748	..	..	3,645	..
..	5,800	84,054	1,04,092	1,00,053	..	..	426	..
..	4,451	25,000	42,175	32,853	..	..	1,318	431
..	760	2,467	18,725	2,502	..	..	2,289	..
..	51,088	30,375	88,250	8,052	..	..	22,043	57,500
..	1,894	5,350	23,400	3,411	..	..	630	..
..	..	1,727	13,599	..	..	..	7,691	..
..	..	608	3,022	536	..	..	35	..
..	1,129	2,886	8,951	4,909	..	..	72	..
..	..	27,983	55,700	20,876	..	..	5,964	..
..	10,686	36,917	58,575	39,592	..	..	3,190	..
..	425	3,515	10,870	4,900	..	..	350	..
..	..	15,200	33,400	14,193	..	..	497	..
..	146	11,006	35,125	13,032	..	..	1,189	..
..	969	11,379	38,310	12,326	..	..	3,990	..
..	..	3,626	8,410	..	..	..	108	..
..	..	..	5,390	..	..	..	..	..
..	..	86,596	1,18,730	16,072	..	..	4,155	12,300
..	29	10,750	38,765	15,132	..	..	3,047	..
..	1,334	23,500	42,840	..	..	..	1,556	..
..	..	3,341	35,855	14,305	..	..	286	..
..	..	32,408	75,525	30,172	..	..	12,236	5,940
..	..	7,013	45,925	20,240	..	..	1,184	..
20,000	1,821	61,073	1,11,600	59,915	..	..	7,679	..
..	2,240	10,950	54,375	16,272	..	..	686	..
35,000	3,467	27,500	54,287	52,591	..	..	15,019	..
..	..	6,810	20,450	2,706	..	..	214	..
..	19,381	17,854	56,704	..	..	..	3,047	..
10,000	..	5,359	21,158	9,601	5,000	1,000	436	..
14,000	..	1,321	5,849	282	..	..	1,198	..
..	..	60	750	180	..	..	5	..
..	12,710	91,422	1,04,700	93,823	..	1,500	3,665	43,600
7,000	..	16,822	39,455	..	..	..	3,346	..
..	13,275	51,799	78,790	95,917	..	..	505	500
994	..	12,571	40,290	31,256	..	1,894	743	..
..	6,917	750	10,210	2,028	..	..	434	..
..	112	3,822	12,880	..	..	..	6,521	..
..	1,525	13,596	33,875	9,602	..	..	20,991	..
9,992	..	8,656	20,125	..	8	..	1,663	..

PART

Name of Bank.	Assets and					
	Outside the movement.				Within	
	Post Office Savings Bank deposits.	Other investments of a liquid nature in outside concerns.	Undrawn balance of assured cash credit.		Loans to Agricultural Societies.	Loans to non-Agricultural Societies.
			With Presidency or Joint Stock Bank.	With Provincial Bank.		
	16	17	18	19	20	21
	Rs.	Rs.	Rs.	Rs.	Rs.	Rs.
II.—CENTRAL BANKS—*contd.*						
DISTRICT BAKARGANJ.						
Barisal Central Co-operative Bank, Ltd. ..	20,572	..	..	..	6,24,129	10,032
Patuakhali Central Co-operative Bank, Ltd. ..	8,571	..	..	..	2,06,575	46,641
Bhola Central Co-operative Bank, Ltd. ..	362	..	..	..	3,48,817	22,043
Khepupara Central Co-operative Bank, Ltd. ..	23	..	..	..	4,41,303	..
Mathbaria Central Co operative Bank, Ltd. ..	1,010	..	..	..	2,58,860	5,139
Perojpur Central Co-operative Bank, Ltd. ..	105	..	..	..	95,096	2,987
DISTRICT CHITTAGONG.						
Chittagong Central Co-operative Bank, Ltd. ..	5,529	..	..	..	4,03,356	24,592
Cox's Bazar Central Co-operative Bank, Ltd. ..	7,085	..	..	..	1,40,472	13,720
Chittagong District Co-operative Industrial Union, Ltd.	..	..	..	..	..	47,149
Chittagong Central Co-operative Milk Supply Union, Ltd.	..	2,107	..	..	4,007	..
Chittagong Zilla Samabay Krishi Samity, Ltd. ..	2,015	..	..	..	58,506	..
DISTRICT NOAKHALI.						
Noakhali Central Co-operative Bank, Ltd. ..	4,000	500	..	..	3,59,122	25,702
Feni Central Co-operative Bank, Ltd. ..	27,500	..	..	..	4,07,198	1,130
Raipura Central Co-operative Bank, Ltd. ..	2,000	..	..	..	66,972	5,459
Lakshmipur Central Co-operative Bank, Ltd. ..	1,010	..	..	..	1,85,251	..
Hatiya Central Co-operative Bank, Ltd. ..	1,751	..	..	..	2,30,911	3,800
Sandvip Central Co-operative Bank, Ltd. ..	1,769	..	..	..	2,24,189	..
Chaumuhani Co-operative Industrial Union, Ltd.	4,448	..	..	..	..	40,473
Raipura Co-operative Industrial Union, Ltd. ..	6	..	..	..	..	..
DISTRICT TIPPERA.						
Comilla Central Co-operative Bank, Ltd. ..	3,728	16,750	..	9,000	7,88,522	8,976
Daudkandi-Gouripur Central Co-operative Bank, Ltd.	2,719	..	..	..	2,97,597	3,597
Tippera Raj Central Co-operative Bank, Ltd. ..	..	..	..	..	2,83,103	176
Laksam Central Co-operative Bank, Ltd. ..	2,304	..	..	..	2,05,216	2,933
Brahmanbaria Central Co-operative Bank, Ltd. ..	27,302	..	..	..	5,84,944	30,042
Nabinagar Central Co-operative Bank, Ltd. ..	20,402	..	..	..	3,65,076	273
Chandpur Central Co-operative Bank, Ltd. ..	6,653	..	..	..	6,53,485	8,704
Matlab Central Co-operative Bank, Ltd. ..	1,500	..	..	..	3,93,943	..
DISTRICT RAJSHAHI.						
Rajshahi Central Co-operative Bank, Ltd. ..	20,000	4,965	..	..	3,43,328	313
Nator Central Co-operative Bank, Ltd. ..	2,561	121	..	..	1,58,270	..
Naogaon Central Co-operative Bank, Ltd. ..	..	..	39,100	..	3,47,852	..
Puthia Central Co-operative Bank, Ltd. ..	3	..	..	..	1,46,815	..
Naogaon Co-operative Industrial Union, Ltd. ..	..	..	..	..	..	27,918
Naogaon Co-operative Milk Societies Union, Ltd. ..	..	1,789	..	..	..	1,685
DISTRICT PABNA.						
Pabna Central Co-operative Bank, Ltd. ..	12,268	561	..	..	6,42,638	5,980
Ullapara Central Co-operative Bank, Ltd. ..	1,010	103	..	3,000	2,53,383	4,902
Serajganj Central Co-operative Bank, Ltd. ..	18,650	..	..	29,000	5,47,947	4,180
Shahzadpur Central Co-operative Bank, Ltd. ..	2,500	..	..	9,005	3,10,588	3,278
Bhanguria Central Co-operative Bank, Ltd. ..	1,874	..	..	..	78,386	2,062
DISTRICT DINAJPUR.						
Dinajpur Central Co-operative Bank, Ltd. ..	5	..	..	..	89,008	7,419
Balurghat Central Co-operative Bank, Ltd. ..	11,595	..	..	..	1,86,523	2,092
Thakurgaon Central Co-operative Bank, Ltd. ..	3,678	..	..	..	1,80,686	17,457

I—*continued.*

quasi-assets.

the movement.

Loans or deposits due to the Central Bank, by the Provincial Bank or other Central Banks.	Loans and deposits due to Provincial Bank by Central Banks.	Uncalled share capital.	Guaranteed share capital.	Other investments inside the movement.	Net profit of past year.	Rates of interest on which money is usually		Last dividend declared
						Borrowed.	Lent.	
22	23	24	25	26	27	28	29	30
Rs.	Rs.	Rs.	Rs.	Rs.	Rs.	Per cent.	Per cent.	Per cent.
9,31,383	..	1,46,525	..	30,028	37,221	2 to 6	2 to 10 15/16	6¼
1,447	..	40,485	..	7,200	9,651	1 3/16 to 8	9 to 12½	..
2,872	..	58,044	..	17,250	6,391	8	10 to 10 15/16	6¼
6,461	..	89,525	..	45,650	17,123	5 to 8	10 13/16	..
61	..	42,175	..	14,325	4,945	8	15 10/16	..
3,503	..	18,725	..	5 850	4,141	8	12½	..
42,706	..	88,250	..	9,350	7,500	3 to 7½	9 to 10½	9
131	..	23,400	..	15,900	..	3 to 8	9¾ to 10½	..
..	..	..	..	13,580	..	7½	10½	..
..	..	1,003	..	1,929	267	10½ to 12½	..	..
321	..	8,951	..	11,416	807	3 to 8	10½ to 15	..
37,041	..	55,700	..	13,100	5,047	2 to 6½	10	6¼
1,15,353	..	2,13,570	..	48,750	10,395	2½ to 8	10 5/8	6¼
40,012	..	10,9 .0	..	12,746	49	3 to 8	10 15/16	..
171	..	34,650	..	30,0 5	1,261	3 to 8	10 1/16 to 12½	3⅛
303	..	..	..	21,820	2,425	3 to 8⅛	9⅜	..
1,574	..	57,465	..	24,135	857	3 to 8	9⅜	5
..	..	..	..	13,440	..	6	10 13/16	..
..	..	5,390	..	2,000	..	5½ to 8	..	..
2,65,131	..	1,18,730	..	33,675	16,094	2 to 6	10 13/16	6¼
7,360	..	39,210	..	24,375	7,255	4⅛ to 8½	9¾ to 10 1/16	..
21,265	..	42,095	..	..	8,646	2 to 8	10 1/16	9⅜
..	..	35,855	..	..	751	4½ to 8⅛	10 13/16	6¼
32,961	..	75,525	..	37,961	8,351	2 to 8	9⅜	..
..	..	45,025	..	37,825	2,145	2⅛ to 8	9⅛ to 10 13/16	..
..	..	1,11,000	..	58,013	10,030	3 to 8	9⅜	..
39,791	..	54,375	..	39,791	1,240	3 to 8	10	..
33,242	..	77,063	..	5,076	8,055	3 to 8⅛	9⅞ to 10 7/16	6¼
..	..	26,450	..	3,400	877	4 to 8	10½	..
15,287	..	56,704	..	34,707	3,681	1½ to 6½	8½	..
..	..	..	..	2,000	897	3½ to 9	10 1/16 to 12½	..
..	..	5,849	..	..	27	8 to 8½	12½	..
167	..	270	..	100	..	6 to 7½	10 11/16	..
4,720	..	1,04,700	..	20,500	5,661	3 to 8	9⅜	..
..	..	39,455	..	21,460	3,872	3½ to 8½	10½	..
2,564	..	..	..	26,916	21,287	3 to 8	10	..
..	..	40,290	..	30,735	3,930	3 to 8½	10 to 10½	..
180	..	..	..	7,441	467	3 to 8	10½	..
12,777	..	..	..	5,600	689	3½ to 8	9⅜ to 12½	..
11,900	..	33,965	..	11,650	1,079	3 to 8	9⅜ to 10 11/16	..
382	..	..	..	..	5,487	2½ to 6½	9⅜ to 12½	..

PART

Name of Bank.	Liabilities and Outside the movement.				Within Fixed deposits or loans received from—	
	Deposits, fixed, current or Savings Bank, by non-members or, by members in an individual capacity.	Debentures.	Overdrafts from outside Banks, &c., Presidency or Joint Stock.	Other items.	Provincial Bank.	Central Banks or Societies.
1	2	3	4	5	6(a)	6(b)
II.—CENTRAL BANKS—*concld.*	Rs.	Rs.	Rs.	Rs.	Rs.	Rs.
DISTRICT RANGPUR.						
Gaibandha Central Co-operative Bank, Ltd. ..	2,16,629	..	..	5,772	74,700	..
Kurigram Central Co-operative Bank, Ltd. ..	62,168	..	..	..	1,26,000	..
Nilphamari Central Co-operative Bank, Ltd. ..	1,00,164	..	..	3,112	88,000	..
Rangpur Central Co-operative Bank, Ltd. ..	3,17,531	..	..	770	36,000	..
DISTRICT BOGRA.						
Bogra Central Co-operative Bank, Ltd. ..	7,69,014	..	..	..	2,13,000	1,62,293
Khanjanpur Central Co-operative Bank, Ltd. ..	70,364	..	..	..	61,850	9,059
Padmapara Central Co-operative Bank, Ltd. ..	31,550	..	..	..	1,25,000	5,000
Nawadaboga Central Co-operative Bank, Ltd. ..	59,288	..	..	40	43,400	10,012
Chandanbaisa Central Co-operative Bank, Ltd. ..	1,520	..	..	407	12,350	1,53,722
DISTRICT JALPAIGURI.						
Jalpaiguri Central Co-operative Bank, Ltd. ..	41,062	..	..	1,048	60,300	12,555
DISTRICT MALDA.						
Malda Central Co-operative Bank, Ltd. ..	1,72,061	..	..	1,073	35,000	10,517
Chanchal Raj Central Co-operative Bank, Ltd. ..	1,21,814	..	..	1,339	16,000	..
Nawabganj Central Co-operative Bank, Ltd. ..	24,208	..	..	..	38,400	..
Harishchandrapur Central Co-operative Bank, Ltd.	96,052	..	..	187	39,700	..
Bengal Co-operative Silk Union, Ltd. ..	..	27,500	..	942	14,000	9,458
DISTRICT DARJEELING.						
Darjeeling Central Co-operative Bank, Ltd. ..	4,465	..	..	..	37,488	..
Kalimpong Central Co-operative Bank, Ltd. ..	1,84,836	..	..	190	61,150	..
Pedong Central Co-operative Bank, Ltd. ..	27,857	..	..	..	42,100	..
Darjeeling Co-operative Milk Societies Union, Ltd. ..	7,293	..	..	563	55,484	..
TOTAL OF CENTRAL BANKS	2,78,82,832	30,353	2,93,784	3,88,098	1,02,07,716	26,20,708
TOTAL OF PROVINCIAL AND CENTRAL BANKS	4,10,28,093	30,353	2,93,784	4,17,616	1,02,07,716	53,68,217
TOTAL OF PREVIOUS QUARTER ..	4,01,98,459	35,942	2,69,326	3,60,982	1,15,64,064	53,65,401

I—*concluded.*

quasi-liabilities.							Assets and quasi-assets.	
the movement.							Outside the movement.	
Drawn portion of cash credit with Provincial Bank.	Savings Bank or current accounts held in favour of Societies or Central Banks.	Reserve Fund of Bank itself.	Paid-up share capital.	Other items.	Undrawn liabilities, *e.g.*, cash credit accounts guaranteed by the Provincial Banks to Central Banks or to Societies and by Central Banks to other Central Banks or Societies.		Cash in hand and in outside Banks.	Government paper.
					To cover deposits.	For loans transaction.		
7	8	9	10	11	12	13	14	15
Rs.	Rs.	Rs.	Rs.	Rs.	Rs.	Rs.	Rs.	Rs.
20,426	2,374	23,330	38,675	77,476	..	..	3,688	..
..	..	17,400	33,755	31,410	..	..	208	..
..	104	16,600	26,500	26,169	..	1,141	2,748	3,000
39,926	..	15,500	45,300	26,248	..	10,528	472	..
24,000	5	60,867	1,25,610	45,102	..	..	13,286	..
9,888	3,151	4,615	24,970	11,497	..	..	338	..
..	582	12,744	22,640	26,547	..	..	218	..
..	492	2,383	13,850	8,361	..	..	759	..
..	..	3,607	23,125	15,781	..	..	1,476	..
..	3,658	3,597	19,150	8,024	..	1,254	3,751	500
13,933	..	15,000	36,260	11,323	..	..	1,332	9,326
..	..	6,382	17,320	12,682	..	..	2,127	..
..	..	2,293	10,790	3,289	..	..	94	..
11,000	..	5,435	19,550	17,198	..	..	935	..
..	..	5,543	21,655	15,489	..	..	147	..
4,999	..	3,582	8,990	1,294	..	..	129	..
..	..	21,593	32,570	36,796	..	..	1,015	..
4,435	..	13,190	14,540	16,044	..	..	638	..
..	..	550	8,535	8,611	..	..	182	..
3,31,565	3,00,060	28,44,635	53,24,124	33,96,235	14,340	20,749	5,62,807	8,15,897
3,31,565	39,51,112	32,65,743	69,92,949	62,72,998	14,340	70,176	6,14,460	95,78,960
3,33,543	38,44,071	31,50,478	74,42,729	61,36,780	16,215	89,681	7,86,266	93,90,735

PART

Name of Bank.	Assets and liabilities outside the movement.				Assets and liabilities within the movement.	
	Post Office Savings Bank deposits.	Other investments of a liquid nature in outside concerns.	Undrawn balance of assured cash credit.		Loans to Agricultural Societies.	Loans to non-Agricultural Societies.
			With Presidency or Joint Stock Bank.	With Provincial Bank.		
	16	17	18	19	20	21
II.—CENTRAL BANKS—*concld.*	Rs.	Rs.	Rs.	Rs.	Rs.	Rs.
DISTRICT RANGPUR.						
Gaibandha Central Co-operative Bank, Ltd. ..	4,141	448	..	..	3,14,472	5,846
Kurigram Central Co-operative Bank, Ltd. ..	517	..	..	..	2,16,453	2,462
Nilphamari Central Co-operative Bank, Ltd. ..	1,660	..	..	..	1,81,752	859
Rangpur Central Co-operative Bank, Ltd. ..	..	1,000	..	74	2,47,504	1,128
DISTRICT BOGRA.						
Bogra Central Co-operative Bank, Ltd. ..	434	..	..	..	8,68,303	12,436
Khanjanpur Central Co-operative Bank, Ltd. ..	2,882	..	..	112	1,58,704	361
Padmapara Central Co-operative Bank, Ltd. ..	410	..	..	..	1,75,430	..
Nawababoga Central Co-operative Bank, Ltd. ..	108	..	..	..	1,15,945	..
Chandanbaisa Central Co-operative Bank, Ltd. ..	1,368	..	..	..	2,11,577	..
DISTRICT JALPAIGURI.						
Jalpaiguri Central Co-operative Bank, Ltd. ..	4,600	..	..	..	97,947	17,270
DISTRICT MALDA.						
Malda Central Co-operative Bank, Ltd. ..	1,767	..	..	1,067	1,56,638	29,665
Chanchal Raj Central Co-operative Bank, Ltd. ..	572	..	..	..	1,38,064	511
Nawabganj Central Co-operative Bank, Ltd. ..	728	..	..	..	62,093	..
Harishchandrapur Central Co-operative Bank, Ltd.	500	5,337	..	..	1,42,782	3,070
Bengal Co-operative Silk Union, Ltd. ..	3,800	15,730	..	541	..	33,924
DISTRICT DARJEELING.						
Darjeeling Central Co-operative Bank, Ltd. ..	46	..	..	..	49,041	..
Kalimpong Central Co-operative Bank, Ltd. ..	303	..	..	..	1,61,362	..
Pedong Central Co-operative Bank, Ltd. ..	20	..	..	565	97,825	..
Darjeeling Co-operative Milk Societies Union, Ltd.	..	280	..	..	..	1,824
TOTAL OF CENTRAL BANKS	5,44,320	5,44,683	53,326	86,926	3,36,45,844	11,03,811
TOTAL OF PROVINCIAL AND CENTRAL BANKS	5,44,320	5,49,183	39,53,276	86,926	3,62,39,104	19,87,087
TOTAL OF PREVIOUS QUARTER ..	8,04,423	2,03,273	39,59,761	96,386	3,67,23,635	19,51,228

I—concluded.

quasi-assets.

Within the movement.					Net profit of past year.	Rates of interest on which money is usually—		Last dividend declared.
Loans or deposits due to the Central Bank by the Provincial Bank or other Central Banks.	Loans and deposits due to Provincial Bank by Central Banks.	Uncalled share capital.	Guaranteed share capital.	Other investments inside the movement.		Borrowed.	Lent.	
22	23	24	25	26	27	28	29	30
Rs.	Rs.	Rs.	Rs.	Rs.	Rs.	Per cent.	Per cent.	Per cent.
28,215	..	38,675	..	3,149	4,624	2¼ to 8	9¼ to 10 11/16	..
1,410	..	66,245	..	..	7,215	7½ to 8	10½ to 12½	..
66	..	..	..	25,263	4,638	2½ to 8	9½ to 12½	..
12,119	..	45,300	..	13,225	6,432	7½ to 8½	10 11/16	..
1,65,934	..	1,25,610	..	23,950	21,200	2½ to 8½	9½ to 10½	
2,000	..	..	..	1,781	2,851	3 to 8	10 15/16	..
5	..	..	..	..	3,574	2½ to 8	10 11/16	..
..	..	13,850	..	4,400	1,178	1½ to 6½	9½	..
8,000	..	23,125	..	1,913	2,875	3½ to 8½	3½ to 10½	..
1,757	..	19,150	..	10,937	396	2 to 9	10 to 12½	..
..	..	36,260	..	65,730	1,306	3 to 8	9½ to 10 11/16	..
..	..	..	..	4,875	2,425	3 to 6	9 to 10 15/16	..
..	..	10,810	..	7,286	803	4 to 8	10 11/16 to 12½	..
62	..	19,550	..	7,002	2,364	3 to 6½	9⅜ to 10 11/16	..
491	..	24,045	..	7,512	..	6 to 8	10 11/16 to 12	..
364	..	..	..	10,940	2,145	4 to 8	10 11/16 to 12½	..
..	..	..	..	12,148	5,575	2½ to 8	9½	..
..	..	..	..	2,134	390	3½ to 8½	9 to 10	..
..	..	..	..	5,502	..	7½	10 11/16	..
71,69,226	..	42,38,216	..	27,54,737	7,83,265	..	..	..
73,10,389	1,03,58,603	59,07,041	..	27,54,737	10,39,002	..	..	..
67,51,502	1,04,13,863	60,63,279	..	26,84,843	9,30,884	..	..	..

PART

Name of Bank.	Deposits or	
	On current or Savings Bank account.	Deposits for not more than three months.
1	2	3
	Rs.	Rs.
I.—PROVINCIAL BANK.		
Bengal Provincial Co-operative Bank, Ltd.	20,49,720	16,000
II.—CENTRAL BANKS.		
Calcutta—		
Central Co-operative Anti-Malarial Society, Ltd.	..	..
Co-operative Milk Societies Union, Ltd.	14,594	..
District 24-Parganas—		
Taki Central Co-operative Bank, Ltd.	11,369	..
Nimta Central Co-operative Bank, Ltd.	..	22,261
Diamond Harbour Central Co-operative Bank, Ltd.	5,868	..
Baraset Central Co-operative Bank, Ltd.	..	..
Gosava Central Co-operative Bank, Ltd.	19,564	..
District Nadia—		
Nadia Central Co-operative Bank, Ltd.	83,279	..
Kushtia Central Co-operative Bank, Ltd.	..	..
Meherpur Central Co-operative Bank, Ltd.	28,693	..
Ranaghat Central Co-operative Bank, Ltd.	14,016	..
Chaudanga Central Co-operative Bank, Ltd.	..	..
District Jessore—		
Jessore Central Co-operative Bank, Ltd.	15,216	30
Magura Central Co-operative Bank, Ltd.	16,691	..
Narail Central Co-operative Bank, Ltd.	..	34,962
Jhenidah Central Co-operative Bank, Ltd.	73	..
District Khulna—		
Khulna Central Co-operative Bank, Ltd.	12,715	1,97,186
Bagerhat Central Co-operative Bank, Ltd.	87,040	..
Raruli Central Co-operative Bank, Ltd.	4,750	..
District Murshidabad—		
Jangipur Central Co-operative Bank, Ltd.	30,074	..
Berhampore Central Co-operative Bank, Ltd.	1,77,132	3,036
Lalbagh Central Co-operative Bank, Ltd.	1,307	1,876
Kandi Central Co-operative Bank, Ltd.	14,795	..
District Howrah—		
Howrah Central Co-operative Bank, Ltd.	..	..
Uluberia Central Co-operative Bank, Ltd.	20,684	..
District Hooghly—		
Hooghly Central Co-operative Bank, Ltd.	1,83,299	..
Arambagh Central Co-operative Bank, Ltd.	2,451	..
District Bankura—		
Bankura Central Co-operative Bank, Ltd.	1,87,654	..
Bankura District Co-operative Industrial Union, Ltd.	920	..
Bishnupur Central Co-operative Bank, Ltd.	..	82

II.

debentures of the kind dealt with in columns 2 and 3 of Part I.				Repayment of loans by Societies.		
Other deposits and debentures falling due—				Estimated—		Actual in twelve months preceding present quarter.
In twelve months from commencement of present quarter.	In next twelve months.	In twelve months following.	In subsequent years.	In twelve months from commencement of present quarter.	In next twelve months.	
4	5	6	7	8	9	10
Rs.	Rs.	Rs.	Rs.	Rs.	Rs.	Rs.
64,31,000	13,70,000	31,12,000	1,66,541	62,26,563	9,38,000	1,85,880
..	..	..	..	..	..	..
16,700	..	..	..	2,000	1,409	1,000
91,701	7,260	2,821	1,39,097	50,000	60,000	9,455
9,275	4,831	..	..	2,040	14,291	5,151
46,526	11,176	..	..	10,000	10,000	12,432
62,320	74,150	53,175	..	91,395	95,420	..
45,622	..	..	..	77,637	1,355	1,07,655
1,63,107	94,113	2,00,000	2,00,000	1,00,000	1,00,000	26,196
12,636	9,244	8,832	1,67,810	80,000	90,000	5,771
31,946	22,388	15,312	1,42,560	40,000	30,000	12,960
51,640	55,382	52,379	..	7,500	10,000	5,851
10,036	..	..	1,73,467	10,000	10,000	5,383
37,500	1,78,251	44,090	2,63,545	19,936	20,774	17,862
99,165	1,35,140	1,52,225	1,16,103	36,000	40,000	4,997
1,03,176	78,778	29,270	1,23,941	3,35,814	100	7,817
8,071	550	400	8,390	6,500	6,000	5,025
71,011	2,30,220	..	..	45,635	50,825	26,084
89,324	97,439	..	..	32,780	8,424	23,605
400	1,41,481	..	37,657	20,000	30,000	11,629
56,805	30,215	33,106	21,942	16,675	15,325	10,307
3,68,279	2,06,924	1,47,960	34,276	29,002	20,703	15,622
..	..	2,46,054	..	1,000	3,000	1,916
15,982	11,651	2,885	54,181	5,000	5,000	1,840
..	..	..	..	100	100	60
6,967	..	14,500	13,900	6,000	7,000	5,783
1,67,800	1,33,600	1,74,900	..	1,04,549	1,24,700	66,411
8,030	5,666	16,758	182	12,000	20,000	3,867
66,510	54,001	65,603	16,995	60,000	80,000	15,338
41,768	154	..	..	5,000	8,000	158
3,840	3,835	7,070	..	4,500	5,000	2,394

PART

Name of Bank.	Deposits or	
	On current or Savings Bank account.	Deposits for not more than three months.
1	2	3
	Rs.	Rs.
District Birbhum—		
Rampurhat Central Co-operative Bank, Ltd.	1,06,896	..
Birbhum Central Co-operative Bank, Ltd.	1,54,959	..
Viswabharati Central Co-operative Bank, Ltd.	27,950	..
Nalhati Central Co-operative Bank, Ltd.	26,379	..
District Midnapore—		
Midnapore Central Co-operative Bank, Ltd.	3,12,971	588
Khelar-Balarampur Central Co-operative Bank, Ltd.	16,302	1,394
Beleberia Central Co-operative Bank, Ltd.	3,304	508
Tamluk Central Co-operative Bank, Ltd.	3,05,761	..
Mugberia Central Co-operative Bank, Ltd.	7,844	..
Balagoria Central Co-operative Bank, Ltd.	16,079	..
Ghatal Central Co-operative Bank, Ltd.	2,718	28
District Burdwan—		
Kalna Central Co-operative Bank, Ltd.	28,232	..
Burdwan Central Co-operative Bank, Ltd.	5,26,476	..
Katwa Central Co-operative Bank, Ltd.	11,343	..
Asansol Central Co-operative Bank, Ltd.	..	..
District Dacca—		
Dacca Central Co-operative Bank, Ltd.	60,264	..
Narayanganj Central Co-operative Bank, Ltd.	31,625	..
Raipura Central Co-operative Bank, Ltd.	4,772	..
Bikrampur Central Co-operative Bank, Ltd.	1,730	..
Manikganj Central Co-operative Bank, Ltd.	26,092	..
Ichhapura Central Co-operative Bank, Ltd.	..	..
Baira Central Co-operative Bank, Ltd.	1,444	..
Kaliganj Central Co-operative Bank, Ltd.	58	..
Tongi Central Co-operative Bank, Ltd.	257	..
Dacca Industrial Union, Ltd.	121	..
Dacca Co-operative Societies Milk Union, Ltd.	2,354	..
District Mymensingh—		
Mymensingh Central Co-operative Bank, Ltd	1,60,032	..
Jamalpur Central Co-operative Bank, Ltd.	23,517	..
Kishoreganj Central Co-operative Bank, Ltd.	41,418	..
Tangail Central Co-operative Bank, Ltd.	15,621	..
Netrokona Central Co-operative Bank, Ltd.	3,997	..
Sarishabari Central Co-operative Bank, Ltd.	70	..
Dhanbari Central Co-operative Bank, Ltd.	1	..
Pingna Central Co-operative Bank, Ltd.	1,417	..
Madarganj Central Co-operative Bank, Ltd.	30,006	..
Gaffargaon Central Co-operative Bank, Ltd.	320	..
Bhairab Central Co-operative Bank, Ltd.	427	..
District Faridpur—		
Faridpur Central Co-operative Bank, Ltd.	38,777	..
Madaripur Central Co-operative Bank, Ltd.	86,152	..
Goalundo Central Co-operative Bank, Ltd.	96,894	..
Gopalganj Central Co-operative Bank, Ltd.	24,485	..
District Bakarganj—		
Barisal Central Co-operative Bank, Ltd.	1,32,818	18,564
Patuakhali Central Co-operative Bank, Ltd.	4,859	..
Bhola Central Co-operative Bank, Ltd.	4,274	..
Khepupara Central Co-operative Bank, Ltd.	96	..
Mathbaria Central Co-operative Bank, Ltd.	2,066	..
Perojpur Central Co-operative Bank, Ltd.	673	8,997
District Chittagong—		
Chittagong Central Co-operative Bank, Ltd.	69,372	..
Cox's Bazar Central Co-operative Bank, Ltd.	4,690	..
Chittagong District Co-operative Industrial Union, Ltd.	196	..
Chittagong Milk Supply Union, Ltd.	..	..
Chittagong Zilla Samabay Krishi Samity, Ltd.	2,428	..

II—*continued.*

debentures of the kind dealt with in columns 2 and 3 of Part I.				Repayment of loans by Societies.		
Other deposits and debentures falling due—						
				Estimated—		
In twelve months from commencement of present quarter.	In next twelve months.	In twelve months following.	In subsequent years.	In twelve months from commencement of present quarter.	In next twelve months.	Actual in twelve months preceding present quarter.
4	5	6	7	8	9	10
Rs.	Rs.	Rs.	Rs.	Rs.	Rs.	Rs.
1,17,698	79,742	56,614	7,995	50,000	50,000	8,788
19,900	4,500	85,000	2,41,854	11,561	23,122	6,728
58,957	49,068	37,715	12,831	29,000	50,000	9,254
34,559	49,194	23,770	53,300	2,79,589	33,326	3,414
3,69,085	8,100	..	44,558	1,45,000	1,00,000	1,04,326
4,849	28,995	49,038	11,948	30,000	35,000	22,227
5,143	10,276	62,891	..	9,000	10,000	9,329
3,44,908	..	..	..	2,44,295	6,985	57,173
19,461	1,306	53,365	..	20,000	25,000	17,051
24,306	9,545	27,108	20,120	25,000	25,000	24,746
18,598	5,765	27,807	928	20,000	25,000	17,397
12,426	7,919	2,19,768	16,729	11,000	25,000	29,679
8,18,931	6,09,894	4,00,200	50,970	84,910	93,974	56,963
14,570	28,332	24,291	640	7,000	8,000	4,631
31,360	15,511	31,476	..	39,372	14,828	11,518
3,36,000	1,78,000	1,80,000	85,185	60,000	60,000	42,163
92,843	46,929	21,978	2,297	20,000	25,000	18,106
46,455	11,388	2,428	61,207	16,500	16,500	34,166
23,332	18,179	16,571	..	10,000	15,000	3,725
1,09,464	80,000	..	..	1,00,000	1,92,049	21,012
11,915	4,868	3,312	8,196	15,000	20,000	4,275
12,744	..	..	..	8,000	8,500	8,651
1,150	26,000	5,100	36,559	25,000	28,000	21,749
33,056	14,054	7,068	47,281	30,000	30,000	1,137
..	..	..	..	6,500	7,000	1,973
..	..	..	..	10,000	5,823	1,008
15,19,558	52,123	4,300	19,497	230	..	18,765
39,887	49,884	3,175	1,55,519	35,000	45,000	29,359
46,836	49,074	54,317	..	8,000	10,000	5,404
..	..	43,415	2,71,932	20,000	20,000	17,000
40,677	3,640	1,202	8,694	10,000	15,000	7,148
10,091	8,000	289	..	5,000	5,000	2,223
3,451	..	..	520	10,000	20,000	3,041
41,283	5,000	..	2,596	10,000	10,000	9,986
4,137	3,833	267	1,530	10,000	12,000	7,816
9,827	1,254	..	2,414	7,000	8,000	5,604
..	..	..	..	2,730	1,888	1,543
3,31,553	15,931	21,533	14,541	12,000	13,000	11,442
85,635	27,844	11,981	33,655	50,000	50,000	47,480
55,288	40,823	35,545	87,610	8,000	10,000	6,637
2,05,770	18,879	12,015	8,140	15,000	15,000	15,334
1,92,735	8,98,363	56,098	1,30,852	90,000	85,000	1,21,926
73,743	8,189	639	12,312	5,000	8,000	3,245
24,406	* 8,205	5,728	28,285	9,000	21,000	2,286
11,368	..	..	4,608	10,000	15,000	8,474
6,067	3,775	260	17,674	10,000	10,000	4,457
31,000	16,815	13,700	7,001	3,000	5,000	4,631
1,39,929	38,145	28,332	500	1,45,500	70,000	1,25,432
34,701	..	..	6,447	10,000	10,000	7,756
..	..	..	..	13,600	13,500	11,300
..	..	..	.. *	3,800	207	* 2,985
..	..	..	517	6,000	7,000	5,198

PART

Name of Bank.	Deposits or	
	On current or Savings Bank account.	Deposits for not more than three months.
1	2	3
II.—CENTRAL BANKS—*concld.*	Rs.	Rs.
District Noakhali—		
Noakhali Central Co-operative Bank, Ltd.	23,960	..
Feni Central Co-operative Bank, Ltd.	89,065	1,806
Raipura Central Co-operative Bank, Ltd.	..	164
Lakshmipur Central Co-operative Bank, Ltd.	139	..
Hatiya Central Co-operative Bank, Ltd.	701	..
Sandwip Central Co-operative Bank, Ltd.	19,816	..
Chaumuhani Co-operative Industrial Union, Ltd.	..	..
Raipura Co-operative Industrial Union, Ltd.	63	..
District Tippera—		
Comilla Central Co-operative Bank, Ltd.	31,034	..
Daudkandi-Gouripur Central Co-operative Bank, Ltd.	816	..
Tippera Raj Central Co-operative Bank, Ltd.	7,514	..
Laksam Central Co-operative Bank, Ltd.	1,732	1,978
Brahmanbaria Central Co-operative Bank, Ltd.	12,111	153
Nabinagar Central Co-operative Bank, Ltd.	808	..
Chandpur Central Co-operative Bank, Ltd.	26,929	..
Matlab Central Co-operative Bank, Ltd.	7,523	..
District Rajshahi—		
Rajshahi Central Co-operative Bank, Ltd.	61,396	..
Nator Central Co-operative Bank, Ltd.	..	..
Naogaon Central Co-operative Bank, Ltd.	10,945	..
Puthia Central Co-operative Bank, Ltd.	6,327	..
Naogaon Co-operative Industrial Union, Ltd.	335	..
Naogaon Co-operative Milk Societies Union, Ltd.	..	..
District Pabna—		
Pabna Central Co-operative Bank, Ltd.	4,92,646	..
Ullapara Central Co-operative Bank, Ltd.	15,151	..
Serajganj Central Co-operative Bank, Ltd.	3,08,633	..
Shahzadpur Central Co-operative Bank, Ltd.	17,268	..
Bhanguria Central Co-operative Bank, Ltd.	3	..
District Dinajpur—		
Dinajpur Central Co-operative Bank, Ltd.	16,052	..
Balurghat Central Co-operative Bank, Ltd.	28,527	..
Thakurgaon Central Co-operative Bank, Ltd.	10,363	..
District Rangpur—		
Gaibandha Central Co-oprative Bank, Ltd.	20,772	..
Kurigram Central Co-operative Bank, Ltd.	6,362	..
Nilphamari Central Co-operative Bank, Ltd.	42,908	..
Rangpur Central Co-operative Bank, Ltd.	22,636	..
District Bogra—		
Bogra Central Co-operative Bank, Ltd.	2,96,776	..
Khanjanpur Central Co-operative Bank, Ltd.	..	..
Padmapara Central Co-operative Bank, Ltd.	2,471	136
Nawadaboga Central Co-operative Bank, Ltd.	690	..
Chandanbaisa Central Co-operative Bank, Ltd.	..	..
District Jalpaiguri—		
Jalpaiguri Central Co-operative Bank, Ltd.	5,149	..
District Malda—		
Malda Central Co-operative Bank, Ltd.	..	..
Chanchal Raj Central Co-operative Bank, Ltd.	18,997	..
Nawabganj Central Co-operative Bank, Ltd.	..	..
Harishchandrapur Central Co-operative Bank, Ltd.	11,062	..
Bengal Co-operative Silk Union, Ltd.	..	..
District Darjeeling—		
Darjeeling Central Co-operative Bank, Ltd.	695	..
Kalimpong Central Co-operative Bank, Ltd.	23,431	..
Pedong Central Co-operative Bank, Ltd.	2,809	..
Darjeeling Co-operative Milk Societies Union, Ltd.	7,293	..
Total of Central Banks	49,61,538	2,93,783
Total of Provincial and Central Banks	70,11,258	3,09,783

II—*concluded.*

debentures of the kind dealt with in columns 2 and 3 of Part I.				Repayment of loans by Societies.		
Other deposits and debentures falling due—				Estimated—		Actual in twelve months preceding present quarter.
In twelve months from commencement of present quarter.	In next twelve months.	In twelve months following.	In subsequent years.	In twelve months from commencement of present quarter.	In next twelve months.	
4	5	6	7	8	9	10
Rs.	Rs.	Rs.	Rs.	Rs.	Rs.	Rs.
92,438	73,393	90,173	5,148	25,000	30,000	20,587
44,312	85,790	23,496	2,41,312	20,000	20,000	9,804
2,510	203	117	479	10,000	15,000	8,618
34,959	933	3,452	5,359	5,000	6,000	4,556
41,172	456	41	419	5,000	10,000	3,613
25,712	26,734	26,380	3,466	30,000	27,000	12,510
740	..	..	..	8,000	10,000	4,854
1,393	..	..	..	..	..	..
3,47,984	72,794	90,636	60,311	1,00,000	1,25,000	79,115
4,552	..	..	4,412	50,000	50,000	36,538
39,166	6,725	85,376	58,271	25,000	35,000	5,872
683	1,147	1,985	2,200	10,000	10,000	14,539
1,76,083	30,933	20,510	13,519	1,00,000	1,00,000	19,537
5,221	1,477	1,166	16,815	10,000	15,000	5,713
1,79,380	97,319	49,115	55,851	8,000	10,000	14,580
6,000	8,000	5,000	7,728	45,000	45,000	43,150
78,892	44,559	21,240	57,569	50,000	40,000	9,272
1,29,887	4,190	..	..	4,000	5,000	3,753
1,47,335	80,696	26,291	7,858	16,000	15,000	12,888
82,966	8,859	19,511	2,531	1,500	1,600	1,402
..	..	..	..	800	700	162
..	69	..	..	..	250	..
..	..	..	..	30,000	35,000	24,011
99,940	22,824	7,711	7,348	6,000	10,000	3,563
..	..	..	..	30,000	40,000	12,642
1,07,934	962	889	1,249	1,13,766	100	..
510	88	2,251	642	10,000	15,000	6,084
62,637	5,179	146	..	4,000	4,000	1,485
67,542	41,348	47,746	..	1,29,757	28,629	8,470
12,221	11,520	10,928	36,690	30,075	31,899	7,547
..	9,101	3,810	1,82,946	25,000	30,000	24,109
1,745	5,777	7,000	40,734	1,559	325	4,742
13,665	13,040	4,093	26,458	1,70,160	1,000	45
2 94,895	..	..	..	10,000	10,000	3,838
1,70,270	1,85,760	86,095	30,113	1,00,000	1,25,000	77,229
11,935	27,433	26,796	1,200	6,785	7,642	2,174
3,346	1,084	22,316	2,197	6,000	7,000	2,618
33,501	1,914	39	25,141	1,000	1,000	1,936
1,000	..	..	520	23,000	21,000	13,542
20,358	8,508	2,240	1,807	23,000	25,000	30,667
18,670	24,354	15,555	1,13,182	21,950	14,372	7,834
31,694	39,122	16,987	15,111	4,051	5,322	4,977
18,110	..	.	6,098	10,000	52,093	600
..	..	77,103	7,797	2,000	2,500	1,767
2,500	2,500	2,500	20,000	2,000	2,000	1,967
1,875	..	..	1,895	700	1,000	679
1,14,282	24,354	11,780	11,022	7,000	10,000	1,082
15,689	2,810	3,300	3,250	8,500	8,000	9,383
..	..	..	..	30	20	..
97,02,698	50,97,952	37,12,680	41,41,531	13,21,096	33,45,471	21,02,604
1,61,33,698	64,67,952	64,24,680	43,11,075	1,05,17,659	42,83,471	22,88,484

PART III.

Name of Bank.	Portion of deposits or debentures of the kind dealt with in columns 2 and 3 of Part I falling due in each quarter in twelve months from commencement of present quarter (4th column of Part II).				Repayments of loans by Societies estimated in each quarter in twelve months from commencement of present quarter (column 8 of Part II).			
	1st quarter.	2nd quarter.	3rd. quarter.	4th quarter.	1st quarter.	2nd quarter.	3rd quarter.	4th quarter.
1	2	3	4	5	6	7	8	9
	Rs.	Rs.	Rs.	Rs.	Rs.	Rs.	Rs.	Rs.
I.—PROVINCIAL BANK.								
Bengal Provincial Co-operative Bank, Ltd. ..	13,75,000	30,41,000	14,64,000	5,51,000	46,30,563	29,000	7,22,000	8,45,000
II.—CENTRAL BANKS.								
Calcutta—								
Central Co-operative Anti-Malarial Society, Ltd. ..	..	..	..	..	..	..	..	..
Co-operative Milk Societies Union, Ltd. ..	200	10,000	4,200	2,300	150	250	900	700
District 24-Parganas—								
Taki Central Co-operative Bank, Ltd.	22,738	7,327	40,776	20,863	4,000	3,000	28,000	15,000
Nimta Central Co-operative Bank, Ltd.	..	9,275	..	..	510	510	510	510
Diamond Harbour Central Co-operative Bank, Ltd. ..	37,892	5,308	941	2,385	4,000	500	1,500	4,000
Barasat Central Co-operative Bank, Ltd. ..	15,580	12,324	18,520	15,896	25,940	16,325	26,580	22,550
Gosava Central Co-operative Bank, Ltd. ..	920	43,696	414	592	3,071	..	38,965	30,601
District Nadia—								
Nadia Central Co-operative Bank, Ltd.	63,107	30,000	40,000	30,000	20,000	20,000	30,000	30,000
Kushtia Central Co-operative Bank, Ltd.	..	..	12,636	..	13,000	15,000	40,000	12,000
Meherpur Central Co-operative Bank, Ltd. ..	9,888	6,650	11,143	4,265	3,000	3,000	21,000	13,000
Ranaghat Central Co-operative Bank, Ltd. ..	14,500	13,200	10,500	13,440	263	500	1,500	5,237
Chuadanga Central Co-operative Bank, Ltd. ..	9,476	1,160	..	..	1,500	1,500	4,000	3,000
District Jessore—								
Jessore Central Co-operative Bank, Ltd. ..	4,255	26,335	1,900	5,010	1,800	3,100	6,420	8,616
Magura Central Co-operative Bank, Ltd. ..	23,770	22,335	9,735	43,325	6,000	3,000	12,000	16,000
Narail Central Co-operative Bank, Ltd.	21,433	22,972	31,608	27,163	77,436	88,534	75,891	93,953
Jhenidah Central Co-operative Bank, Ltd. ..	2,808	3,063	..	2,200	2,500	500	2,000	1,500
District Khulna—								
Khulna Central Co-operative Bank, Ltd. ..	7,577	..	63,434	..	25,630	3,107	1,383	15,515
Bagerhat Central Co-operative Bank, Ltd. ..	13,744	15,681	33,160	26,739	7,650	7,550	5,814	11,766
Raruli Central Co-operative Bank, Ltd.	400	..	..	..	4,000	7,000	8,000	1,000
District Murshidabad—								
Jangipur Central Co-operative Bank, Ltd. ..	17,405	14,000	13,400	12,000	3,320	5,620	4,370	3,365
Berhampore Central Co-operative Bank, Ltd. ..	95,566	58,042	1,49,076	65,595	10,702	1,847	12,066	4,387
Lalbagh Central Co-operative Bank, Ltd. ..	..	..	..	..	60	150	50	734
Kandi Central Co-operative Bank, Ltd. ..	3,112	4,345	2,211	1,314	500	500	500	3,500
District Howrah—								
Howrah Central Co-operative Bank, Ltd.	..	..	..	..	25	25	25	25
Uluberia Central Co-operative Bank, Ltd. ..	..	100	2,167	4,700	2,000	800	700	2,500
District Hooghly—								
Hooghly Central Co-operative Bank, Ltd.	25,300	57,700	64,100	20,700	42,024	15,524	18,266	28,735
Arambagh Central Co-operative Bank, Ltd. ..	6,104	306	1,166	1,054	3,000	2,000	3,000	4,000
District Bankura—								
Bankura Central Co-operative Bank, Ltd. ..	18,368	23,785	9,057	15,300	13,000	12,000	16,000	19,000
Bankura District Co-operative Industrial Union, Ltd.	13,168	12,730	6,270	9,600	700	300	1,500	2,500
Bishnupur Central Co-operative Bank, Ltd. ..	1,350	2,490	..	..	1,500	1,000	500	1,500
District Birbhum—								
Rampurhat Central Co-operative Bank, Ltd. ..	43,776	43,409	14,451	16,062	1,000	4,000	5,000	40,000
Birbhum Central Co-operative Bank, Ltd. ..	9,000	1,000	9,200	100	6,400	2,200	300	2,661
Viswabharati Central Co-operative Bank, Ltd. ..	12,982	16,363	6,002	23,610	1,000	1,000	3,000	24,000
Nalhati Central Co-operative Bank, Ltd.	8,164	5,833	16,715	3,847	50,000	15,000	1,90,000	24,589
District Midnapore—								
Midnapore Central Co-operative Bank, Ltd. ..	64,904	2,20,308	56,023	27,850	55,000	57,000	3,000	30,000
Kholar Balarampur Central Co-operative Bank, Ltd. ..	968	1,722	1,404	755	7,000	5,000	8,000	10,000
Beleboria Central Co-operative Bank, Ltd. ..	..	140	5,003	..	3,500	1,000	1,000	3,500
Tamluk Central Co-operative Bank, Ltd.	1,35,503	94,546	55,697	59,162	2,39,304	1,476	1,075	2,440
Mugberia Central Co-operative Bank, Ltd. ..	5,409	4,904	6,383	2,765	6,000	2,000	1,500	10,500
Balagoria Central Co-operative Bank, Ltd. ..	..	21,056	600	2,650	6,000	4,000	5,000	10,000
Ghatal Central Co-operative Bank, Ltd.	4,026	9,772	1,904	2,896	4,000	3,000	6,000	7,000
District Burdwan—								
Kalna Central Co-operative Bank, Ltd.	..	3,500	3,463	5,463	4,000	3,000	2,000	2,000
Burdwan Central Co-operative Bank, Ltd. ..	2,29,771	2,51,413	1,79,365	1,58,382	22,591	11,065	..	51,254
Katwa Central Co-operative Bank, Ltd.	3,898	1,158	327	9,187	1,500	500	2,000	3,000
Asansol Central Co-operative Bank, Ltd.	7,935	422	2,533	20,470	33,099	..	..	6,273
District Dacca—								
Dacca Central Co-operative Bank, Ltd.	1,35,000	99,000	37,000	65,000	3,000	12,000	40,000	5,000
Narayanganj Central Co-operative Bank, Ltd. ..	23,487	33,022	28,124	8,210	1,000	5,000	10,000	4,000
Raipura Central Co-operative Bak, Ltd. ..	16,106	12,545	16,454	1,350	..	5,000	10,000	1,500
Bikrampur Central Co-operative Bank, Ltd. ..	22,359	609	..	364	500	4,000	4,000	1,500
Manikganj Central Co-operative Bank, Ltd. ..	20,000	25,464	40,000	24,000	10,000	20,000	40,000	30,000
Ichhapura Central Co-operative Bank, Ltd. ..	1,984	2,549	175	8,207	1,500	3,000	5,000	5,500
Baira Central Co-operative Bank, Ltd.	11,623	274	847	..	500	2,000	4,000	1,500
Kaliganj Central Co-operative Bank, Ltd. ..	1,130	..	..	20	6,000	4,000	13,000	2,000
Tangi Central Co-operative Bank, Ltd.	11,310	2,637	3,983	15,126	4,000	9,000	12,000	5,000
Dacca Co-operative Industrial Union, Ltd. ..	..	..	..	..	500	2,500	2,000	1,500
Dacca Co-operative Milk Societies Union, Ltd. ..	..	..	..	..	2,000	4,000	3,000	1,000
District Mymensingh—								
Mymensingh Central Co-operative Bank, Ltd. ..	14,81,117	15,412	9,075	63,954	..	..	230	..
Jamalpur Central Co-operative Bank, Ltd. ..	15,845	13,726	..	10,316	1,000	10,000	16,000	8,000
Kishoreganj Central Co-operative Bank, Ltd. ..	27,365	8,747	7,434	3,300	500	1,000	5,000	1,500
Tangail Central Co-operative Bank, Ltd.	..	..	..	..	2,000	6,000	8,000	4,000
Netrokona Central Co-operative Bank, Ltd. ..	9,467	11,023	11,818	8,369	500	1,000	6,000	2,500
Sariabari Central Co-operative Bank, Ltd. ..	9,243	384	..	464	..	1,000	3,000	1,000
Dhanbari Central Co-operative Bank, Ltd. ..	3,451	..	..	..	200	100	7,000	2,700
Pingna Central Co-operative Bank, Ltd.	31,283	..	..	10,000	500	3,000	4,500	2,000
Madarganj Central Co-operative Bank, Ltd. ..	2,175	822	550	590	..	1,800	6,000	3,000
Gaffargaon Central Co-operative Bank, Ltd. ..	4,611	1,340	..	3,876	100	600	5,000	1,300
Bhairab Central Co-operative Bank, Ltd.	..	..	..	..	..	500	2,230	..

PART III—*concluded.*

Name of Bank.	Portion of deposits or debentures of the kind dealt with in columns 2 and 3 of Part I falling due in each quarter in twelve months from commencement of present quarter. (4th column of Part II).				Repayments of loans by Societies estimated in each quarter in twelve months from commencement of present quarter (column 8 of Part II).			
	1st quarter.	2nd quarter.	3rd quarter.	4th quarter.	1st quarter.	2nd quarter.	3rd quarter.	4th quarter.
1	2	3	4	5	6	7	8	9
II.—CENTRAL BANKS—*concld.*	Rs.	Rs.	Rs.	Rs.	Rs.	Rs.	Rs.	Rs.
District Faridpur—								
Faridpur Central Co-operative Bank, Ltd. ..	3,08,466	9,618	3,371	10,103	300	2,000	8,000	1,700
Madaripur Central Co-operative Bank, Ltd. ..	22,100	28,064	23,352	12,020	2,000	18,000	25,000	5,000
Goalundo Central Co-operative Bank, Ltd. ..	12,633	11,825	13,542	17,288	2,000	1,000	2,000	3,000
Gopalganj Central Co-operative Bank, Ltd. ..	1,87,273	4,040	8,270	6,187	2,000	5,000	3,000	5,000
District Bakarganj—								
Barisal Central Co-operative Bank, Ltd. ..	1,15,611	28,652	31,180	17,283	20,000	30,000	20,000	20,000
Patuakhali Central Co-operative Bank, Ltd. ..	63,010	7,210	3,101	422	250	250	1,500	3,000
Bhola Central Co-operative Bank, Ltd. ..	8,000	4,000	2,678	9,728	2,073	1,309	800	4,818
Khepupara Central Co-operative Bank, Ltd ..	11,368	..	.. 59	8	1,000	..	2,500	6,500
Mathbaria Central Co-operative Bank, Ltd ..	..	6,000			3,000	500	500	6,000
Perojpur Central Co-operative Bank, Ltd. ..	5,000	6,000	8,000	12,000	600	500	800	1,100
District Chittagong—								
Chittagong Central Co-operative Bank, Ltd.	38,379	46,555	18,975	36,020	40,500	47,000	20,000	38,000
Cox's Bazar Central Co-operative Bank, Ltd. ..	2,557	6,631	9,628	15,885	3,000	1,000	1,000	5,000
Chittagong District Co-operative Industrial Union, Ltd.	..	..	..	..	2,500	3,000	4,000	4,100
Chittagong Central Co-operative Milk Supply Union, Ltd.	..	..	..	..	1,000	1,000	800	1,000
Chittagong Zilla Samabay Krishi Samity, Ltd. ..	..		..	..	..	..	5,000	1,000
District Noakhali—								
Noakahli Central Co-operative Bank, Ltd. ..	11,595	30,929	18,277	31,687	3,000	6,000	10,000	6,000
Feni Central Co-operative Bank, Ltd. ..	8,472	23,338	4,987	9,515	3,000	5,000	6,000	6,000
Raipura Central Co-operative Bank, Ltd. ..	1,990	200	100	220	700	2,000	4,300	3,000
Laksmipur Central Co-operative Bank, Ltd. ..	19,176	708	14,842	173	1,000	1,500	1,500	1,000
Hatiya Central Co-operative Bank, Ltd. ..	88,581	2,547	3	41	2,000	..	500	2,500
Sandwip Central Co-operative Bank, Ltd. ..	4,553	9,130	8,576	3,453	8,000	3,000	6,000	13,000
Chaumuhani Co-operative Industrial Union, Ltd.	370	370	..	..	2,000	1,500	2,500	2,000
Raipura Co-operative Industrial Union, Ltd. ..	1,393	..	..	..	..	..	..	..
District Tippera—								
Comilla Central Co-operative Bank, Ltd. ..	3,09,880	2,208	14,348	21,482	5,000	15,000	50,000	30,000
Daudkandi-Gouripur Central Co-operative Bank, Ltd.	4,191	142	64	158	2,000	20,000	25,000	3,000
Tippera [illegible] Central Co-operative Bank, Ltd. ..	21,021	6,646	3,744	7,755	5,000	3,000	40,000	8,000
Laksam Central Co-operative Bank, Ltd. ..		147	235	301	2,500	2,500	2,000	3,000
Brahmanbaria Central Co-operative Bank, Ltd. ..	1,62,500	6,416	948	6,120	5,000	25,000	50,000	20,000
Nabinagar Central Co-operative Bank, Ltd. ..	3,856	507	642	219	644	356	2,000	7,000
Chandpur Central Co-operative Bank, Ltd. ..	1,12,532	24,616	26,114	16,118	1,000	1,000	4,000	2,000
Matlab Central Co-operative Bank, Ltd. ..	..	2,000	4,000	..	1,000	20,000	20,000	4,000
District Rajshahi—								
Rajshahi Central Co-operative Bank, Ltd. ..	27,280	24,797	16,725	10,081	5,000	10,000	20,000	15,000
Nator Central Co-operative Bank, Ltd. ..	1,26,987	1,400	1,000	500	400	600	1,000	2,000
Naogaon Central Co-operative Bank, Ltd. ..	47,835	36,000	34,000	30,000	5,000	4,000	3,000	4,000
Puthia Central Co-operative Bank, Ltd. ..	70,050	5,830	5,918	568	200	200	500	600
Naogaon Co-operative Industrial Union, Ltd. ..	..	..	..	..	100	150	200	350
Naogaon Co-operative Milk Societies Union, Ltd. ..	..	..	..	..	..	..	..	..
District Pabna—								
Pabna Central Co-operative Bank, Ltd.	..	..	..	..	3,500	3,500	14,000	9,000
Ullapara Central Co-operative Bank, Ltd. ..	10,238	33,090	27,867	28,745	500	2,000	3,000	500
Serajganj Central Co-operative Bank, Ltd. ..	..	..	..	..	2,000	8,000	15,000	5,000
Shahzadpur Central Co-operative Bank, Ltd. ..	1,00,000	7,000	600	334	1,13,766	..	..	..
Bhanguria Central Co-operative Bank, Ltd. ..	415	125	..	..	2,000	2,000	3,000	3,000
District Dinajpur—								
Dinajpur Central Co-operative Bank, Ltd. ..	56,641	3,000	2,000	996	1,000	500	500	2,000
Balurghat Central Co-operative Bank, Ltd. ..	12,053	15,608	24,303	15,428	1,20,757	..	..	..
Thakurgaon Central Co-operative Bank, Ltd. ..	2,598	6,353	1,187	2,086	7,000	4,560	10,655	8,420
District Rangpur—								
Gaibandha Central Co-operative Bank, Ltd. ..	..	..	..	..	2,000	10,000	12,000	1,000
Kurigram Central Co-operative Bank, Ltd. ..	..	400	1,295	50	500	1,000	2,500	550
Nilphamari Central Co-operative Bank, Ltd. ..	1,582	600	6,153	5,330	1,70,460	..	..	..
Rangpur Central Co-operative Bank, Ltd. ..	2,94,895	..	..	..	2,500	2,500	2,500	2,500
District Bogra—								
Bogra Central Co-operative Bank, Ltd.	69,953	43,093	28,406	28,818	20,000	27,000	28,000	25,000
Khanjanpur Central Co-operative Bank, Ltd. ..	4,300	3,522	1,172	2,941	756	820	2,862	2,347
Padmapara Central Co-operative Bank, Ltd. ..	93	902	2,351	..	500	2,500	2,000	1,000
Nawabganj Central Co-operative Bank, Ltd. ..	30,946	232	96	2,227	250	500	125	125
Chandanbaisa Central Co-operative Bank, Ltd. ..	..	1,000	..	..	2,000	10,000	8,000	9,000
District Jalpaiguri—								
Jalpaiguri Central Co-operative Bank, Ltd. ..	7,576	3,950	5,082	3,750	4,000	3,000	7,000	9,000
District Malda—								
Malda Central Co-operative Bank, Ltd.	4,200	10,970	2,625	875	8,180	2,035	5,459	6,298
Chanchal Raj Central Co-operative Bank, Ltd. ..	6,341	8,314	9,983	7,056	658	553	1,075	1,765
Nawabganj Central Co-operative Bank, Ltd. ..	18,110	..	..	..	2,000	1,500	2,500	4,000
Harishchandrapur Central Co-operative Bank, Ltd. ..	..	..	..	..	250	..	750	1,000
Bengal Co-operative Silk Union, Ltd.	..	..	..	2,500	400	860	400	400
District Darjeeling—								
Darjeeling Central Co-operative Bank, Ltd. ..	1,875	..	..	..	100	100	300	200
Kalimpong Central Co-operative Bank, Ltd. ..	47,297	16,640	11,744	38,571	1,000	500	2,500	3,000
Pedong Central Co-operative Bank, Ltd. ..	6,088	9,000	..	..	2,056	1,500	1,000	3,944
Darjeeling Co-operative Milk Societies Union, Ltd. ..	..	..	..	..	..	10	10	10
Total of Central Banks	61,60,921	18,04,424	14,42,578	12,94,775	13,56,381	7,34,266	12,32,811	9,97,638
Total of Provincial and Central Banks ..	95,35,921	48,45,424	29,06,578	18,45,775	59,86,944	7,63,266	19,54,811	18,42,638

CORPORATION OF CALCUTTA.

NOTICE.

Central Municipal Office, the 24th June 1936.

By-election to elect a Councillor of the Corporation of Calcutta for the Special Constituency comprising the Bengal Chamber of Commerce.

In compliance with provisions of sub section (2) of section 28 of Act III (B. C.) of 1923 and rule 15 (2) of the Rules made by the local Government under section 30 of the said Act, it is hereby notified that Mr. G. S. G. Vernon has been declared duly elected as a Councillor of the Corporation of Calcutta for the Special Constituency comprising the Bengal Chamber of Commerce.

J. C. MUKERJEA,
Chief Executive Officer.

CALCUTTA IMPROVEMENT TRUST.

NOTICE.

Calcutta, the 22nd June 1936.

Notice is hereby given under section 7 (4) of the Calcutta Improvement Act, 1911, as amended up to 1931, that at their meeting held on 19th June 1936, the Councillors of the Corporation of Calcutta, elected by constituencies other than the Special Constituencies, elected Kumar Biswanath Roy of 29, Barrackpore Trunk Road, Calcutta, as their representative on the Board of Trustees for the Improvement of Calcutta, *vice* Mr. Probhudoyal Himatsingka, whose term of office expired on the 22nd June 1936.

C. V. HINGSTON, *Chairman (offg.).*

Printed and published by the Superintendent, Government Printing, Bengal Government Press, Alipore, Bengal, on the 2nd July 1936.

Registered No. C207

23-7-36

No. 28 of 1936

The Calcutta Gazette

Published by Authority

THURSDAY, JULY 9, 1936.

CONTENTS:

	Page.
Part I.—Orders and Notifications by the Governor of Bengal, the Government of Bengal, the High Court, Government Treasury, etc.	1669—1710
Part IA.—Orders and Notifications by the Government of India republished for general information	183—185
Part IB.—Educational Notices ..	1113—1147
Part II.—Advertisements ..	655—678
Part III.—Acts of the Bengal Legislative Council	*Nil*
Part IV.—Bills introduced in the Bengal Legislative Council, Reports of Select Committees presented or to be presented to that Council, and Bills published before introduction in that Council ..	*Nil*
Part V.—Acts of the Indian Legislature assented to by the Governor-General and Ordinances promulgated under section 72 of the Government of India Act ..	*Nil*
Part VI.—Bills introduced in the Council of State and Legislative Assembly, Reports of Select Committees presented to the Council and Assembly and Bills published under rule 18 of the Indian Legislative Rules	*Nil*
Supplement No. 28 :—	
Statement showing donations and endowments of the Presidency Division during the year 1935	957
Weekly Gauge Readings—Corporation of Calcutta Notice—Weekly Weather and Crop Report—Weekly Vital Statistics—Cotton Ginning and Pressing	958—966

PART I

Orders and Notifications by the Governor of Bengal, the Government of Bengal, the High Court, Government Treasury, etc.

Orders by His Excellency the Governor of Bengal.

No. 5473A.—3rd July 1936.—Whereas a vacancy has occurred in the Bengal National Chamber of Commerce constituency of the Bengal Legislative Council by reason of the death of Mr. Surendra Nath Law, His Excellency the Governor is pleased, in pursuance of sub-rule (*1*) of rule 26 of the Bengal Electoral Rules, to call upon the said constituency to elect a person for the purpose of filling the vacancy by the 16th September 1936.

No. 5545A.—4th July 1936.—Under the provisions of section 93 of the Government of India Act, His Excellency the Governor is pleased to accept the resignation tendered by Mr. F. C. Guthrie of his office of member of the Bengal Legislative Council.

No. 5548A.—4th July 1936.—Whereas a vacancy has occurred in the Presidency and Burdwan (European) constituency of the Bengal Legislative Council by reason of the resignation by Mr. F. C. Guthrie, His Excellency the Governor is pleased, in pursuance of sub-rule (*1*) of rule 26 of the Bengal Electoral Rules, to call upon the said constituency to elect a person for the purpose of filling the vacancy by the 20th September 1936

H J. TWYNAM,
Chief Secy. to the Govt. of Bengal (offg.).

Orders by the Government of Bengal.

No. 5606A.

Appointments and Transfers.

GENERAL.

Bakarganj-Chittagong.—No. 1240A.D.—22nd June 1936.—In exercise of the powers conferred by sub-section (*2*) of section 10 of the Code of Criminal Procedure, 1898 (Act V of 1898), the Governor in Council is pleased to appoint Mr. H. Banerjee, I.C.S., officiating Additional District and Sessions Judge, Bakarganj, to be Additional District Magistrate, Chittagong, and to direct that he shall have, during the period he is so employed, all the powers of a District Magistrate under the said Code and under all other laws in force in that district.

Midnapore-Bogra.—No. 1316A.D.—26th June 1936.—Maulvi Saleh Abdur Rahim, Deputy Magistrate and Deputy Collector, Midnapore, is transferred to the headquarters station of the Bogra district.

Dacca-Jalpaiguri.—No. 1329A.D.—26th June 1936.—Mr. W. McC. Sharpe, I.C.S., District and Sessions Judge, Dacca, is appointed temporarily to be Additional District and Sessions Judge, Jalpaiguri.

Rajshahi Division.—No. 5326A.—30th June 1936.—The Sub-Deputy Collectors, named below, are posted to the Rajshahi Division on relinquishing charge of their settlement duty :—

Maulvi Nizamuddin Ahmad.

Babu Krishna Chandra Banarji.

Babu Prafulla Kumar Mandal.

Maulvi A. M. S. Mahmood.

Dacca Division.—No. 5331A.—30th June 1936.—Maulvi Muhammad Husain Ali (No. II), Sub-Deputy Collector, is posted to the Dacca Division on relinquishing charge of his settlement duty.

Presidency Division.—No. 5336A.—30th June 1936.—Babu Phanindra Mohan Datta, Sub-Deputy Collector, is posted to the Presidency Division on relinquishing charge of his settlement duty.

Burdwan Division.—No. 5341A.—30th June 1936.—The Sub-Deputy Collectors named below are posted to the Burdwan Division on relinquishing charge of their settlement duty :—

Babu Pranabendu Prasad Pal.

Maulvi Saiyid Abu Nasir Muhammad Ali Akbar.

Chittagong Division.—No. 5346A.—30th June 1936.—Babu Sudhangsu Bimal Das Gupta, Sub-Deputy Collector, on leave, is posted to the Chittagong Division.

Dacca-Rajshahi Divisions.—No. 5396A.—30th June 1936.—Mr. L. R. Fawcus, I.C.S., officiating Commissioner of the Dacca Division, is appointed to act, until further orders, as Commissioner of the Rajshahi Division.

24-Parganas. — No. 5409A. — 1st July 1936.—The orders of the 20th March 1934 appointing Mr. R. H. Parker, I.C.S., Commissioner for Workmen's Compensation, Bengal, to act, in addition to his duties, as an Additional District and Sessions Judge, 24-Parganas, are cancelled, with effect from the 1st July 1936.

24-Parganas. —No. 5488A.—2nd July 1936.—Mr. B. K. Basu, I.C.S., on leave, is appointed temporarily to be an Additional District and Sessions Judge, 24-Parganas.

24-Parganas.—No. 5480A.—3rd July 1936.—Maulvi A. K. Bazlul Karim, Deputy Magistrate and Deputy Collector, Diamond Harbour, 24-Parganas, is appointed temporarily to have charge of that subdivision.

Jessore.—No. 5516A.—4th July 1936.—Babu Pran Kumar Mukharji, Deputy Magistrate and Deputy Collector, on leave, is posted to the headquarters station of the Jessore district.

Darjeeling.—No. 5520A.—4th July 1936.—Maulvi Khondkar Ali Taib, Deputy Magistrate and Deputy Collector, on leave, is posted to the headquarters station of the Darjeeling district.

24-Parganas.—No. 5524A.—4th July 1936.—Babu Surendra Mohan Bhaumik, Deputy Magistrate and Deputy Collector, on leave, is posted to the headquarters station of the 24-Parganas district.

Bogra-Midnapore.—No. 5528A.—4th July 1936.—Maulvi Muhammad Hedayat Ali, Deputy Magistrate and Deputy Collector, Bogra, is transferred to the headquarters station of the Midnapore district.

Mymensingh-24-Parganas.—No. 5539A.—4th July 1936.—The orders of the 18th June 1936, transferring Babu Promode Kumar Bhattacharji, Deputy Magistrate and Deputy Collector, Kishoreganj, Mymensingh, to the headquarters station of the 24-Parganas district, are cancelled.

POLICE.

Midnapore-Howrah.—No. 5304A.—29th June 1936.—Mr. T. G. H. Holman, I.P., officiating Additional Superintendent of Police, Midnapore, is appointed temporarily to act as Superintendent of Police, Howrah.

Midnapore. No. 5307A.—29th June 1936.—Babu Bankim Chandra Das Gupta, Deputy Superintendent of Police, on leave, is appointed to act, until further orders, as Additional Superintendent of Police, Midnapore, and, under the provisions of section I of Act V of 1861, to perform the duties of a Superintendent of Police in that district.

No. 5380A.—30th June 1936.—Mr. Raghabendra Nath Banarji of the Bengal Police Service has been appointed by the Secretary of State in Council to the Indian Police in the rank of Superintendent of Police, with effect from the 21st October 1935.

No. 5383A.—30th June 1936.—Mr. Karunamay Ray of the Bengal Police Service has been appointed by the Secretary of State in Council to the Indian Police in the rank of Superintendent of Police, with effect from the 14th December 1935.

Faridpur.—No. 5460A.—2nd July 1936.—Khan Bahadur Ruknuddin Ahmad, Deputy Superintendent of Police, is appointed temporarily to act as Additional Superintendent of Police, Faridpur, and under the provisions of section 1 of Act V of 1861 to perform the duties of a Superintendent of Police in that district.

ECCLESIASTICAL.

Calcutta-Darjeeling. No. 5440A.—2nd July 1936.—The Reverend Canon C. G. Pearson, Senior Chaplain of St. Paul's Cathedral, Calcutta, is appointed to be Chaplain of Darjeeling, with effect from the 1st July 1936, or any subsequent date on which he may take over charge of his duties.

Darjeeling-Calcutta.—No. 5446A.—2nd July 1936.—The Reverend T. B. Randolph, Chaplain of Darjeeling, is appointed to be Senior Chaplain, St. Paul's Cathedral, Calcutta, with effect from the 1st July 1936, or any subsequent date on which he may take over charge of his duties.

Leave.

GENERAL.

No. 1299A.D.—25th June 1936.—Maulvi Abu Hamid Nurul Huda, Sub-Deputy Collector, is allowed leave on average pay up to the 1st July 1936, under rule 81 (*b*) (*ii*) of the Fundamental Rules, in extension of the leave granted to him under the orders of the 6th April 1936

Rajshahi.—No. 1304A.D.—25th June 1936.—Babu Bimala Kanta Sarkar, Sub-Deputy Collector, Rajshahi, is allowed leave for four months, with effect from the 27th May 1936, viz., leave on average pay for two months and twenty days, under rule 81 (*b*) (*ii*) of the Fundamental Rules, and leave on half average pay for the remaining period, under rule 81 (*d*) of those Rules.

Noakhali.—No. 5288A.—27th June 1936.—Rai Jiban Chandra Chatarji Bahadur, Deputy Magistrate and Deputy Collector, Noakhali, is allowed leave on average pay for twelve days, under rule 81 (*b*) (*ii*) of the Fundamental Rules, with effect from the 20th July 1936.

Chittagong. No. 5296A.—29th June 1936.—Major G. L. Hyde, Additional District Magistrate, Chittagong, is allowed leave from the 15th July 1936 or any subsequent date on which he may be relieved up to the 17th October 1936, viz., leave on average pay for two months and seventeen days, under rule 100 (*a*) (*i*) of the Fundamental Rules, and furlough under the Military Rules for the remaining period.

Tippera.—No. 5310A.—29th June 1936.—In modification of the orders of the 29th May 1936, Mr. M. A. T Iyengar, I.C.S., Joint Magistrate and Deputy Collector, Chandpur, Tippera, is allowed leave on half average pay for fourteen days, under rule 81 (*d*) of the Fundamental Rules, with effect from the 17th June 1936.

Jalpaiguri.—No. 5319A.—30th June 1936.—Mr. E. A. Rampezotti, Deputy Magistrate and Deputy Collector, Jalpaiguri, is allowed leave on average pay for eight months, under the proviso to rule 81 (*b*) (*ii*) of the Fundamental Rules, with effect from the 5th July 1936, or any subsequent date on which he may avail himself of it.

No. 5354A.—30th June 1936.—Babu Mahendra Nath Chaudhuri, Sub-Deputy Collector, is allowed leave on average pay for six weeks, under rule 81 (*b*) (*ii*) of the Fundamental Rules, with effect from the 1st July 1936, or any subsequent date on which he may be relieved of his settlement duty.

Rajshahi Divn.—No. 5399A.—30th June 1936.—Mr. F. W. Robertson, C.I.E., I.C.S., Commissioner of the Rajshahi Division, is allowed leave for two years and four months, viz., leave on average pay for six months and twenty-eight days, under rule 81 (*b*) (*i*) of the Fundamental Rules, with effect from the 16th July 1936, or any subsequent date on which he may be relieved, and leave on half average pay for the remaining period, under rule 81 (*d*) of those Rules.

Mymensingh.—No. 5403A.—30th June 1936.—Maulvi Habibur Rahman, Sub-Deputy Collector, Jamalpur, Mymensingh, is allowed leave on average pay, under rule 81 (*b*) (*ii*) of the Fundamental Rules, with effect from the 1st July 1936, or any subsequent date on which he may be relieved, to the 17th October 1936, inclusive.

Tippera.—No. 5415A.—1st July 1936.—Maulvi Hafizul Haq, Sub-Deputy Collector, on probation, Tippera, is allowed leave on average pay for two months, under rule 81 (*b*) (*ii*) of the Fundamental Rules, with effect from the date on which he may be relieved.

Bankura.—No. 5428A.—1st July 1936.—Maulvi Abul Khair Ahmad Khan, Sub-Deputy Collector, Bankura, is allowed leave on average pay for two months, under rule 81(*b*)(*ii*) of the Fundamental Rules, with effect from the date on which he may be relieved.

Howrah.—No. 5443A.—2nd July 1936.—Babu Atul Kumar Ghosh, Sub-Deputy Collector, Howrah, is allowed privilege leave, under article 260 of the Civil Service Regulations, from the 14th July 1936 to the 15th October 1936, inclusive.

Mymensingh.—No. 5466A. — 2nd July 1936.—Babu Upendra Chandra Dutta, Deputy Magistrate and Deputy Collector, Jamalpur, Mymensingh, was granted leave on average pay for four days, under rule 81 (*b*) (*ii*) of the Fundamental Rules, with effect from the 2nd June 1936.

Pabna.—No. 5470A.—3rd July 1936. — Maulvi Tauhiduddin Ahmad, Deputy Magistrate and Deputy Collector, Pabna, was allowed leave on average pay for four days, under rule 81 (*b*) (*ii*) of the Fundamental Rules, with effect from the 24th June 1936.

No. 5494A.—3rd July 1936.—Babu Sudhanshu Kumar Banarji, Deputy Magistrate and Deputy Collector, is allowed earned leave for one month, under rule 10 of the Bengal Services (Revision of Leave) Rules, 1934, with effect from the 16th July 1936, or any subsequent date on which he may relinquish charge of his settlement duties.

POLICE.

No. 5293A - 29th June 1936.—Mr. A. H. M. Shamsoddoha, I.P., is allowed leave on average pay for thirteen days, under rule 81 (*b*) (*ii*) of the Fundamental Rules, in extension of the leave granted to him under the orders of the 13th May 1936

Howrah.—No. 5313A.—29th June 1936.—Rai Sahib Pramod Nath Mukharji, Deputy Superintendent of Police, now employed as officiating Superintendent of Police, Howrah, is allowed leave on average pay for fifteen days, under rules 81 (*b*) (*ii*) and 86 (*a*) of the Fundamental Rules, with effect from the 1st July 1936.

No. 5436A.—1st July 1936.—Mr. P. E. S. Finney, I.P., Assistant Superintendent of Police, was allowed leave on average pay up to the 10th June 1936, under rule 81 (*b*) (*i*) of the Fundamental Rules, in extension of the leave granted to him under the orders of the 29th May 1936.

H. J. TWYNAM,

Chief Secy. to the Govt. of Bengal (offg.).

NOTIFICATIONS.

Noakhali - Hooghly - Jalpaiguri - Bankura.—No. 5424A. — 1st July 1936. — The Assistant Magistrates named below are vested with the powers of a Deputy Collector :—

Mr. S. Drucquer, I.C.S., Noakhali.
Mr. M. M. Basu, I.C.S., Hooghly.
Mr. A. Wooller, I.C.S., Jalpaiguri.
Mr. H. C. Gupta, I.C.S., Bankura.

No. 5475A.—3rd July 1936.—Whereas by notification No. 5473A., dated the 3rd July 1936, His Excellency the Governor has been pleased to call upon the Bengal National Chamber of Commerce constituency of the Bengal Legislative Council to elect a member to the said Council in place of Mr. Surendra Nath Law, deceased :

Now, therefore, the Governor in Council is pleased, in exercise of the powers conferred by clauses (*a*) and (*b*) of sub-rule (*2*) of rule 11 of the Bengal Electoral Rules, and in pursuance of sub-rule (*3*) of that rule, to prescribe the 15th July 1936 as the date for the nomination of candidates and for the delivery of nomination papers to the Returning Officer and the 16th July 1936 as the date on which the scrutiny of nominations shall be held.

No. 5550A.—4th July 1936.—Whereas by notification No. 5548A., dated the 4th July 1936, His Excellency the Governor has been pleased to call upon the Presidency and Burdwan (European) constituency of the Bengal Legislative Council to elect a member to the said Council in place of Mr. F. C. Guthrie, resigned :

Now, therefore, the Governor in Council is pleased, in exercise of the powers conferred by clauses (*a*) and (*b*) of sub-rule (*2*) of rule 11 of the Bengal Electoral Rules, and in pursuance of sub-rule (*3*) of that rule, to prescribe the 17th July 1936 as the date for the nomination of candidates and for the delivery of nomination papers to the Returning Officer and the 18th July 1936 as the date on which the scrutiny of nominations shall be held.

No. 5499A.—3rd July 1936.—In exercise of the power conferred by rule 39, read with rule 7 of the Civil Services (Classification, Control and Appeal) Rules, made by the Secretary of State for India in Council under section 96B (2) of the Government of India Act, 1919, the Government of Bengal hereby make the following amendment to the Bengal Provincial Services Recruitment Rules published with Appointment Department notification No. 7183A., dated the 22nd May 1930 :—

Add the following to the list of exceptions noted under rule V(2) (*b*):—

Bengal Higher Agricultural Service—No limit.
Bengal Higher Veterinary Service—No limit.
Bengal Lower Agricultural Service—No limit.
Bengal Lower Veterinary Service—No limit.
Bengal Gardeners' Service—No limit.

H. J. TWYNAM,
Chief Secy. to the Govt. of Bengal (offg.).

Reforms.

NOTIFICATIONS.

No. 3246A.R.—6th July 1936. In exercise of the power conferred by rule 47 of the Bengal Legislative Assembly Electoral (Preparation, Revision and Publication of the Electoral Rolls) Rules, 1936, read with paragraph 26 of Part I of the Government of India (Provincial Legislative Assemblies) Order, 1936, and of all other powers enabling him in that behalf, the Governor of Bengal in Council is pleased to fix the 1st of August 1936, as the date within which the Trade Union Constituencies Tribunal shall issue certificates to such registered Trade Unions as satisfy the conditions referred to in clauses (*a*) to (*d*) of sub-paragraph (2) of paragraph 18 of Part IV of the said Order and to such recognised Trade Unions as satisfy the conditions referred to in sub-paragraph (*f*) of that paragraph and prepare the lists of registered Trade Unions and recognised Trade Unions referred to in the said rule.

No. 3422A.R.—7th July 1936. In exercise of the power conferred by the proviso to sub-rule (*f*) of rule 25 of the Bengal Legislative Assembly Electoral (Preparation, Revision and Publication of Electoral Rolls) Rules, 1936, read with paragraph 26 of Part I of the Government of India (Provincial Legislative Assemblies) Order, 1936, and of all other powers enabling him in that behalf, the Governor of Bengal in Council is pleased to specify a period of sixteen days from the date of the publication of the electoral roll of each of the territorial, Landholders, Commerce and Industry, Factory Labour, Colliery Labour and Tea Garden Labour constituencies under rule 23 of the said rules as the period within which claims and objections in respect of the electoral roll of each such constituency respectively shall be preferred.

No. 3571A.R.—7th July 1936.—In exercise of the power conferred by the proviso to sub-rule (*f*) of rule 16 of the Bengal Legislative Council Electoral (Preparation, Revision and Publication of Electoral Rolls) Rules, 1936, read with paragraph 23 of Part I of the Government of India (Provincial Legislative Councils) Order, 1936, and of all other powers enabling him in that behalf, the Governor of Bengal in Council is pleased to specify a period of sixteen days from the date of the publication of the electoral roll of every territorial constituency under rule 14 of the said rules as the period within which claims and objections in respect of each such electoral roll respectively shall be preferred.

R. N. GILCHRIST,
Reforms Commr. and Joint Secy. (Ex-officio) to the Govt. of Bengal.

POLITICAL DEPARTMENT.

Political.

NOTIFICATION.

No. 10763P.—30th June 1936.—It is hereby notified that, under the provisions of section 133 of the Code of Civil Procedure, 1908 (Act V of 1908), the Governor in Council has been pleased to exempt from personal attendance in the Civil Courts in Bengal the Hon'ble Maharaja Sir Manmatha Nath Ray Chaudhuri, Kt., M.L.C., of Santosh, in the district of Mymensingh.

H. J. TWYNAM,
Chief Secy. to the Govt. of Bengal (offg.).

Jails.

Orders by the Inspector-General of Prisons, Bengal.

No. 16011. 27th June 1936.—Jailor Babu Digendra Bhusan Ghose made over executive charge of the Howrah Jail to Jailor Babu Jyotish Chandra Banerjee on the afternoon of the 9th June 1936.

No. 16186. 30th June 1936.—Dr. H. C. Sen made over charge of the Burdwan Jail to Captain E. H. Lossing, I.M.S., on the forenoon of the 19th June 1936.

R. E. FLOWERDEW, LT.-COL., I.M.S.,
Inspector-General of Prisons, Bengal.

POLICE DEPARTMENT.

NOTIFICATIONS.

No. 2794Pl.—3rd July 1936.—In exercise of the powers conferred by section 11 of the Indian Motor Vehicles Act, 1914 (VIII of 1914), the Governor in Council is pleased to make the following amendment in the Bengal Motor Vehicles Rules, 1935, published under notification No. 436Pl., dated the 31st January 1935, at pages 167-263, Part I of the *Calcutta Gazette* of the same date :—

Amendment.

After rule 75 of the said rules, *insert* the following as a new rule 75A, namely :—

"75A. On all routes where an omnibus or omnibuses ply for hire in competition with railways, tickets shall be issued to every passenger by the conductor or driver. On all other routes, tickets shall similarly be issued unless exemption is granted by the District Magistrate. Such tickets shall be numbered consecutively and shall show the stages of the journey and fares therefor and shall be punched in the presence of the passenger."

Howrah.—No. 2845Pl.—3rd July 1936.—In exercise of the power conferred by sub-section (*3*) of section 1 of the Bengal Cruelty to Animals Act, 1920 (Bengal Act I of 1920), the Governor in Council is pleased to extend the said Act with effect from the 1st August 1936 to the Municipality of Howrah.

Howrah.—No. 2846Pl. — 3rd July 1936. — In exercise of the powers conferred by sub-section (*1*) of section 13 of the Bengal Cruelty to Animals Act, 1920 (Bengal Act I of 1920), the Governor in Council is pleased to appoint the following places at which weigh-bridges shall be established for the detection of cases of overloading of animals, and is also pleased to declare that the limits of the areas for which such weigh-bridges are established shall be as noted against each, namely :—

	Name of place.	Limits of areas comprising the local limits of—
1.	Fanshitolla at the junction of Church Road, Belilious Road and Grand Trunk Road, Howrah.	The municipal area of Howrah, south of the East Indian Railway line.
2.	In front of the premises known as Chamaria Buildings on Grierson Road, Howrah.	The municipal area of Howrah, north of the East Indian Railway line.

Howrah.—No. 2847Pl. — 3rd July 1936. — In exercise of the power conferred by section 14 of the Bengal Cruelty to Animals Act, 1920 (Bengal Act I of 1920), the Governor in Council is pleased to appoint the Rameswar Maliah Veterinary Charitable Dispensary on the Grand Trunk Road, Howrah, to be an infirmary for the treatment and care of animals in respect of which offences against the said Act are believed to have been committed within the limits of the Municipality of Howrah.

Howrah.—No. 2848Pl.—3rd July 1936.—In exercise of the powers conferred by sub-sections (*1*) and (*2*) of section 19 of the Bengal Cruelty to Animals Act, 1920 (Bengal Act I of 1920), the Governor in Council is pleased to appoint the following place at which any excess load, removed from an animal under sub-section (*2*) of section 17, and any load carried by an animal seized under section 18 of the said Act within the limits of the Municipality of Howrah, may be kept by the weigh-bridge officer, if not kept at a weigh-bridge, namely :—

The Central Store-house in the Municipal Market on the Grand Trunk Road, Howrah.

Howrah. -No. 2849Pl.—3rd July 1936.—In exercise of the power conferred by section 36 of the Bengal Cruelty to Animals Act, 1920 (Bengal Act I of 1920), the Governor in Council is pleased to appoint the Chairman and the Vice-Chairman of the Municipal Committee for the Prevention of Cruelty to Animals, Howrah, to exercise and perform within the limits of the Municipality of Howrah such powers and duties as are conferred or imposed on the Commissioner of Police, Calcutta, by sections 19 and 20 of the said Act.

Howrah.—No. 2850Pl.—3rd July 1936.—In exercise of the power conferred by section 30 of the Bengal Cruelty to Animals Act, 1920 (Bengal Act I of 1920), the Governor in Council is pleased to delegate to the Chairman of the Municipal Committee for the Prevention of Cruelty to Animals, Howrah, the powers under sections 13 and 15 of the said Act, namely :—

(*i*) to erect weigh-bridges subject to approval of Government and inspection by them,

(*ii*) to appoint Veterinary Inspectors and to declare the areas in the Municipality of Howrah within which such officers shall exercise their powers under the Act, and

(*iii*) to appoint weigh-bridge officers to have charge of any weigh-bridge or weigh-bridges established under section 13 of the said Act within the Municipality of Howrah.

Howrah.—No. 2851Pl.—3rd July 1936.—In exercise of the power conferred by sub-section (*1c*) of section 19 of the Bengal Cruelty to Animals Act, 1920 (Bengal Act I of 1920), the Governor in Council is pleased to authorise the officer-in-charge of the Central Store-house in the Municipal Market on the Grand Trunk Road, Howrah, to take charge of the load made over to him by the weigh-bridge officer under the said sub-section.

Howrah.—No. 2852Pl.—3rd July 1936.—In exercise of the powers conferred by sub-section (*1*) and clauses (*a*), (*b*) and (*d*) of sub-section (*2*) of section 29 of the Bengal Cruelty to Animals Act, 1920 (Bengal Act I of 1920), the Governor in Council is pleased to make the following rules for application to areas within the Municipality of Howrah to which the said Act has been extended by notification No. 2845Pl., dated the 3rd July 1936 :—

Rules.

1. (*1*) *Maximum weight of the loads drawn by animals.*—The maximum weight (including the weight of the cart) of the loads carried in carts drawn by animals shall be as follows :—

	Maunds.
For each lorry or four-wheeled wagon drawn by 2 buffaloes or 2 horses	70
For each two-wheeled cart drawn by—	
2 buffaloes	60
1 buffalo	25
2 Punjab, Bombay or Madras bullocks, each measuring 52 to 60 inches in height	45
2 Bihar or United Provinces bullocks, each measuring 46 to 52 inches in height	30
2 local bulls or bullocks, each measuring 40 to 46 inches in height	25
1 horse	20
1 pony	15
1 bull or bullock	15

(2) The maximum weight of a pack or bundle when carried on a full grown donkey shall be 1½ maunds.

(3) The height of a bullock is to be measured by means of a stick placed, with one end on the ground, immediately behind the elbow of the foreleg when the animal is standing straight, so that the other end will reach a point at the base of the hump.

2. *Prevention of overcrowding.*—When animals are carried in baskets, the measurement of the basket and number of animals to be carried in each basket shall be as follows :—

Fowls—

Size of basket—diameter 3 feet ; height 10 inches to 12 inches.

Fowls per basket—

Large	30
Medium	40
Small	60
Chickens	80
Ducks	23
Small ducks	33

Monkeys—

Size of basket—5 feet × 2½ feet ; height 2 feet.

Monkeys per basket—

25 small monkeys.

20 medium monkeys.

8 large monkeys.

Squirrels—

Size of basket—2 feet × 1½ feet ; height 12 inches.

Squirrels per basket—20.

Note.—All baskets shall be constructed with a firm base.

Animals (when carried in railway wagons)—

The maximum number of animals which may be carried in a railway wagon shall not exceed the number, if any, imposed by a railway administration as a condition under sub-section (*1*) of section 54 of the Indian Railways Act, 1890 (IX of 1890).

3. *Qualifications of Veterinary Inspector and weigh-bridge officer.*—Every Veterinary Inspector of the Municipal Committee for the Prevention of Cruelty to Animals, Howrah, shall hold a diploma of a recognised veterinary college. Every Agent of the said Committee who will also act as weigh-bridge officer shall be a graduate of the Bengal Veterinary College, provided that this rule shall not apply to Agents who are already in service at the time it comes into force.

Howrah. No. 2853Pl. 3rd July 1936. In exercise of the powers conferred by sub-section (*1*) and clause (*h*) of sub-section (*2*) of section 29 of the Bengal Cruelty to Animals Act, 1920 (Bengal Act I of 1920), the Governor in Council is pleased to make the following rules for carrying out, within the limits of the Municipality of Howrah to which the said Act has been extended by notification No. 2845Pl., dated the 3rd July 1936, the provisions of the proviso to sub-section (*3*) of section 19 and of section 20 of the said Act in regard to the disposal of loads referred to therein :—

Rules.

1. Goods consisting of vegetables, fruit, fish, milk, meat or flesh, and similar articles subject to speedy and natural decay shall, if not claimed by the owner at the time of detention, be at once conveyed to the Central Store-house in the Municipal Market on the Grand Trunk Road, Howrah, hereinafter referred to as "the Central Store-house" and there sold, without notice, to the highest bidder under the orders of the Chairman or the Vice-Chairman of the Municipal Committee for the Prevention of Cruelty to Animals, Howrah.

2. Eggs, potatoes, grain and flour shall, if not at once claimed and removed by the owner, be at once conveyed to the Central Store-house and there be kept or stored for a period of forty-eight hours and notice sent forthwith to the owner, if he is known. If within this period no one satisfies the officer-in-charge of the Store-house that he is the owner of the load or of the articles, they shall be sold by auction at the Central Store-house, without further notice, to the highest bidder under the orders of the Chairman or the Vice-Chairman of the Municipal Committee for the Prevention of Cruelty to Animals, Howrah.

3. If the load consists of live stock, the animals, if not claimed and removed by the owner at the time of detention, shall be removed to the Central Store-house and kept there for a period of forty-eight hours, notice being despatched forthwith to the owner, if known. If the animals are not claimed and removed within forty-eight hours from the time of arrival at the Store-house, they may be sold under the orders of the Chairman or the Vice-Chairman of the Municipal Committee for the Prevention of Cruelty to Animals, Howrah.

4. Article offered for sale under rules 1, 2 and 3, but not sold, shall be disposed of in the manner ordered by the Chairman or the Vice-Chairman of the Municipal Committee for the Prevention of Cruelty to Animals, Howrah.

5. Under the orders of the Chairman or the Vice-Chairman of the Municipal Committee for the Prevention of Cruelty to Animals, Howrah, a Veterinary Inspector may at any time authorise the destruction of any animal forming part of any excess load removed under sub-section (*2*) of section 17 or of any load seized under section 18 of the Act and received at the Central Store-house, if he is of opinion, which should be recorded in writing, that the physical condition of the animal is such that it would be cruel to keep it alive.

6. Goods (other than those specified in rules 1, 2 and 3) shall be detained and kept for a period of six months from the date of entry in the register referred to in sub-section (*3*) of section 19 of the Act with a view to determine the true owner and if during that period no one satisfies the Chairman or the Vice-Chairman of the Municipal Committee for the Prevention of Cruelty to Animals, Howrah, that he is the true owner, the goods shall, after the expiration of that period, be conveyed to the Central Store-house if not already kept or stored there and sold by auction at the said Store-house to the highest bidder. Such sales shall be held without notice on the second Monday of the month following that in which the period of detention expires.

Howrah.—No. 2854Pl.—3rd July 1936.—In exercise of the power conferred by sub-section (*2*) of section 24 of the Bengal Cruelty to Animals Act, 1920 (Bengal Act I of 1920), the Governor in Council is pleased to prescribe the following scale of rates payable by the owners for the cost of treatment, feeding and watering of their animals when detained under sub-section (*1*) of the said section at the Rameswar Maliah Charitable Veterinary Dispensary at 429, Grand Trunk Road, Howrah, which has been appointed to be an infirmary under the said Act.

Animals detained in the above infirmary at 429, Grand Trunk Road, Howrah, will be treated, fed and watered at twelve annas a day for horses and buffaloes and eight annas a day for bullocks and cows.

Howrah.—No. 2855Pl.—3rd July 1936.—In exercise of the powers conferred by sub-section (*1*) and clauses (*f*) and (*g*) of sub-section (*2*) of section 29 of the Bengal Cruelty to Animals Act, 1920 (Bengal Act I of 1920), the Governor in Council is pleased to prescribe for the areas within the Municipality of Howrah to which the said Act has been extended by notification No. 2845Pl., dated the 3rd July 1936, the following forms and registers for carrying out the purposes of the said Act, and the particulars to be entered in the register of excess loads to be maintained under sub-section (*3*) of section 19 of the Act, as indicated in the heading of the several columns thereof :—

Form of Veterinary Inspector's Report.

No.

This is to certify that I have examined.....
brought by Agent.....particulars of which are noted below. The animal is unfit for work at present being.....
....., and I recommend its detention and treatment in the infirmary for.....days and the prosecution of the persons concerned.

Accused's name.....

Owner's name .....

Address .....

Carriage or cart No. .....

Description of animal .....

Time .....

Date .....

Veterinary Inspector.

Area .....

Note.—The form is to be printed in duplicate. One copy is to be kept in the office of the Municipal Committee for the Prevention of Cruelty to Animals, Howrah, and the other attached to police challan sent up with case.

Form of notice to owner of goods (after goods have been sent to the Store-house).

Owner's name .....

Address .....

.....

Please note that a/an excess load of..... has been removed from a cart (drawn by an unfit animal) as per challan No....., dated....., supplied to your carter and kept in the Store-house at..... ..at your risk Goods will be handed to any person authorised by you on payment of all charges for removal and detention. No charge for detention will be made for forty-eight hours.*

*(Unless claimed within this period, the goods will be sold by auction.)

Howrah, the.....19 .

Officer in-charge of Store-house.

Note This form will be printed in duplicate. One copy is to be retained in the Store-house and the other sent to the owner on which shall be printed the direction that "This notice is to be produced when goods are claimed."

Note. To be included when the goods are covered by rules 2 and 3 published under notification No.....dated.....or deleted in other cases.

Form of weigh-bridge challan.

.....Weigh-bridge. Challan No. .....

Name of accused .....

Address of accused .....

Father's name .....

Owner's name .....

Owner's address .....

Description of cart .....

Description of load .....

Description of animal .....

Measurements of bullocks .....

Measurements of horn-space .....

Total weight .....

Excess weight .....

Agent No. .....

Weigh-bridge Officer, and/or Agent,

Municipal Committee for the Prevention of Cruelty to Animals, Howrah.

Date .....

Note.—The form is to be made out in triplicate. One copy should be kept at weigh-bridge, one copy should be sent with the goods to officer-in-charge, Store-house, and one copy attached to the police challan sent up with case.

Register of Cases treated in.....infirmary.

Serial No.	Name of complainant.	Name of owner.	Residence.	Date of admission to hospital.	Date of production in court.	Description of animal.	Veterinary Inspector's report.	Court order.	Period of detention.	Date of discharge.	Rate and hospital cost.	Amount received through Court.	Amount paid by owner.	Remarks.
1	2	3	4	5	6	7	8	9	10	11	12	13	14	15

Note.—Columns 2, 6, 9, 10 and 13 to be filled up in Court cases.
Columns 8, 12 and 14 to be filled up in cases under section 22 in which there is no prosecution.
Columns 1, 3, 4, 5, 7 and 11 to be filled up in all cases.

Register of Excess Loads detained (under section 19 of Act I of 1920) in .....Store-house.

Serial No.	Date of arrest.	Agent's name.	Weigh-bridge officer's chalan No.	Name and address of owner of goods.	Description of goods.	Gross weight.	Excess weight.	Number and date of notice to owner of goods.	Date of removal of goods by the owner.	Amount of charges due.	Amount of charges paid and receipt number.	Date of sale of goods, if not removed by owner.	Sale proceeds of goods disposed of under sections 19(3) and 20.	Amount of surplus, if any, paid to the owner and date of payment.	Remarks.
1	2	3	4	5	6	7	8	9	10	11	12	13	14	15	16

Daily Register of Cases at ..... weigh-bridge.

Serial No.	Date.	Slip No.	Agent's No.	Cart No.	Bullock.	Buffalo.	Gross weight.	Excess load.	Signature.	Remarks.
1	2	3	4	5	6	7	8	9	10	11

Register of Cases produced in Court.

Serial No.	Date and chalan No.	Date of production of animal in court.	Names of complainant and accused.	Description of animals and charge.	Opinion of court Veterinary Surgeon, if any.	Opinion of the Veterinary Inspector of the Municipal Committee for the Prevention of Cruelty to Animals, Howrah.	Magistrate's order.	Remarks.
1	2	3	4	5	6	7	8	9

Howrah.—No. 2856 Pl.– 3rd July 1936.—In exercise of the powers conferred by sub-section (*i*) and clause (*hh*) of sub-section (*2*) of section 29 of the Bengal Cruelty to Animals Act, 1920 (Bengal Act I of 1920), the Governor in Council is pleased to make the following rule for application to areas within the Municipality of Howrah to which the said Act has been extended by notification No. 2845Pl., dated the 3rd July 1936, prescribing the scales of rates of costs and charges payable under section 19 of the said Act, namely:—

Rule.

All costs and charges payable under section 19 of the Act shall be at the following rates :—

Coolie hire for removal of loads from vehicle at one anna per maund.

Bullock-cart hire per load of 15 maunds at Rs. 1-4 for first mile and 8 annas for every additional mile or part of a mile. Minimum charge Re. 1-4.

Machinery and similar heavy loads will be removed by motor traction at current local rates.

For goods detained in the Central Store-house in the Municipal Market on the Grand Trunk Road, Howrah, when they are not claimed by owners within forty-eight hours the charge will be at Re. 1 *per diem* for each 10 maunds or less.

Howrah.—No. 2857Pl.—3rd July 1936. — In exercise of the power conferred by clause (*i*) of sub-section (*2*) of section 29 of the Bengal Cruelty to Animals Act, 1920 (Bengal Act I of 1920), the Governor in Council is pleased to direct that (*1*) the fines realised under the Act and (*2*) the surplus sale-proceeds, realised under section 20 and sub-section (*5*) of section 24 of the Act, within the Municipality of Howrah, shall be credited to the funds of the Municipal Committee for the Prevention of Cruelty to Animals, Howrah.

Howrah.—No. 2858Pl.– 3rd July 1936. — In exercise of the powers conferred by clause (*bb*) of sub-section (*2*) of section 29 of the Bengal Cruelty to Animals Act, 1920 (Bengal Act I of 1920), the Governor in Council is pleased to make the following rule regarding the use of buffaloes for draught purposes within the limits of the Municipality of Howrah :—

Rule.

Prohibited period for the use of buffaloes for draught purposes.

Buffaloes shall not be used for draught purposes within the limits of the Municipality of Howrah between the hours of 12 noon and 3 p.m. from the first day of April until such date in June, after the breaking of the rains, as the Local Government may notify annually in this behalf as the date of the cessation of this prohibition.

H. J. TWYNAM,

Chief Secy. to the Govt. of Bengal (offg.).

Orders by the Inspector-General of Police, Bengal.

Calcutta.—No. 7115A.—27th June 1936.—The following postings and promotions are ordered with effect from 20th June 1936 :—

Rangpur.—Maulvi Fazlul Karim, officiating Inspector, E. B. and A. B. Railway Police, Saidpur, is absorbed in the permanent vacancy caused by the retirement of Babu Mati Lal Sen, Inspector, and is confirmed in the rank of Inspector as he had officiating service for 2 years counting towards the period of probation.

Howrah.—Babu Dol Gobinda Mukharji, officiating Inspector, Howrah, is absorbed in the permanent vacancy caused by the retirement of Babu Satish Narayan Biswas, Inspector, and is confirmed in the rank of Inspector as he had officiating service for 2 years counting towards the period of probation. He will remain in Howrah.

Jalpaiguri.—Babu Hem Baran Das Bakshi, officiating Inspector, Jalpaiguri, is absorbed in the permanent vacancy caused by the death of Maulvi Arfan Ali, Inspector, and is confirmed in the rank of Inspector as he had officiating service for 2 years counting towards the period of probation. He will remain in Jalpaiguri.

J. C. FARMER,

Inspector-General of Police (offg.).

JUDICIAL DEPARTMENT.

No. 5607A.

Powers.

Burdwan.—No. 1302A.D.—25th June 1936.—In exercise of the powers conferred by sub-section (*1*) of section 164 of the Code of Criminal Procedure, 1898 (Act V of 1898), the Governor in Council is pleased to empower Babu Nirmal Kumar Sen, a Sub-Deputy Magistrate, also a Magistrate of the second class at Kalna, in the district of Burdwan, to record any statement or confession made to him in the course of an investigation under Chapter XIV of the said Code or at any time afterwards before the commencement of enquiry or trial.

Nadia.—No. 5406A.—30th June 1936.—In exercise of the powers conferred by sub-section (*1*) of section 164 of the Code of Criminal Procedure, 1898 (Act V of 1898), the Governor in Council is pleased to empower Babu Keshab Chandra Sen, Sub-Deputy Magistrate, also a Magistrate of the second class at Chuadanga, in the district of Nadia, to record any statement or confession made to him in the course of an investigation under Chapter XIV of the said Code or at any time afterwards before the commencement of enquiry or trial.

Rajshahi.—No. 5418A. — 1st July 1936. — Mr. M. Ahmad, I.C.S., Joint Magistrate, Rajshahi, is vested with the powers of a Magistrate of the first class.

Noakhali - Hooghly - Jalpaiguri - Bankura. — No. 5420A. — 1st July 1936. — The Assistant Magistrates named below are vested with the powers of a Magistrate of the second class :—

Mr. S. Drucqu r, I.C.S., Noakhali.

Mr. M M. Basu, I C.S., Hooghly.

Mr. A. Wooller, I.C.S., Jalpaiguri.

Mr. H. C. Gupta, I.C.S., Bankura.

H. J. TWYNAM,

Chief Secy. to the Govt. of Bengal (offg.).

Appointments and Transfers.

Bankura.—No. 4985J.—27th June 1936.—In exercise of the powers conferred by sections 14 and 15 and the proviso to section 357 of the Code of Criminal Procedure, 1898 (Act V of 1898), the Governor in Council is pleased—

(*a*) to confer upon Babu Haridas Bhattacharji the powers of a Magistrate of the third class, in the district of Bankura, for a period of three years from the date of this notification,

(*b*) to direct him to sit as a member of the Bishnupur bench in the said district, and

(*c*) to direct him to take down evidence in the English language.

Bankura.—No. 4990J.—27th June 1936.—In exercise of the powers conferred by section 14 and the proviso to section 357 of the Code of Criminal Procedure, 1898 (Act V of 1898), the Governor in Council is pleased :

(*a*) to confer upon Babu Bijoy Kumar Neogi the powers of a Magistrate of the third class, in the district of Bankura, for a period of three years from the date of this notification, in respect to such cases as may be made over to him within the limits of the Sonamukhi Municipality, and

(*b*) to direct him to take down evidence in the English language.

Rangpur-Dinajpur.—No. 5000J.—29th June 1936.—Maulvi Muhammad Hossain Ali, probationary munsif, now employed as additional munsif (on training) at Rangpur (Sadar), is appointed to be a munsif in the district of Dinajpur, to be ordinarily stationed at the Sadar station, during the absence, on leave, of Babu Basanta Bihari Mukharji, or until further orders.

Nadia-Hooghly.— No. 5030J.—29th June 1936. —Babu Jyoti Prosad Banarji, munsif of Kushtia, in the district of Nadia, is appointed temporarily to act as Additional Subordinate Judge of Howrah, in the district of Hooghly.

Bakarganj-Nadia.—No. 5033J.—29th June 1936.—Babu Sailendra Nath Mitra, munsif of Barisal, in the district of Bakarganj, is appointed to be a munsif in the district of Nadia, to be ordinarily stationed at Kushtia.

Bakarganj.—No. 5036J.—29th June 1936.—Maulvi Mahammad Idris, probationary munsif, now employed as additional munsif (on training) at Patuakhali, in the district of Bakarganj, is appointed to be a munsif in the said district, to be ordinarily stationed at Barisal.

Calcutta.— No. 5040J.—30th June 1936.—In exercise of the power conferred by section 492(*J*) of the Code of Criminal Procedure, 1898 (Act V of 1898), the Governor in Council is pleased to appoint Mr A. K. Basu, Government Counsel, High Court, Calcutta, a Public Prosecutor, for the purpose of conducting the case Emperor *versus* C. N. Naidu and others (now being tried at Alipore by Babu S. C. Mazumdar, Magistrate, First Class).

Calcutta.—No. 5074J.—30th June 1936.—In exercise of the power conferred by section 18 of the Code of Criminal Procedure, 1898 (Act V of 1898), the Governor in Council is pleased to appoint the gentlemen named below to be Presidency Magistrates in Calcutta, with effect from the 13th May 1936, for a period of three years and to empower each of them to sit singly as a Presidency Magistrate :—

Babu Suresh Chandra Nandi.

Babu Arabinda Lahiri.

Bakarganj.—No. 5080J.—30th June 1936.—In exercise of the powers conferred by sections 14 and 15 and the proviso to section 357 of the Code of Criminal Procedure, 1898 (Act V of 1898), the Governor in Council is pleased—

(*a*) to confer upon Maulvi Mul ammad Ismail the powers of a Magistrate of the first class, in the district of Bakarganj, for a period of three years from the date of this notification, in respect of such cases as may be made over to him within the limits of the Pirojpur subdivision of the said district,

(*b*) to direct that he shall, in addition to sitting singly, sit as a member of the Pirojpur bench in the said district, and

(*c*) to direct him to take down evidence in the English language.

Nadia.— No. 5119J. 30th June 1936.—Babu Anukul Chandra Lahiri, munsif, on leave, is appointed to be a munsif in the district of Nadia, to be ordinarily stationed at Kushtia, *vice* Babu Mati Lal Das, granted leave.

Calcutta.—No 5167J.—2nd July 1936.—The orders contained in this department notification No. 9617J., dated the 27th November 1935, published at page 2353, Part I of the *Calcutta Gazette* of the 5th December 1935, appointing Mr. Suresh Chandra Bose to be a Presidency Magistrate in Calcutta for a period of three years from the 15th December 1935 and to sit singly as a Presidency Magistrate, are hereby cancelled.

Leave.

Pabna. No. 5116J.—30th June 1936.—Babu Srish Chandra Chakrabatti, Subordinate Judge and Assistant Sessions Judge of Pabna, is allowed leave on average pay for the period from the 14th June 1936 to the 22nd June 1936, under rules 81 (*b*) (*ii*) and 82 (*b*) of the Fundamental Rules, in extension of the leave already granted to him.

Dacca.—No. 5185J.—10th June 1936.—Babu Jitendra Kumar Biswas, munsif of Narayanganj, in the district of Dacca, is allowed leave on average pay for seventeen days from the 2nd July 1936, under rules 81(*b*)(*ii*) and 82(*b*) of the Fundamental Rules.

Nadia.—No. 5186J.—16th June 1936.—In supersession of the orders of the 24th March 1936, Babu Matilal Das, munsif of Kushtia, in the district of Nadia, is allowed leave on average pay for the period from the 3rd July to the 31st December 1936, under the proviso to rule 81(*b*)(*ii*) of the Fundamental Rules, provided that the leave is spent elsewhere than in India, Ceylon or Nepal and leave on half average pay for the period from the 1st January to the 30th June 1937, under rule 81(*d*) of those Rules.

No. 5187J.—19th June 1936.—In supersession of the orders of the 13th March and the 20th May 1936, Babu Dhirendra Nath Bagchi, munsif, is allowed leave for the period from the 25th February to the 11th July 1936, viz., leave on average pay for three months and seven days, under rules 81(*b*)(*ii*) and 82(*b*) of the Fundamental Rules and leave on half average pay for the remaining period, under rule 81(*d*) of those Rules.

Tippera.—No. 5188J.—22nd June 1936.—Mr. Satish Chandra Bagchi, munsif of Chandpur, in the district of Tippera, is allowed leave on average pay for ten days, under rules 81(*b*) (*ii*) and 82(*b*) of the Fundamental Rules, with effect from the 2nd July 1936.

Resignation.

Rangpur.—No. 5076J.—30th June 1936.—The Governor in Council is pleased to accept the resignation tendered by Khan Bahadur Maulvi Md. Abdul Majid of his appointment as an Honorary Magistrate of the Gaibandha bench in the district of Rangpur.

Powers.

Nadia.—No. 5114J.—30th June 1936.—In exercise of the power conferred by section 14 of the Code of Criminal Procedure, 1898 (Act V of 1898), the Governor in Council is pleased to confer upon Babu Manmatha Nath Guin, an Honorary Magistrate of the Chuadanga bench, the powers of a Magistrate of the second class, in the district of Nadia, for the period during which he has been directed to sit as a member of the said bench—

(*a*) in respect to cases brought before the said bench, within the limits of the jurisdiction of the said bench, and

(*b*) in respect to such cases as may be made over to him, when sitting singly, within the limits of the Chuadanga subdivision of the said district.

Bogra.—No. 5199J.—4th July 1936.—In exercise of the power conferred by section 14 of the Code of Criminal Procedure, 1898 (Act V of 1898), the Governor in Council is pleased to confer upon Babu Jogendra Chandra Choudhuri, an Honorary Magistrate of the Sadar bench, the powers of a Magistrate of the second class, in the district of Bogra, for the period during which he has been directed to sit as a member of the said bench—

(*a*) in respect to cases brought before the said bench within the limits of the jurisdiction of the said bench, and

(*b*) in respect to such cases as may be made over to him, when sitting singly, within the limits of the Sadar subdivision of the said district.

NOTIFICATIONS.

Chittagong.—No. 5169J.—2nd July 1936.—In exercise of the power conferred by section 65 of the Bengal Village Self-Government Act, 1919 (Bengal Act V of 1919), the Governor in Council is pleased to appoint the following members of the union boards mentioned below, to be, during their term of office as such members, union benches within the jurisdiction of the union boards of which they are, respectively, members for the purposes of that section :—

District Chittagong, Sadar subdivision.

Fatikcheri police-station.

Narayanhat union board.

Babu Nibaran Chandra Nandi.
Babu Satis Chandra Pal.
Babu Prosanna Kumar Srithiratna.
Munshi Abdul Rashid Chaudhuri.

Bibirhat union board.

Babu Mahendra Chandra Chaudhuri.
Dr. Nazir Ahmed Siddiqui.
Munshi Siddique Ahamed Chaudhuri.
Munshi Md. Solaiman Chaudhuri.

Doulatpur union board.

Maulvi Hafezor Rahaman Chaudhuri.
Munshi Maquebul Ahamed Chaudhuri.
Munshi Abdul Aziz Chaudhuri.
Munshi Abdul Hye Chaudhuri.
Babu Chandra Kumar Hazari.

Roshangiri union board.

Maulvi Abdul Jalil Chaudhuri.
Munshi Raja Mia Chaudhuri.
Munshi Nural Hoque Mia.
Babu Mahim Chandra Deb.

Hathazari police-station.

Dhalai union board.

Maulvi Sayed Abdul Hye.
Maulvi Serajudulla Chaudhuri.
Munshi Abdul Hakim Chaudhuri.
Munshi Hamdu Mia Chaudhuri.
Munshi Saleh Ahamed Chaudhuri.

Mekhal union board.

Maului Nur Ahamed Chaudhuri.
Maulvi Maslehat Khan Chaudhuri.
Maulvi Rahim Baksh Doctor.
Babu Ramesh Chandra Mohajan.

North Madarsha union board.

Maulvi Sayed Muhammad Nazir Ahamed Kerani.
Maulvi Abdul Kader.
Hajee Md. Ismail Chaudhuri.

Pahartali union board.

Maulvi Abdul Razzak.
Maulvi Ahamedar Rahaman.
Babu Braja Kishore Saha.

Panchalais police-station.

Sholashahar union board.

Munshi Abul Bashar Md. Shyesta Khan.
Maulvi Haji Abdul Latif Sowdagar.
Munshi Ekhlasar Rahaman.
Maulvi Saleh Ahamed.
Babu Nimai Charan Mohajan.

Mohora union board.

Maulvi Abdul Latif Khan.
Munshi Jaji Amin Sharif Chaudhuri.
Munshi Abdul Mabood Khan.

Chittagong.—No. 5170J.—2nd July 1936.—In exercise of the power conferred by section 73 of the Bengal Village Self-Government Act, 1919 (Bengal Act V of 1919), the Governor in Council is pleased to appoint the following members of the union boards mentioned below, to be, during their term of office as such members, union courts within the jurisdiction of the union boards of which they are, respectively, members for the purposes of that section :—

District Chittagong, Sadar subdivision.

Fatikcheri police-station.

Bibirhat union board.

Dr. Nazir Ahamed Siddiqui.
Munshi Abdul Jabbar Chaudhuri.
Maulvi Ahamedar Rahaman.
Babu Jatindra Mohan Aich.
Babu Mahendra Chandra Chaudhuri.

Doulatpur union board.

Maulvi Hafezor Rahaman Chaudhuri.
Munshi Fazlur Rahaman.
Munshi Altafar Rahaman Chaudhuri.
Munshi Maquebul Ahamed Chaudhuri.
Babu Chandra Kumar Hazari.

Hathazari police-station.

Dhalai union board.

Maulvi Sayed Abdul Hye.
Maulvi Serajudulla Chaudhuri.
Munshi Abdul Hakim Chaudhuri.
Babu Chandra Kumar De.

Panchalais police-station.

Sholashahar union board.

Munshi Abul Bashar Md. Shyesta Khan.
Maulvi Haji Abdul Latif Sowdagar.
Munshi Ekhlasar Rahaman.
Babu Nimai Charan Mohajan.

Burdwan.—No. 5173J.—2nd July 1936.—In exercise of the power conferred by section 65 of the Bengal Village Self-Government Act, 1919 (Bengal Act V of 1919), the Governor in Council is pleased to appoint Babu Kartick Chandra Mukharji, a member of the Barakar union board within the Kulti police-station in the Asansol subdivision of the Burdwan district, to be, during his term of office as such member, a member of the union bench within the jurisdiction of the said union board for the purposes of that section, *vice* Babu Gurupada Layak, deceased.

Burdwan.—No. 5174J.—2nd July 1936.—In exercise of the power conferred by section 73 of the Bengal Village Self-Government Act, 1919 (Bengal Act V of 1919), the Governor in Council is pleased to appoint Babu Kartick Chandra Mukharji, a member of the Barakar union board within the Kulti police-station in the Asansol subdivision of the Burdwan district, to be, during his term of office as such member, a member of the union court within the jurisdiction of the said union board for the purposes of that section, *vice* Babu Gurupada Layak, deceased.

Rangpur.—No. 5176J.—2nd July 1936.—In exercise of the power conferred by section 65 of the Bengal Village Self-Government Act, 1919 (Bengal Act V of 1919), the Governor in Council is pleased to appoint Babu Chapal Kristo Bhattacharji, a member of the Nageswari union board within the Nageswari police-station in the Kurigram subdivision of the Rangpur district, to be, during his term of office as such member, a member of the union bench within the jurisdiction of the said union board for the purposes of that section, *vice* Babu Jogesh Chandra Thakurta, removed.

Rangpur.—No. 5177J.—2nd July 1936. In exercise of the power conferred by section 73 of the Bengal Village Self-Government Act, 1919 (Bengal Act V of 1919), the Governor in Council is pleased to appoint Babu Chapal Kristo Bhattacharji, a member of the Nageswari union board within the Nageswari police-station in the Kurigram subdivision of the Rangpur district, to be, during his term of office as such member, a member of the union court within the jurisdiction of the said union board for the purposes of that section, *vice* Babu Jogesh Chandra Thakurta, removed.

Howrah. — No. 5203J. — 6th July 1936.—In exercise of the power conferred by section 65 of the Bengal Village Self-Government Act, 1919 (Bengal Act V of 1919), the Governor in Council is pleased to appoint Babu Dhirendra Nath Pal and Munshi Ershad Ali Mullik, members of the Jagatballavpur union board within the Jagatballavpur police-station in the Sadar subdivision of the Howrah district, to be, during their term of office as such members, members of the union bench within the jurisdiction of the said union board for the purposes of that section, *vice* Babu Sadhan Chandra Ghosh, deceased and Munshi Abdul Aziz, resigned, respectively.

Howrah. — No. 5204J. — 6th July 1936.—In exercise of the power conferred by section 73 of the Bengal Village Self-Government Act, 1919 (Bengal Act V of 1919), the Governor in Council is pleased to appoint Babu Dhirendra Nath Pal and Munshi Ershad Ali Mullik, members of the Jagatballavpur union board within the Jagatballavpur police-station in the Sadar subdivision of the Howrah district, to be, during their term of office as such members, members of the union court within the jurisdiction of the said union board for the purposes of that section, *vice* Babu Sadhan Chandra Ghosh, deceased and Munshi Abdul Aziz, resigned, respectively.

Murshidabad.—No. 5206J.—6th July 1936.—In exercise of the power conferred by section 65 of the Bengal Village Self-Government Act, 1919 (Bengal Act V of 1919), the Governor in Council is pleased to appoint the following members of the union boards mentioned below, to be, during their term of office as such members, union benches within the jurisdiction of the union boards of which they are, respectively, members for the purposes of that section :—

Sadar subdivision, district Murshidabad.

Beldanga police-station.

Bhabta union board.

Maulvi Shaikh Abdur Rashid.
Maulvi Muhammad Ishaque.
Maulvi Madaruddin Ahmed.
Babu Ashutosh Saha.

Beldanga union board.

Munshi Haji Shaikh Abdul Kader.
Babu Anil Kumar Banarji.
Munshi Muhammad Zakaria.
Babu Pramatha Nath Bhaduri.

Ramnagar-Bachhra union board.

Mr. J. deMinvielle.
Babu Bamapada Nandi.
Munshi Sharafat Ali Molla.
Babu Debendra Narayan Sinha.

Domkal police-station.

Jitpur union board.

Babu Radhaballav Kundu.
Babu Amulya Ratan Shaha.
Haji Hedayet-Ulla.
Babu Hemanta Kumar Sarkar.

Domkal union board.

Mr. A. Somerville.
Babu Bhabataran Biswas.
Maulvi Syed Absar Ali.
Babu Srijib Chandra Lahiri.

Hariharpara police-station.

Dharampore union board.

Babu Kalidas Chakrabatti.
Babu Moni Bhusan Goswami.
Munshi Kefat Ulla Mandal.
Babu Debendra Narayan Banarji.

Berhampore Town police-station.

Satui Chowrigachha union board.

Babu Srcepati Sundar Chattoraj.
Babu Jogendra Narayan Palit.
Babu Satkari Chatarji.
Munshi Rahimuddin Sheikh.

Chhaighari-Madanpur union board.

Munshi Nakibuddin Mandal.
Babu Ahi Bhusan Chakrabatti.
Munshi Chandra Mondal.
Babu Hemendra Narayan Banarji.

Nawada police-station.

Madhupur union board.

Babu Nritya Gopal Rudra.
Babu Surendra Nath Mukharji.
Munshi Mahiuddin Fakir.
Munshi Sabdar Ali Biswas.

Patkabari union board.

Mr. E. J. Calvert.
Babu Bholanath Banarji.
Munshi Khosbar Hossain Biswas.
Munshi Soleman Biswas.

2. This notification will take effect from the date of the first meeting of the reconstituted union boards at which a quorum is present.

Murshidabad.—No. 5207J.—6th July 1936.—In exercise of the power conferred by section 73 of the Bengal Village Self-Government Act, 1919 (Bengal Act V of 1919), the Governor in Council is pleased to appoint the following members of the union boards mentioned below, to be, during their term of office as such members, union courts within the jurisdiction of the union boards of which they are, respectively, members for the purposes of that section :—

Sadar subdivision, Murshidabad district.

Beldanga police-station.

Bhabta union board.

Maulvi Sheikh Abdur Rashid.
Maulvi Muhammad Ishaque.
Maulvi Madaruddin Ahmed.
Babu Ashutosh Saha.

Beldanga union board.

Munshi Haji Shaikh Abdul Kader.
Babu Anil Kumar Banarji.
Munshi Muhammad Zakaria.
Babu Pramatha Nath Bhaduri.

Ramnagar-Bachhra union board.

Mr. J. deMinvielle.
Babu Bamapada Nandi.
Munshi Sharafat Ali Molla.
Babu Debendra Narayan Sinha.

Domkal police-station.

Jitpur union board.

Babu Radhaballav Kundu.
Babu Amulya Ratan Shaha.
Haji Hedayet-Ulla.
Babu Hemanta Kumar Sarkar.

Domkal union board.

Mr. A. Somerville.
Babu Bhabataran Biswas.
Maulvi Syed Absar Ali.
Babu Srijib Chandra Lahiri.

Hariharpara police-station.

Dharampore union board.

Babu Kalidas Chakrabatti.
Babu Moni Bhusan Goswami.
Munshi Kefat Ulla Mandal.
Babu Debendra Narayan Banarji.

Berhampore Town police-station.

Satui Chowrigachha union board.

Babu Sreepati Sundar Chattoraj.
Babu Jogendra Narayan Palit.
Babu Satkari Chatarji.
Munshi Rahimuddin Sheikh.

Chhaighari-Madanpur union board.

Munshi Nakibuddin Mandal.
Babu Ahi Bhusan Chakrabatti.
Munshi Chandra Mondal.
Babu Hemendra Narayan Banarji.

Nawada police-station.

Madhupur union board.

Babu Nritya Gopal Rudra.
Babu Surendra Nath Mukharji.
Munshi Mahiuddin Fakir.
Munshi Sabdar Ali Biswas.

Patkabari union board.

Mr. E. J. Calvert.
Babu Bholanath Banarji.
Munshi Khosbar Hossain Biswas.
Munshi Soleman Biswas.

2. This notification will take effect from the date of the first meeting of the reconstituted union boards at which a quorum is present.

Tippera.—No. 5209J.—6th July 1936.—In exercise of the power conferred by section 65 of the Bengal Village Self-Government Act, 1919 (Bengal Act V of 1919), the Governor in Council is pleased to appoint Munshi Mahammad Daragali, a member of the Homna union board within the Homna police-station in the Sadar (North) subdivision of the Tippera district, to be, during his term of office as such member, a member of the union bench within the jurisdiction of the said union board for the purposes of that section, *vice* Maulvi Ramijaddin Ahmed Khan, resigned.

Tippera.—No. 5210J.—6th July 1936.—In exercise of the power conferred by section 73 of the Bengal Village Self-Government Act, 1919 (Bengal Act V of 1919), the Governor in Council is pleased to appoint Munshi Mahammad Daragali, a member of the Homna union board within the Homna police-station in the Sadar (North) subdivision of the Tippera district, to be, during his term of office as such member, a member of the union court within the jurisdiction of the said union board for the purposes of that section, *vice* Maulvi Ramijaddin Ahmed Khan, resigned.

T. ROXBURGH,
Secy. to the Govt. of Bengal (offg.).

LOCAL SELF-GOVERNMENT DEPARTMENT.

NOTIFICATIONS.

Minister-in-charge: The Hon'ble Sir Bijoy Prasad Singh Roy, Kt.

24-Parganas.—No. 5344M.—27th June 1936.—The following draft of by-laws, which has been framed by the Commissioners of the Tollygunge Municipality, in the district of 24-Parganas, under section 460 of the Bengal Municipal Act, 1932 (Bengal Act XV of 1932), and which the Government of Bengal (Ministry of Local Self-Government) propose to confirm under section 506 of the Act, is published for the information of persons likely to be affected thereby.

2. The draft will be taken into consideration on the 1st October 1936, and any objection or suggestion received by the undersigned through the District Magistrate and the Divisional Commissioner before that date will be duly considered :—

Draft by-laws.

By-laws regulating sarais, dharamsalas *and other lodging-houses.*

Penalties.

1. *Fine.*—The penalty for infringement of any of the following by-laws shall be—

(*a*) a fine not exceeding the sum stated at the foot of the by-law,

(*b*) in the case of a second or subsequent conviction for a similar offence, a fine not exceeding the sum (if any) stated in that behalf at the foot of the by-law.

Registration and inspection of sarais, dharamsalas *and other lodging-houses.*

2. The owner of each *sarai*, *dharamsala* or lodging-house shall have the same registered in the office of the commissioners and shall specify at the time of registration the number of persons to be accommodated in each room thereof.

Fine, Rs. 10.

3. The owner or person in charge of each *sarai*, *dharamsala* or lodging-house shall permit the same to be inspected at any time by any officer authorised in that behalf by the commissioners at a meeting.

Fine, Rs. 10.

Prevention of overcrowding and uncleanliness.

4. The owner or person in charge of any *sarai*, *dharamsala* or lodging-house shall not allow any room therein to be occupied at any time by a larger number of persons than may be provided with a floor space of not less than 25 square feet and a cubic space of not less than 250 cubic feet per adult person.

Explanation.—Two children under ten years of age shall be counted as one adult person for the purposes of this by-law.

Fine, Rs. 10.

5. The owner or person in charge of a *sarai*, *dharamsala* or lodging-house shall see that the rooms and other parts thereof and the surroundings thereof are kept clean and well-ventilated and that proper and sufficient arrangements are made for conservancy with separate privies and urinals for the use of males and females, and for drinking water for the use of the inmates.

Fine, Rs. 10.

Precautions in the case of outbreak of infectious diseases.

6. In the event of an outbreak of any infectious or contagious disease in a *sarai*, *dharamsala* or lodging-house, the owner or person in charge thereof shall at once give information to the commissioners respecting the existence of such disease.

Fine, Rs. 10 ; on a second or subsequent conviction, Rs. 50.

7. If any person is attacked with an infectious or contagious disease in a *sarai*, *dharamsala* or lodging-house, the owner or person in charge thereof shall take immediate steps for the segregation of other healthy inmates thereof and shall adopt such precautionary measures as may be directed by the commissioners.

Fine, Rs. 10 ; on a second or subsequent conviction, Rs. 50.

General.

8. The owner or person in charge of a *sarai*, *dharamsala* or lodging-house shall not allow the same to be used for immoral purposes.

Fine, Rs. 10.

9. The owner or the person in charge of a *sarai*, *dharamsala* or lodging-house shall not allow a leper or other person suffering from an open sore or any loathsome or contagious disease to be employed in or to assist in the carrying on of any business in, or to enter or occupy any portion of such place.

Fine, Rs. 10.

24-Parganas.—No. 5346M.—27th June 1936.—The following draft of by-laws, which has been framed by the Commissioners of the Tollygunge Municipality, in the district of 24-Parganas, under section 392(*i*) of the Bengal Municipal Act, 1932 (Bengal Act XV of 1932), and which the Government of Bengal (Ministry of Local Self-Government) propose to confirm under section 506 of the Act, is published for the information of persons likely to be affected thereby.

2. The draft will be taken into consideration on the 1st October 1936, and any objection or suggestion received by the undersigned through the District Magistrate and the Divisional Commissioner before that date will be duly considered :—

Draft by-laws.

By-laws for the prevention of the spread of anthrax.

1. If so required by the Commissioners for the prevention of anthrax, every case of sudden death of an animal shall be reported to them for proper investigation as to the existence of anthrax within the municipal limits.

2. The carcass of an animal known or suspected to have died of anthrax shall not be skinned, but the whole carcass shall be disposed of either by burning completely or by burial in lime. In the latter case the carcass shall be buried in quicklime at a depth of at least six feet below the ground level.

3. Whenever the removal of the carcass of an animal suspected to have died of anthrax to a place of disposal is decided upon, the removal shall be conducted under the strict supervision of the Health Officer or other competent officer appointed by the Commissioners in this behalf with due regard to measures necessary to prevent the spread of infection therefrom.

4. Every stable in which an animal has died of anthrax shall be thoroughly disinfected with suitable material. For lime-wash the Commissioners may require that four ounces of chloride of lime containing 33 per cent. of available chlorine should be mixed with every gallon of water.

5. The wool, fur or hair of animals known or suspected to have contracted anthrax, if already collected, shall be destroyed at once and the place or places where such materials were kept shall be thoroughly disinfected in the manner laid down in by-law 4.

6. When required by the Commissioners to do so for the prevention of spread of anthrax, the owners or managers of tanneries or woollen mills shall not dispose of any trade waste or refuse from such tanneries or mills which has been exposed to infection or contagion except by burning or after proper disinfection in the manner specified by the Commissioners.

For the above purpose a mixture of half a pint of commercial carbolic acid per gallon of waste water from tanneries may be used.

7. Whoever commits a breach of any of the preceding by-laws 1 to 6 shall be liable to a fine which may extend to Rs. 50.

24-Parganas.—No. 5384M.—29th June 1936.—In exercise of the power conferred by section 506 of the Bengal Municipal Act, 1932 (Bengal Act XV of 1932), the Government of Bengal (Ministry of Local Self-Government) are pleased to confirm the by-laws framed by the Commsisioners of the South Dum Dum Municipality, in the district of the 24-Parganas, under section 375(*a*) of the said Act and published for information under notification No. 508M., dated the 25th January 1936.

24-Parganas.—No. 5461M.—2nd July 1236.—In exercise of the power conferred by section 506 of the Bengal Municipal Act, 1932 (Bengal Act XV of 1932), the Government of Bengal (Ministry of Local Self-Government) are pleased to confirm the by-laws framed by the Commissioners of the Tollygunge Municipality, in the district of the 24-Parganas, under section 329 of the said Act and published for information under notification No. 2616M., dated the 23rd April 1936.

No. 5489L.S.-G. 2nd July 1936.—Babu Digendra Nath Dutt, B.Sc., B.E., A.M.I.E., is temporarily appointed as Assistant Engineer under the Special Officer, Road Development Projects, for a period of ten months, with effect from the 1st March 1936.

No. 5506M.—4th July 1936.—The following draft of an amendment which, in exercise of the power conferred by clause (*b*) of section 65 of the Bengal Municipal Act, 1932 (Bengal Act XV of 1932), the Government of Bengal (Ministry of Local Self-Government) propose to make in the rules published with notification No. 5941M., dated the 2nd November 1933, is published for the information of persons likely to be affected thereby.

2. The draft will be taken into consideration on or after the 15th September 1936, and any objection or suggestion received by the undersigned through the District Magistrates before that date will be duly considered :—

Draft Amendment.

After the proviso to rule 3 *add* the following :—

"Provided further that the Commissioners at a meeting may grant out of the municipal fund to their Chairman or Vice-Chairman actual travelling expenses incurred by him for journey within the municipality for carrying out any of the purposes of the Act subject to the maximum mentioned below :—

	Maximum travelling expense per month.
	Rs.
(1) In a municipality with an average annual income below Rs. 50,000 ..	25
(2) In a municipality with an average annual income of Rs. 50,000 and upwards but below Rs. 1,00,000 ..	30
(3) In a municipality with an average annual income of Rs. 1,00,000 and upwards but below Rs. 2,00,000	40
(4) In a municipality with an average annual income of Rs. 2,00,000 and upwards	50

3. This supersedes notification No. 217M., dated the 14th January 1936.

CORRIGENDUM.

Minister-in-charge: The Hon'ble Sir Bijoy Prasad Singh Roy, Kt.

Hooghly.—No. 5497L.S.-G.—3rd July 1936.—In Government notification No. 5147L.S.-G., dated the 25th June 1936, published at page 1554 of the *Calcutta Gazette*, dated the 2nd July 1936, publishing the names of the elected and appointed members of the Hooghly district board make the following correction :—

Members elected by the Sadar local board—*for* "Babu Nagendra Nath Sen, B.L." *read* "Babu Narendra Nath Sen, B.L."

Medical.

Minister-in-charge: The Hon'ble Sir Bijoy Prasad Singh Roy, Kt.

Burdwan.—No. 278T.Medl.—19th June 1936.—Captain E. H. Lossing, M.D., I.M.S., is appointed as Civil Surgeon, Burdwan, until further orders.

Calcutta.—No. 281T. Medl.—19th June 1936.—Dr. Madan Mohan Datta, Teacher of Physiology, Campbell Medical School, Calcutta, is granted leave on average pay for the period from the 8th June 1936 to the 7th October 1936, preparatory to retirement under rules 81(*b*)(*ii*) and 82(*b*) of the Fundamental Rules.

Calcutta.—No. 286T.Medl.—20th June 1936.—Temporary Assistant Surgeon Dr. Sudhansu Kumar Ganguly, a Demonstrator of Anatomy, Medical College, Calcutta, was granted leave for the period from the 14th August 1935 to the 30th September 1935, viz., earned leave for four days and extraordinary leave for the remaining period, under rules 11(*a*) and 17(*1*)(*a*) respectively of the Bengal Services (Revision of Leave) Rules, 1934.

Calcutta.—No. 287T.Medl.—20th June 1936.—Temporary Assistant Surgeon Dr. Sudhansu Mohan Ghosh was appointed to act as a Demonstrator of Anatomy, Medical College, Calcutta, for the period from the 4th September 1935 to the 10th September 1935.

Calcutta.—No. 288T.Medl.—20th June 1936.—Temporary Assistant Surgeon Dr. Lutfar Rahman was appointed to act as a Demonstrator of Anatomy, Medical College, Calcutta, for two days, viz., the 11th and 12th September 1935.

Calcutta.—No. 289T.Medl.—20th June 1936.—Temporary Assistant Surgeon Dr. Sudhansu Kumar Ganguly was placed on supernumerary duty at the Medical College Hospitals, Calcutta, for the period from the 13th October 1935 to the 6th November 1935.

He was appointed to act as a Demonstrator of Anatomy, Medical College, Calcutta, for two days, viz., the 7th and 8th November 1935, *vice* Dr. Nripendra Chandra Chatterjee, granted leave.

2. He is placed on supernumerary duty at the Medical College Hospitals, Calcutta, with effect from the 9th November 1935.

Calcutta.—No. 292T.Medl.—20th June 1936.—Dr. Pramada Sanker Bhattacharjee, officiating 3rd Assistant Chemical Examiner to the Government of Bengal was granted leave on average pay for one month, under rule 81(*b*) *ii*) of the Fundamental Rules, with effect from the 1st April 1936.

Dinajpur.—No. 295T.Medl.—20th June 1936.—Dr. Aghore Nath Ghose, Civil Surgeon, Dinajpur, was granted privilege leave on full pay for eighty days, under Article 260, Civil Service Regulations, with effect from the 6th February 1936.

2. This department's notifications No. 834-Medl., dated the 20th February 1936, and No. 69T.Medl., dated the 7th May 1936, are hereby cancelled.

Calcutta. -No. 299T.Medl.—22nd June 1936.—Dr. Khagendra Bhusan Ghose, Assistant Radiologist, Medical College Hospitals, Calcutta, is allowed leave on average pay for the period from the 18th May 1936 to 6th June 1936, under rule 81 (*b*)(*ii*) of the Fundamental Rules.

Dacca.—No. 2795Medl.—27th June 1936.—Dr. Dhirendra Nath Mitra, Teacher of Midwifery, Dacca Medical School, is granted leave on average pay for the period from the 14th May to the 5th June 1936, under rules 81(*b*) (*ii*) and 82(*b*) of the Fundamental Rules.

Dacca.—No. 2798Medl.—27th June 1936.—Dr. Narendra Kishore Roy, Teacher of Medical Jurisprudence and Hygiene, Dacca Medical School, is granted leave on average pay for the period from 14th to the 31st May 1936, under rules 81(*b*) (*ii*) and 82(*b*) of the Fundamental Rules.

Dacca.—No. 2801Medl.—29th June 1936.—Dr. Prafulla Prasun Choudhury, Teacher of Physiology, Dacca Medical School, is granted leave on average pay for the period from the 14th to the 31st May 1936, under rules 81(*b*)(*ii*) and 82(*b*) of the Fundamental Rules.

Dacca.—No. 2804Medl.—29th June 1936.—Dr. Nitya Ranjan Gupta, Teacher of Pathology and Bacteriology, Dacca Medical School, is granted leave on average pay for the period from the 14th to the 31st May 1936, under rules 81(*b*)(*ii*) and 82(*b*) of the Fundamental Rules.

Burdwan.—No. 2807Medl.—29th June 1936.—Dr. Ganesh Chandra Sarkar, Teacher of Medicine, Ronaldshay Medical School, Burdwan, was granted leave on average pay for the period from the 6th to the 28th May 1936, under rules 81(*b*)(*ii*) and 82(*b*) of the Fundamental Rules.

2. This department notification No. 132T.-Medl., dated the 16th May 1936, is hereby cancelled.

Darjeeling.—No. 2823Medl.—30th June 1936.—Dr. Kali Prosad Singh Roy, Assistant Surgeon, is placed on supernumerary duty at the Eden Sanitarium and Hospital, Darjeeling, with effect from the 23rd April 1936.

NOTIFICATION.

Minister-in-charge: The Hon'ble Sir Bijoy Prasad Singh Roy, Kt.

Chittagong.—No. 320T.Medl.—24th June 1936.—The following gentlemen are appointed to be non-official members of the committee for the management of the Chittagong General Hospital, as representatives of the Chittagong Municipality in place of the existing representatives :—

Dr. Mahim Chandra Das Gupta.

Maulvi Sheikh Rafiuddin Ahmed Siddiquee.

G. S. DUTT,

Secy. to the Govt. of Bengal.

EDUCATION DEPARTMENT.

NOTIFICATIONS.

Minister-in-charge: The Hon'ble Khan Bahadur M. Azizul Haque.

Rajshahi.—No. 3552T.Edn.—24th June 1936.—Babu Jitendra Kumar Chakrabatti, Lecturer in the Subordinate Educational Service, acted in the Bengal Educational Service (revised scale) as Professor of Philosophy, Rajshahi College, for the period from the 27th August 1935 to the 9th January 1936 (both days inclusive).

This cancels notification No. 506Edn., dated the 15th February 1936.

Malda.—No. 3574T.Edn.—26th June 1936.—Maulvi Khabiruddin Ahmed, officiating District Inspector of Schools, Malda, is appointed substantively to the post and in the Bengal Educational Service, with effect from the 20th April 1936, *vice* Khan Sahib Maulvi Abdur Rahman Khan, retired.

Rajshahi.—No. 3575T.Edn.—26th June 1936.—Babu Sudhansu Nath Ghosh, officiating District Inspector of Schools, Rajshahi, is appointed substantively to the post and in the Bengal Educational Service, with effect from the 1st June 1936, *vice* Maulvi Sabkatuddin Ahmed, retired.

Dacca. — No. 2035Edn. — 30th June 1936. — Mr. Samarendra Kishore Datta, Lecturer in History, Intermediate classes attached to the Eden High School for Girls, Dacca, is appointed to act in the Bengal Educational Service as Professor, Teachers' Training College, Dacca, with effect from 1st July 1936, the date on which the college will re-open after the current summer vacation or any subsequent date on which he joins the appointment, *vice* Babu Aswini Kumar Datta, on leave, or until further orders.

Calcutta.—No. 2041Edn. — 30th June 1936. — Mahamahopadhyaya Pandit Jogendra Nath Vedantatirtha, Lecturer in Vedanta, in the Tol Departm nt of the Sanskrit College, Calcutta, is appointed to act in the Bengal Educational Service, until further orders, as Professor of Nyay, in the Tol Department of the college, with effect from the 2nd July 1936, or any subsequent date on which he assumes the duties of the post, *vice* Mahamahopadhyaya Pandit Kunja Behari Tarkasiddhanta, deceased.

Hooghly.—No. 2052Edn.—2nd July 1936.—Babu Pramatha Nath Banarji, District Inspector of Schools, is posted to Hooghly, with effect from the date on which he joins the appointment on the expiry of his leave, *vice* Babu Satya Prasad Biswas, retired.

Dacca Divn. —No. 2071-Edn —3rd July 1936. —Mrs. Nishamoyee Bhattacharjee, Assistant Inspectress of Schools, Dacca Division (Dacca), is allowed leave on half average pay for the period from the 2nd to the 11th May 1936, under rule 81(*d*) of the Fundamental Rules, in extension of the leave already granted to her.

Calcutta.—No. 2073 Edn.—3rd July 1936.—Mr. Bhupati Mohan Sen, Principal, Presidency College, Calcutta, is allowed leave on average pay on medical certificate, under rules 81(*b*) (*i*) and 82 (*b*) of the Fundamental Rules, for the period from 23rd April to 2nd May 1936 (both days inclusive), in combination with the summer vacation of the college extending from the 3rd May to the 1st July 1936, under rule 82 (*d*) of those Rules.

Birbhum.—No. 2075 Edn.—3rd July 1936.—Babu Bama Charan Das, officiating Head Master, Birbhum Zilla School, is confirmed in the appointment and in the Bengal Educational Service, with effect from the 30th October 1935, *vice* Mr. Maniruddin Tarafdar, transferred.

Dacca - Calcutta - Jalpaiguri.—No. 2080Edn. — 3rd July 1936.—Mr. Abdur Razzak Akhunji, Superintendent, Dacca Normal School, now under orders of transfer to the David Hare Training College, Calcutta, to act as a Professor in that College, is appointed to be Head Master, Jalpaiguri Zilla School, with effect from the date on which he is relieved of his present appointment at Dacca, but he will act until further orders as Professor, David Hare Training College, Calcutta.

Rangpur - Dacca. — No. 2081Edn. — 3rd July 1936.—Mr. Abdur Razzak, Superintendent, Rangpur Normal School, is appointed to be Superintendent, Dacca Normal School, *vice* Mr. Abdur Razzak Akhunji, transferred.

Mymensingh-Rangpur. — No. 2082Edn.—3rd July 1936.—Mr Kumud Bandhu Sen Gupta, Head Master, Jamalpur Government High School, is appointed to be Superintendent, Rangpur Normal School, *vice* Mr. Abdur Razzak, transferred.

Jalpaiguri-Mymensingh.—No. 2083 Edn.—3rd July 1936.—Babu Surendra Nath Sen, Head Master, Jalpaiguri Zilla School, is appointed to be Head Master, Jamalpur Government High School, *vice* Mr. Kumud Bandhu Sen Gupta, transferred.

Nadia-Jalpaiguri. — No. 2084Edn. — 3rd July 1936.—Babu Girindra Nath Mukherji, Assistant Head Master, Krishnagar Collegiate School, is appointed to act as Head Master, Jalpaiguri Zilla School, and in the Bengal Educational Service, *vice* Mr. Abdur Razzak Akhunji, on deputation, or until further orders.

Dacca - Dinajpur. — No. 2085Edn. — 3rd July 1936.—Babu Manmatha Nath Chakravarti, Assistant Master, Armenitola Government High School, Dacca, is appointed to act as Head Master, Dinajpur Zilla School, and in the Bengal Educational Service, *vice* Babu Srimanta Sarkar, retired, or until further orders.

Dacca-Presidency Divisions.—No. 2097Edn.—6th July 1936.—Miss Prabhash Nalini Das, Assistant Mistress, Hindu Female Training School, Calcutta, now officiating Assistant Inspectress of Schools, Dacca Division (Bakarganj and Faridpur), is appointed to act as Assistant Inspectress of Schools, Presidency Division (Nadia and Murshidabad), and in the Bengal Educational Service (Women's Branch), with effect from the date on which she joins the appointment, during the absence, on leave, of Miss Mrinalini Bose, or until further orders.

ERRATUM.

Minister-in-charge: The Hon'ble Khan Bahadur M. Azizul Haque.

No. 2104Edn.—6th July 1936.—In resolution No. 3221T.Edn., dated the 2nd June 1936, reconstituting the Bengal Sanskrit Association published on pages 1263-1265, of Part I of the *Calcutta Gazette*, dated the 11th June 1936, read under heading

Patrons of Sanskrit Learning (10).

9. Pandit Bipin Bihari Jyotis Shastri of Tippera, 16, Kasi Mitter Street, Calcutta—Chittagong Division.

for

9. Pandit Bipin Bihari Jyotis Shastri of Tippera, 16, Kasi Datta Street, Calcutta—Chittagong Division.

Registration.

NOTIFICATIONS.

Minister-in-charge: The Hon'ble Khan Bahadur M. Azizul Haque.

Calcutta.—No. 3532T.Regn.—23rd June 1936.—Khan Sahib Quazi Muhammad-ur-Rahman, Sub-Registrar of Calcutta, is appointed to act as Registrar of Calcutta, with effect from the 1st June 1936, during the absence, on leave, of Rai Sahib Mohim Chandra Batabyal, or until further orders.

This cancels the order in notification No. 3248T.Regn., dated the 3rd June 1936.

Calcutta.—No. 3533T.Regn.—23rd June 1936.—Maulvi Qara Hossain Qaiser Mirza, Joint Sub-Registrar of Calcutta, is appointed to act as Sub-Registrar of Calcutta, with effect from the 1st June 1936, *vice* Khan Sahib Quazi Muhammad-ur-Rahman.

This cancels the order in notification No. 3249T.Regn., dated the 3rd June 1936.

Chittagong.—No. 3536T.Regn.—23rd June 1936.—Maulvi Saleh Ahmed, District Sub-Registrar, Chittagong, is allowed leave on average pay for ten days, with effect from 1st June 1936, under rule 81 (*b*) (*ii*) of the Fundamental Rules.

Chittagong.—No. 3542T.Regn.—23rd June 1936.—Mr. J. D. Moreino, Sadar Joint Sub-Registrar of Chittagong, is appointed to act as District Sub-Registrar of that place, with effect from the date on which he took over charge, during the absence, on leave, of Maulvi Saleh Ahmed, or until further orders.

Noakhali.—No. 3549T.Regn.—24th June 1936.—Khan Sahib Maulvi Abdul Hamid (No. II), District Sub-Registrar of Noakhali, is allowed leave on average pay for one month, with effect from 4th June 1936, under rule 81 (*b*) (*ii*) of the Fundamental Rules, in extension of the leave already granted to him.

No. 430Regn.—30th June 1936—Maulvi Abul Khair Mohammad Yusuff, District Sub-Registrar, is allowed leave on half average pay for three months and thirteen days, with effect from the 24th May 1936, under rule 81 (*d*) of the Fundamental Rules, in extension of the leave granted to him in notification No. 162Regn., dated the 27th February 1936.

Bakarganj.—No. 434Regn.—6th July 1936.—In exercise of the power conferred by section 3 of the Bengal Muhammadan Marriages and Divorces Registration Act, 1876 (Bengal Act I of 1876), the Government of Bengal (Ministry of Education) are pleased to appoint Maulvi Abul Kasem Md. Hashem temporarily to be a Muhammadan Registrar within the police-station of Banaripara, in the district of Bakarganj, during the absence, on leave, of Maulvi A. F. M. Fazlul Haq, or until further orders.

Bakarganj.—No. 435Regn.—6th July 1936.—In exercise of the power conferred by section 2 of the Kazis Act, 1880 (Act XII of 1880), the Government of Bengal (Ministry of Education) are pleased to appoint Maulvi Abul Kashem Md. Hashem temporarily to be the Kazi for the celebration of marriages and the performance of other rites and ceremonies with the police-station of Banaripara, in the district of Bakarganj, during the absence, on leave, of Maulvi A. F. M. Fazlul Huq, or until further orders.

H. GRAHAM,
Secy. to the Govt. of Bengal.

Orders by the Inspector-General of Registration, Bengal.

24-Parganas.—No. 375.—26th June 1936.—Babu Lakshmi Narayan Das, probationary Sub-Registrar attached to the Sadar Registration office at Alipore, in the district of the 24-Parganas, is allowed leave for fourteen days, viz., earned leave for five days, under rule 9 of the Bengal Services (Revision of Leave) Rules, 1934, with effect from the 5th June 1936, and leave, on medical certificate, under rule 16 of the same Rules, for the remaining period.

Dinajpur.—No. 376.—26th June 1936.—Babu Manindra Nath Maitra, Sub-Registrar of Gangarampur, in the district of Dinajpur, is appointed to be Sub-Registrar of Balurghat in the same district.

Dinajpur.—No. 377.—26th June 1936.—Babu Atulya Dhan Bagchi, Sub-Registrar of Balurghat, in the district of Dinajpur, on leave, is appointed to be Sub-Registrar of Gangarampur in the same district.

Dinajpur.—No. 378.—26th June 1936.—Maulvi Abdur Rashid, Sub-Registrar of Raiganj, in the district of Dinajpur, is appointed to be Sub-Registrar of Thakurgaon in the same district.

Dinajpur.—No. 379.—26th June 1936.—Maulvi Amiruddin Ahmed, Sub-Registrar of Thakurgaon, in the district of Dinajpur, is appointed to be Sub-Registrar of Raiganj in the same district.

Dinajpur.—No. 380.—26th June 1936.—Babu Atulya Dhan Bagchi, Sub-Registrar of Balurghat, in the district of Dinajpur, is allowed leave on average pay for seven weeks, under rule 81(*b*)(*ii*) of the Fundamental Rules, with effect from the 20th June 1936.

Dinajpur.—No. 381.—26th June 1936.—Maulvi Tajuddin Ahmed, Sub-Registrar attached to Dinjapur, is appointed to act as Sub-Registrar of Balurghat in the same district, with effect from the 22nd June 1936, during the absence, on leave, of Babu Atulya Dhan Bagchi, Sub-Registrar, or until further orders.

Khulna-Jessore.—No. 382.—27th June 1936.—Maulvi Badiuzzaman, Sub-Registrar attached to the Sadar Registration office at Jessore, officiating as Joint Sub-Registrar of Kaliganj at Assasuni, in the district of Khulna, is allowed leave on average pay for five days, under rule 81(*b*)(*ii*) of the Fundamental Rules, in extension of the leave granted to him in this department notification No. 294, dated the 21st May 1936.

Jessore-Khulna.—No. 383.—29th June 1936.—Babu Bhababhuti Bhattacharji, Sub-Registrar attached to Jessore, officiating at present as Joint Sub-Registrar of Manirampur at Noapara in the same district, is posted to the headquarters station of the district of Khulna.

Birbhum-Howrah.—No. 384.—29th June 1936.—Babu Ananga Mohan Ray, Sub-Registrar of Dubrajpur, in the district of Birbhum, is appointed to be Sub-Registrar of Syampur, in the district of Howrah.

Howrah-Birbhum.—No. 385.—29th June 1936.—Babu Panchanan Mukherji, Sub-Registrar of Syampur, in the district of Howrah, is appointed to be Sub-Registrar of Dubrajpur, in the district of Birbhum.

Jessore-Birbhum.—No. 386.—29th June 1936.—Babu Bimalapada Mukherji, Sub-Registrar, on leave, is appointed to be Sub-Registrar of Labpur, in the district of Birbhum.

This cancels this department notification No. 314, dated the 8th June 1936, appointing him to be Sub-Registrar of Manirampur, in the district of Jessore.

Birbhum-Jessore.—No. 387.—29th June 1936.—Babu Bhudeb Chatterji, Sub-Registrar of Labpur, in the district of Birbhum, is appointed to be Sub-Registrar of Manirampur, in the district of Jessore.

Mymensingh.—No. 388.—30th June 1936.—Maulvi Mozammel Haq, Sub-Registrar of Madarganj, in the district of Mymensingh, is allowed leave on average pay for one month, under rule 81(*b*) (*ii*) of the Fundamental Rules, with effect from the 1st June 1936.

Noakhali.—No. 389.—30th June 1936.—Babu Kamalini Kanta Sinha Ray, Joint Sub-Registrar of Chhagalnaia at Fulgazi, in the district of Noakhali, is allowed leave for fifteen days, viz., leave on average pay for eight days, under rule 81 (*b*) (*ii*) of the Fundamental Rules, with effect from the 6th June 1936, and leave on half average pay for the remaining period, under rule 81 (*d*) of the same Rules.

Faridpur.—No. 390.—30th June 1936.—Maulvi Mir Sarwarjan, Sub-Registrar of Goalundo (at Rajbari), in the district of Faridpur, is appointed to be Sub-Registrar of Bhanga in the same district.

Khulna-Faridpur.—No. 391.—30th June 1936.—Babu Mohini Ranjan Bhattacharji, Sub-Registrar of Paikgacha, in the district of Khulna, is appointed to be Sub-Registrar of Goalundo (at Rajbari), in the district of Faridpur.

This cancels this department notification No. 333, dated the 11th June 1936, appointing him to be Sub-Registrar of Satkhira, in the district of Khulna.

Faridpur.—No. 392.—30th June 1936.—Maulvi Khondkar Waliul Huq, Sub-Registrar of Bhanga, in the district of Faridpur, since deceased, was on leave on average pay for twelve days, under rule 81 (*b*) (*ii*) of the Fundamental Rules, from the 5th June 1936 to the 16th June 1936 (inclusive).

Faridpur.—No. 393.—30th June 1936.—Babu Rathindra Nath Biswas, Sub-Registrar attached to Faridpur, is appointed to act, as Sub-Registrar of Bhanga in the same district, with effect from the 11th June 1936 till relieved by Maulvi Mir Sarwarjan, or until further orders.

Tippera.—No. 394.—30th June 1936.—Maulvi Khadem Rasul, Sub-Registrar of Nasirnagar, in the district of Tippera, is allowed leave on half average pay for two days, under rule 81 (*b*) (*ii*) of the Fundamental Rules, in extension of the leave granted to him in this department notification No. 229, dated the 16th April 1936.

Faridpur-24-Parganas.—No. 395.—2nd July 1936.—Babu Kalyan Kumar Das Gupta, Sub-Registrar attached to the Sadar Registration office at Faridpur, is posted temporarily to the headquarters station of the district of the 24-Parganas at Alipore.

24-Parganas.—No. 396.—3rd July 1936.—Babu Sudhir Kumar Biswas, Sub-Registrar attached to the Sadar Registration office of the district of the 24-Parganas at Alipore, is allowed leave on average pay for one month, under rule 81 (*b*) (*ii*) of the Fundamental Rules, in extension of the leave granted to him in this department notification No. 352, dated the 19th June 1936.

S. CHATTERJEA,

Inspector-General of Registration, Bengal.

MARINE DEPARTMENT.

NOTIFICATION.

No. 19Mne.— 2nd July 1936.—The following draft of rules, which, in exercise of the powers conferred by clause (*j*) of sub-section (*2*) of section 52 of the Inland Steam-Vessels Act, 1917 (I of 1917), the Governor in Council proposes to make for regulating the navigation of inland steam-vessels in certain portions of the river Hooghly, in supersession of the rules published under this department notification No. 105-Mne., dated the 4th August 1914, is published for the information of persons likely to be affected thereby.

The draft rules will be taken into consideration on or after the 9th August 1936, and any objection or suggestion with regard thereto received by the undersigned before that date will be duly considered :—

Draft Rules.

1. Inland steam-vessels navigating the Hooghly between the Lower College Sand Buoy and Hospital Point shall be navigated on the shallow side of the channel when meeting ocean going vessels.

2. No inland steam-vessel shall navigate the channel between the Lower College Sand Buoy and the Panchpara Crossing when ocean going vessels are under weigh and about to turn, either on the flood or ebb tide. Inland steam-vessels shall heave to on the College Sand, if they are above the ocean going steamers, and off the Lower Hughli Jute Mill, if they are below them, until such time as the ocean going steamers have completed the manœuvre of turning round.

3. On Panchpara Crossing and in Sankral Reach, inland steam vessels shall navigate on the edge of Sankral Sand.

4. In Jarmakers Reach, inland steam-vessels shall navigate on the edge of Munnikhali Sand.

5. In Kofree Reach, inland steam-vessels shall navigate on the edge of Kofree Sand.

6. In the upper part of Buj Buj Reach, inland steam-vessels shall navigate on the right bank of the river ; in the lower part of Buj Buj Reach, they shall navigate on the edge of Buj Buj Sand.

7. No inland steam-vessel shall navigate the channel between the Fort Gloster Flat Buoy, and the Irrigation canal on the left bank of the river, when ocean going steamers are under weigh and about to turn, on either the flood or ebb tide.

8. At Poojali, Ulubaria or Achipur Reaches, inland steam-vessels shall navigate on the edge of the sand off the left bank of the river.

9. On Moyapore Bar, inland steam-vessels shall navigate the shallow tracks.

10. In Royapore Reach, inland steam-vessels shall navigate on the edge of Royapore Sand.

11. On Royapore Bar, inland steam-vessels shall navigate the shallow tracks.

12. In Brul Reach, inland steam-vessels shall navigate on the edge of Brul Sand.

13. In Fisherman's and Fulta Reaches, inland steam-vessels shall navigate on the edge of Fulta Sand.

14. In Nynan Reach, inland steam-vessels shall navigate on the edge of Shipgunge Sand.

15. In Nurpur Reach and in the vicinity of the James and Mary, inland steam-vessels shall navigate the Western Gut, and when obliged to use the Eastern Gut through insufficiency of water on the Western Gut, they shall navigate on the edge of Nurpur Sand and the Muckraputty Lumps.

16. From Hughli Point to Hospital Point, inland steam-vessels shall navigate the left bank of the river, and over the Hughli Sand.

17. From Hospital Point to the Northern entrance of the Rangafala Channel, inland steam-vessels shall navigate the left bank of the river.

18. When crossing from one Reach to another, inland steam-vessels shall not obstruct the passage of, or cause risk of collision with, any ocean going vessel which is using the crossing at the time, but shall slacken speed, stop or reverse, and if necessary, when going with the tide, turn head to tide until such time as the ocean going vessel has passed.

19. No inland vessel or flat shall anchor in any channel used by ocean going vessels, except in such a position as to offer no obstruction to such vessels.

20. When navigating the lighted channel between Garden Reach and Ulubaria at night, inland steam-vessels shall, when meeting or being over taken by ocean going vessels, conform to the same rules as those laid down for observance during the hours of day light; they shall offer no obstruction to the free passage of those vessels by crossing the channel, and shall, if necessary, ease, or stop.

21. When navigating the lighted channel between Garden Reach and Ulubaria at night, inland steam-vessels shall, on meeting or being overtaken by ocean going vessels, refrain from using their search-lights in such a manner as will interfere with the vision of those in charge of the navigation of such vessels.

22. Any person navigating or in charge of any inland steam-vessels in respect of which he commits a breach of any of these rules, shall be punishable with imprisonment for a term which may extend to six months, or with fine which may extend to five hundred rupees, or with both.

E. N. BLANDY,

Secy. to the Govt. of Bengal.

DEPARTMENT OF AGRICULTURE AND INDUSTRIES.

Forests.

Orders by the Conservator of Forests, Bengal.

Buxa-Chittagong. — No. 7517For. — 26th June 1936.—On return from leave Babu Shib Chandra Chatarji, Extra Assistant Conservator of Forests, is posted to the charge of the Southern Range, Silvicultural Division, with headquarters at Chittagong.

Buxa. — No. 7518For. — 26th June 1936. — Babu Samson Sitling, Extra Assistant Conservator of Forests, in charge of the Rajabhatkhawa Subdivision, is posted to the charge of the Kumargram Duar Subdivision with headquarters at Kumargram Duar.

The above transfers are ordered in the interest of public service.

Buxa.—No. 7813 For.—6th July 1936.—Babu Shib Chandra Chatarji, Extra Assistant Conservator of Forests in charge of the Kumargram Duar Subdivision, is allowed leave on average pay (without medical certificate) for one month, under rule 81 (*b*) (*ii*) of the Fundamental and Subsidiary Rules, with effect from the 1st June 1936.

Buxa.—No. 7814For.—6th July 1936.—Babu Samson Sitling, Extra Assistant Conservator of Forests, in charge of the Rajabhatkhawa Subdivision, will hold charge of the Kumargram Duar Subdivision in addition to his own duties with headquarters at Rajabhatkhawa during the absence, on leave, of Babu Shib Chandra Chatarji, Extra Assistant Conservator of Forests.

W. MEIKLEJOHN,
Conservator of Forests, Bengal.

REVENUE DEPARTMENT.

Land Revenue.

NOTIFICATIONS.

Pabna.—No. 9341L.R.—30th June 1936.—In exercise of the power conferred by sub-section (*3*) of section 158A of the Bengal Tenancy Act, 1885 (VIII of 1885), the Governor in Council is pleased to appoint for the purpose of that section, Babu Srimanta Das Gupta, Deputy Magistrate and Deputy Collector, Serajganj, Pabna, to perform the functions of a Certificate Officer under the Bengal Public Demands Recovery Act, 1913 (Bengal Act III of 1913), for the recovery of arrears of rents (including cesses) due to the estates of (1) Babu Akhil Chandra Pakrashi, and (2) Babu Suresh Chandra Pakrashi and others lying in the district of Pabna.

Bakarganj.—No. 9350L.R.—30th June 1936.—In exercise of the power conferred by sub-section (*3*) of section 158A of the Bengal Tenancy Act, 1885 (Act VIII of 1885), the Governor in Council is pleased to appoint, for the purpose of that section, Babu Bhupendra Krishna Sinha, Deputy Collector and Certificate Officer of Patuakhali, to perform the functions of a Certificate Officer under the Bengal Public Demands Recovery Act, 1913, for the recovery of arrears of rent (including cesses) due to the estates of Kumar Narendra Nath Mitra and Babu Prafulla Nath Tagore situated in the district of Bakarganj.

Rangpur.—No. 9575L.R.—3rd July 1936.—In exercise of the power conferred by section 103B, sub-section (*3*) of the Bengal Tenancy Act, 1885 (Act VIII of 1885), the Governor in Council is pleased to declare that a record-of-rights has been finally published under section 103A, sub-section (*2*) of the said Act, in respect of every village included in the police-station of Bhurungamari, in the district of Rangpur.

Pabna.—No. 9580L.R.—3rd July 1936.—In continuation of notification No. 4886L.R., dated the 19th April 1934, it is notified that the revenue survey of the lands falling in thanas Shahzadpur and Pabna previously excluded, situated on the banks and bed of the rivers flowing within or forming the administrative boundaries of the said district, directed to be made under notifications Nos. 10333L.R., dated the 6th November 1914, and 703T.R., dated the 20th May 1920, has been completed and approved by Government on this date.

Birbhum.—No. 9583L.R.—3rd July 1936.—Under the provisions of section 3 (*14*) of the Bengal Tenancy Act, 1885 (VIII of 1885), Babu Ram Ratan Ghosh, Settlement Kanungo, Birbhum, is authorized to discharge, in the district of Birbhum, the functions of a Revenue Officer, under Chapter X of that Act, so far as they relate to surveys and the preparation of a record-of rights.

Birbhum.—No. 9584L.R.—3rd July 1936.—In exercise of the powers conferred by section 3 of the Bengal Land Revenue Settlement Regulation, 1825 (IX of 1825), read with section 20 of the Bengal Land Revenue Settlement Regulation, 1822 (VII of 1822), the Governor in Council is pleased to vest Babu Ram Ratan Ghosh, Settlement Kanungo, who has, by notification No. 8582 C.P., dated the 17th June 1936, been vested by the board of Revenue with the powers of a Collector in the estate of Babu Kamala Ranjan Roy and also in the estate of Maheshpur Raj, in the district of Birbhum, for the purpose of the work of maintenance of the record-of-rights of those estates, with powers under section 19 of the said Bengal Land Revenue Settlement Regulation, 1822, within the local limits of those estates, to require and compel persons mentioned in the section to attend and produce accounts and other papers and to examine such persons under that section for the purpose of the said work of the maintenance of the record-of rights.

Jessore.—No. 9586L.R.—3rd July 1936.—In exercise of the power conferred by sub-section (*3*) of section 158A of the Bengal Tenancy Act, 1885 (Act VIII of 1885), the Governor in Council is pleased to appoint the Deputy Collectors Babu Anath Bandhu Roy and Babu Purna Chandra Acharji, Jessore, to perform the functions of Certificate Officers under the Bengal Public Demands Recovery Act, 1913 (Bengal Act III of 1913), for the purposes of the said section in respect of the recovery of arrears of rents (including cesses) due to the following estates in the district of Jessore :—

(1) Estate of Babu Narendra Kumar Mittra.

(2) Estate of Babu Sachi Prosanno Mukherjee and others of Gobardanga (Chhoto Taraf).

(3) Estate of Babu Hemendra Nath Roy Choudhury and others of Satkhira.

(4) Estate of Babu Sudhangsu Kumar Mittra and others.

(5) Estate of Kumar Arun Chandra Singha.

Midnapore.—No. 9609L.R.—3rd July 1936.—In exercise of the powers conferred by sub-section (*3*) of section 158A of the Bengal Tenancy Act, 1885 (VIII of 1885), the Governor in Council is pleased to appoint, for the purposes of that section, Babu Jyotish Chandra Aich, Sub-Deputy Collector, Tamluk, in the district of Midnapore, to perform the functions of a Certificate Officer under the Bengal Public Demands Recovery Act, 1913 (Bengal Act III of 1913), for the recovery of arrears of rents (including cesses) due to the estate of Babu Radha Gobinda Pal in the district of Midnapore.

Land Acquisition.

NOTIFICATIONS.

Burdwan.—No. 9325L.A.—30th June 1936.—Whereas it appears to the Governor in Council that land is likely to be required to be taken by Government at the public expense for a public purpose, viz., for road approach at mile 7 chainage 25 and 40 feet of distributary No. 11, branch canal, Damodar Canal Project, in the village of Eorachak, jurisdiction list No. 59, thana Bhatar, pargana Shahabad, district Burdwan, it is hereby notified that for the above purpose two pieces of land comprising parts of cadastral survey plot Nos. 915-917 and altogether measuring, more or less, 0·22 of an acre, are likely to be required within the aforesaid village of Eorachak.

This notification is made, under the provisions of section 4 of Act I of 1894, to all whom it may concern.

A plan of the land may be inspected in the office of the Special Land Acquisition Officer, Burdwan, as well as in that of the Executive Engineer, Damodar Canal Division, Burdwan.

In exercise of the powers conferred by the aforesaid section, the Governor in Council is pleased to authorise the officers for the time being engaged in the undertaking, with their servants and workmen, to enter upon and survey the land and do all other acts required or permitted by that section.

In exercise of the powers conferred by section 17(*4*) of the Land Acquisition Act, I of 1894, as amended by Act XXXVIII of 1923, the Governor in Council is pleased to direct that the provisions of section 5A of the Act shall not apply in this case.

Faridpur.—No. 9329L.A.—30th June 1936.—Whereas it appears to the Governor in Council that land is likely to be required to be taken by Government at the expense of the district board of Faridpur for a public purpose, viz., for constructing a portion of Kamarkhali Arpara road, in the village of Arpara-Gariadaha, jurisdiction list No. 97, thana Balijakandi, pargana Nasibsahi, district Faridpur, it is hereby notified that for the above purpose a piece of land comprising parts of cadastral plot Nos. 2031, 2035, 2036 and 2038, and measuring, more or less, 0·26 of an acre, is likely to be required within the aforesaid village of Arpara-Gariadaha.

This notification is made, under the provisions of section 4 of Act I of 1894, to all whom it may concern.

A plan of the land may be inspected in the office of the Subdivisional Officer of Goalundo at Rajbari.

In exercise of the powers conferred by the aforesaid section, the Governor in Council is pleased to authorise the officers for the time being engaged in the undertaking, with their servants and workmen, to enter upon and survey the land and do all other acts required or permitted by that section.

Any person interested in the above land, who has any objection to the acquisition thereof, may, within thirty days after the date on which public notice of the substance of this notification is given in the locality, file an objection in writing before the Collector of Faridpur.

24-Parganas.—No. 9332L.A.—30th June 1936.—The Governor in Council is pleased to cancel the notification No. 17921L.A., dated the 21st November 1935, under section 4 of the Land Acquisition Act, I of 1894, published at page 2316, Part I of the *Calcutta Gazette* of the 28th idem, in respect of the proposed acquisition of 0·0078 of an acre of land required by the Kanchrapara Municipality, for a road to connect station road with the Eastern Bengal Railway land in the village of Bijpore, jurisdiction list No. 3, thana Bijpore, pargana Havelishahar, district 24-Parganas.

Burdwan.—No. 9335L.A.—30th June 1936.—Whereas it appears to the Governor in Council that land is likely to be required to be taken by Government at the public expense for a public purpose, viz., for a road approach at mile 9 chainage 10 and 60 feet of distributary No. 11, branch canal, Damodar Canal Project, in the village of Sunur, jurisdiction list No. 101, thana Bhatar, pargana Shahabad, district Burdwan, it is hereby notified that for the above purpose two pieces of land comprising parts of cadastral survey plot

Nos. 317-319, 321 and 920 and altogether measuring, more or less, 0·17 of an acre, are likely to be required within the aforesaid village of Sunur.

This notification is made, under the provisions of section 4 of Act I of 1894, to all whom it may concern.

A plan of the land may be inspected in the office of the Special Land Acquisition Officer, Burdwan, as well as in that of the Executive Engineer, Damodar Canal Division, Burdwan.

In exercise of the powers conferred by the aforesaid section, the Governor in Council is pleased to authorise the officers for the time being engaged in the undertaking, with their servants and workmen, to enter upon and survey the land and do all other acts required or permitted by that section.

In exercise of the powers conferred by section 17(4) of the Land Acquisition Act, I of 1894, as amended by Act XXXVIII of 1923, the Governor in Council is pleased to direct that the provisions of the section 5A of the Act shall not apply in this case.

Burdwan.—No. 9338L.A.—30th June 1936.—Whereas it appears to the Governor in Council that land is likely to be required to be taken by Government at the public expense for a public purpose, viz., for a road approach for bridge at chainage 33 and 43 feet of distributary No. 8A-1, branch canal, Damodar Canal Project, in the villages of Gramdihi and Dhandalsa, jurisdiction list Nos. 17 and 24, respectively, in thana Bhatar, pargana Burdwan, district Burdwan, it is hereby notified that for the above purpose two pieces of land comprising parts of cadastral survey plots Nos. 2712, 2713, 2715 and 2720 in mauza Gramdihi and part of cadastral survey plot No. 1 in mauza Dhandalsa, and altogether measuring, more or less, 0·107 of an acre, are likely to be required within the aforesaid villages of Gramdihi and Dhandalsa.

This notification is made, under the provisions of section 4 of Act I of 1894, to all whom it may concern.

A plan of the land may be inspected in the office of the Special Land Acquisition Officer, Burdwan, as well as in that of the Executive Engineer, Damodar Canal Division, Burdwan.

In exercise of the powers conferred by the aforesaid section, the Governor in Council is pleased to authorise the officers for the time being engaged in the undertaking, with their servants and workmen, to enter upon and survey the land and do all other acts required or permitted by that section.

In exercise of the powers conferred by section 17 (4) of the Land Acquisition Act I of 1894, as amended by Act XXXVIII of 1923, the Governor in Council is pleased to direct that the provisions of section 5A of the Act shall not apply to this area which is entirely arable.

Noakhali.—No. 9344L.A.—30th June 1936.—Whereas it appears to the Governor in Council that land is likely to be required to be taken by Government at the public expense for a public purpose, viz., for a village playground required by the Joypur union board in the village of Joypur, jurisdiction list No. 171, thana Chhagalnaiya, pargana Dakshinshik, zilla Noakhali, it is hereby notified that for the above purpose a piece of land measuring, more or less, 1·70 acres, and comprising parts of cadastral survey plots Nos. 2588, 2604, 2600, 2603, 2602 and whole of 2605, is likely to be required within the aforesaid village of Joypur.

This notification is made, under the provisions of section 4 of Act I of 1894, to all whom it may concern.

A plan of the land may be inspected in the office of the Collector, Noakhali.

In exercise of the powers conferred by the aforesaid section, the Governor in Council is pleased to authorise the officers for the time being engaged in the undertaking, with their servants and workmen, to enter upon and survey the land and do all other acts required or permitted by that section.

In exercise of the powers conferred by section 17 (4) of the Land Acquisition Act, I of 1894, as amended by Act XXXVIII of 1923, the Governor in Council is pleased to direct that the provisions of section 5A of the Act shall not apply in this case.

Burdwan.—No. 9347L.A.—30th June 1936.—Whereas it appears to the Governor in Council that land is likely to be required to be taken by Government at the expense of the East Indian Railway for a public purpose, viz., for the extension and alterations to Dhemo main assisted siding in the village of Bara Dhemo, jurisdiction list No. 50, thana Asansol, pargana Shergarh, district Burdwan, it is hereby notified that for the above purpose a piece of land comprising parts of cadastral survey plots Nos. 1241-1243 and 1246, and measuring, more or less, 0·15 of an acre, is likely to be required within the aforesaid village of Bara Dhemo.

This notification is made, under the provisions of section 4 of Act I of 1884, to all whom it may concern.

A plan of the land may be inspected in the office of the Special Land Acquisition Officer, Burdwan as well as in that of the Divisional Superintendent, East Indian Railway, Asansol.

In exercise of the powers conferred by the aforesaid section, the Governor in Council is pleased to authorise the officers for the time being engaged in the undertaking with their servants and workmen, to enter upon and survey the land and do all other acts required or permitted by that section.

Any person interested in the above land, who who has any objection to the acquisition thereof, may, within thirty days after the date on which public notice of the substance of this notification is given in the locality, file an objection in writing before the Collector of Burdwan.

Jessore.—No. 9353L.A.—30th June 1936.—Babu Purna Chandra Acharji, Sadar Subdivisional Officer, district Jessore, is vested with the powers of a Collector under the Land Acquisition Act, I of 1894, in the Sadar, Bongaon and Jhenidah subdivisions of that district.

Bakarganj.—No. 9362L.A.—30th June 1936.—The Governor in Council is pleased to cancel notification No. 10678L.A., dated the 9th August 1935, under section 4 of the Land Acquisition Act, I of 1894, published at page 1577, Part I, of the *Calcutta Gazette* of the 15th idem, in respect of the proposed acquisition of 0·12 of an acre of land required by the union board of Gachhua for the construction of Srimati road in the village of Srimati, pargana Rastulpur, zilla Bakarganj.

Calcutta-24-Parganas.—No. 9479L.A.—2nd July 1936.—Rai Mahendra Nath Gupta Bahadur, Deputy Magistrate and Deputy Collector, employed as Second Land Acquisition Collector, Calcutta, is allowed leave on average pay (entirely on account of privilege leave at credit) from the 1st August 1936 or any subsequent date on which he may be relieved up to the 30th January 1937, inclusive, under rule 81 (*b*) (*ii*) of the Fundamental Rules and note 1 thereunder.

Burdwan.—No. 9577L.A.—3rd July 1936.—Whereas it appears to the Governor in Council that land is likely to be required to be taken by Government at the public expense for a public purpose, viz., for construction of the 7th, 8th, 9th and part of 10th mile up to chainage 36 and 80 feet of distributary No. 11, Branch Canal, Damodar Canal Project, in the villages of Bolenda, Balsidanga, Eorachak, Arra, Amarun, Nawada and Sunur, jurisdiction list Nos. 61, 60, 59, 58, 99, 100 and 101, respectively, in thana Bhatar, parganas Azmatsahi, Mazafarsahi and Shahabad, district Burdwan, it is hereby notified that for the above purpose two pieces of land comprising parts of cadastral survey plots Nos. 449, 461-463, 468, 492-496, 498, 539, 541, 542, 545-547, 1629 and 1630 in mauza Bolenda; parts of cadastral survey plots Nos. 5, 83, 94, 95, 97-99, 169, 170, 173, 174, 178, 179, 183-188, 191, 229, 230, 238-240, 242, 248, 249, 251, 253, 335 and 336 in mauza Balsidanga; parts of cadastral survey plots Nos. 456, 457, 461-463, 465, 467, 468, 472, 473, 482, 483, 485-487, 915-917 and 926 in mauza Eorachak; parts of cadastral survey plots Nos. 348, 353-359, 438, 443-445, 448-450, 737, 739, 740, 742, 743, 745, 765, 766, 768-771, 806, 2064, 2065, 2067-2069, 2071, 2074, 2084, 2085 and 2092-2095 in mauza Arra; parts of cadastral survey plots Nos. 1526, 1527, 1536-1540, 1543, 1558-1560, 1562, 2706, 2709, 2710, 2721, 2724-2727, 2736 and 2738 in mauza Amarun; parts of cadastral survey plots Nos. 14 and 330 in mauza Nawada; parts of cadastral survey plots Nos. 162, 164, 166, 175-178, 180, 195, 196, 318, 321, 324-332, 336-338, 490, 492, 494-497, 507, 520-523, 526, 565-567, 570 and 919 in mauza Sunur, and altogether measuring, more or less, 19·13 acres, are likely to be required within the aforesaid villages of Bolenda, Balsidanga, Eorachak, Arra, Amarun, Nawada and Sunur.

This notification is made, under the provisions of section 4 of Act I of 1894, to all whom it may concern.

A plan of the land may be inspected in the office of the Special Land Acquisition Officer, Burdwan, as well as in that of the Executive Engineer, Damodar Canal Division, Burdwan.

In exercise of the powers conferred by the aforesaid section, the Governor in Council is pleased to authorise the officers for the time being engaged in the undertaking, with their servants and workmen, to enter upon and survey the land and do all other acts required or permitted by that section.

Any person interested in so much of the above land as are not waste or arable, who has any objection to the acquisition thereof, may, within thirty days after the date on which public notice of the substance of this notification is given in the locality, file an objection in writing before the Collector of Burdwan.

In exercise of the powers conferred by section 17 (*1*) of the Land Acquisition Act, I of 1894, as amended by Act XXXVIII of 1923, the Governor in Council is pleased to direct that the provisions of section 5A of the Act shall not apply to the waste or arable portions of the land in this case.

Burdwan.—No. 9589L.A.—3rd July 1936.—Whereas it appears to the Governor in Council that land is likely to be required to be taken by Government at the public expense for a public purpose, viz., for approaches of the syphon at mile 19 chainage 39 and 80 feet of the Branch Canal, Damodar Canal Project, in the village of Eruar, jurisdiction list No. 38, thana Bhatar, pargana Mazafarsahi, district Burdwan, it is hereby notified that for the above purpose two pieces of land comprising parts of cadastral survey plot No. 16693 and altogether measuring, more or less, 0·08 of an acre, are likely to be required within the aforesaid village of Eruar.

This notification is made, under the provisions of section 4 of Act I of 1894, to all whom it may concern.

A plan of the land may be inspected in the office of the Special Land Acquisition Officer, Burdwan, as well as in that of the Executive Engineer, Damodar Canal Division, Burdwan.

In exercise of the powers conferred by the aforesaid section, the Governor in Council is pleased to authorise the officers for the time being engaged in the undertaking, with their servants and workmen, to enter upon and survey the land and do all other acts required or permitted by that section.

Any person interested in the above land, who has any objection to the acquisition thereof, may, within thirty days after the date on which public notice of the substance of this notification is given in the locality, file an objection in writing before the Collector of Burdwan.

Howrah.—No. 9592L.A.—3rd July 1936.—Maulvi Bazlur Rahman, Subdivisional Officer, Uluberia, district Howrah, is vested with the powers of a Collector under the Land Acquisition Act, I of 1894, in that subdivision.

Howrah.—No. 9600L.A.—3rd July 1936.—The Governor in Council is pleased to cancel so much of the notification No. 9497L.A., dated the 15th July 1935, under section 4 of the Land Acquisition Act, published at page 1373, Part I of the *Calcutta Gazette* of the 18th idem, as relates to 0·0067 of an acre of land as bounded below and which was required by the district board of Howrah for widening Dhulagore-Deulpur road at Joyrampur, in the village of Joyrampur, jurisdiction list No. 105, thana Panchla, formerly Jagatballavpur, pargana Balia, district Howrah :—

Boundaries.

North and East—By the lands of Majahar Mullick.

South and West—By Dhulagore-Deulpur road and the land to be acquired.

Calcutta.—No. 9603L.A.—3rd July 1936.—Whereas it appears to the Governor in Council that land is likely to be required to be taken by Government partly at the public expense and partly at the expense of the authorities of the Beltala Girls' High School for a public purpose, viz., for the extension of the Beltala Girls' High School in ward No. 22 of the Calcutta Municipality in the city of Calcutta, it is hereby notified that for the above purpose a piece of land comprising portions of premises Nos. 20, 20/1 and 21, Beltala Road, and measuring, more or less, 0·0981 of an acre, bounded on the—

North—By the remaining portions of premises Nos. 20, 20/1 and 21, Beltala Road,

East—By premises Nos. 18D and 17, Beltala Road,

South—By premises Nos. 20/1, and 21, Shyamananda Road,

West—By premises No. 20, Shyamananda Road and the remaining portion of premises No. 21, Beltala Road,

is likely to be required within the aforesaid ward No. 22 of the Calcutta Municipality in the city of Calcutta.

This notification is made, under the provisions of section 4 of Act I of 1894, to all whom it may concern.

A plan of the land may be inspected in the office of the Second Land Acquisition Collector at No. 5, Bankshall Street, Calcutta.

In exercise of the powers conferred by the aforesaid section, the Governor in Council is pleased to authorise the officers for the time being engaged in the undertaking, with their servants and workmen, to enter upon and survey the land and do all other acts required or permitted by that section.

Any person interested in the above land, who has any objection to the acquisition thereof, may, within thirty days after the date on which public notice of the substance of this notification is given in the locality, file an objection in writing before the Second Land Acquisition Collector at No. 5, Bankshall Street, Calcutta.

Hooghly.—No. 9606L.A. — 3rd July 1936.—Whereas it appears to the Governor in Council that land is likely to be required to be taken by Government at the expense of the district board of Hooghly for a public purpose, viz., for extending Chandanpur-Jinpur road to connect Haripal-Dhaniakhaly road in the villages of Alipur, Nayanagore and Jinpur, jurisdiction list Nos. 7, 8 and 84, respectively, thana Haripal, parganas Baligori and Chouthaha, district Hooghly, it is hereby notified that for the above purpose a piece of land comprising portions of cadastral plots Nos. 2393, 2384, 2392, 2385, 2388, 2386, 2387, 2516, 2512, 2616, 2511, 2520, 2510 and 2521 of village Alipur, 340, 353, 487, 565, 646, 564, 562, 567, 549, 644, 537, 539, 538, 540, 529, 541, 657, 650, 660, 669, 663, 684, 685, 683, 682, 681 676, 678, 674, 675, 739, 741, 742, 744 of village Nayanagore and 490, 304, 410, 489, 491, 492 of village Jinpur, and measuring, more or less, 5·11 acres, is likely to be required within the aforesaid villages of Alipur, Nayanagore and Jinpur.

This notification is made, under the provisions of section 4 of Act I of 1894, to all whom it may concern.

A plan of the land may be inspected in the office of the Land Acquisition Officer, Serampore.

In exercise of the powers conferred by the aforesaid section, the Governor in Council is pleased to authorise the officers for the time being engaged in the undertaking, with their servants and workmen, to enter upon and survey the land and do all other acts required or permitted by that section.

Any person interested in the above land, who has any objection to the acquisition thereof, may, within thirty days after the date on which public notice of the substance of this notification is given in the locality, file an objection in writing before the Collector of Hooghly.

DECLARATIONS.

24-Parganas.—No. 9594L.A. — 3rd July 1936.—Whereas it appears to the Governor in Council that land is required to be taken by Government at the expense of the district board of 24-Parganas for a public purpose, viz., for the Bakultola local board road in the village of Iswaripur, jurisdiction list No. 25, thana Falta, pargana Penchakuli, district 24-Parganas, it is hereby declared that for the above purpose a piece of land comprising portion of cadastral plots Nos. 585, 584, and 2035 and measuring, more or less, 0·2087 of an acre, is required within the aforesaid village of Iswaripur.

This declaration is made, under the provisions of section 6 of Act I of 1894, to all whom it may concern.

A plan of the land may be inspected in the office of the Chairman, district board, as well as in that of the Land Acquisition Deputy Collector, Alipore, 24-Parganas.

Howrah. — No. 9597L.A. — 3rd July 1936.— Whereas it appears to the Governor in Council that land is required to be taken by Government at the expense of the district board of Howrah for a public purpose, viz., for widening the Dhulagore-Doulpur road in the village of Joyrampur, pargana Balia, zilla Howrah, it is hereby declared that for the above purpose a piece of land measuring, more or less, 0·001 of an acre, bounded on the—

North and East—By the land of Sk. Majahar Mullik,
South and West—By Dhulaghore-Doulpur road,

is required within the aforesaid village of Joyrampur.

This declaration is made, under the provisions of section 6 of Act I of 1894, to all whom it may concern.

A plan of the land may be inspected in the office of the Collector of Howrah.

Miscellaneous.

DECLARATIONS.

Burdwan.—No. 9273Misc.—27th June 1936.— Under the provisions of rule 74 of the Bengal Famine Code, 1913, it is hereby declared that a state of scarcity provails in the areas specified below in the Sadar subdivision of the district of Burdwan :—

Bhatar police-station.

Nota union.

Raina police-station.

Phahalanpur union.

Ausgram police-station.

Gushkara union.
Amarpur union.
Kota union.

Burdwan.—No. 9631Misc.—4th July 1936.— Under the provisions of rule 74 of the Bengal Famine Code, 1913, it is hereby declared that a state of scarcity prevails in the area commonly known as Jungle Mahal comprising 55 villages as specified in the list annexed hereto within the Ausgram police-station in the Sadar subdivision of the district of Burdwan.

List of Jungle Mahal mauzas.

Jurisdiction list No.	Name of mauza.
2	Harishpur.
3	Akullia.
4	Harinathpur.
5	Nawpara.
9	Genrai.
10	Gohalara.
11	Jalikandar.
12	Hedogariya.
13	Salko.
17	Srichandrapur.
18	Majuria.
19	Harinarayanpur.
20	Chotta Ramchandrapur.
21	Dhantor.
24	Chak Piariganj.
25	Kakra.
26	Paschim Chandipur.
27	Debsala.
28	Arjuri.
29	Rangakhila.
30	Parisa.
31	Chak Tilang.
32	Tilang.
33	Mokota.
34	Bhatkunda.
35	Balarambati.
36	Ramharipur.
37	Bara Chatra.
38	Ramchandrapur.
39	Purbatati.
45	Kural.
59	Bahamanpur.
60	Radhamchonpur.
61	Pratappur.
62	Lachminarayanpur.
63	Babuisol.
64	Kuldiha.
65	Premganja.
66	Lachminarayanpur Chak.
67	Baro Doba.
68	Jinjra.
69	Paduma.
70	Bilaspur.
71	Gobindapur.
85	Ramnagar.
86	Radhaballabhpur.
87	Panchamahali.
89	Dombandi.
100	Chadipur.
103	Telata.
104	Jadabganj.
105	Kumarganj.
106	Goalpota.
107	Madanmohonpur.
108	Chak Radhamadhabpur.

Excise.

NOTIFICATIONS.

Minister-in-charge: The Hon'ble Sir Bijoy Prasad Singh Roy, Kt.

Hooghly.—No. 106T.Ex. — 23rd May 1936. — Mr. H. V. Boyer, Inspector of Excise and Salt in charge, Hooghly, is appointed to be a temporary Superintendent of Excise and Salt, with effect from the 16th May 1936.

Dinajpur.— No. 638Ex. — 29th June 1936. — Maulvi Kazi Barkat Ali, Inspector of Excise and Salt in charge, Dinajpur, is allowed leave on average pay, under rule 81 (*b*) (*ii*) of the Fundamental Rules, for two months, with effect from the 28th April 1936.

This cancels notification No. 473Ex., dated the 14th April 1936.

J. B. KINDERSLEY,

Secy. to the Govt. of Bengal (offg.).

Orders by the Commissioner of Excise and Salt, Bengal.

No. 22Exc.—6th July 1936. — Babu Kiran Chandra Bose, Inspector in charge of Excise and Salt, Naogaon, Rajshahi, is, on relief by Babu Mukunda Prasad Sen, temporary Superintendent of Excise and Salt, posted to Sugar (Excise) work in the Rajshahi Division with headquarters at Naogaon in the district of Rajshahi temporarily, in the public interest.

A. S. LARKIN,

Commr. of Excise and Salt, Bengal (offg.)

BOARD OF REVENUE, BENGAL.

NOTIFICATIONS.

Faridpur.—No. 9016C.P. — 27th June 1936.— In exercise of the powers conferred by clause (*2*) of section 8 of the Bengal Land Revenue (Assistant Collectors) Regulation, 1821 (IV of 1821), the Board of Revenue authorises Khan Sahib Maulvi Md. Karim Bakash, Settlement Kanungo, who has been placed on duty in connection with the maintenance, for the purposes of section 158A of the Bengal Tenancy Act, 1885, of the record-of-rights of the estates of Raja Janaki Nath Roy and Lala Brajendra Kumar Bose in the district of Faridpur, to exercise and perform within the local limits of the said estates any of the powers and duties vested in the Collectors of Land Revenue under any enactment in force therein for the purpose of the said work of maintenance of the record-of-rights.

Birbhum.—No. 9142C P.—2nd July 1936.— In exercise of powers conferred by clause (*2*) of section 8 of the Bengal Land Revenue (Assistant Collectors) Regulation, 1821 (IV of 1821), the Board of Revenue authorises Babu Ram Ratan Ghosh, Settlement Kanungo, who has been placed on duty in connection with the maintenance, for the purposes of section 158A of the Bengal Tenancy Act, 1885, of the record-of-rights of the estate of Raja Bhupendra Narayan Sinha Bahadur of Nashipur in the district of Birbhum to exercise and perform within the local limits of the said estate any of the powers and duties vested in the Collectors of Land Revenue under any enactment in force therein for the purpose of the said work of maintenance of the record-of-rights.

S. BANERJEE,

Secy. to the Board of Revenue, Bengal.

HIGH COURT NOTICES.

Civil.

The 27th June 1936.

No. 14344A.—Maulvi Saiyid Tassaduq Hossain, munsif of Comilla, in the district of Tippera, is vested with the powers of a Judge of a Court of Small Causes for the trial of suits cognizable by such a Court up to the value of Rs. 300 within the local limits of the Comilla munsifi.

The 29th June 1936.

No. 14404A.—In exercise of the powers delegated to the High Court by the notification of the Government of Bengal, No. 64J.D., dated the 30th April 1915, Babu Dhirendra Nath Bagchi, munsif, under orders of transfer to Katwa, in the district of Burdwan, is vested under article 8 of the Second Schedule of the Provincial Small Cause Courts Act, 1887 (IX of 1887), with powers to try, under the Small Cause Court procedure, suits up to the value of Rs. 300 for the recovery of rents of homestead lands arising within the municipal area within his jurisdiction.

No. 14407A.—Babu Dhirendra Nath Bagchi, munsif, under orders of transfer to Katwa, in the district of Burdwan, is vested with the powers of a Judge of a Court of Small Causes for the trial of suits cognizable by such a Court up to the value of Rs. 300 within the local limits of the Katwa munsifi.

No. 14483A.—Babu Sailendra Nath Mitra, munsif of Kushtia, in the district of Nadia, is vested with the powers of a Judge of a Court of Small Causes for the trial of suits cognizable by such a Court up to the value of Rs. 300 within the local limits of the Kushtia munsifi.

No. 14486A. — Babu Sailendra Nath Mitra, munsif of Kushtia, in the district of Nadia, is vested under section 19, sub-section (2) of the Bengal, Agra and Assam Civil Courts Act, 1887 (XII of 1887), as amended by the Decentralisation Act, 1914 (IV of 1914), with powers to try, under the ordinary procedure, original suits up to the value of Rs. 2,000 arising within the local limits of the Kushtia munsifi.

No. 14489A.—In exercise of the powers delegated to the High Court by the notification of the Government of Bengal, No. 64 J D., dated the 30th April 1915, Babu Sailendra Nath Mitra, munsif of Kushtia, in the district of Nadia, is vested under article 8 of the Second Schedule of the Provincial Small Cause Courts Act, 1887 (IX of 1887), with powers to try, under the Small Cause Court procedure, suits up to the value of Rs. 300 for the recovery of rents of homestead lands arising within the municipal area within his jurisdiction.

The 6th July 1936.

No. 14862A.—Maulvi Velayet Hossain Mollah, munsif of Arambagh, in the district of Hooghly, is vested with the powers of a Judge of a Court of Small Causes for the trial of suits cognizable by such a Court up to the value of Rs. 100 within the local limits of the Arambagh munsifi.

By order of the High Court,

E. S. SIMPSON, *Registrar.*

ORDERS BY COMMISSIONERS OF DIVISIONS.

Burdwan Division—Chinsura.

No. 4086J.G.—27th June 1936.—Maulvi Sultan Ahmad, Sub-Deputy Collector, Katwa, in the district of Burdwan, employed temporarily on famine relief work, is appointed temporarily to be Circle Officer of Katwa, during the absence, on leave, of Babu Hira Lal Roy, or until further orders.

No. 1028M.—30th June 1936. It is hereby notified for general information under section 50 of the Bengal Municipal Act, 1932 (XV of 1932), that the Commissioners of the Bankura Municipality in the district of Bankura, by a resolution passed at a special meeting held on the 2nd June 1936, duly elected Babu Hari Sadhan Dutt, B.L., to be their Chairman, *vice* Rev. A. E. Brown, O.I.E., resigned.

No. 4127J.G. — 30th June 1936. — Babu Dhirendra Nath Banerjee, Sub-Deputy Collector and Circle Officer, Pingla, district Midnapore, is granted under rule 81 (*b*) (*ii*) of the Fundamental Rules, leave on average pay for three weeks, with effect from the 17th June 1936.

No. 4205J.G.—3rd July 1936.—Maulvi Saiyed Abu Nasir Muhammad Ali Akbar, Sub-Deputy Collector, posted to this division as per Government notification No. 5341A. of the 30th June 1936, is posted temporarily to the headquarters of the Birbhum district for employment on general duty. The posting is made in the public interest.

No. 4211J.G.—3rd July 1936.—Babu Pranabendu Prasad Pal, Sub-Deputy Collector, posted to this division as per Government notification No. 5341A. of the 30th June 1936, is appointed temporarily as Circle Officer of Amta in the district of Howrah.

No. 1779L.S.-G.—4th July 1936.—It is hereby notified for general information that, under Rule 20 (*b*) of the rules for the management of charitable hospitals and dispensaries in Bengal, the following gentlemen have been appointed to be members of the committee for the management of the charitable dispensary at Nalrakonda in the district of Birbhum, in addition to the members whose names were notified with this office notification No. 2024L.S.-G. of the 21st October 1935 :—

Babu Kaliprasonna Banerjee.

Babu Nemai Charan Mukherjee.

L. B. BURROWS, *Commissioner.*

Bankura, the 2nd July 1936.

Erratum.—In notification No. 250J., dated 15th January 1936, publishing names of members of Panchmura union board, among others, who were elected under sub-section (2) of section (6) of the Bengal Village Self-Government Act (Bengal Act V of 1919), the following corrections should be made as a result of orders passed under section 17 (B) of the Act :—

For

" Ward No. 2.

Babu Dibakar Nandy.

Ward No. 4.

Babu Shib Sankar Roy.
Babu Sripati Charan Naik."

Read

" Ward No. 3.

Babu Shib Sankar Roy.

Ward No. 4.

Babu Dibakar Nandy.
Babu Dwarika Nath Mandal."

J. M. CHATARJI, *District Magistrate.*

Chittagong Division—Chittagong.

Noakhali, the 26th June 1936.

No. 6215J.—It is notified for general information that, under sub-section (*2*) of section 6 of the Bengal Village Self-Government Act, 1919 (Act V of 1919), the following gentlemen have been duly elected to be members of the union board No. 15 Kushakhali within police-station Lakshmipur in the Sadar subdivision of the Noakhali district :—

Ward No. I.

Md. Habibulla Mia.
Babu Jogesh Chandra Ghose.

Ward No. II.

Md. Monohar Mia.
Md. Sujayet Ulla Mia.

Ward No. III.

Abdul Halim Mia.
Abdul Waheb Mia.

No. 6215J.—It is notified for general information that, under sub-section (*3*) of section 6 of the Bengal Village Self-Government Act (Act V of 1919), the following gentlemen have been appointed by the District Magistrate of Noakhali to be members of the union board No. 15 Kushakhali within police-station Lakshmipur in the Sadar subdivision of the Noakhali district :—

Babu Rasharaj Paul.
Md. Golam Kuddus Mia.
Maulvi Nazir Ahmed.

R. A. DUTCH, *District Magistrate.*

Comilla, the 2nd July 1936.

No. 6232M.—It is hereby notified for general information that, under section 13 of the Bengal Village Self-Government Act, 1919, read with section 6 (*2*) and rule 35 of the rules for the election and appointment of members of union boards, Babu Sarada Kishore Kar has been duly elected as a member of the Paharpur union board No. XIV of the Brahmanbaria police-station in the Brahmanbaria subdivision of the Tippera district, *vice* Babu Atul Chandra Raha, deceased.

No. 6234M. –It is hereby notified for general information that, under section 13 of the Bengal Village Self-Government Act, 1919, read with section 6 (*2*) and rule 35 of the rules for the election and appointment of members of union boards, Maulvi Nural Haque Bhuya of Tulaisimul has been duly elected as a member of the Maniandha union board No. V of the Kasba police-station in the Brahmanbaria subdivision of the Tippera district, *vice* M. Seraj Ali Mridha, deceased.

J. P. RAY, *Additional District Magistrate.*

Dacca Division—Dacca.

No. 3329J.—30th June 1936.—It is hereby notified for general information that, under rule 63(*2*) of the Bengal Jail Code, 1919, Nawabzada K. Nasarullah is re-appointed to be a non-official visitor of the Dacca Central Jail for a further period of two years, with effect from the 19th May 1936.

No. 3340J.—30th June 1936.—It is hereby notified for general information that at the general election held from 8th to 15th January and supplementary elections held on the 4th, 26th and 28th May 1936, the following gentlemen were duly elected to be members of the undermentioned local boards in the district of Mymensingh for the several police-stations mentioned above their names :—

Sadar local board.

Kotwali police-station.

Maulvi Abdul Majid, M.A., B.L. (Ordinary seat).
Babu Durga Prosad Bal (Special seat).

Gaffargaon police-station.

Maulvi Ghyasuddin Pathan, B.L. (Ordinary seat).
Maulvi Hafezuddin Ahmed (Ordinary seat).

Bhaluka police-station.

Maulvi Abedulla Sarker (Ordinary seat).

Trisal police-station.

Maulvi Waizuddin (Ordinary seat).

Muktagacha police-station.

Maulvi Md. Kalam Ali (Ordinary seat).

Fulbaria police-station.

Maulvi Abdul Karim Khan (Ordinary seat).

Iswarganj police-station.

Maulvi Abbas Ali Ahmed (Ordinary seat).
Rai Umesh Chandra Chakladar Bahadur (Special seat).

Nandail police-station.

Khan Sahib Nurul Amin (Ordinary seat).

Phulpur police-station.

Maulvi Samiruddin, B.L. (Ordinary seat).
Babu Satish Chandra Ghosh (Special seat).

Haluaghat police-station.

Babu Hiran Chandra Chakrabarty (Ordinary seat).

Jamalpur local board.

Jamalpur police-station.

Maulvi Giasuddin Ahmed (Ordinary seat).
Babu Susil Kumar Bose (Special seat).

Madarganj police-station.

Mir A. K. M. Bafatuddin Taluqdar (Ordinary seat).

Nalitabari police-station.

Maulvi Mohiuddin Ahmed (Ordinary seat).
Babu Dharani Kanta Barman (Special seat).

Nakhla police-station.

Maulvi Sarafatuddin Ahmed (Ordinary seat).

Dewanganj police-station.

Maulvi Naimuddin Ahmed (Ordinary seat).

Sherpur police-station.

Maulvi Khosh Mammud Choudhury (Ordinary seat).
Maulvi Majid Ali Sarker (Ordinary seat).

Sribardi police-station.

Maulvi Niamatulla Taluqdar (Ordinary seat).

Melandaha police-station.

Maulvi Romijuddin Mir (Ordinary seat).

Islampur police-station.

Maulvi Mosaraff Hossain (Ordinary seat).

Sarisabari police-station.

Maulvi Ahmed Ali Kazi (Ordinary seat).

Tangail local board.

Tangail police-station.

Maulvi Masud Ali Khan Pani (Ordinary seat).
Babu Monomohan Neogi, B.L. (Special seat).

Basail police-station.

Maulvi Jamiruddin Ahmed, B.L. (Ordinary seat).

Madhupur police-station.

Syed Hasan Ali Choudhury (Ordinary seat).

Kalihati police-station.

Maulvi Ali Azgar Choudhury (Ordinary seat).
Babu Jnanendra Nath Datta, B.L. (Special seat).

Ghatail police-station.

Maulvi Amiruddin Choudhury, B.L. (Ordinary seat).
Maulvi Abdul Hali Mia (Ordinary seat).

Nagarpur police-station.

Maulvi Abdul Halim (Ordinary seat).
Babu Jatindra Mohan Singha (Special seat).

Mirzapur police-station.

Maulvi Khandaker Azizur Rahman, B.L. (Ordinary seat).
Babu Girindra Kumar Roy Choudhury (Special seat).

Gopalpur police-station.

Maulvi Alauddin Taluqdar, Muktear (Ordinary seat).
Maulvi Dulauddin Khan (Ordinary seat).

Netrakona local board.

Netrakona and Barhatta police-stations.

Maulvi Sarafuddin Ahmed Majumdar (Ordinary seat).
Babu Jnanendra Chandra Choudhury (Special seat).

Madan and Khaliajuri police-stations.

Maulvi Jaber Bakta Dowan (Ordinary seat).
Babu Jatindra Mohan Khan Sarker (Special seat).

Durgapur and Kalmakanda police-stations.

Maulvi Abul Hossain Ahmed (Ordinary seat).
Babu Lakshan Chandra Das (Special seat).

Mohanganj police-station.

Maulvi Abdus Samad Taluqdar (Ordinary seat).

Atpara police-station.

Maulvi Abdul Gani Beg (Ordinary seat).

Purbadhala police-station.

Maulvi Moslemuddin Ahmed (Ordinary seat).

Kendua police-station.

Maulvi Tayob Ali Khandaker (Ordinary seat).

Kishoreganj local board.

Kishoreganj police-station.

Maulvi Abdul Gani Khan (Ordinary seat).
Babu Bepin Chandra Roy (Special seat).

Tarail and Itna police-stations.

Maulvi Azizul Haque Khan Milki (Ordinary seat).

Babu Paresh Chandra Nandy (Special seat).

Bajitpur and Nikli police-stations.

Maulvi Hamiduddin Ahmed, Khan Sahib (Ordinary seat).

Babu Rukmini Raman Banik (Special seat).

Karimganj police-station.

Maulvi Abu Ahmed (Ordinary seat).

Hussainpur police-station.

Maulvi Abdul Hakim Khan (Ordinary seat).

Katiadi police-station.

Maulvi Md. Nuruzzaman Mosh (Ordinary seat).

Pakundia police-station.

Maulvi Aftabuddin Ahmed (Ordinary seat).

Astagram police-station.

Maulvi Sayed Misbahuddin Hossain (Ordinary seat).

Bhairab and Kuliarchar police-stations.

Maulvi A. F. M. Nurullah (Ordinary seat).

No. 3347J.—2nd July 1936.—It is hereby notified for general information that, under rule 20(*b*) read with rule 23 of the manual of rules for the management of the hospitals and dispensaries under the supervision of the Government of Bengal, published with Government notification No. 138T. Medl., dated 7th June 1915, the following gentlemen are appointed to be members of the committee for the management of the charitable dispensary at Sribardi, in the district of Mymensingh, in place of those shown against their names :—

Maulvi Tafiruddin Ahmed in place of Maulvi Abdul Awal, removed.

Maulvi Fazlul Hoque in place of Maulvi Azizur Rahaman, removed.

Maulvi Husain Ali Sarker in place of Maulvi Mafizuddin Ahmad, removed.

No. 3386J.—4th July 1936.—Maulvi Muhammad Husain Ali, No. II, Sub-Deputy Collector, who has been posted to the Dacca Division in Government notification No. 5331A., dated the 30th June 1936, is appointed to be Circle Officer, West Circle, Patuakhali, in the district of Bakarganj.

L. R. FAWCUS, *Commissioner (offg.)*.

Faridpur, the 27th June 1936.

No. 5359J.—It is hereby notified for general information that, under section 13 of the Bengal Village Self-Government Act (Act V of 1919), Babu Mahendra Nath Podder has been appointed to be a member of the Gobra union board in police-station Gopalganj in the Gopalganj subdivision of the Faridpur district, *vice* Babu Tarini Charan Podder, deceased.

No. 5360J.—It is hereby notified for general information that, under section 13 of the Bengal Village Self-Government Act, 1919 (Bengal Act V of 1919), Babu Purna Chandra Biswas has been elected to be a member of ward No. I of the Ulpur union board in police-station Gopalganj in the Gopalganj subdivision of the Faridpur district, *vice* Babu Radhanath Roy, deceased.

K. A. L. HILL, *District Magistrate.*

Orders by the Deputy Inspector-General of Police, Dacca Range.

Dacca.—No. 2554.—25th June 1936.—Khan Sahib Abdul Azim Khan, Inspector, Dacca, is granted 3 days' leave on average pay in extension of the leave already granted to him. Maulvi Abdul Latif Khan, officiating Inspector, Dacca, is allowed to continue to act as such in the vacancy.

With the approval of the Inspector-General of Police, Subadar Pramatha Krishna Santra, Armed Inspector, Faridpur, is posted to a circle as a temporary measure for 1 year with effect from 1st July 1936, in the vacancy that will be caused by the retirement of Babu Surendra Mohan Sarkar, Inspector, of that district.

Babu Ram Nath Pande, officiating Armed Inspector, will continue to act as Armed Inspector, Faridpur, *vice* Subadar Pramatha Krishna Santra, posted to a circle.

Babu Prakash Chandra Basu, Inspector, Faridpur, is granted 1 month's commuted furlough on medical certificate, in extension of the leave already granted to him. Maulvi Ainuddin Ahmad, officiating Inspector, Faridpur, will continue to act as such in the vacancy.

A. D. GORDON,

Deputy Inspector-General of Police.

Presidency Division—Calcutta.

No. 1553R.G.—26th June 1936.— Maulvi Muhammad Shamsul Huda, Sub-Deputy Collector and Circle Officer, Jessore, is transferred to Khulna as Circle Officer.

No. 1559R.G.—26th June 1936.— Maulvi Abdur Rahim, No. I, Sub-Deputy Collector, Murshidabad, is transferred to Keshabpur Circle in Jessore, Sadar, as Circle Officer.

A. J. DASH, *Commissioner.*

Orders by the Deputy Inspector-General of Police, Presidency Range.

Calcutta.—No. 3621.—27th June 1936.—Babu Raj Mohan Chakrabatti, Inspector, E. B. Railway, Sealdah, is granted 4 weeks' leave on average pay, on medical certificate, in extension of the leave already granted to him.

Babu Amrita Lal Guha, officiating Inspector, will continue to act as such in the vacancy.

L. H. BURTON,

Deputy Inspector-General of Police.

Rajshahi Division—Jalpaiguri.

No. 2636J.—25th June 1936.—Babu Gourendra Krishna Deb, Sub-Deputy Collector, Pabna, is appointed Circle Officer, Pabna Sadar, temporarily.

No. 2715J.—30th June 1936.—Babu Nagendra Nath Majumdar, Sub-Deputy Collector, Pabna, is allowed leave on average pay for twenty-seven days in extension of the leave already granted to him, under rule 81 (*b*) (*ii*) of the Fundamental Rules, in this office notification No. 2479J., dated the 12th June 1936.

F. W. ROBERTSON, *Commissioner.*

Pabna, the 30th June 1936.

No. 4118J.—It is notified for general information that, under section 13 of the Bengal Village Self-Government Act, 1919 (Bengal Act V of 1919), Munshi Muhammed Sadeque Ulla Khan of Chhaikhola has been duly elected to be a member of Chhaikhola union board under Chatmohar police-station in the Sadar subdivision of the Pabna district, *vice* Maulvi Hafizar Rahman Khan, resigned.

No. 4119J.—It is notified for general information that, under section 13 of the Bengal Village Self-Government Act, 1919 (Bengal Act V of 1919), Munshi Muhammed Meser Uddin Sarkar of Chhaikhola has been duly appointed to be a member of Chhaikhola union board under Chatmohar police-station in the Sadar subdivision of the Pabna district, *vice* Maulvi Mahiruddin Sarkar, deceased.

L. C. GUHA, *District Magistrate.*

Bogra, the 1st July 1936.

No. 3157J.—It is hereby notified for general information that, under sub-section (2) of section 6 of the Bengal Village Self-Government Act, 1919 (Bengal Act V of 1919), the following gentlemen have been duly elected to be members of the undermentioned union boards in the district of Bogra :—

Panchbibi police-station.

Kusumba union No. VII.

Ward No. I.

Munshi Emarat Ali Mondal.
Babu Kana Kauri Pradhan.

Ward No. II.

Munshi Jiaruddin Mondal.
Munshi Meseruddin Mondal.

Ward No. III.

Munshi Kuranu Mia Chaudhury.
Munshi Afazuddin Mia Chaudhury.

Sherpur police-station.

Mirjapur union No. V.

Ward No. I.

Munshi Md. Azimuddin Sarker.
Munshi Kazemuddin Shaikh.

Ward No. II.

Munshi Kashimuddin Sarker.
Munshi Md. Kabiruddin Pramanik.

Ward No. III.

Munshi Md. Umar Ali Sheikh.
Munshi Kashimuddin Akanda.

Shibganj police-station.

Kichak union No. II.

Ward No. I.

M. Insar Ali Fakir.
M. Asgar Ali Sarker.

Ward No. II.

Munshi Abdul Aziz Chaudhury.
Munshi Anar Ali Fakir.

Ward No. III.

Munshi Kasem Ali Fakir.
Munshi Sadek Mamud Mondal.

Atmool union No. III.

Ward No. I.

Munshi Biraj Uddin Pramanik.
Munshi Abdul Karim Talukdar.

Ward No. II.

Munshi Badiazzaman Mir.
Munshi Abdur Rahaman Khan.

Ward No. III.

Munshi Kazemuddin Ahamed.
Munshi Abdur Rahim Talukdar.

Pirob union No. IV.

Ward No. I.

Munshi Ramjan Ali Pradhan.
Munshi Hossain Baksh Pramanik.

Ward No. II.

Munshi Haji Jabu Mondal.
Munshi Haji Jonab Ali Fakir.

Ward No. III.

Munshi Boytulla Talukdar.
Munshi Ful Mohammad Khan.

No. 3158J.—It is hereby notified for general information that, under sub-section (*3*) of section 6 of the Bengal Village Self-Government Act, 1919 (Bengal Act V of 1919), the following gentlemen have been duly appointed to be members of the undermentioned union boards in the district of Bogra :—

Panchbibi police-station.

Kusumba union No. VII.

Babu Pulin Behari Sardar.
Babu Jagabandhu Sarker.
Munshi Fakir Mamud Mondal.

Sherpur police-station.

Mirjapur union No. V.

Babu Nalin Chandra Sarker.
Dr. Mohini Mohan Sanyal.
Munshi Anu Mondal.

Shibganj police-station.

Kichak union No. II.

Maulvi Bazlar Rahaman Chaudhury.
Babu Barada Kanta Saha.
Dr. Satish Chandra Sarker.

Atmool union No. III.

Munshi Ibrahim Akanda.
Babu Lal Behari Mondal.
Munshi Mobarak Ali.

Pirob union No. IV.

Munshi Asgar Ali.
Babu Lalit Chandra Pal.
Babu Raj Kumar Sil.

T. I. M. NURANNABI CHAUDHURI,
District Magistrate.

Rajshahi, the 4th July 1936.

No. 5109J.—It is notified for general information that Maulvi Moslem Ali Molla, son of late Maulvi Amanulla Molla, of Jatamrul, police-station Atrai, post office Atrai, in the Naogaon subdivision of the district of Rajshahi, is hereby declared to be duly elected as a member from Rajshahi South Muhammadan constituency to the Bengal Legislative Council, *vice* Khan Bahadur Maulvi Emaduddin Ahmed, deceased.

K. K. HAJARA, *Returning Officer, Rajshahi South Muhammadan constituency of the Bengal Legislative Council.*

Orders by the Deputy Inspector-General of Police, Rajshahi Range.

Jalpaiguri.—No. 4829.—3rd July 1936.—Babu Srish Chandra Chaudhuri, Inspector, Bogra, is granted 1 month's leave on half average pay, on medical certificate, in extension of the leave already granted to him.

E. B. JONES,
Deputy Inspector-General of Police.

Registered No. C207

The Calcutta Gazette

THURSDAY, JULY 9, 1936.

PART IA

Orders and Notifications by the Government of India republished for general information.

HOME DEPARTMENT.

NOTIFICATIONS.

JUDICIAL.

Simla, the 25th June 1936.

No. F. 25/6/36.—The Honourable Mr. Justice Torick Ameer Ali, Barrister at-Law, a Judge of the High Court of Judicature at Fort William in Bengal, is granted leave on full allowance for the 9th November 1936.

J. A. THORNE,
Joint Secy. to the Govt. of India.

POLICE.

The 24th June 1936.

No. F. 123/III/34. — *Corrigendum.* — In the Home Department Notification No. F. 123/III/34-Police, dated the 11th June 1936, published on pages 788-91 of the *Gazette of India* (Part I), dated the 13th June 1936—(*i*) in the description of the 'Breeches' to be worn with Review Order, for the word 'buskin' read 'buck-skin'; (*ii*) in the description of the peak of the cap to be worn by Deputy Inspectors-General and Superintendents in receipt of basic pay of Rs. 950 a month and over, etc., for the word 'deak' read 'peak'.

M. G. HALLETT,
Secy. to the Govt. of India.

FOREIGN AND POLITICAL DEPARTMENT.

NOTIFICATION.

Simla, the 25th June 1936.

No. 396-G.—With reference to notification No. 330-G., dated the 4th June 1936, the provisional recognition of the appointment of Mr. Kenneth J. Nicolson as Honorary Consul for Hungary at Calcutta, has been confirmed by His Majesty's Government.

H. A. F. METCALFE,
Foreign Secy. to the Govt. of India.

FINANCE DEPARTMENT.

NOTIFICATION.

Simla, the 25th June 1936.

No. F. 22 (10)-R. II/36.—In exercise of the powers conferred by sub-rule (2) of rule 33, rule 37, rule 42 and clause (*d*) of rule 44 of the Civil Services (Classification, Control and Appeal) Rules, and of his powers in respect of personnel serving under his control who have been excluded from the scope of the said Rules, the Governor-General in Council is pleased to direct that the following further amendments shall be made in the General Provident Fund (Central Services) Rules, namely:—

In rule 6 of the said Rules—

(*i*) Sub-rule (2) shall be omitted;

(*ii*) Sub-rule (3) shall be renumbered as (2).

J. C. NIXON,
Secy. to the Govt. of India.

DEPARTMENT OF COMMERCE.

NOTIFICATIONS.

MERCHANT SHIPPING.

Simla, the 27th June 1936.

No. 5-M.I. (26)/35.—The services of Engineer Commander J. E. Moloney, R.I.N., officiating Principal Engineer and Ship Surveyor, Mercantile Marine Department, Calcutta, were replaced at the disposal of the Defence Department (Navy Branch), with effect from the 10th February 1936.

No. 5-M.I. (35)/35.—Commander G. M. Osborne-Smith, R.I.N., has been appointed officiating Nautical Surveyor, Mercantile Marine Department, Calcutta, with effect from the 5th December 1935.

No. 5-M.I. (35)/35.—The services of Commander J. Cameron, R.I.N., Nautical Surveyor, Mercantile Marine Department, Calcutta, were replaced at the disposal of the Defence Department (Navy Branch), with effect from the 5th February 1936.

REGISTRATION OF ACCOUNTANTS.

The 27th June 1936.

No. 1-A. (34)/35.—In exercise of the powers conferred by sub-section (*2*) of section 144 of the Indian Companies Act, 1913 (VII of 1913), the Governor-General in Council is pleased to direct that the following further amendments shall be made in the Auditor's Certificates Rules, 1932, the same having been previously published as required by the said sub-section, namely :—

(1) After the proviso to rule 36 of the said Rules the following further proviso shall be inserted, namely :—

"Provided further that a person who, on completion of his apprenticeship under the regulations for the award of the Government Diploma in Accountancy, is required under this rule to serve a further period, may serve such period under articles with the same accountant with whom he served his apprenticeship, whether the said accountant is an Approved Accountant or not, provided he rejoins him within six months from the date of completion of his apprenticeship."

(2) After clause (*a*) of sub-rule (1) of rule 40 of the said Rules the following proviso shall be inserted, namely :—

"Provided that if the articled clerks in the employ of an Approved Accountant include any such person as is referred to in the second proviso to rule 36, the total number of articled clerks employed by such accountant may be four."

H. DOW,

Addl. Secy. to the Govt. of India.

DEPARTMENT OF INDUSTRIES AND LABOUR.

NOTIFICATIONS.

Simla, the 27th June 1936.

No. M.-1055.—In exercise of the powers conferred by sections 29 and 31A of the Indian Mines Act, 1923 (IV of 1923), as amended by the Indian Mines (Amendment) Act, 1936 (XI of 1936), the Governor-General in Council is pleased to make the following further temporary regulations, having satisfied himself that for the prevention of apprehended danger or the speedy remedy of conditions likely to cause danger it is necessary in making these regulations to dispense with the delay that would result from their previous publication and reference to Mining Boards :—

TEMPORARY REGULATIONS FOR COAL MINES.

1. (*1*) These regulations may be called the Supplementary Coal Mines (Temporary) Regulations, 1936.

(*2*) They shall apply only in respect of coal mines.

2. No liquid oxygen explosive shall be used in any underground part of a mine.

3. In any mine in which safety lamps are required to be used by any regulations for the time being in force no shot shall be fired unless the explosive is one of the "Permitted Explosives" allowed to be used by any order under the Coal Mines Act, 1911. 1 & 2 Geo. 5, ch. 50.

4. (*1*) In any place in which the use of a locked safety lamp is for the time being required by any regulations for the time being in force, no shot shall be fired until the shot-firer has examined both the place where the shot is to be fired and all accessible places within a radius of 60 feet for the presence of inflammable gas and has found such places.

(*2*) No shot shall be fired at any place underground in a mine unless the place itself and all accessible places within a distance of 60 feet :—

(*a*) are naturally wet, or

(*b*) have been drenched with water or dusted with stone to such an extent that there will be no danger of dry coal-dust being raised into the air by the shot.

5. In any underground part of a mine two or more shots shall not be charged or fired in the same place simultaneously, if the explosive used is not one of the "Permitted Explosives" allowed to be used by any order under the Coal Mines Act, 1911 : 1 & 2 Geo. 5, ch. 50.

Provided that this regulation shall not apply to—

(*a*) working places in any ventilating district of a mine which is naturally wet throughout ; or

(*b*) a cross-measure drift in stone if such drift does not contain dry coal-dust ; or

(*c*) shafts which are being sunk through such measures.

6. When inflammable gas or any noxious gas is detected in any working place or in any part of a mine the place or part shall, if necessary for the safety of workers, be immediately fenced off, and steps shall be taken without delay to remove the gas by improving the ventilation. During the removal of the gas no person shall be allowed to remain on the return side of the ventilating district in which the gas is detected.

POSTS AND TELEGRAPHS.

The 18th June 1936.

No. Fs. A. 173/35, Coll. No. 143.—In exercise of the powers conferred by the Indian Post Office Act, 1898 (VI of 1898), the Governor-General in Council is pleased to direct that the following further amendment shall be made in the Indian Post Office Rules, 1933, namely :—

For rule 33 of the said rules the following rule shall be substituted, namely :—

" 33. (1) The weight of a parcel shall not exceed 5½ seers (440 tolas) unless it is registered, in which case the weight shall not exceed 10 seers (800 tolas).

(2) The length of a parcel shall not exceed 3½ feet and the length and girth combined shall not exceed 6 feet.

(3) No parcel shall be such that by reason of its shape, manner of packing or any other feature, it cannot be carried by post without serious inconvenience or risk. "

A. G. CLOW,
Secy. to the Govt. of India.

Registered No. C207

The Calcutta Gazette

THURSDAY, JULY 9, 1936.

PART IB

Educational Notices.

Krishnagar College—Session 1936-37.

The 9th May 1936.

The College re-opens on the 2nd July 1936 after the long vacation. Admission will commence immediately after the publication of the results in the *Calcutta Gazette*. The College teaches up to the B.A. and B.Sc. standard of the Calcutta University. It has got affiliation in the usual Arts and Science subjects in Honours in English, Sanskrit and Mathematics. The College is likely to be affiliated in Civics from 1936-37. The monthly tuition fee amounts to Rs. 6 for the I.A., Rs. 7 for the I.Sc. and B.A. and Rs. 8 for the B.Sc. classes.

The College is situated in the midst of an extensive compound of over 100 bighas containing a large number of playgrounds. There is provision for all outdoor games. The College provides well-equipped gymnasium, common room and reading rooms for the use of the students, who receive individual attention both in their studies and their games. Arrangements have been made to divide the boys into groups and place them under the effective and intimate guardianship of their teachers. There is a fine two-storyed Hindu hostel in the College compound and hostel charges (including rent, furniture, light and medical attendance) do not exceed Rs. 13 a month. The boarders keep excellent health, and the general health in the town is also quite good. A new Muhammadan hostel has been constructed this year. Charges are moderate.

A considerable number of Government and private free-studentships and stipends is awarded every year in August or September to poor but deserving students of the College. Four stipends of Rs. 10, Rs. 7-12, Rs. 4 and Rs. 3 are also available for boarders of the Hindu hostel in straitened circumstances. The College Conversion Mohsin stipends are annually awarded to deserving Muhammadan students.

For prospectus and admission form, apply enclosing stamped and addressed envelope *to the Principal, Krishnagar College.*

S. C. Ghosal, *Officer-in-charge.*

Admission to the Compounders' Class, Ronaldshay Medical School, Burdwan Session 1936-37.

Burdwan, the 26th June 1936.

Applications for admission to the Compounders' class of the Ronaldshay Medical School, Burdwan, will be received up to the 10th August 1936, except on Sundays and public holidays.

Applications should be supported by—

(*a*) A true copy of certificate of passing the Matriculation or its accepted equivalent examination.

(*b*) A testimonial of good moral character from a gazetted officer or a gentleman of equal position or from the Principal or Head Master of the college or school in which the candidate last studied. (Where more than six weeks have elapsed between the date of leaving college or school and the date of application for admission, a second certificate of character is required covering the intervening period. This should be obtained from a gazetted officer or a gentleman of equal position such as an Honorary Magistrate having an intimate knowledge of the applicant.)

(c) A certificate of age—Matriculation certificate or a certificate from the head of the institution in which the candidate last studied will also be accepted as evidence of age.

Applications from the candidates must reach the office of the Superintendent on or before the 10th August 1936 for registration of their names and they must attend for personal interview on Tuesday, the 25th August 1936, at 11 a.m., at the office of the Superintendent, Ronaldshay Medical School, Burdwan, together with the original certificates.

Late or incomplete applications will not be considered.

Note.—Every male student who is selected for admission shall pay an entrance fee of Rs. 4 and first half-yearly instalment of Rs. 12 tuition fee. He shall also pay the amount of sports and athletic club fee of Rs. 2. The session will begin from 1st September 1936.

E. H. LOSSING, CAPTAIN, I.M.S., *Supdt.*,
Ronaldshay Medical School, Burdwan.

University of Dacca.

NOTIFICATION.

University Buildings, Ramna, Dacca, the 1st June 1936.

Admission for the session 1936-37 in the Faculties of Arts (including Commerce), Science and Law will commence on 2nd July 1936. Candidates for admission must interview the Provost concerned, not later than the 21st July 1936 or three weeks after the date of publication of the results of the qualifying examination passed by the candidates in question, whichever is later. The Admission Committee may however at their discretion grant exceptions to this rule and may impose such fines for lateness as they deem fit. Class fee for undergraduate students (other than those reading for Honours in Physics and Chemistry) and Law students Rs. 8 per mensem; for undergraduate students reading for Honours in Physics or Chemistry, Special Honours in Physics and Mathematics, for M.A. students and M.Sc. students' in Mathematics Rs. 10 per mensem; for M.Sc. students in Physics and Chemistry Rs. 12 per mensem. Seat rent in halls from Rs. 2 to Rs. 4 and total minimum cost of tuition and living from Rs. 22 to Rs. 25 a month. The University has up to date laboratories (including an experimental Psychology Laboratory), an excellent library and an organised tutorial system. It possesses splendid residential facilities and strong studenst' unions and offers exceptional opportunities for athletics.

2. There are certain facilities for women students. Conveyance by bus is available for the intending women students.

3. Special facilities are given to poor students of backward communities by way of rent-free seats, special stipends and remission of part of examination fees.

4. There is a special Honours Course in Physics and Mathematics with no subsidiary subjects. This course provides opportunity for a special study of theoretical Physics from the Mathematical point of view. Provision has also been made for the teaching of Bio Chemistry in the Honours Course of Chemistry.

5. Further particulars regarding admission will be sent post-free on application to the Registrar.

N. AHMAD, *Registrar.*

Burdwan Division.

Chinsura, the 6th June 1936.

Applications are invited for admission into the panel of candidates for the posts of English teachers in Government High and Normal Schools and in Madrasahs as well as for the posts of Sub-Inspectors of Schools in the scale of Rs. 75—8/2—115—5/2—135—10/2—175 in the Subordinate Educational Service for the year 1936-37.

2. Only graduates preferably with an Honours degree, possessing a degree or diploma in teaching or first class M.A. or M.Sc. in *subjects useful for school work* shall be eligible for inclusion in the panel.

3. The candidates must not exceed 25 years of age on 1st August 1936 unless they have full two years' teaching experience or have worked as Sub-Inspector of Schools for two years. In that case the age-limit may be relaxed up to 30 years. They must be residents of the Burdwan Division and British subjects.

4. No candidate shall apply simultaneously to more than one Inspector of Schools.

5. The applications should be submitted in duplicate in the prescribed form as given below (schedule II) and be accompanied by the original Matriculation and other University certificates and diplomas as well as any other certificates relating to the attainments and character of the candidates.

6. Every candidate shall furnish certificates written not more than one year prior to the date of application from two responsible persons unconnected with his College or University and not related to him, testifying to his private character.

7. No person shall be eligible for appointment who is not of sound mind, good physique and active habits and free from organic defects.

8. No person shall be eligible for appointment who has endeavoured to enlist for his candidature the support of persons of influence or of officials of Government. Spontaneous recommendations from persons interested in, or otherwise known to, the candidate shall be disregarded.

9. The candidates whose names have already been empanelled, are required to renew their application for retention of their names in the panel to be considered again, failing which their names will be automatically removed from the panel.

10. The applications will be received by the undersigned on or before 31st July 1936.

K. C. RAY,
Inspector of Schools, Burdwan Division.

Schedule II.

Education Department.

Forms of application for appointment to posts of English teacher and Sub-Inspector of Schools in the scale of Rs. 75- 8/2—115—5/2—135—10/2—175 in the Subordinate Educational Service.

(1) Name of applicant and present address (in full).

(2) Permanent address in full.

(3) Date of birth and age last birthday.

(4) Place of birth and permanent residence.

(5) Nationality at birth, religion and caste.

(6) Father's name, place of birth and nationality at birth.

(7) Father's address and profession (if dead, give address at date of death).

(8) Mother's place of birth and nationality at birth.

(9) Name of school last attended before entering University, giving address, with dates of entering and leaving.

(10) Name of University and College. Give dates of entering and leaving, and dates of passing examinations. State subjects studied, degrees, honours or prizes obtained and class and position in the class obtained at all University and other public examinations.

(11) Name of the Training College attended. Give year and class of the B. T. degree and the subject in which you specialised during training.

(12) Give details of any original work. If published, copies of the publication should be attached.

(13) Give details of any teaching experience with dates, and names of institutions. Any testimonials as to your ability as a lecturer, teacher, etc., should be attached.

(14) Give names of games played—

(*a*) at school,

(*b*) at college, and

(*c*) after leaving the college.

State whether you have had experience in organising games.

(15) State whether you are a trained Scout Master if, so, what troops you have been in charge of and where.

(16) Name two persons of position (with address in full) who can, if necessary, testify to your character, and to accuracy of your statements.

(17) If the time since leaving the school is not fully accounted for by replies given above, account for the remainder here with dates.

(18) Are you free from pecuniary embarrassments ? If you are under liability to repay money advanced by an institution or party for your education, state the particulars.

(19) Have you ever been pronounced unfit at any time for Government employment by the Medical Board or any other duly constituted medical authority in Bengal ? What serious illness have you suffered from since leaving the school ?

(20) Have you appeared at any examination for Government service ? If so, state when and for what appointment. With what result?

(21) Have you previously been rejected for any appointment in Government service ? If so, when and for what reason ?

(22) Are you willing to be appointed to any post temporarily vacant ?

(23) Indicate the class of post you prefer, *i.e.*, an English teachership or Sub Inspectorship or both.

(24) State here any facts not recorded above which should be mentioned as supporting your suitability for appointment.

(*Signature*) .....

(*Date*) .....

Rajshahi College, Rajshahi.

Rajshahi College, the 20th May 1936.

Re-opens on Wednesday, the 1st July 1936.

1. Affiliations:—

B. A.—English, Bengali, History, Philosophy, Mathematics, Economics, Sanskrit, Arabic and Persian, Honours in all subjects except Bengali and Persian.

B. Sc.—Physics, Chemistry, Mathematics. Honours in all subjects.

I. A.—English, Bengali, History, Sanskrit, Logic, Mathematics, Persian, Arabic, Civics, Botany.

I. Sc.—English, Bengali, Mathematics, Physics, Chemistry, Botany.

2. Girl students are admitted to all classes.

3. The following medals and prizes are awarded every year:—

(*i*) The Lalit Mohon Gold Medal to the student who stands highest on the History Honours list at the B. A. from Rajshahi College.

(*ii*) Four Mohini Mohon Ray Prizes, two of the value of Rs. 80 each, and two of the value of Rs. 25 each, to the students who obtain the highest and the next highest marks respectively at the B. A. and B. Sc. Honours Examinations from the Rajshahi College; and

(*iii*) A Rani Monmohini Silver Medal to the most successful student from the Rajshahi College on the combined results of the I. A. and I. Sc. University Examinations.

4. In addition to a number of half-free studentships the College awards every year the following scholarships and stipends, each of which is tenable for two consecutive sessions:—

(A) To third year students.

One K C. Sarkar Scholarship of Rs. 15 a month.

One Rani Monmohini Scholarship of Rs. 10 a month.

Two Rani Monmohini Scholarships of Rs. 8 a month.

One Rajshahi College Scholarship of Rs. 5 a month.

One Mayo Memorial Scholarship of Rs. 4 a month.

Two Mohsin Stipends of Rs. 5 a month each.

(B) To first year students.

One Rani Monmohini Scholarship of Rs. 8 a month.

Two Mohsin Stipends of Rs. 5 a month each.

5. There are commodious and well-equipped, two-storied Government hostels both for Hindus and Muhammadans. Hostel charges payable every month total Rs. 13 for Hindus and Rs. 12 for Muslims. Besides an excellent gymnasium, the College has arrangements for almost all popular games and physical exercises including rowing, water polo and swimming.

6. The scale of monthly tuition fees is Rs. 6 for I. A. and B. A. (Pass or Honours), Rs. 7 for I. Sc and Rs. 8 for B. Sc. students. The science laboratories are well-appointed and the College has its own power house and electric installation.

7. Twenty-five per cent. of the vacancies in each class will be reserved for Mahomedan students, if necessary; but this reservation will not hold good if sufficient applications are not received at least one week before the day on which the College re-opens.

8. Applications for admission should be made in the prescribed form immediately after the publication of the University results.

Admission forms and prospectus can be had from the College office on personal application or by sending a postage stamp of nine pies. Students who failed in the University Examination and desire re-admission should attach the University Admit Card and their Crossed list to their application.

H. GANGULI, *Professor-in-charge.*

Chittagong Medical School.

Chittagong, the 9th June 1936.

Admission to the Compounder Class—Session 1936-37.

Applications for admission to the compounders' class of the Chittagong Medical School will be received up to the 31st July 1936.

Application should be supported by—

(1) A true copy of certificate of passing the Matriculation or its accepted equivalent examination.

(2) A certificate of good character from a Deputy Magistrate or a gentleman of equal position or from the Principal or Head Master of the College or School in which the candidate last studied.

(3) A certificate of age. Matriculation certificate or a certificate from the head of the institution in which the candidate last studied will be accepted as evidence of age.

The applications from the candidates must reach the office of the Superintendent on or before the 31st July 1936 for registration of their names and they must attend for personal interview on Saturday, the 1st August 1936, at 9 a.m., at the office of the Superintendent, Chittagong Medical School, together with the original certificates.

Late and incomplete applications will not be entertained.

Every male student who is selected for admission shall pay an entrance fee of Rs. 4 and first half-yearly instalment of Rs. 12 tuition fees. He shall also pay the annual sports and athletic club fee of Rs. 2.

G. B. W. FISHER, CAPT., I.M.S.,
Superintendent, Chittagong Medical School.

Chittagong Division.

Chittagong, the 18th June 1936.

Rules for the guidance of private candidates for the Matriculation Examination of 1937.

The following rules for the guidance of private candidates for the Matriculation Examination are published for general information :—

1. Private students are those who have not attended any recognised or unrecognised school for at least one year previous to the examination. The term "private students" includes *bonâ fide* school-masters.

2. Private students must appear at the Test Examination of one of the following institutions on the dates mentioned below :—

Comilla Zilla School, Noakhali R. K. Zilla School, Chittagong Collegiate School and Rangamati High English School.

Dates of examination—4th, 5th, 6th, 7th and 8th January 1937.

Female candidates and teachers of schools recognised by the Calcutta University, or any other University or any Board of Secondary Education in India or by the Department are not required to pass the Test Examination for private candidates held by the Inspector of Schools, Chittagong Division.

3. Private candidates offering hygiene as one of their subjects need not obtain the previous permission of the University for that purpose. They will be required to satisfy the Inspector of Schools that they have undergone a course of training in the subject. For this purpose they should submit to the Divisional Inspector of Schools, along with their applications for permission to appear at the Test Examination, certificates of training in it from a recognised medical practitioner or from a recognised teacher in hygiene.

4. Each private student will pay a fee of Rs. 5 to the head of the institution in which he appears for the Test Examination. No private student will be admitted to the Test Examination unless he is accompanied for the purpose of identification by some person known to the headmaster of the institution in which he appears.

5. Application for permission to appear at the Test Examination must be sent in time in duplicate in the enclosed form so as to reach this office not later than the 20th November 1936.

N. B.—A student who failed to pass or appear at the annual examination for promotion to class X at the end of the session 1935 and then left the school can, under no circumstances, be allowed to appear at the Test Examination.

6. The Inspector on being satisfied will grant necessary permission and return the application, which will then be the candidate's passport for admission to the Test Examination.

7. Every candidate must deposit his fee for the Test Examination with the headmaster of the institution in which he intends to appear at least 18 days before the date of that examination. The headmaster will deposit the amount realised by him into the local Treasury and forward a copy of the Treasury chalan to this office. He should also submit to this office an account of the charges incurred by him (including remuneration to examiners) for conducting the examination of private candidates, together with vouchers in support of the charges, on receipt of which the Director of Public Instruction will be moved to sanction the expenditure.

8. The headmasters of the institutions named in paragraph 2 above should direct private candidates who satisfy the test to appear before them in due time, with their applications for admission to the Matriculation Examination, and to sign them in their presence. They will then grant the necessary certificate and forward the applications to the Inspector for countersignature, after which they will be returned to the headmasters for delivery to the candidates concerned.

9. In no circumstances should the fee for the Matriculation Examination be sent to the Inspector's office. It should be sent to the Controller of Examinations, Calcutta University, by the candidates themselves, together with the countersigned applications.

10. Private students must understand that the Test Examination of any school other than those named above will not be accepted by the Inspector.

11. The Matriculation Examination will be held in March 1937, the exact dates of which will be notified by the University.

12. Applications and fees for admission to the Matriculation Examination must reach the office of the Controller of Examinations on or before the date to be fixed by the University.

A. RAHMAN KHAN,

Inspr. of Schools, Chittagong Division (offg.).

To be submitted in duplicate.

To the Inspector of Schools, Chittagong Division.

Sir,

I have the honour to solicit permission to appear at the Test Examination of the school. The particulars required under the rules are supplied below :—

1. I studied last at the school. I appeared at the Matriculation Examination of 19 but failed.

2. The transfer certificate is enclosed.

The Controller's receipt is enclosed.

3. My age (1) on the 1st March 193 will be yrs. ms.

4. A certificate (2) from a respectable gentleman is enclosed.

5. A certificate (3) of good conduct from the Secretary of the school in which I have been serving is enclosed.

6. Residence—Village P. O.

District.

7. Father's name

8. Second language besides English.

9. Vernacular language for composition.

10. Vernacular language from which translation is to be made into English in the 1st English paper.

I have taken up the following subjects :—

(*a*) Additional Mathematics.
(*b*) Additional paper in the classical language.
(*c*) History.
(*d*) Geography.
(*e*) Elementary Mechanics.

I have the honour to be,

Sir,

Your most obedient pupil,

Address -

Dated

The 193

Orders by the Inspector of Schools, Chittagong Division.

Memo. No.

Chittagong, the 193

The permission asked for is granted.

Inspector of Schools, Chittagong Division.

Memo. No.

Chittagong, the 193

Copy forwarded to the Headmaster

School for information and guidance.

Inspector of Schools, Chittagong Division.

N. B.—Strike out the portion not required.

(1) No candidate who will not have completed the age of 15 years on the first day of the Matriculation Examination will be allowed to appear at it.

(2) The certificate should be to the following effect :—

"I hereby certify that I know..... He has prosecuted a regular course of study and has been subject to proper discipline. He has not read in any school since the last Matriculation Examination."

(3) Required in the case of a teacher candidate only.

Office of the Inspector of Schools, Burdwan Division.

Chinsura, the 8th June 1936.

Rules for the admission of Private Candidates to the Calcutta University Matriculation, Intermediate and B.A. Examinations, 1937.

I.—Matriculation Examination.

1. Private students are those who have not attended any recognised or unrecognised High English School for at least one year previous to the Matriculation Examination. The term "private students" also includes teachers of schools other than High Schools recognised by the Calcutta University.

Students who got plucked at the last annual examination of Class IX will not be admitted to the ensuing Test Examination.

2. Private candidates must appear at the Test Examination to be held on Tuesday, the 1st December 1936, and the following days at any of the Government High Schools in the districts of Hooghly, Howrah, Bankura and Birbhum or at the Bengal-Nagpur Railway Indian High School at Kharagpur or at the East Indian Railway High School at Asansol.

3. Applications for admission to the Test Examination must be supported by the following particulars :—

(*a*) Transfer certificate (in original) granted to the candidate by the Headmaster of the recognised school in which he last read, or an affidavit sworn by the guardian before a competent Court that the candidate has never attended any school.

In the case of a candidate who previously appeared at the Entrance or Matriculation Examination, the Registrar's or Controller's receipt (in original) for the fee paid.

(*b*) A documentary evidence (such as horoscope or an affidavit sworn by the guardian before a competent Court) regarding the age of the candidate who never attended any recognised school.

(*c*) A certificate from a respectable gentleman other than a relative to the effect that **the candidate has prosecuted a regular course of study and has been subject to proper discipline, and that he was not attached to any school since the last Matriculation Examination held in March 1936.** Detailed information is needed under this head. The person granting the certificate should state his social or professional position.

(*d*) In the case of school masters, a certificate of good conduct from the Secretary of the school in which the candidate is serving.

(*e*) In case of candidates whose migration has been sanctioned by the Calcutta University, the Registrar's letter communicating sanction **in original.**

(*f*) Names of subjects (including vernacular and additional subjects) in which the candidate wishes to be examined.

(*g*) Home address in full—Village or name of street, post-office, thana and district.

(*h*) Ordinary place of residence (address in full) ; and duration of residence.

(*i*) Father's name, as well as guardian's name, and address.

4. Each private candidate will have to pay a fee of Rs. 5, which should be remitted to the Inspector of Schools, Burdwan Division, Chinsura, along with his application for admission to the Test Examination by the **7th November 1936,** after which date a fine of Rs 2 will have to be paid for each week's delay. No fee will be accepted after the 25th November 1936, even on payment of fine. **Under no circumstance will the admission fee be refunded.** No private candidate will be admitted to the Test Examination unless he is accompanied, for the purpose of identification, by some person known to the office of the Inspector of Schools, Burdwan Division, or to the staff of the school where he will appear. **Those who are not bona fide residents of the Burdwan Division will not be admitted to the Test Examination.**

5. **The fee for the Matriculation Examination should NOT be sent to this office.** It should be deposited with the Headmaster of the school where the candidate appeared at the Test Examination.

6. The Matriculation Examination for 1937 will be held on the dates as declared by the University.

II.—Intermediate and B.A. Examinations.

1. Subdivisional Inspectors of Schools, Sub-Inspectors of Schools and *bonâ fide* teachers of English schools, who have served as such for the full period of three academical years preceding the examinations, will be admitted to the abovementioned examinations.

2. Candidates for the Intermediate and B.A. Examinations must produce certificates of character and length of service from the Secretaries of their respective schools. Candidates for the B.A. Examination must forward with their applications their F.A. or I.A. certificates, and those for the Intermediate Examination their Entrance or Matriculation certificates. Candidates admitted to a former examination must produce the Registrar's receipt in addition.

3. Under section 19 of the Indian Universities Act, candidates for the Intermediate and B.A. Examinations are informed that their applications for admission to these examinations will not be considered unless they enclose with their applications to this office the sanction of the Senate to appear at the said examination. Candidates, who have applied for or have obtained the special permission of the Senate for the purpose, are required, under section 9, Chapter XV of the Revised Regulations dealing with the registration of University students, to apply at once to the Registrar for the registration of their names as University students. No person will be deemed a "University student" unless and until his name has been duly registered, and none but "University students" will be eligible for admission to any University examination other than the Matriculation

4. The printed form of application should be carefully and correctly filled in and submitted to this office on or before the 20th December 1936 at the latest, together with other papers as mentioned in rules 2 and 3, after which no application will be received.

5. The dates of Intermediate and B.A. Examinations of 1937 may be obtained from the Controller of Examinations, Calcutta University.

K. C. RAY,
Inspector of Schools, Burdwan Division.

Board of Intermediate and Secondary Education, Dacca.

Ramna, the 15th June 1936.

The undermentioned candidates are declared to have passed the High School Examination, 1936.

[The letter or letters affixed to the name of a candidate indicate that he has obtained not less than four-fifths of the marks in the subject:—

L indicates Classical Language.

M ,, Mathematics (Compulsory).

m ,, Mathematics (Additional).]

FIRST DIVISION.

(In order of merit.)

1	Basurai, Nirmalchandra (ML) ..	15-1	St. Gregory's High School.
	Gupta, Ranjitkumar (M) ..	16-1	Pogose School.
3	Sen, Bidhubhushan (M) ..	15-1	Nabakumar Institution.
4	Chakrabarti, Nikhil (M) ..	15-1	Dacca Collegiate School.
5	,, Manasni (ML) ..	..	Eden Intermediate College.
6	Ghosh, Radharani (M) ..	..	Ditto.
7	Pal, Nadiarchand (m) ..	18-5	Kisorilal Jubilee School.
8	Majumdar, Sarojkumar (M) ..	15-3	Pogose School.
9	Dnar, Niharchandra (Mm) ..	15-6	Ditto.
10	Chaudhuri, Amita (M) ..	..	Eden Intermediate College.
	Muhammad Nurul Alam (M) ..	15-5	Dacca Collegiate School.
12	Brahmachari, Subodhlal (M) ..	15-2	Ukil's Institution.
	Goswami, Madhusudan (M) ..	16-0	Pogose School.
14	Sengupta, Kalyankumar (M) ..	15-4	Dacca Collegiate School.
15	Dasgupta, Amiya ..	..	Kamrunnessa Intermediate College.
16	Basu, Anima (M) ..	..	Eden Intermediate College.
	Sen, Bina (M) ..	..	Ditto.
18	Abul Khair Muhammad Mamunur Rashid (M) ..	17-0	Dacca Collegiate School.
19	Matthias, Joseph ..	16-9	St. Gregory's High School.
20	Dasgupta, Samareschandra ..	17-2	Private.
21	Bhattacharyya, Subodhchandra	16-6	St. Gregory's High School.
22	Ghosh, Usharani ..	..	Anandamoyee Girls' High School.
23	Basu, Santi ..	..	Narasiksha Mandir.
	Rakshit, Santi (M) ..	..	Kamrunnessa Intermediate College.
25	Sen, Dinendranath (M) ..	15-9	St. Gregory's High School.
26	Basu, Sujata ..	..	Eden Intermediate College.
27	Sengupta, Monica ..	..	Kamrunnessa Intermediate College.
28	Barari, Taru ..	..	Eden Intermediate College.
29	Nurul Haque (M) ..	16-5	St. Gregory's High School.
30	Mitra, Arati ..	..	Eden Intermediate College.
31	Basak, Naraharidas (M) ..	15-2	Ukil's Institution.
32	Dobey, Probabati (M) ..	..	Eden Intermediate College.
	Muhammad Badiuzzaman Khan	15-11	Government Moslem High School.
34	Basak, Gopalkrishna (M) ..	15-2	Dacca Collegiate School.
	Jobeda Khatun (M) ..	..	Eden Intermediate College.
36	Sen, Saeindramohan (Mm) ..	15-3	Pogose School.
37	Datta, Santoshchandra (M) ..	16-0	Armenitola Government High School.
38	Chattopadhyay, Jadablal ..	16-1	Pogose School.
	Pal, Ramanimohan ..	16-0	East Bengal Institution.
	Sen, Kanika (M) ..	..	Eden Intermediate College.
	Sengupta, Jyotikana (M) ..	..	Ditto.
42	Sen, Parul ..	..	Private.
43	Gofranuddin Patwary ..	16-1	Dacca Collegiate School.
44	Sengupta, Sunilchandra ..	15-11	Armenitola Government High School.
45	Biswas, Manoranjan (M) ..	15-4	Kisorilal Jubilee School.
46	Debi, Suruchi ..	..	Kamrunnessa Intermediate College.
47	Dasgupta, Jyotirmay ..	16-0	Nabakumar Institution.
48	Abdur Razzaque (M) ..	19-2	Pogose School.
	Ray, Jitendranath ..	15-7	Armenitola Government High School.
50	Gope, Matilal ..	17-5	Imperial Salimullah Intermediate College.
51	Quamaruzzaman ..	15-2	Government Moslem High School.
52	Basak, Balaichand (M) ..	17-6	Pogose School.
	Gupta, Chitralekha ..	..	Kamrunnessa Intermediate College.
54	Ghoshal, Nirmalkumar ..	16-1	Imperial Salimullah Intermediate College.
55	Muhammad Abu Bakr ..	16-0	West End High School.
56	Gupta, Nilima (M) ..	..	Eden Intermediate College.
57	Chakrabarti, Anilchandra ..	16-0	Kisorilal Jubilee School.
58	Debi, Nirupama ..	..	Kamrunnessa Intermediate College.
	Ghosh, Sisirkrishna ..	17-2	Pogose School.
60	Guha, Jahnaviratan ..	18-7	St. Gregory's High School.
	Kundu, Jagatbandhu ..	16-9	Nabakumar Institution.
62	Pal, Bholanath ..	16-2	East Bengal Institution.
63	Datta, Kohinoor ..	..	Kamrunnessa Intermediate College.
64	Mukhopadhyay, Sukhendranath	15-4	Kisorilal Jubilee School.
	Sarkar, Hemnalini ..	..	Eden Intermediate College.
66	Sengupta, Sailendramohan ..	16-2	St. Gregory's High School.
67	Majumdar, Shefali ..	..	Eden Intermediate College.

68	Abul Qasim Muhammad Aziz-ullah (M) ..	16-5	Dacca Collegiate School.
	Bhattacharyya, Sailendranath ..	15-2	Pogose School.
	Gangopadhyay, Surendrachandra	15-10	Ukil's Institution.
	Sen, Bimalendu (M) ..	15-1	Ditto.
72	Mitra, Latika ..	..	Eden Intermediate College.
73	Pal, Gopalchandra (M) ..	16-6	Private.
	Saha, Indubhushan (M) ..	15-2	Dacca Collegiate School.
75	Bandyopadhyay, Kausikimohan	15-11	Armenitola Government High School.
	Datta, Amareschandra ..	17-1	Nabakumar Institution.
	Neogi, Bela ..	..	Eden Intermediate College.
78	Das, Arunkumar (M) ..	17-0	Dacca Collegiate School.
79	Muhuri, Kiranbala ..	..	Eden Intermediate College.
80	Majumdar, Bijan ..	..	Kamrunnessa Intermediate College.
81	Sarkar, Kamalendu (M) ..	15-1	Armenitola Government High School.
82	Chakrabarti, Nripendrachandra	17-6	Nabakumar Institution.
83	Dasgupta, Makhanlal ..	15-4	Kisorilal Jubilee School.
	Mukhopadhyay, Sarada-prasanna ..	16-0	Nabakumar Institution.
85	Bhattacharyya, Bhupatimohan	17-1	Kisorilal Jubilee School.
	,, Sanatkumar ..	17-0	Dacca Collegiate School.
	Ghosh, Amiyarani	..	Kamrunnessa Intermediate College.
88	Dasgupta, Sailaja ..	..	Narisiksha Mandir.
89	Basu, Usharanjan ..	15-2	Kisorilal Jubilee School.
	Chakrabarti, Anilkumar ..	15-10	East Bengal Institution.
	Dasgupta, Prativa	..	Kamrunnessa Intermediate College.
92	Abdus Salam ..	16-8	Ukil's Institution.
93	Nandi, Jyotirmay ..	15-3	Nabakumar Institution.
94	Chakrabarti, Asha ..	..	Kamrunnessa Intermediate College.
	Sahabanik, Radharaman ..	15-1	Pogose School.

SECOND DIVISION.

(In alphabetical order.)

	Abdur Rouf ..	19-1	Graduates' High School.
	Abu Muhammad Nurul Haq ..	15-5	Government Moslem High School.
	,, Nasr Ahmad ..	17-3	Dacca Collegiate School.
	,, Nasr Muhammad Mahmood	15-5	Ditto.
	,, Sharf Masihur Rahman ..	15-0	Ditto.
	Abul Fazl Muhammad Mahbubur Rahman ..	16-3	Ditto.
	,, Hashem ..	16-5	Government Moslem High School.
	,, Khair Muhammad Shamsul Islam ..	18-2	Ditto.
	,, Khair Muhammad Siddiq (M) ..	16-8	Ditto.
10	,, Waleed Muhammad Fazlul Bari ..	16-1	Dacca Collegiate School.
	Adhikari, Bidhubhushan ..	17-6	Imperial Salimullah Intermediate College.
	Afsaruddin ..	17-10	Tegharia High School.
	Aich, Manindrakumar ..	17-3	East Bengal Institution.
	Alauddin Ahmad ..	17-7	Government Moslem High School.
	Anwaruddin Ahmad ..	20-2	Priyanath High School.
	Bandyopadhyay, Ardhendu-mohan ..	16-10	Kisorilal Jubilee School.
	,, Benoykumar	15-10	Armenitola Government High School.
	,, Debkumar ..	22-2	Ukil's Institution.
	,, Harinarayan	15-8	Nabakumar Institution.
20	,, Kalipada ..	17-0	Ukil's Institution.
	,, Kesablal ..	16-1	Dacca Collegiate School.
	,, Pransankar ..	17-7	Imperial Salimullah Intermediate College.
	Banik, Sridamchandra ..	16-7	Ukil's Institution.
	Barari, Mukul ..	..	Private.
	Basak, Balaichand ..	18-2	Armenitola Government High School.
	,, Debaprasad ..	16-6	Pogose School.
	,, Dineschandra ..	18-1	East Bengal Institution.
	,, Nirmalkumar ..	15-1	Dacca Collegiate School.
	,, Nityagopal ..	22-10	Private.
30	,, Radharaman ..	19-4	Ditto.
	,, Shomechand ..	15-1	Pogose School.
	,, Subodhgopal ..	17-5	Ukil's Institution.
	,, Sudhanyalal ..	16-4	Dacca Collegiate School.
	Basu, Arunendu ..	15 11	Armenitola Government High School.
	,, Biva ..	..	Kamrunnessa Intermediate College.
	,, Chittaranjan ..	15-2	Nabakumar Institution.
	,, Jyotirmay ..	18-10	Kisorilal Jubilee School.
	,, Mritunjay ..	15-8	Pogose School.
	,, Nilima ..	..	Kamrunnessa Intermediate College.
40	,, Nirmalkumar ..	15-3	Dacca Collegiate School.
	,, Parimalkumar ..	16-1	Nabakumar Institution.
	,, Parimalkumar ..	16-1	Pogose School.
	,, Salilkumar ..	17-7	Dacca Collegiate School.
	,, Samarendranath ..	16-3	Pogose School.
	,, Samarendranath (M) ..	18-2	Dacca Collegiate School.
	,, Sitansukumar ..	17-2	Pogose School.
	,, Usharani ..	..	Narisiksha Mandir.
	Baul, Chittaranjan ..	16-2	Pogose School.
	Bhattacharyya, Bhaboschandra	17-4	Dacca Collegiate School.
50	,, Hirendranath	15-2	Pogose School.
	,, Kalipada ..	19-0	Nabakumar Institution.
	,, Saktipada ..	18-3	St. Gregory's High School.

	Bhaumik, Ajitkumar	..	16-0	Pogose School.
	Biswas, Snehalata	..	..	Kamrunnessa Intermediate College.
	Chakladar, Sukhamay	..	17-5	Kisorilal Jubilee School.
	Chakrabarti, Byomkes	..	15-3	East Bengal Institution.
	,, Haribhushan	..	16-2	Imperial Salimullah Intermediate College.
	,, Jyotishchandra	..	18-6	Kisorilal Jubilee School
	,, Nagendra	..	16-8	Dacca Collegiate School.
60	,, Nagendrakumar	..	16-1	Nabakumar Institution.
	,, Sarendrakumar	..	16-2	Dacca Collegiate School.
	,, Samarendrakumar		15-7	Pogose School.
	,, Sudhirchandra	..	17-1	Ditto.
	,, Sushama(M)	..	..	Eden Intermediate College.
	Chanda, Somendrakumar	..	15-9	Pogose School.
	Chattopadhyay, Kanti	..	17-0	Dacca Collegiate School.
	,, Khagendra-chandra	..	22-7	Private.
	,, Nripendra	..	15-4	Dacca Collegiate School.
	,, Santoshchandra	..	15-1	Pogose School.
70	,, Satyagopal	..	16-3	Ditto.
	Chaudhuri, Phanindrakumar	..	17-11	West End High School.
	,, Rathindranarayan		15-3	Pogose School.
	,, Sachindranath	..	16-3	Dacca Collegiate School.
	Das, Amulyadhan	..	18-0	Private.
	,, Brindabanchandra	..	17-1	Pogose School.
	,, Girijaballav	..	17-11	Ditto.
	,, Gopalchandra	..	16-0	Armenitola Government High School.
	,, Gopalchandra	..	16-4	Pogose School.
	,, Gourangachandra	..	20-1	Kisorilal Jubilee School.
80	,, Gourangalal	..	21-8	St. Gregory's High School.
	,, Haripada	..	16-1	Private.
	,, Jitendrakishore	..	16-2	Kishorilal Jubilee School.
	,, Madangopal	..	17-2	Ditto.
	,, Maranchand	..	17-6	Graduates' High School.
	,, Nareschandra	..	21-4	Ditto.
	,, Nitaichand	..	19-3	Pogose School.
	,, Prangopal	..	19-10	East Bengal Institution.
	,, Ratiprasanna	..	18-4	Ditto.
	,, Subodhchandra	..	19-5	Kisorilal Jubilee School.
90	,, Sudarshan	..	17-8	East Bengal Institution.
	,, Taranikanta	..	18-3	Private.
	,, Umarani	..	..	Ditto.
	,, Upendrakumar	..	16-4	Pogose School.
	Dasgupta, Amiyes	..	18-2	Dacca Collegiate School.
	,, Birendra	..	16-2	Nabakumar Institution.
	,, Brajagopal	..	20-0	Private.
	,, Dinendradhar	..	17-1	Kisorilal Jubilee School.
	,, Ganeschandra	..	19-1	Ditto.
	,, Jadabchandra	..	21-9	Private.
100	,, Sabitri	..	..	Ditto
	,, Santoshkumar	..	16-2	East Bengal Institution.
	Dasinha, Arunchandra	..	15-1	Ditto.
	Datta Ajitkumar	..	19-2	Nabakumar Institution.
	,, Anibranjan	..	16-1	Pogose School.
	,, Bhabatoshranjan	..	15-7	Ditto.
	,, Bhupendralal	..	20-2	Dacca Collegiate School.
	,, Hitendramohan	..	17-0	Imperial Salimullah Intermediate College.
	,, Khagendramohan	..	16-2	Kisorilal Jubilee School.
	,, Mira	..	..	Eden Intermediate College.
110	,, Nakuleswarprasad	..	16-1	Graduates' High School.
	,, Nikhilchandra	..	16-0	Ditto.
	,, Niva	..	..	Kamrunnessa Intermediate College.
	,, Parimalchandra	..	20-1	Nabakumar Institution.
	,, Santoshranjan	..	15-1	Pogose School.
	De, Anilkumar	..	17-9	Dacca Collegiate School.
	,, Ashutosh	..	18-3	Pogose School.
	,, Haripada	..	18-1	Graduates' High School.
	,, Hirendranath	..	17-3	Kisorilal Jubilee School.
	,, Jibankrishna	..	17-0	Graduates' High School.
120	,, Kalachand	..	18-1	Tegharia High School.
	,, Mukundachandra	..	21-1	Graduates' High School.
	,, Sureschandra	..	17-1	Ditto.
	Debi, Belarani	..	..	Kamrunnessa Intermediate College.
	,, Leela	..	..	Ditto.
	,, Parulbala	..	..	Private.
	Dhar, Anilchandra	..	17-4	Pogose School.
	,, Ramendrakumar	..	16-1	Ditto.
	Dobey, Narayanranjan	..	17-3	Armenitola Government High School.
	Eyakut Banu	..	..	Kamrunnessa Intermediate College.
130	Gangopadhyay, Sadaranjan	..	16-2	St. Gregory's High School.
	Ghosh, Abhamayee	..	..	Anandamoyee Girls' High School.
	,, Ajitkumar	..	19-4	Pogose School.
	,, Bejoykumar	..	17-8	Ditto.
	,, Gouranganchandra	..	20-4	East Bengal Institution.
	,, Hemlata	..	..	Private.
	,, Kalidas	..	17-2	Kisorilal Jubilee School.
	,, Niharkumar	..	20-1	Private.
	,, Parimalchandra	..	17-2	Kisorilal Jubilee School.
	,, Pritilata	..	..	Kamrunnessa Intermediate College.

140	Ghosh, Prabhabati	..	..	Narisiksha Mandir.
	,, Rabindrachandra	..	19-2	Dacca Collegiate School.
	,, Santisudha	..	..	Private.
	,, Sarojkumar, I	..	15-8	St. Gregory's High School.
	,, Sarojkumar, II	..	15-1	Ditto.
	,, Sobha	..	..	Kamrunnessa Intermediate College.
	,, Sushilchandra	..	18-7	Private.
	Ghoshal, Manoranjan	..	16-2	East Bengal Institution.
	Ghoshchaudhuri, Sudharanjan		16-2	St. Gregory's High School.
	Ghoshdastidar, Pravasranjan	..	17-2	K sorilal Jubilee School.
150	Gope, Nepalchandra	..	18-8	Private.
	Goswami, Nimaigopal	..	18-2	Pogose School.
	,, Radhikanandan	..	18-4	St. Gregory's High School.
	Guha, Bhagabati		..	Eden Intermediate College.
	,, Helen	..	..	Kamrunnessa Intermediate College.
	,, Jagadindramohan	..	16-6	East Bengal Institution.
	,, Niranjan	..	17-5	Tegharia High School.
	,, Nirmalkanta	..	18-0	Graduates' High School.
	,, Parimalkumar	..	15-8	Armenitola Government High School.
	,, Ranjitraman	..	17-6	Pogose School.
160	Gupta, Arunbikas	..	17-1	Ditto.
	,, Bani		..	Kamrunnessa Intermediate College.
	,, Pratima	..	..	Ditto.
	,, Sucharukumar	..	16-2	Pogose School.
	Hemayetuddin Ahmed	..	16-2	Government Moslem High School.
	Kamrunnessa Khatun	..	..	Kamrunnessa Intermediate College.
	Kundu, Narendrakumar	..	20-11	Nabakumar Institution.
	Manalanabis, Rabindranath	..	18-6	Dacca Collegiate School.
	Majumdar, Prabasini	..	..	Anandamoyee Girls' High School.
	,, Samarendranath	..	16-8	Ukil's Institution.
170	,, Santoshkumar	..	16-0	Graduates' High School.
	Mallik, Bireswar	..	16-8	Pogose School.
	Mian Muhammad Abdullah	..	16-2	Priyanath High School.
	Mitra, Anjali	..	..	Eden Intermediate College.
	,, Chittapriya	..	18-9	Pogose School.
	,, Dhirendralal	..	19-3	St. Gregory's High School.
	,, Manjula	..	..	Kamrunnessa Intermediate College.
	,, Sukhendra	..	18-3	Dacca Collegiate School.
	,, Sumiti	..	..	Kamrunnessa Intermediate College.
	,, Sushitibala	..	..	Anandamoyee Girls' High School.
180	Mitraneogi, Ganeschandra	..	18-1	Nabakumar Institution.
	Moulik, Nikhilranjan	..	17-0	Kisorilal Jubilee School.
	Muhammad Aminul Haq	..	19-2	Government Moslem High School.
	,, Asadul Karim	..	15-2	Armenitola Government High School.
	,, Azizullah Chaudhury	..	15-1	Dacca Collegiate School.
	,, Ilias Mian	..	18-3	Ukil's Institution.
	,, Ishaq	..	17-8	Private.
	,, Shahabuddin	..	20-6	Ditto.
	,, Siddiqur Rahman		16-2	Government Moslem High School.
	,, Wahiullah	..	15-2	Ditto.
190	Mukhopadhyay, Bimala	..	..	Narisiksha Mandir.
	,, Brajendra-chandra	..	18-11	Pogose School.
	,, Durgaprosad	..	15-0	Armenitola Government High School.
	,, Krishnadas	..	17-0	Pogose School.
	,, Pranaba	..	19-7	Dacca Collegiate School.
	Naha, Suprava	..	..	Kamrunnessa Intermediate College.
	Nath, Pravakar	..	17-5	Dacca Collegiate School.
	Nazimuddin Ahmad	..	18-9	Government Moslem High School.
	Pal, Charu	..	..	Kamrunnessa Intermediate College.
	,, Hemantachandra	..	17-7	Ukil's Institution.
200	,, Prangopal	..	16-8	K sorilal Jubilee School.
	,, Rabindranath	..	16-2	Nabakumar Institution.
	,, Radhashyam	..	16-5	Ukil's Institution.
	,, Sunilkumar	..	18-2	Kisorilal Jubilee School.
	Pandey, Basudeb	..	20-5	Ditto.
	Poddar, Sukeslal	..	20-3	Ditto.
	Rahat Buksh	..	16-1	Government Moslem High School.
	Ray, Amalchandra	..	18-0	Ukil's Institution.
	,, Anima (M)	..	..	Kamrunnessa Intermediate College.
	,, Bina	..	..	Ditto.
210	,, Debabrata	..	17-7	Pogose School.
	,, Jagadindranath	..	17-9	Graduates' High School.
	,, Karunaranjan	..	16-4	St. Gregory's High School.
	,, Niharchandra	..	17-1	Armenitola Government High School.
	,, Pares	..	17-4	Dacca Collegiate School.
	,, Parimalchandra	..	19-4	Pogose School.
	,, Pradyotkumar	..	15-7	Kisorilal Jubilee School.
	,, Prafullakumar	..	16-5	Dacca Collegiate School.
	,, Pratimaram	..	..	Anandamoyee Girls' High School.
	,, Rabindrachandra	..	15-4	Ukil's Institution.
220	,, Rakhalchandra	..	18-1	Ditto.
	,, Samarendra	..	15-2	Pogose School.
	,, Sourindranath	..	17-3	Priyanath High School.
	,, Sudhansukumar	..	16-2	Dacca Collegiate School.
	,, Sukumar	..	15-10	Kisorilal Jubilee School.
	,, Sunilchandra	..	17-1	Nabakumar Institution.
	,, Sumiti	..	..	Kamrunnessa Intermediate College.
	,, Supriti	..	..	Ditto.
	,, Susilranjan		18-1	Pogose School.
	Sadaruddin Ahmad	..	16-7	Government Moslem High School.

230	Saha, Radhacharan	..	16-6	West End High School.
	,, Subodhchandra	..	18-5	Ditto.
	Sarkar, Anantakumar	..	16-1	Nabakumar Institution.
	,, Parimalkumar	..	15-2	Imperial Salimullah Intermediate College
	,, Suryyakumar	..	18-3	Private.
	Sen, Ajitkumar	..	17-8	Dacca Collegiate School.
	,, Ajitranjan	..	17-4	St. Gregory's High School.
	,, Anilchandra	..	16-7	Dacca Collegiate School.
	,, Arunava	..	15-7	Ditto.
	,, Minarani	..	..	Kamrunnessa Intermediate College.
240	,, Mrinmayee	..	..	Ditto.
	,, Niharkumar	..	15-1	Kisorilal Jubilee School.
	,, Prakritiranjan	..	17-7	Pogose School.
	,, Sailendrasankar	..	21-1	Private.
	,, Santimay	..	19-2	Graduates' High School.
	,, Sova	..	..	Kamrunnessa Intermediate College.
	Sengupta, Amalendu	..	16-6	East Bengal Institution.
	,, Chittaranjan	..	19-2	Pogose School.
	,, Jibendramohan	..	18-9	Graduates' High School.
	,, Kiranchandra	..	22-5	East Bengal Insitution.
250	,, Nani	..	..	Anandamoyee Girls' High School.
	,, Nirmalendu	..	18-2	Private.
	,, Pratulkumar	..	16-5	Dacca Collegiate School.
	,, Rathindranath	..	15-11	St. Gregory's High School.
	,, Renuka	..	..	Narisiksha Mandir.
	,, Sarleskumar	..	15-8	East Bengal Institution.
	,, Santwana	..	..	Kamrunnessa Intermediate College.
	,, Sibaprasad	..	17-3	Private.
	Shaikh Noor Muhammad	..	17-0	Nabakumar Institution.
	Shamsul Arefeen	..	15-1	Armenitola Government High School.
260	Sharful Islam Khan	..	16-2	Imperial Salimullah Intermediate College.
	Sil, Sachindrachandra	..	15-3	Kisorilal Jubilee School.
	Sinha, Biswoswar	..	17-1	Nabakumar Institution.
	,, Samarendra	..	16-6	East Bengal Institution.
	Som, Dilipkumar	..	18-3	Pogose School.
	,, Sudhamayee	..	..	Anandamoyee Girls' High School.
	Sultan Ahmad Khan	..	15-11	Graduates' High School.
	Sur, Subhamay	..	15-11	Dacca Collegiate School.
	Syam, Abanikumar	..	16-2	Kisorilal Jubilee School.
	Syed Asheq Husain	..	17-11	Government Moslem High School.
270	,, Fazlul Bari	..	15-0	Ditto.
	,, Fazlur Rahman	..	15-11	Dacca Collegiate School.
	,, Mahmud	..	19-4	Government Moslem High School.
	,, Muhammad Jamaluddin Husain.		17-2	Ditto.
	Syeduddin Khan	..	20-2	Imperial Salimullah Intermediate College.
275	Tapadar, Sankarnarayan	..	18-0	Pogose School.

THIRD DIVISION.

(In alphabetical order.)

	Abdul Ali	..	19-3	Kisorilal Jubilee School.
	,, Ghani Bhuiyan	..	16-8	Ditto.
	Abdur Rahman	..	18-9	Dacca Collegiate School.
	,, Rashid	..	22-1	Private.
	Alauddin Ahmad	..	18-1	Ditto.
	Amiruddin Ahmad	..	17-0	Priyanath High School.
	Anisur Rahman	..	17-10	Nabakumar Institution.
	Atarthi, Sureschandra	..	18-2	Kisorilal Jubilee School.
	Bandyopadhyay, Bhupeschandra	..	21-2	Ditto.
10	,, Rama	..	..	Kamrunnessa Intermediate College.
	,, Santichandra		17-4	Priyanath High School.
	Banik, Debendrakumar	..	19-2	Private.
	Bardhan, Sailendrachandra	..	15-9	Nabakumar Institution.
	Basak, Brindabanchandra	..	18-6	Private.
	,, Rasballav	..	20-2	Priyanath High School.
	,, Taraknath	..	16-6	Ukil's Institution.
	Basu, Adhirkumar	..	16-3	Tegharia High School.
	,, Chandramadhab	..	15-2	Pogose School.
	,, Jatindrakumar	..	19-2	Kisorilal Jubilee School.
20	,, Krishnadas	..	15-3	Pogose School.
	,, Narendrakumar	..	21-2	Imperial Salimullah Intermediate College.
	,, Ratneswar	..	21-5	Private.
	,, Sudhendu	..	19-0	St. Gregory's High School.
	Bhattacharyya, Jagadischandra		15-1	Kisorilal Jubilee School.
	Bhaumik, Pramathanath	..	19-3	Tegharia High School.
	Biswas, Haridas	..	21-1	East Bengal Institution.
	Chakrabarti, Anutosh	..	19-2	Kisorilal Jubilee School.
	,, Atulchandra	..	19-1	Nabakumar Institution.
	,, Kalidas	..	17-8	Tegharia High School.
30	Chattopadhyay, Sanatkumar	..	21-1	Private.
	,, Sumati	..	..	Kamrunnessa Intermediate College.
	Chaudhuri, Girijabhushan	..	16-4	Nabakumar Institution.
	,, Ramendrachandra		19-7	Kisorilal Jubilee School.
	Das, Anilchandra	..	17-8	Imperial Salimullah Intermediate College.
	,, Aswinikumar	..	16-8	Private.
	,, Haripada	..	18-3	West End High School.
	,, Nanigopal	..	15-3	Kisorilal Jubilee School.

	Das, Radhamadhab	..	22 4	West End High School.
	,, Sukhalal	..	21 0	Graduates' High School.
40	Dasgupta, Amiyaranjan	.	18 6	Pogose School.
	,, Rajatkumar		18-5	Nabakumar Institution
	,, Santisudha	..	..	Kamrunnessa Intermediate College.
	Datta, Dwijeschandra	..	16-4	Nabakumar Institution.
	,, Harischandra		20-1	Private.
	,, Nityagopal		16 0	Graduates' High School.
	De, Mohanlal	..	22-9	Private.
	Fazlur Rahim	..	16 2	St Gregory's High School.
	Ghosh, Snehalata	..		Private.
	Guha, Amlchandra	..	18-2	Pogose School.
50	Guharai, Ramendramohan	..	16-3	Dacca Collegiate School.
	Laha, Satyajitkumar	..	16-2	Ditto.
	Majumdar, Sukdeb	..	15-5	Kisorilal Jubilee School.
	,, Tarakanta	..	19-1	Graduates' High School.
	Miran Fazlur Rahman		17-3	Dacca Collegiate School.
	Muhammad Abdul Majid	.	15-2	Armenitola Government High School.
	,, Shahabuddin	..	18-4	Nabakumar Institution.
	,, Tayyebur Rahman		17-4	Government Moslem High School.
	,, Yunus Khan	..	16-2	West End High School
	Mukhopadhyay, Phanindra-mohan	.	21-7	Dacca Collegiate School.
60	Mumtazuddin Ahmad Chaudhury		16 2	Armenitola Government High School.
	Nandi, Nareskumar	.	17-0	Pogose School.
	Nandirai, Prantoshchandra	..	20-10	Private.
	Palchaudhuri, Saradindu	..	22-1	Ditto.
	Ray, Amalchandra	..	17-5	Pogose School.
	,, Krishna	..	..	Private.
	,, Sailendrachandra	..	19-3	Kisorilal Jubilee School.
	,, Santoshkumar	..	18-1	Ditto.
	,, Sunilkumar	..	16-1	Pogose School.
	Sadaruddin Ahmad	..	21-2	Private.
70	Sarkar, Gobindalal	..	17-5	Ditto.
	Sen, Debabrata	..	16-2	Ditto.
	,, Juthika	..	..	Ditto.
	,, Puspamayee	..	..	Ditto.
	Sengupta, Gopalchandra	..	18-0	Imperial Salimullah Intermediate College.
	,, Labanya	..		Kamrunnessa Intermediate College.
	Sur, Nirmalchandra	..	19-11	Nabakumar Institution.
77	Wajed Ali Khan	..	21-1	Imperial Salimullah Intermediate College.

The undermentioned candidates are declared to have passed the High Madrasa Examination, 1936.

[The letter or letters affixed to the name of a candidate indicate that he has obtained not less than four-fifths of the marks in the subject or subjects :—

E	indicates	English.
M	,,	Mathematics (Compulsory).
m	,,	Mathematics (Additional)
V	,,	Vernacular.
F	,,	Fiqh.
h	,,	Islamic History.]

FIRST DIVISION.

(In order of merit)

1	Abul Khair Muhammad Muhabbat Ali (Mm) .	17-1	Dacca Islamic Intermediate College.
2	Abu Yahya Muhammad Abdur Rouf (VFh) ..	20-2	Ditto.
3	Syed Sajjad Husain (EM) ..	15-1	Ditto.
4	Muhammad Abdul Majid Mian, I (M) ..	16 4	Ditto.
5	,, Abdul Hai (M) .	17-0	Rajshahi Madrasa.
6	Shaikh Mazhar Sarkar (M) ..	16-10	Jangipur Madrasa.
7	,, Muhammad Abdur Rahim (M) ..	16-5	Ahmadia Madrasa.
8	Muhammad Abdul Hakim (M)	15-1	Nuria Madrasa, Chandpur.
	,, Ramzan	16-6	Pakundia Madrasa.
10	Shaikh Muhammad Habibullah (M)	16-3	Jangipur Madrasa.
11	Muhammad Azizul Islam Dewan (M) ..	17-3	Hooghly Madrasa.
12	,, Murshed Ali (M) ..	15-9	Rajshahi Madrasa.
13	,, Mubarak Ali (M)	15-4	Nuria Madrasa, Chandpur.
14	,, Abdul Jabbar (M)	15-0	Lakshmipur Madrasa.
15	,, Sanaullah (M) ..	15-10	Hooghly Madrasa.
16	Khundkar Muhammad Abdul Mumin	15-10	Ahmadia Madrasa.
17	Muhammad Altaf Ali ..	19-1	Husamia Madrasa.
18	Khwaja Ahmad ..	15-4	Nuria Madrasa, Chandpur.

19	Abdul Qayyum (M) ..	16-3	Chittagong Islamic Intermediate College.
	Muhammad Husain (M) ..	17-8	Ditto.
21	Khundkar Khwaja Bazlur Rahman ..	16-10	Roqea Madrasa.
22	Sultan Ahmad ..	17-2	Ahmadia Madrasa.
23	Muhammad Taha ..	16-2	Rajshahi Madrasa.
24	,, Bahasuddin ..	17-0	Roqea Madrasa.
	Nasiruddin Ahmad (M) ..	17-1	Pakundia Madrasa.
26	Abul Bashar Muhammad Jasimuddin Akhand (M) ..	17-5	Naogaon Co-operative Madrasa.
	Muhammad Shamsul Huda ..	15-2	Husamia Madrasa.
	Nuruddin Ahmad (M) ..	16-5	Ahmadia Madrasa.
29	Muhammad Sohrab Ali (M) ..	17-6	Hooghly Madrasa.
30	Mir Niyamat Ali ..	15-3	Bhabta Azizia Madrasa.
31	Muhammad Abdul Munim ..	15-8	Pakundia Madrasa.
	Nur Ahmad ..	16-4	Chittagong Islamic Intermediate College.
33	Khalilur Rahman ..	17-1	Nuria Madrasa, Chandpur.
	Muhammad Abu Tal b ..	17-4	Rajshahi Madrasa.
	Rashid Ahmad ..	19-8	Private.
36	Abdul Halim (M) ..	16-3	Lakshmipur Madrasa.
	Irfanul Haq ..	18-3	Chittagong Islamic Intermediate College.
38	Syed Abdus Samad (M) ..	16-1	Ditto.
39	Muhammad Mizanur Rahman ..	16-1	Bogra Central Madrasa.
40	,, Tafazzul Husain ..	17-3	Haragach Madrasa.
41	,, Ashrafuddin ..	16-7	Nuria Madrasa, Chandpur.
42	Aftabuddin Ahmad ..	17-9	Hooghly Madrasa.
	Muhammad Abdur Rahman ..	15-0	Husamia Madrasa.
	,, Abdur Rashid ..	15-5	Pakundia Madrasa.
	,, Atiqullah ..	15-11	Ahmadia Madrasa.
	,, Kawsaruddin Bhuiyan ..	15-4	Yusufia Madrasa.
	,, Usman Ghani ..	16-4	Haragach Madrasa.
48	Hafizullah Pradhania ..	15-11	Nuria Madrasa, Chandpur.
	Shaikh Muhammad Idris ..	17-10	Hooghly Madrasa.
50	Muhammad Mansur Ali ..	17-11	Hemayet Memorial Madrasa.
51	Idris Ahmad ..	19-4	Bhabta Azizia Madrasa.
	Muhammad Sadiq Ali ..	16-4	Bogra Central Madrasa.
53	,, Sabit Ali ..	15-10	Serajganj Islamic Intermediate College.
54	Shaikh Ayubur Rahman (M) ..	15-10	Hooghly Madrasa.
55	Muhammad Sirajul Haq ..	18-1	Nuria Madrasa, Chandpur.
56	Qazi Faqir Muhammad ..	19-0	Bhabta Azizia Madrasa.
57	Muhammad Yunus ..	15-2	Chittagong Islamic Intermediate College.
58	Shaikh Muhammad Abdul Jabbar	18-9	Dacca Islamic Intermediate College.
59	Muhammad Abdul Wahid ..	17-3	Serajganj Islamic Intermediate College.
60	,, Sultan Shah Chaudhury ..	15-4	Porsha Madrasa.
61	,, Muslimuddin Khan	17-7	Moizuddin Madrasa.
62	Qazi Daliluddin Ahmad ..	16-8	Yusufia Madrasa.
63	Abdul Wazid ..	15-2	Koundia Madrasa.
64	Shaikh Abdur Rashid ..	19-0	Bhabta Azizia Madrasa.
65	Muhammad Abdul Majid ..	17-5	Nasirabad Madrasa.
66	,, Abdul Ghafur ..	18-1	Haragach Madrasa.
	,, Abdur Rahim ..	20-11	Nasirabad Madrasa.
68	Abul Kalam Muhammad Aqamatullah ..	15-0	Sitakund Madrasa.
	Majumdar Mumtazuddin Ahmad Rosnabadi ..	16-7	Ditto.
	Mirza Muhammad Abdul Hamid	16-10	Nuria Madrasa, Barisal.
	Muhammad Mustafizur Rahman	17-0	Abdur Rub Madrasa.
72	,, Abdur Rashid ..	16-5	Nuria Madrasa, Chandpur.
	Sirajul Haq Bhuiyan ..	16-3	Chittagong Islamic Intermediate College.
74	Muhammad Saiful Islam ..	20-2	Ditto.

SECOND DIVISION.

(In alphabetical order.)

	Abdul Aziz ..	19-3	Chittagong Islamic Intermediate College.
	,, Ghafur ..	21-9	Hammadia Madrasa.
	,, Hakim ..	18-4	Private.
	,, Haq ..	15-8	Chittagong Islamic Intermediate College.
	,, Jabbar Akhand ..	17-11	Private.
	,, Khaliq ..	17-11	Chittagong Islamic Intermediate College.
	,, Majid ..	16-3	Rajshahi Madrasa.
	,, Malik Bhuiyan ..	18-3	Chittagong Islamic Intermediate College.
	,, Quddus ..	16-8	Nuria Madrasa, Chandpur.
10	,, Wahhab ..	15-4	Sitakund Madrasa.
	Abdur Rahman Bhuiyan ..	17-2	Dacca Islamic Intermediate College.
	,, Rahman Mirdah ..	16-5	Ditto.
	,, Rashid ..	19-7	Private.
	,, Rouf Khan ..	21-0	Dacca Islamic Intermediate College.
	Abu Khalid Muhammad Abdul Mannan Khan ..	19-7	Nuria Madrasa, Chandpur.
	,, Nasr Muhammad Hikmatullah ..	17-10	Private.
	,, Nasr Muhammad Minhajuddin ..	15-11	Yusufia Madrasa.
	Abul Asad Muhammad Mutiur Rahman ..	19-1	Naogaon Co-operative Madrasa.
	,, Bashar Muhammad Aminul Haq ..	21-1	Ahmadia Madrasa.

20	Abul Faiz	..	16-11	Chittagong Islamic Intermediate College.
	,, Fatah Muhammad Abdul Ali	..	16-11	Hammadia Madrasa.
	,, Hashim Howladar	..	19-2	Private.
	,, Khair Muhammad Abdul Hamid (V)	..	18-6	Dacca Islamic Intermediate College.
	,, Khair Muhammad Abdul Qadir	..	15-0	Jangipur Madrasa.
	,, Khair Muhammad Abdus Salam	..	18-6	Keundia Madrasa.
	,, Qasim Muhammad Bashir-ullah	..	17-6	Private.
	,, Qasim Muhammad Bazlur Rahman Khan	..	16-2	Keundia Madrasa.
	,, Qasim Muhmmad Shamsul Alam Siddiq	..	18-2	Private.
	Afsaruddin Ahmad	..	15-5	Ditto.
30	Ahmad Ali	..	16-5	Serajganj Islamic Intermediate College.
	,, Ali	..	17-9	Gaibandha Madrasa.
	,, Ali	..	29-2	Private.
	Ali Ahmad	..	17-3	Dacca Islamic Intermediate College.
	Ansaruddin Ahmad	..	15-2	Abdur Rub Madrasa.
	Asmat Ali Khan	..	18-0	Keundia Madrasa.
	Azizur Rahman	..	18-2	Dacca Islamic Intermediate College.
	Badiul Alam	..	16-5	Ahmadia Madrasa.
	Diwan Akbar Ali	..	17-0	Naogaon Co-operative Madrasa.
	Fazlur Rahman	..	17-8	Ahmadia Madrasa.
40	Ghazi Abdul Qadir	..	20-2	Private.
	,, Muhammad Irshadullah		18-7	Ahmadia Madrasa.
	Habibullah Mian	..	17-3	Husamia Madrasa.
	,, Wakil	..	22-0	Nuria Madrasa, Chandpur.
	Hafizuddin Ahmad	..	19-8	Roqea Madrasa.
	Husainuddin	..	17-8	Ditto.
	Khalilur Rahman	..	18-0	Ahmadia Madrasa.
	Khundkar Muhammad Ansar Ali	..	19-2	Hooghly Madrasa.
	,, Muhammad Maqsud Ali	..	19-1	Rajshahi Madrasa.
	,, Muhammad Mufizuddin	..	18-2	Ditto
50	,, Muhammad Shamsul Huda	..	20-3	Furfura Madrasa.
	,, Muhammad Yunnus		20-2	Ditto
	,, Qasim Ali	..	21-11	Bhabta Azizia Madrasa.
	Lal Muhammad, I	..	18-10	Private.
	Mansur Ahmad	..	20-3	Ditto.
	Mir Amjad Husain	..	18-1	Ditto.
	,, Muhammad Misbahuddin		15-5	Nuria Madrasa, Chandpur.
	Mirza Muhammad Abdus Sattar		19-1	Private.
	Mufizuddin Ahmad	..	17-4	Ditto.
	Muhammad Abdul Aziz	..	17-9	Ahmadia Madrasa.
60	,, Abdul Bari	..	18-1	Nasirabad Madrasa.
	,, Abdul Ghani	..	15-6	Chittagong Islamic Intermediate College.
	,, Abdul Ghani	..	17-3	Ahmadia Madrasa.
	,, Abdul Ghani	..	15-6	Keundia Madrasa.
	,, Abdul Ghani Shaikh		17-5	Kazdia Madrasa.
	,, Abdul Hakim	..	15-1	Meher Shah Rasti Madrasa.
	,, Abdul Haq	..	15-6	Chittagong Islamic Intermediate College.
	,, Abdul Jabbar	..	17-3	Private.
	,, Abdul Khaliq	..	18-0	Ditto.
	,, Abdul Khaliq, II	..	15-6	Nasirabad Madrasa.
70	,, Abdul Khaliq, III		19-2	Ditto.
	,, Abdul Khaliq Bhuiyan	..	16-3	Dacca Islamic Intermediate College.
	,, Abdul Latif	..	15-9	Abdur Rub Madrasa.
	,, Abdul Majid	..	17-9	Private.
	,, Abdul Majid	..	15-3	Meher Shah Rasti Madrasa.
	,, Abdul Majid Khan		19-2	Hazrabari Madrasa.
	,, Abdul Majid Mian, II		15-3	Dacca Islamic Intermediate College.
	,, Abdul Mallik	..	15-2	Magura Abdul Ghani Madrasa.
	,, Abdul Mannan Khan		17-8	Moizuddin Madrasa.
	,, Abdul Muttalib	..	15-0	Hooghly Madrasa.
80	,, Abdul Quddus	..	16-7	Lakshmipur Madrasa.
	,, Abdul Quddus	..	21-1	Hammadia Madrasa.
	,, Abdul Wahid Khan		21-0	Hazrabari Madrasa.
	,, Abdur Rahman Faqir	..	17-8	Pakundia Madrasa.
	,, Abdur Razzaq	..	17-3	Nuria Madrasa, Chandpur.
	,, Abdus Samad	..	20-7	Keundia Madrasa.
	,, Abdus Sattar	..	16-3	Jangipur Madrasa.
	,, Abdus Sattar, I	..	18-0	Nasirabad Madrasa.
	,, Abdus Sattar Mian		22-4	Private.
	,, Abed Ali	..	16-6	Hazrabari Madrasa.
90	,, Abu Tahir	..	17-6	Lakshmipur Madrasa.
	,, Abul Husain Bhuiyan	..	15-4	Ahmadia Madrasa.
	,, Abul Qasim	..	18-9	Haragach Madrasa.
	,, Afiluddin	..	22-9	Magura Abdul Ghani Madrasa.
	,, Afsaruddin	..	19-7	Hemayet Memorial Madrasa.
	,, Ahsan Ali Mian	..	19-4	Private.

		Muhammad Akhtaruzzaman Khan ..	18-1	Private.
	,,	Ali ..	15-9	Bhabta Azizia Madrasa.
	,,	Aminullah (M) ..	16-0	Lakshmipur Madrasa.
	,,	Arifuddin ..	17-11	Bogra Central Madrasa.
100	,,	Asghar Ali ..	20-4	Private.
	,,	Ayubullah ..	17-2	Lakshmipur Madrasa.
	,,	Azhar Ali Mian ..	16-2	Moizuddin Madrasa.
	,,	Azizullah ..	20-6	Private.
	,,	Badruddoja Talukdar ..	18-4	Roqea Madrasa.
	,,	Bashir Husain ..	15-6	Chittagong Islamic Intermediate College.
	,,	Bashirullah Mian ..	18-10	Lakshmipur Madrasa.
	,,	Bazlur Rahman ..	17-0	Serajganj Islamic Intermediate College.
	,,	Daneshuddin ..	16-5	Roqea Madrasa.
	,,	Farhatullah ..	17-4	Dacca Islamic Intermediate College.
110	,,	Ghulam Mawla ..	18-2	Nasirabad Madrasa.
	,,	Habibullah ..	18-7	Dacca Islamic Intermediate College.
	,,	Habibur Rahman ..	19-1	Moizuddin Madrasa.
	,,	Hafizur Rahman ..	16-4	Bogra Central Madrasa.
	,,	Husain Chaudhury	21-1	Porsha Madrasa.
	,,	Husain Majumdar	15-10	Husamia Madrasa.
	,,	Idris Ali ..	19-7	Bogra Central Madrasa.
	,,	Idris Ali Mian ..	21-7	Rajshahi Madrasa.
	,,	Idris Khan ..	19-10	Nuria Madrasa, Chandpur.
	,,	Ikram Husain ..	20-6	Private.
120	,,	Imtaz Husain ..	15-5	Jangipur Madrasa.
	,,	Intaz Ali ..	17-1	Rajshahi Madrasa.
	,,	Irshad Ali ..	16-0	Naogaon Co-operative Madrasa.
	,,	Ismail Husain ..	15-4	Rajshahi Madrasa.
	,,	Israil Mian ..	21-0	Ditto.
	,,	Izzat Husain ..	16-3	Hemayet Memorial Madrasa.
	,,	Junab Ali ..	18-5	Hooghly Madrasa.
	,,	Kamaluddin ..	15-6	Serajganj Islamic Intermediate College.
	,,	Kubbad Ali Mian ..	15-3	Abdur Rub Madrasa.
	,,	Mahibbur Rahman Berbhuiyan	16-0	Dacca Islamic Intermediate College.
130	,,	Maqsud Ali ..	17-4	Yusufia Madrasa.
	,,	Mufizuddin ..	17-6	Dacca Islamic Intermediate College.
	,,	Mufizuddin ..	15-1	Lakshmipur Madrasa.
	,,	Muflzur Rahman Khundkar ..	17-6	Haragach Madrasa.
	,,	Muhiuddin ..	18-11	Serajganj Islamic Intermediate College.
	,,	Muinuddin ..	18-10	Private.
	,,	Mujibur Rahman ..	17-6	Bhatra Madrasa.
	,,	Muniruddin ..	18-9	Private.
	,,	Munirul Haq ..	15-4	Ditto.
	,,	Muniruzzaman ..	17-1	Chittagong Islamic Intermediate College.
140	,,	Musharraf Husain ..	15-2	Meher Shah Rasti Madrasa.
	,,	Muslimuddin Khundkar ..	20-4	Haragach Madrasa.
	,,	Mutiur Rahman ..	15-0	Keundia Madrasa.
	,,	Naimuddin Bhuiyan	17-2	Nasirabad Madrasa.
	,,	Nekbar Ali ..	15-3	Nuria Madrasa, Chandpur.
	,,	Nurrullah ..	17-2	Lakshmipur Madrasa.
	,,	Raisuddin Khan ..	18-9	Pakundia Madrasa.
	,,	Ruknuddin ..	17-8	Yusufia Madrasa.
	,,	Rustam Ali Howladar ..	19-1	Nuria Madrasa, Barisal.
	,,	Safiullah Bhuiyan	19-1	Chittagong Islamic Intermediate College.
150	,,	Sahib Ali ..	21-1	Private.
	,,	Saidul Haq ..	19-7	Rajshahi Madrasa.
	,,	Sajjad Husain (M)	16-1	Jangipur Madrasa.
	,,	Saidur Rahman ..	16-8	Hazrabari Madrasa.
	,,	Sayeed Husain ..	17-3	Nuria Madrasa, Barisal.
	,,	Saziruddin ..	16-8	Hemayet Memorial Madrasa.
	,,	Shahid Ali Shariff ..	16-10	Keundia Madrasa.
	,,	Shamsul Haq ..	17-7	Nuria Madrasa, Chandpur.
	,,	Shamsul Haq, I ..	17-1	Dacca Islamic Intermediate College.
	,,	Shamsul Haq, II ..	18-3	Ditto.
160	,,	Shamsul Haq, III ..	19-7	Ditto.
	,,	Shamsur Rahman	18-0	Furfura Madrasa.
	,,	Sikandar Ali ..	17-10	Nuria Madrasa, Chandpur.
	,,	Sulaiman ..	20-0	Naogaon Co-operative Madrasa.
	,,	Sultan Ahmad ..	16-2	Ahmadia Madrasa.
	,,	Tahiruddin ..	18-5	Keundia Madrasa.
	,,	Tajul Husain Khan	18-3	Yusufia Madrasa.
	,,	Tajammul Husain Khan ..	16-1	Private.
	,,	Obaidullah Mian ..	20-11	Bhabta Azizia Madrasa.
	,,	Osman Ali ..	17-2	Rajshahi Madrasa.
170	,,	Wajid Husain ..	19-4	Bogra Central Madrasa.
	,,	Yaqub Ali Sardar	17-3	Nuria Madrasa, Chandpur.
	,,	Yasin Khan ..	17-3	Lakshmipur Madrasa.
	,,	Yasin Mulla ..	20-2	Porsha Madrasa.
	,,	Yunus Ali Mian ..	19-7	Rajshahi Madrasa.
	,,	Zachariah Mulla ..	17-5	Hooghly Madrasa.
	,,	Zahiruddin ..	17-3	Hazrabari Madrasa.
	,,	Zahiruddin Sarkar	17-1	Rajshahi Madrasa.
	,,	Zakurul Haq ..	18-7	Kazdia Madrasa.
	,,	Zainul Abidin ..	16-7	Lakshmipur Madrasa.

180	Muhammad Zainul Abidin Mian	15-11	Abdur Rub Madrasa.
	Muhammadullah Khan ..	15-10	Nuria Madrasa, Chandpur.
	Muhiuddin Ahmad ..	20-11	Ghorasal Madrasa.
	,, Ahmad ..	20-0	Abdur Rub Madrasa.
	Muizuddin Ahmad Khan ..	17-8	Yusufia Madrasa.
	Muktidsur Rahman ..	15-3	Abdur Rub Madrasa.
	Mustafizur Rahman Taluqdar ..	19-9	Private.
	Mutiur Rahman ..	15-6	Lakshmipur Madrasa.
	Nazir Ahmad ..	15-1	Chittagong Islamic Intermediate College.
	Nur Ahmad Chaudhury ..	15-2	Sitakund Madrasa.
190	,, Muhammad Khan ..	18-1	Dacca Islamic Intermediate College.
	,, Muhammad Mian ..	21-7	Naogaon Co-operative Madrasa.
	Qazi Abdul Khaliq ..	15-7	Nuria Madrasa, Barisal.
	,, Muhammad Sadiquddin ..	18-3	Yusufia Madrasa.
	Reazuddin Ahmad ..	16-2	Bhabta Azizia Madrasa.
	Rusmat Ali ..	16-10	Dacca Islamic Intermediate College.
	Sajjad Ahmad ..	17-9	Hemayet Memorial Madrasa.
	Shabbir Ahmad ..	16-5	Chittagong Islamic Intermediate College.
	Shah Mortuza Ali ..	16-3	Pakundia Madrasa.
	,, Mufizuddin ..	17-3	Rajshahi Madrasa.
200	,, Muhammad Abdus Subhan	16-2	Bogra Central Madrasa.
	,, Muhammad Abu Sayeed ..	19-4	Ditto.
	,, Muhammad Yunus Ali ..	16-6	Hemayet Memorial Madrasa.
	Shaikh Abdur Rahman ..	15-7	Bhabta Azizia Madrasa.
	,, Ahmad Khan ..	16-7	Sitakund Madrasa.
	,, Muhammad Akhtar Husain ..	17-3	Gaibandha Madrasa.
	,, Muhammad Muhiuddin	19-1	Jangipur Madrasa.
	,, Muhammad Musa ..	16-0	Furfura Madrasa.
	,, Muhammad Muslim ..	17-9	Private.
	,, Muhammad Nurul Hussain ..	16-0	Koundia Madrasa.
210	,, Muhiuddin ..	18-3	Private.
	Shamsul Haq ..	18-10	Lakshmipur Madrasa.
	Shujauddin Ahmad ..	15-8	Ditto.
	Sirajul Haq Khan ..	17-6	Nuria Madrasa, Chandpur.
	,, Haq Mian ..	16-8	Ditto.
	Sulaiman Ahmad ..	15-3	Ghorasal Madrasa.
	Sultan Ahmad ..	15-3	Ditto.
	,, Ahmad Khan ..	16-1	Lakshmipur Madrasa.
	Syed Ahmadullah ..	16-1	Hussainia Madrasa.
	,, Ali Reza ..	17-11	Roqea Madrasa.
220	,, Muhammad Hasan Mian	17-11	Nuria Madrasa, Barisal.
	,, Waliullah ..	20-10	Dacca Islamic Intermediate College.
	Tafsirur Rahman Khan ..	17-7	Porsha Madrasa.
	Tajul Islam Muhammad Abul Masum ..	18-3	Private.
224	Wahidur Rahman ..	16-0	Chittagong Islamic Intermpdiate College.

THIRD DIVISION.

(In alphabetical order.)

	Abdul Halim ..	19-5	Hammadia Madrasa.
	,, Malik ..	18-10	Private.
	,, Wajid ..	18-7	Dacca Islamic Intermediate College.
	Abdur Rahman Sarkar ..	21-0	Private.
	Abu Jafar Sardar Muhammad Yaqub Ali ..	16-6	Nuria Madrasa, Barisal.
	Abul Khair Muhammad Abdul Khaliq ..	16-3	Lakshmipur Madrasa.
	,, Khair Muhammad Iskandar Ali Mulla ..	17-8	Abdur Rub Madrasa.
	,, Khair Muhammad Khabir Husain ..	19-0	Moizuddin Madrasa.
	Afsaruddin Khan ..	15-5	Abdur Rub Madrasa.
10	Ahmad Husain ..	16-2	Yusufia Madrasa.
	,, Subhan ..	18-11	Chittagong Islamic Intermediate College.
	Ali Ahmad ..	17-6	Ahmadia Madrasa.
	Ansaruddin Ahmad ..	17-1	Pakundia Madrasa.
	Biswas Muhammad Yaqub Ali	22-6	Kazdia Madrasa.
	Habibur Rahman ..	18-8	Roqea Madrasa.
	Khabiruddin Ahmad ..	19-0	Hemayet Memorial Madrasa.
	Lihazuddin Mirdha ..	21-0	Private.
	Maqbul Ahmad Chaudhury ..	17-0	Sitakund Madrasa.
	Muhammad Abdul Alim Mian ..	19-10	Private.
20	,, Abdul Aziz ..	19-9	Ditto.
	,, Abdul Ghani, I ..	16-9	Meher Shah Basti Madrasa.
	,, Abdul Khaliq ..	19-0	Abdur Rub Madrasa.
	,, Abdul Majid ..	17-9	Hooghly Madrasa.
	,, Abdul Majid Bhuiyan ..	16-6	Pakundia Madrasa.
	,, Abdul Quadir Khan ..	20-10	Private.
	,, Abdullah ..	17-10	Hammadia Madrasa.
	,, Abdur Rahim ..	17-1	Haragach Madrasa.
	,, Abdur Rahman ..	17-2	Hazrabari Madrasa.
	,, Abdur Razzaq ..	16-5	Magura Abdul Ghani Madrasa.

30	Muhammad Abdus Sabur Khan	15-11	Chittagong Islamic Intermediate College.
	,, Aftabuddin ..	22-2	Private.
	,, Ahad Ali ..	19-0	Ditto.
	,, Akamuddin ..	17-11	Kazdia Madrasa.
	,, Amiruddin ..	19-1	Private.
	,, Ayezuddin ..	21-9	Ditto.
	,, Azizullah ..	15-3	Lakshmipur Madrasa.
	,, Gawhar Ali Shaikh	18-0	Kazdia Madrasa.
	,, Ghulam Mustafa ..	21-1	Serajganj Islamic Intermediate College.
	,, Irshad Husain ..	16-1	Dacca Islamic Intermediate College.
40	,, Ismail Husain ..	19-6	Yusufia Madrasa.
	,, Jabid Ali Khan ..	20-1	Serajganj Islamic Intermediate College.
	,, Jaffar ..	16-2	Meher Shah Rasti Madrasa.
	,, Kafiluddin Shariff ..	21-9	Private.
	,, Keramat Ali ..	15-0	Nuria Madrasa, Barisal
	,, Khalilur Rahman ..	15-6	Yusufia Madrasa.
	,, Lutful Haq ..	17-10	Ditto.
	,, Mirasuddin Taluqdar ..	21-4	Private.
	,, Mujibul Haq ..	15-0	Dacca Islamic Intermediate College.
	,, Mujibur Rahman Khundkar ..	17-9	Private.
50	,, Mutiur Rahman ..	22-3	Ditto.
	,, Qasid Ali ..	17-0	Jangipur Madrasa.
	,, Quasimuddin Khan	18-4	Rajshahi Madrasa.
	,, Raisuddin Taluqdar ..	20-1	Pakundia Madrasa.
	,, Reazuddin ..	17-5	Private.
	,, Sirajuddin Khan ..	18-2	Mo zudd n Madrasa.
	,, Sulaiman Mandal ..	19-7	Porsha Madrasa.
	,, Sultan ..	17-1	Hemayet Memorial Madrasa.
	,, Tabarakullah ..	21-5	Private.
	,, Tayibur Rahman Khan ..	18 4	Nuria Madrasa, Chandpur.
60	,, Ubaidul Haq ..	16-9	Chittagong Islam a Intermediate College.
	Mulla Yakub Ali ..	17 4	Kazdia Madrasa.
	Mumtazuddin ..	17-2	Ahmad a Madrasa.
	Qazi Muhammad Abdur Rah.m	15-3	Magura Abdul Ghani Madrasa.
	,, Muhammad Jas.muddin ..	23-2	Pr vate.
	Shaikh Sanaullah ..	17-8	Yusufia Madrasa.
	Shamsul Munir Ali Ashraf Chaudhury ..	16-2	Ch ttagong Islam.c Intermediate College.
	Shamsuddin Ahmad ..	20-2	Hemayet Memorial Madrasa.
	Sikandar Ahmad ..	20-7	Chittagong Islamic Intermediate College.
	Syed Noor Muhammad ..	15-0	Yusufia Madrasa.
70	Vilayat Husain ..	21-0	Private.
71	,, Husain Khan ..	16-1	Dacca Islamic Intermediate College.

The undermentioned candidates are declared to have passed the High Madrasa Examination, 1936, in English and Mathematics only :—

	Abu Nayim Muhammad Ismail Husain ..	21-0	Private.
	Muhammad Bashiruddin Ahmad	22-9	Ditto.
	,, Kamel ..	17-3	Ditto.
4	Zahurul Haq Muhammad Muhiuddin ..	17-2	Ditto.

The undermentioned candidates are declared to have passed the Intermediate Examination in Group A (Arts), 1936 :—

[The letter affixed to the name of a candidate indicates that he has obtained not less than four-fifths of the marks in the subject :—

1 indicates Classical Language.]

FIRST DIVISION.

(In order of merit.)

1	Som, Lily	..	Eden Intermediate College.
2	Mukhopadhyay, Bharatlakshmi	..	Ditto.
	Syed Qamarul Ahsan	..	Dacca Intermediate College.
4	Sen, Mallika	..	Kamrunnessa Intermediate College.
5	Basak, Basudeb (1)	..	Dacca Intermediate College.
6	Nurjehan Begum	..	Eden Intermediate College
7	Mukhopadhyay, Sushilranjan	..	Dacca Intermediate College.
8	De, Bhupendrachandra	..	Jagannath Intermediate College.
9	Chakrabarti, Prakashchandra	..	Dacca Intermediate College.
10	Das, Kanakrekha	..	Eden Intermediate College.
11	Khwaja Muhammad Kaiser	..	Dacca Intermediate College.
12	Dasgupta, Kamala	..	Kamrunnessa Intermediate College.
13	Ray, Sobhana	..	Ditto.
14	Muhammad Ahsanullah	..	Dacca Intermediate College.
15	Datta, Himalendu	..	Jagannath Intermediate College.
16	Mukhopadhyay, Kalıranjan	..	Ditto.
17	Chakrabarti, Amarendrakisor	..	Ditto.
	Dhar, Renuka	..	Kamrunnessa Intermediate College.
19	Saha, Jajneswar	..	Imperial Salimullah Intermediate College.

20	Mukhopadhyay, Santoshchandra ..	Jagannath Intermediate College.
21	Sengupta, Anima ..	Private.
22	Sil, Narendrakumar ..	Jagannath Intermediate College.
23	Basak, Balaram ..	Dacca Intermediate College.
24	Gangopadhyay, Surathnath ..	Jagannath Intermediate College.
25	Sen, Lila ..	Eden Intermediate College.
26	Bandyopadhyay, Parimalkumar ..	Jagannath Intermediate College.
27	Basu, Anupama ..	Eden Intermediate College.
	Nath, Manorama ..	Ditto.
29	Abul Khair Muhammad Faiz ..	Dacca Intermediate College.
	Muhammad Ifazuddin ..	Ditto.
31	Sarkar, Sisirkumar ..	Jagannath Intermediate College.
32	Goswami, Satadal ..	Dacca Intermediate College.
33	Basu, Sobhana ..	Kamrunnessa Intermediate College.
34	Chakrabarti, Arunkiran ..	Jagannath Intermediate College.
35	Shamsuddin Ahmad ..	Dacca Intermediate College.
36	Mukhopadhyay, Jagadishchandra ..	Ditto.
37	Muhammad Reza ..	Ditto.
38	Basak, Tarakanta ..	Jagannath Intermediate College.
	Muhammad Rajab Ali ..	Ditto.
40	Azizar Rahaman Mallick ..	Dacca Intermediate College.
41	Sen, Basanti ..	Kamrunnessa Intermediate College.
42	Bhattacharyya, Susilranjan ..	Imperial Salimullah Intermediate College.
43	Datta, Hemkuntala ..	Private.
44	Basu, Nikhilcharan ..	Dacca Intermediate College.
	Gupta, Uma ..	Eden Intermediate College.
46	Guha, Anilkumar ..	Jagannath Intermediate College.
47	Chaudhuri, Nibedita, I ..	Kamrunnessa Intermediate College.
48	Muhammad Abu Siddique ..	Dacca Intermediate College.
	Sirajul Haq Muhammad Abdul Khaliq	Ditto.
50	Das, Sukritikumar ..	Ditto.
51	Sen, Arunkumar ..	Ditto.

SECOND DIVISION.

(In alphabetical order.)

	Abdul Goffur ..	Imperial Salimullah Intermediate College.
	,, Quddus Akhand ..	Ditto.
	Abul Hashem ..	Dacca Intermediate College.
	Abul Hasnat Muhammad ..	Imperial Salimullah Intermediate College.
	,, Kalam Muhammad Abdul Karim ..	Dacca Intermediate College.
	,, Khair Muhammad Shamsuddin	Imperial Salimullah Intermediate College.
	,, Muzaffar Mujibul Haq ..	Jagannath Intermediate College.
	Ahmadullah ..	Ditto.
	Akramuddin Ahmad ..	Dacca Intermediate College.
10	Amanat Zaman Khan ..	Ditto.
	Aminuddin Khan ..	Imperial Salimullah Intermediate College.
	Bandyopadhyay, Bhabatosh ..	Dacca Intermediate College.
	,, Nirmalchandra ..	Ditto.
	,, Suprabha ..	Eden Intermediate College.
	Bardhan, Rasbihari ..	Jagannath Intermediate College.
	Basak, Meghnarayan ..	Ditto.
	Basu, Anilkumar ..	Ditto.
	,, Chittaranjan ..	Ditto.
	,, Nilima ..	Kamrunnessa Intermediate College.
20	,, Sachindranath ..	Dacca Intermediate College.
	,, Sarama ..	Eden Intermediate College.
	,, Sulekha	Ditto.
	Bhattacharyya, Mukundanarayan	Dacca Intermediate College.
	Biswas, Matilal ..	Jagannath Intermediate College.
	Chakrabarti, Ajitkumar ..	Non-collegiate.
	,, Indubhushan ..	Dacca Intermediate College.
	,, Nishikanta ..	Private.
	,, Sudhirchandra ..	Jagannath Intermediate College.
	Chattopadhyay, Balaramchandra ..	Ditto.
30	,, Narayanchandra	Ditto.
	Chaudhuri, Nibedita, II ..	Kamrunnessa Intermediate College.
	Das, Rebatmohan ..	Imperial Salimullah Intermediate College.
	,, Satchidananda	Ditto.
	Dassarma, Jibankrishna ..	Jagannath Intermediate College.
	Datta, Bhawaniprosad ..	Dacca Intermediate College.
	,, Shorashipada ..	Jagannath Intermediate College.
	,, Sova ..	Eden Intermediate College.
	,, Supriti ..	Kamrunnessa Intermediate College.
	De, Jyotishchandra ..	Private.
40	,, Madhusudan ..	Dacca Intermediate College.
	,, Pareschandra ..	Imperial Salimullah Intermediate College.
	Debi, Uma ..	Eden Intermediate College.
	Gangopadhyay, Susilkumar ..	Jagannath Intermediate College.
	Ghazi Muhammad Shamsul Alam ..	Dacca Intermediate College.
	Ghiyasuddin Ahmad ..	Ditto.
	Ghosh, Chinmaykumar ..	Jagannath Intermediate College.
	,, Parul ..	Private.
	Ghoshal, Jitendrachandra ..	Dacca Intermediate College.
	Goswami, Nagendrachandra ..	Jagannath Intermediate College.
50	Guha, Kanak ..	Kamrunnessa Intermediate College.
	,, Priyabala ..	Private.
	,, Sabita ..	Kamrunnessa Intermediate College.
	,, Santiranjan ..	Jagannath Intermediate College.

	Gupta, Hashi	..	Kamrunnessa Intermediate College.
	,, Sabitri	..	Ditto.
	Inadatullah	..	Dacca Intermediate College.
	Kabiruddin Ahmad	..	Ditto.
	Majumdar, Maya	..	Eden Intermediate College.
	Mantasarul Islam	..	Dacca Intermediate College.
60	Mirza Murtaza Ali	..	Imperial Salimullah Intermediate College.
	Mitra, Priyatosh	..	Dacca Intermediate College.
	,, Sunilkumar	..	Ditto.
	Mosharef Hossain Talukdar	..	Imperial Salimullah Intermediate College.
	Mozaffaruddin Ahmad	..	Ditto.
	Muhammad Abdul Hakim	..	Dacca Intermediate College.
	,, Akhtaruddin	..	Ditto.
	,, Ali	..	Ditto.
	,, Husain, I	..	Imperial Salimullah Intermediate College.
	,, Jabbar Ali	..	Dacca Intermediate College.
70	,, Monju Miah	..	Imperial Salimullah Intermediate College.
	,, Mannu Miah	..	Dacca Intermediate College.
	,, Shahjahan	..	Ditto.
	Nag, Bhupendrachandra	..	Ditto.
	,, Birendrakumar	..	Imperial Salimullah Intermediate College.
	Nandi, Hariprasanna	..	Ditto.
	Pal, Dhirendranath	..	Jagannath Intermediate College.
	,, Kamalal	..	Imperial Salimullah Intermediate College.
	,, Prabha	..	Private.
	Raichaudhuri, Nikhileswar	..	Imperial Salimullah Intermediate College.
80	,, Saktaprasad	..	Dacca Intermediate College.
	Ruhel Islam	..	Ditto.
	Saha, Bansibadan	..	Jagannath Intermediate College.
	,, Sridamchandra	..	Ditto.
	Sarkar, Sushilchandra	..	Imperial Salimullah Intermediate College.
	Sengupta, Amiyabala	..	Kamrunnessa Intermediate College.
	,, Bhakti	..	Private.
	Sinhapurkayastha, Hirendralal	..	Jagannath Intermediate College.
	Sen, Nanibala	..	Eden Intermediate College.
	Sukladas, Nibaranchandra	..	Dacca Intermediate College.
90	Syed Muazzam Husain	..	Ditto.

THIRD DIVISION.

(In alphabetical order.)

	Abdul Latiff Biswas	..	Dacca Intermediate College.
	,, Motaleb Mian	..	Imperial Salimullah Intermediate College.
	Abul Bashar Muhammad Moinuddin Ahmad Chowdhury	..	Jagannath Intermediate College.
	Abul Fazal Muhammad Musa	..	Dacca Intermediate College.
	,, Hashem Khan	..	Ditto.
	,, Kasem Khan	..	Ditto.
	,, Munir Fazul Basit	..	Ditto.
	Aminul Islam Chaudhury	..	Jagannath Intermediate College.
	Ashrafuddin Ahmad	..	Non-collegiate.
10	Bandyopadhyay, Kamalendunarayan	..	Dacca Intermediate College.
	Basu, Bakul	..	Kamrunnessa Intermediate College.
	,, Jnanendramohan	..	Dacca Intermediate College.
	Bhattacharyya, Bireschandra	..	Jagannath Intermediate College.
	Bhaumik, Sukhendranath	..	Ditto.
	Das, Bhupendrachandra	..	Ditto.
	,, Jyotirindranath	..	Ditto.
	,, Ramendranath	..	Ditto.
	Datta, Sashimohan	..	Imperial Salimullah Intermediate College.
	Dattabanik, Nanigopal	..	Jagannath Intermediate College.
20	Dattagupta, Birendraprasad	..	Ditto.
	De, Sasankamohan	..	Ditto.
	,, Susilkumar	..	Dacca Intermediate College.
	Gangopadhyay, Madanmohan	..	Private.
	Goswami, Gayanath	..	Jagannath Intermediate College.
	Hafizuddin Ahmad	..	Ditto.
	Ibrahim Molla	..	Imperial Salimullah Intermediate College.
	Kafiluddin Ahmad	..	Ditto.
	Khondkar Muhammad Maslehuddin		Ditto.
	Majumdar, Satyabrata	..	Non-collegiate.
30	Muhammad Abdul Latif Bhuian	..	Imperial Salimullah Intermediate College.
	,, Abdul Malek	..	Ditto.
	,, Abdul Sattar Miah	..	Dacca Intermediate College.
	,, Abdur Rahman Miah	..	Imperial Salimullah Intermediate College.
	,, Fazlur Rahman Mian	..	Dacca Intermediate College.
	,, Fazlur Rahman Bhuiyan		Imperial Salimullah Intermediate College.
	,, Golam Hussain	..	Dacca Intermediate College.
	,, Mazharul Islam	..	Ditto.
	,, Shujaat Ali Khan	..	Ditto.
	,, Yasin	..	Imperial Salimullah Intermediate College.
	Nurul Islam	..	Dacca Intermediate College.
	Pal, Debendrakisor	..	Jagannath Intermediate College.
	Poddar, Radhagovinda	..	Non-collegiate.
	Qazi Abdul Alim	..	Dacca Intermediate College.
	Sen, Ashima	..	Non-collegiate.
	Sengupta, Priyanath	..	Imperial Salimullah Intermediate College.
	,, Saileschandra	..	Ditto.
	,, Surama	..	Private.

	Senraichaudhuri, Subodhchandra	.. Non-collegiate.
	Shah Muhammad Ibrahim	.. Dacca Intermediate College.
50	Shamsul Huda	.. Ditto.
	Sirajuddin Ahmad	.. Imperial Salimullah Intermediate College.
	Som, Mrinmayee	.. Kamrunnessa Intermediate College.
	Syed Lotifur Rahman	.. Dacca Intermediate College.
54	„ Rahman Ali	.. Jagannath Intermediate College.

The undermentioned candidates are declared to have passed the Intermediate Examination in Group B (Science) 1936 :—

[The asterisk prefixed to the name of a candidate indicates that he has obtained not less than three-fourths of the aggregate number of marks ; and the letter or letters affixed to the name of a candidate indicate that he has obtained not less than four-fifths of the marks in the subject or subjects :—

M indicates Mathematics.
Ph. „ Physics.
Ch. „ Chemistry.
G „ Geography.]

FIRST DIVISION.

(In order of merit.)

1	*Guha, Dalimkumar (Ch. M. Ph. G.)	.. Dacca Intermediate College.
2	Gupta, Binayranjan (Ph.)	.. Jagannath Intermediate College.
3	Chaudhuri, Brojendrakishore (Ph.)	.. Dacca Intermediate College.
4	Basu, Sunilkumar (Ch.)	.. Jagannath Intermediate College.
5	Basu, Birendranath	.. Dacca Intermediate College.
6	Pal, Paresnath	.. Jagannath Intermediate College.
7	Nath, Haripada	.. Ditto.
8	Chaudhuri, Manindralal	.. Ditto.
9	Guharai, Upendranath	.. Ditto.
10	Poddar, Dwijendralal	.. Dacca Intermediate College.
11	Chakrabarti, Jibananda	.. Jagannath Intermediate College.
12	A B. Muhammad Serajul Huq Khan	Ditto.
13	Sengupta, Amalendu	.. Dacca Intermediate College.
14	Dasgupta, Biswanath	.. Jagannath Intermediate College.
15	Rakshit, Sudhirchandra	.. Dacca Intermediate College.
16	Chakrabarti, Himansusekhar	.. Ditto.
17	Das, Ashitkumar	.. Ditto.
18	Arfanuddin Ahmad	.. Ditto.
19	Bhattacharyya, Dhirendrakisore	.. Jagannath Intermediate College.
20	Muhammad Afsaruddin Bepari	.. Ditto.
	Mukhopadhyay, Kalipada	.. Ditto.
22	Guha, Samarendrakumar	Ditto.
23	Basuraichaudhuri, Pranabkumar	.. Dacca Intermediate College.
24	Gangopadhyay, Rasamaya	.. Ditto.
25	Sengupta, Sukumar	.. Ditto.
26	Datta, Ratiranjan	.. Jagannath Intermediate College.
27	Guha, Dwijendrakisor	.. Ditto.
28	Habibur Rahman, II	.. Dacca Intermediate College.
29	Sarkar, Jyotirindramohan	.. Ditto.
30	Rakshit Nirmalchandra	.. Ditto.
31	Sarkar, Sudhirkumar	.. Ditto.
32	Basu, Sudhiranjan	.. Ditto.
33	Sarkar, Debiprasad	.. Ditto.
34	Habibur Rahman, I	.. Ditto.

SECOND DIVISION.

(In alphabetical order.)

	Abdur Rub	.. Dacca Intermediate College.
	Abu Bashar Abdul Latif	.. Jagannath Intermediate College.
	Adhikari, Subodhchandra	.. Ditto.
	Afazuddin Ahmad	.. Ditto.
	Akmal Mullah	.. Dacca Intermediate College.
	Bandyopadhyay, Nanigopal	.. Ditto.
	„ Nirmalchandra	.. Ditto.
	„ Sushilchandra	.. Ditto.
	„ Umapada	.. Jagannath Intermediate College.
10	Banik, Rashmohan	.. Ditto.
	Basak, Haridas	.. Dacca Intermediate College.
	„ Radhagopal	.. Jagannath Intermediate College.
	Basu, Subinaychandra	.. Dacca Intermediate College.
	Bhaumik, Dwijendrachandra	.. Jagannath Intermediate College.
	Biswas, Nirmalchandra	.. Ditto.
	Chakrabarti, Amalkumar	.. Non-collegiate.
	Chand Miyan	.. Dacca Intermediate College.
	Chaudhuri, Amiyaranjan	.. Ditto.
	*Das, Amiyabhushan	.. Jagannath Intermediate College.
20	„ Jyotishchandra	.. Dacca Intermediate College.
	„ Pramathanath	.. Ditto.
	„ Surendralal	.. Jagannath Intermediate College.
	Dasgupta, Ajitkumar	.. Dacca Intermediate College.
	„ Parimalkumar	Ditto.

	Dattagupta, Rathindrakumar	..	Jagannath Intermediate College.
	Ghosh, Biswanath	..	Non-collegiate.
	,, Dhirendramohan	..	Dacca Intermediate College.
	,, Jatischandra	..	Jagannath Intermediate College.
	,, Keshabchandra	..	Dacca Intermediate College.
30	,, Krishnanarayan	..	Ditto.
	,, Santikumar	..	Ditto.
	Golam Mahmuddin Khandaker	..	Ditto.
	Goswami, Balaichand	..	Jagannath Intermediate College.
	Guha, Khagendramohan	..	Ditto.
	Gupta, Bibhutiranjan	..	Ditto.
	Haldar, Ajitkumar	..	Dacca Intermediate College
	Imtiazuddin Khan	..	Jagannath Intermediate College.
	Kar, Jagadindranath	..	Dacca Intermediate College.
	Kazi Bahauddin Ahmad	..	Ditto
40	Lahiri, Debendranath	..	Jagannath Intermediate College.
	Mehera, Bans Gopal	..	Dacca Intermediate College.
	Muhammad Abdul Aziz	..	Ditto.
	,, Afzal Hossain	..	Ditto.
	,, Imdadul Haq Khan	..	Ditto.
	Muhammadullah	..	Jagannath Intermediate College.
	Mukhopadhyay, Milanbandhu	..	Dacca Intermediate College.
	,, Satyendramohan		Ditto.
	Mutiur Rahman	..	Ditto.
	Naha, Suvenduprasanna	..	Ditto.
50	Niyogi, Jyotishchandra	..	Jagannath Intermediate College.
	Pal, Jyotishchandra	..	Dacca Intermediate College.
	Ray, Bibhutinath	..	Jagannath Intermediate College.
	,, Chittaranjan	..	Ditto.
	Sarkar, Makhanranjan	..	Dacca Intermediate College.
	,, Phanindrabhushan	..	Ditto.
	Sengupta, Keshabchandra	..	Jagannath Intermediate College.
57	,, Sukhendubhushan	..	Ditto.

THIRD DIVISION.

(In alphabetical order.)

	Abu Muhammad Masud	..	Dacca Intermediate College.
	Abul Bashar Qamarul Islam Bhuiyan		Ditto.
	Bandyopadhyay, Jyotirmay	..	Jagannath Intermediate College.
	,, Kanailal	..	Dacca Intermediate College
	Biswas, Swarnakumar	..	Jagannath Intermediate College.
	Chakrabarti, Rameswar	..	Ditto.
	Datta, Parimalkumar	..	Dacca Intermediate College.
	Guha, Sachindramohan	..	Jagannath Intermediate College.
	Mandal, Mahendrachandra	..	Ditto.
10	Muhammad Abdus Sattar Khan	..	Ditto
	,, Rahman Ali	..	Dacca Intermediate College.
	Mukhopadhyay, Subodhchandra	..	Ditto.
	Sarkar, Nareschandra	..	Jagannath Intermediate College.
	Sen, Manindraprasanna	..	Dacca Intermediate College.
15	Sengupta, Baidyanath	..	Non-collegiate.

The undermentioned candidates are declared to have passed the Intermediate Examination in Group C (Islamic Course), 1936 :—

FIRST DIVISION.

(In order of merit.)

1	Muhammad Azizur Rahman	..	Dacca Islamic Intermediate College.
2	Kamaluddin Ahmad	..	Private.
3	Muhammad Ramzan Ali	..	Dacca Islamic Intermediate College.
4	,, Sohrab Mian	..	Ditto.
5	Sultan Ahmad	..	Chittagong Islamic Intermediate College.
6	Khwaja Muhammad Abdul Jalil Khundkar	..	Dacca Islamic Intermediate College.
7	Fakhruddin Ahmad	..	Ditto.
8	Muhammad Abdul Hai	..	Ditto.
9	Khundkar Muhammad Abul Maqsud		Serajganj Islamic Intermediate College.
	Muhammad Waizuddin	..	Dacca Islamic Intermediate College.
11	,, Muhuddin	..	Chittagong Islamic Intermediate College
12	,, Mizanur Rahman	..	Dacca Islamic Intermediate College.
13	,, Riyazul Haq	..	Chittagong Islamic Intermediate College
14	Abul Fazl Muhammad Khadim Husain	..	Dacca Islamic Intermediate College.
15	Muhammad Israil Husain	..	Ditto.
16	,, Sirajul Haq	..	Ditto.
17	Ali Ahmad	..	Chittagong Islamic Intermediate College.
18	Ismat Ali	..	Dacca Islamic Intermediate College.
	Muhammad Mujibul Haq	..	Chittagong Islamic Intermediate College

SECOND DIVISION.

(In alphabetical order.)

	Ana sadiq Muhammad Hamidur Rahman Khan	..	Dacca Islamic Intermediate College.
	Abdul Jalil	..	Ditto.
	,, Malik	..	Ditto.
	Abu Muhammad Shamsuddin	..	Non-collegiate.
	Abul Ashraf Mustayeen Billa	..	Serajganj Islamic Intermediate College.
	,, Bashar Muhammad Sayed Husain	..	Dacca Islamic Intermediate College.
	,, Fazl Muhammad Akram Husain	..	Serajganj Islamic Intermediate College.
	,, Ulama Mir Abdul Awal Khan		Chittagong Islamic Intermediate College.
	Ahmad Abdul Munim	..	Ditto.
10	Asmatullah Patwari	..	Dacca Islamic Intermediate College.
	Diwan Muhammad Hafizuddin	..	Serajganj Islamic Intermediate College.
	Dilawar Husain	..	Chittagong Islamic Intermediate College.
	Khundkar Muhammad Abdul Hamid		Serajganj Islamic Intermediate College.
	Masiruddin Ahmad	..	Ditto.
	Mirza Illahi Newaz Beg	..	Dacca Islamic Intermediate College.
	Muhammad Abdul Hamid Akand	..	Chittagong Islamic Intermediate College
	,, Abdul Malik	..	Dacca Islamic Intermediate College.
	,, Abdul Quddus	..	Ditto.
	,, Abdur Rahman	..	Ditto.
20	,, Akbar Ali	..	Serajganj Islamic Intermediate College.
	,, Ali Akbar	..	Chittagong Islamic Intermediate College.
	,, Bazlur Rahman Bhuiyan		Dacca Islamic Intermediate College.
	,, Ehsan Ali	..	Private.
	,, Habibur Rahman	..	Dacca Islamic Intermediate College.
	,, Hafizuddin	..	Private.
	,, Ismail	..	Serajganj Islamic Intermediate College.
	,, Maqsudur Rahman	..	Dacca Islamic Intermediate College.
	,, Mubarak Ali	..	Ditto.
	,, Najatullah	..	Serajganj Islamic Intermediate College.
30	,, Raihanuddin	..	Dacca Islamic Intermediate College.
	,, Sirajul Islam, I	..	Serajganj Islamic Intermediate College.
	,, Sirajul Islam, II	..	Ditto.
	,, Ubaidullah	..	Chittagong Islamic Intermediate College.
	,, Usman Ali	..	Private.
	,, Zakatullah	..	Chittagong Islamic Intermediate College.
	Nur Muhammad	..	Dacca Islamic Intermediate College.
	Nurul Islam	..	Non-collegiate.
	Qazi Abul Mansur Rashiduddin Ahmad	..	Dacca Islamic Intermediate College.
	,, Ghulam Rasul		Serajganj Islamic Intermediate College.
40	Shaikh Ahmad Ali	..	Ditto.
	Shamsul Haq	..	Chittagong Islamic Intermediate College.
42	Sikandar Ali	..	Ditto.

THIRD DIVISION.

(In alphabetical order.)

	Abul Bashar	..	Private.
	Ekram Ahmad Chaudhury	..	Ditto.
	Mofizuddin Ahmad	..	Ditto.
	Muhammad Abdul Quddus Mian	..	Ditto.
	,, Abul Qasim Bhuiyan	..	Dacca Islamic Intermediate College.
	,, Tahibur Rahman	..	Non-collegiate.
7	,, Yunus Ali	..	Dacca Islamic Intermediate College.

The undermentioned candidates are declared to have passed the Intermediate Examination in Group D (Dyeing), 1936 :—

FIRST DIVISION.

(In order of merit.)

1	Biswas, Anilbhushan	..	Jagannath Intermediate College.
2	Gupta, Prabhakar	..	Ditto.
3	Gangopadhyay, Sudhindrakisore	..	Ditto.

SECOND DIVISION.

(In alphabetical order.)

	Basak, Jagatbandhu	..	Jagannath Intermediate College.
	Chakrabarti, Subimalchandra	..	Ditto.
	Das, Raicharan	..	Ditto.
	Ghosh, Suchetnath	..	Ditto.
	Maitra, Bimalchandra	..	Ditto.
	Sarkar, Prantosh	..	Ditto.
	,, Ranendranarayan	..	Ditto.
	Sen, Sailendranath	..	Ditto.
9	,, Sujitkumar	..	Ditto.

The undermentioned candidates are declared to have passed the Intermediate Examination in Group E (Commerce), 1936 :—

[The letter or letters affixed to the name of a candidate indicate that he has obtained not less than four-fifths of the marks in the subject or subjects :—

A indicates Commercial Arithmetic.
Bk „ Book-keeping.
Sh „ Shorthand.]

FIRST DIVISION.

(In order of merit.)

1	Sen, Binaygopal (Sh) ..	Jagannath Intermediate College.
2	Majumdar, Anilbandhu (A) ..	Ditto.
3	Biswas, Nripendranath ..	Ditto.
4	Bhattacharyya, Jnanendranath (Sh)	Ditto.
5	Chakrabarti, Asutosh ..	Ditto.
6	Palchaudhuri, Santoshkumar ..	Ditto.
7	Ghosh, Sachindranath ..	Ditto.
8	Basu, Sailendrakumar (Sh) ..	Ditto.
9	Bandyopadhyay, Pratulkanta ..	Ditto.
10	Basak, Nanigopal, II (A Bk) ..	Ditto.

SECOND DIVISION.

(In alphabetical order.)

	Abul Khair Muhammad Zahirul Haq	Jagannath Intermediate College.
	Alfazuddin Ahmad ..	Ditto.
	Basak, Harigopal ..	Ditto.
	Chakrabarti, Dhirendrakumar ..	Ditto.
	„ Nareschandra ..	Ditto.
	Chattopadhyay, Subodhchandra ..	Ditto.
	„ Susilkumar (Sh) ..	Ditto.
	Chaudhuri, Manindrachandra ..	Ditto.
	Das, Gourchandra ..	Ditto.
10	„ Subodhranjan ..	Ditto.
	Datta, Balaram ..	Ditto.
	De, Narendrakrishna ..	Ditto.
	„ Saileschandra ..	Ditto.
	Ghosh, Bidhubhushan ..	Ditto.
	Guhabiswas, Bijaybhushan ..	Ditto.
	Ray, Bhupendraprasad ..	Ditto.
	„ Pijushkanti ..	Ditto.
	Sarkar, Siteschandra ..	Ditto.
	Sen, Prabirchandra (Sh) ..	Ditto.
	Sengupta, Rabindranath ..	Ditto.
21	„ Susilkumar ..	Ditto.

THIRD DIVISION.

(In alphabetical order.)

	Abul Quassaim Mofazzal Hossain Khan.	Jagannath Intermediate College.
	Basak, Nanigopal, I ..	Ditto.
	Chakrabarti, Satyendramohan ..	Ditto.
	Chaudhuri, Bhupendrakumar ..	Ditto.
5	Hafizuddin Molla ..	Ditto.

J. N. ROY, *Secretary (offg.)*.

Board of Intermediate and Secondary Education, Dacca.

Ramna, the 20th June 1936.

NOTIFICATION.

No. 4665.—It is hereby notified for general information that the following candidates having been found guilty of adopting unfair means at the examinations of the Board, held in April 1936, are punished as noted against each :—

Roll No.	Name.	Institution from which sent up.	Examination in which appeared.	Punishment imposed.
277	Amirul Islam ..	Imperial Salimullah Intermediate College.	Intermediate ..	The examination of the candidate for 1936 is scratched and he is debarred from appearing at the two subsequent examinations of the Board to be held in 1937 and 1938.
267	Chintaharan Mitra ..	Ditto ..	High School Examination.	Ditto.
312	Narayanchandra Chakrabarti.	Ukil's Institution ..	Ditto ..	Ditto.

J. N. ROY, *Secretary (offg.)*.

Board of Central Madrasah Examinations, Bengal.

Calcutta, the 30th June 1936.

The undermentioned candidates are declared to have passed the Title (Mumtazul Muhaddisin) Examination of the Board of Central Madrasah Examinations held in April 1936 :—

FIRST DIVISION.

(In order of merit.)

Roll No.	Calcutta Madrasah.
12	Muhammad Jalal Uddin.
17	Abul Kamal Mumajjad Ahmad.
28	Muhammad Mukarram Ali.
10	Abul Kamal Ahmad Hasan Choudhury.
7	Muhammad Ibrahim Ali
25	Muhammad Mahmud Ali.
27	Muhammad Abdul Monim.
13	Haji Muhammad Tufail Ahmad Khan.
16	Abul Ula Muhammad Wajihullah Khan.

SECOND DIVISION.

Calcutta Madrasah.

1 Muhammad Ali.
5 Abul Bashar Sikandar Ahmad.
9 Muhammad Ramiz Ahmad.
11 Muhammad Yusuf.
14 Muhammad Barakatullah.
18 Abul Faiz Tufail Ahmad.
20 Muhammad Saffullah.
21 Muhammad Idris.
22 Abul Fazl Muhammad Mushfiqur Rahman.
23 Abul Fazl Muhammad Sadiq.
24 Muhammad Imamuddin.
26 Muhammad Abdur Razzaq.
30 Muhammad Abdul Hamid.
31 Abul Kalam Muhammad Irshad Alam Khan Pani.
32 Muhammad Noorul Hosain.
33 Asaduzzaman.

Private candidates.

34 Muhammad Yasin.
35 Muhammad Misbahur Rahman.
36 Shah Abul Az'd Muhammad Abdul Bari.
37 Abu Taher Muhammad Shehabuddin Dewan.
38 Abu Numan Muhammad Sulaiman.
39 Abul Majed Muhammad Abdul Wahed.

The undermentioned candidates are declared to have passed the Title (Mumtazul Fuqaha) Examination of the Board of Central Madrasah Examinations, Bengal, held in April 1936 :—

FIRST DIVISION.

(In order of merit.)

Roll No.	Calcutta Madrasah.
40	Khondker Abul Hasanain Muhammad Akhtar Hosain.

SECOND DIVISION.

Calcutta Madrasah.

41 Muhammad Abdul Karim.
42 Abul Bashar Khan Muhammadullah.
43 Muhammad Ashraf Ali.
44 Muhammad Abdul Malik.
46 Muhammad Abdul Jabbar.

The undermentioned candidates are declared to have passed the Fazil (Higher Standard) Examination of the Board of Central Madrasah Examinations, Bengal, held in April 1936, with the group of optional subjects mentioned against their names.

The subjects in which they were examined are detailed below :—

(i) Compulsory Subjects.

1. Hadis.
2. Tafsir.
3. Arabic Poetry.
4. Arabic Prose.
5. Rhetoric and Prosody.
6. Arabic Translation.
7. Muhammadan Law.
8. Principles of Muhammadan Law.
9. Logic.
10. Philosophy.
11. Theology.
12. History of Islam.

(ii) Optional Subjects.

Group A.	Group B.	Group C.
English.	Persian.	English and Urdu.
Group D.	**Group E.**	**Group F.**
Persian and Urdu.	English and Persian.	English, Persian and Urdu.

FIRST DIVISION.

(In order of merit.)

Calcutta Centre.

Roll No.	Calcutta Madrasah.
*26	Abul Muzaffar Gholam Mowla Muhammad Ubaidul Akbar. D.

Chittagong Centre.

Darul Ulum Madrasah, Chittagong.

*252 Muhammad Afzal. D.

Calcutta Centre.

Calcutta Madrasah.

27 Abu Torab Muhammad Jan. D.

Noakhali Centre.

Hamidia Senior Madrasah, Batgram, Tippera.

394 Maqbul Ahmad. D.

Calcutta Centre.

Calcutta Madrasah.

68 Muhammad Najibullah. D.
14 Muhammad Jamil Uddin Allahabadi. D.
34 Abul Khair Muhammad Ayyub Ali. F.

SECOND DIVISION.

Calcutta Centre.

Calcutta Madrasah.

5 Abul Hasan Muhammad Noorul Halim Khondker. D.
6 Abul Mukarram Muhammad Shamsuzzoha. D.
11 Muhammad Serajul Huq. D.
16 Abu Najib Muhammad Noorur Rahman. D.
21 Abul Maali Muhammad Hasan Ali. D.
23 Abul Hasanat Muhammad Saber Uddin. C.
24 Muhammad Shafi Uddin. D.
25 Abul Mun Muhammad Jasim Uddin. C.
33 Muhammad Ubaidul Huq. D.
35 Muhammad Osman Ghani (Section A). C.
37 Mulla Abu Siddiq. C.
39 Muhammad Gholam Ali. F.
40 Syed Bazlur Rahman. F.
41 Shah Abdul Awwal. D.
45 Muhammad Muzaffar-ul Islam. F.
52 Jamal Uddin Ahmad. C.
70 Abul Khair Muhammad Qanaat Hosain. F.
89 Muhammad Abdur Razzaq. F.
95 Abul Kamal Muhammad Safiullah. D.

*Equal.

Private candidate.

Calcutta Madrasah.

Roll No.

101 Abul Amjad Muhammad Noor Ahmad. D.

Dacca Centre.

Madrasah Hammadia, Dacca.

159 Abul Bashar Muhammad Khurshid Mowla. D.
167 Muhammad Najmuddin. D.

Chittagong Centre.

Darul Ulum Madrasah, Chittagong.

253 Abul Muzaffar Syed Abdus Sattar. D.
254 Abu Naim Muhammad Ismail. D.
255 Abul Fazl Shamsuddin Muhammad Islam. D.
257 Abul Kalam Muhammad Shamsul Islam. D.
258 Muhammad Musa D
259 Muhammad Muzaffar Hosain. D.
276 Muhammad Abdur Rauf Chowdhury. C.
284 Abu Naim Muhammad Amin D.

Islamia Madrasah, Feni, Noakhali.

319 Abul Barakat Muhammad Mubarak Ali Bhuiyan. C.

Noakhali Centre.

Madrasah Islamia, Noakhali.

339 Muhammad Dahlur Rahman. D.
340 Abu Nasr Muhammad Shujaatullah. D.
341 Nazir Ahmad. D.
362 Abul Khair Muhammad Omar Ali. D.

Madrasah Karamatia Sonapur, Noakhali.

367 Muhammad Munawwar Uddin. D.
368 Muhammad Sakhawatullah. D.

Abdur Rab Islamia Senior Madrasah, Chaprashirhat, Noakhali.

391 Abul Kalam Muhammad Taj-ul Islam Taj. D.

Barisal Centre.

Madrasah Islamia, Bhola, Barisal.

408 Abul Atiq Muhammad Mujibur Rahman. F.
412 Muhammad Muslim. D
413 Abul Hasan Muhammad Shamsul Huq Koofi. F.

THIRD DIVISION

Calcutta Centre.

Calcutta Madrasah.

3 Abu Saleh Md. Ajmal Uddin Siddiqi. C.
7 Abul Kalam Muhammad Torab Uddin. C.
8 Muhammad Ali Aazam. D.
9 Muhammad Abdul Qadir. D.
12 Noor Ahmad. D
13 Muhammad Faizur Rahman. D.
17 Abun Noor Muhammad Fazlur Rahman. F.
18 Abu Sayeed Muhammad Amir Husain. D.
19 Abul Kalam Muhammad Abdul Qadir Khan B.
20 Muhammad Hafiz Ahmad. D.
31 Muhammad Abdul Khaliq. D.
36 Abu Muhammad Abdullah. F.
38 Abu Numan Muhammad Abdus Subhan. D.
42 Muhammad Abdur Rahman. C.
43 Qazi Abul Maasim. C.
44 Mahabbat Ali Mirza C.
47 Muhammad Abdul Ghani (Section A). D.
48 Abu Naim Muhammad Abdul Hakim Fishani. C.
49 Muhammad Abul Husain. D.
53 Muhammad Abdul Wahhab Nasirabadi. C.
54 Muhammad Sikandar Ali Khalifa. D.
56 Abu Numan Muhammad Abdur Rahman. F.
66 Abul Matir Muhammad Ishaq D.
67 Kaikhusru Syed Abdullah. D
72 Abu Tayyab Muhammad Abdur Razzaq. C.
79 Muhammad Abdul Wahed Khan D
80 Abu Khalid Muhammad Muhibbur Rahman. D.
82 Abul Fazl Muhammad Wajihullah. D.
84 Muhammad Yusuf Ali. F.
87 Abul Kamal Muhammad Rahmatullah. D.
88 Muhammad Raqib Uddin. F.
90 Abul Bashar Muhammad Khalilur Rahman. D.
91 Muhammad Ibrahim C.
94 Muhammad Farid Uddin. D

Private candidates.

Calcutta Madrasah.

102 Muhammad Waliullah Jessori D.
105 Abu Abdullah Ahmad Ali. D.
107 Wajihuddin Ahmad. D.

Madrasah Islamia Fathia Furfura, Hooghly.

109 Abul Bashar Muhammad Enayetullah. C.
110 Abul Hasan Muhammad Abdul Latif. C.
111 Shaikh Md. Abdus Subhan. D.
112 Abul Khair Muhammad Muin Uddin. C.

Islamia Senior Madrasah, Serajgunj, Pabna.

114 Mir Muhammad Musa. F.
115 Muhammad Ismatullah. C.
116 Abu Salim Muhammad Kalam Uddin. F.
117 Muhammad Abdul Quddus. C
118 Shaikh Muhammad Maqbul Hosain. D

Dacca Centre.

Madrasah Hammadia, Dacca.

160 Abu Sayeed Muhammad Musleh Uddin. B.
161 Muhammad Abdur Razzaq. A.
162 Muhammad Abdul Karim. A.
163 Muhammad Ramiz Uddin B.
164 Mir Muhammad Abdul Ahad. D
165 Muhammad Nasimur Rahman. D.
166 Muhammad Fazlur Rahman. D.
168 Muhammad Anwarul Huq Chowdhury. C.
169 Muhammad Ali Bakaul. A.
170 Abul Faiz Muhammad Zainul Abedin. D.
171 Saleh Ahmad. C.
172 Muhammad Omar. C.
176 Daulat Ahmad Bhuiyan. D.

Darul Ulum Senior Madrasah, Dacca.

185 Muhammad Abdul Majid B.
186 Abu Nasr Muhammad Abdul Wahed. B.
187 Sultan Ahmad. B.
188 Qazi Muhammad Abdul Jalil. D.
189 Muhammad Ubaidullah. B.
190 Abul Khair Muhammad Taj Uddin. C.
191 Muhammad Abdul Jalil Bhuiyan. A.
192 Abul Khair Muhammad Abdul Bari. E.
194 Muhammad Idris. B
197 Abul Khair Muhammad Aftab Uddin Khan. C.
198 Abul Bashar Muhammad Zahir Uddin. C.
199 Muhammad Shafi Uddin Nasrabadi. D.

Madrasah Ashraful Ulum, Madhyanagar, Dacca.

202 Abu Nasr Altaf Uddin Ahmad B.
206 Abul Makarim Muhammad Abdul Khaliq. A.
207 Muhammad Abdus Samad. D.
208 Muhammad Serajul Islam. B.

Madrasah Alia, Raipura, Noakhali.

213 Abul Fazl Muhammad Tayyab Ali. B.
214 Muhammad Aminullah. A
216 Abu Tahir Muhammad Abdul Qadir. E.

Darul Ulum Senior Madrasah, Kumradi, Dacca.

223 Abul Fazl Muhammad Ali Chowdhury. A.

Shamsul Ulum Senior Madrasah, Sarrabad, Dacca.

227 Muhammad Abdul Khaliq. D.

Osmania Islamia Senior Madrasah, Puranbazar, Tippera.

234 Abdul Malik. A.
235 Abul Hasanat Muhammad Abdul Halim. B.
236 Abul Fazl Muhammad Abdul Latif. B.

Chittagong Centre.

Darul Ulum Madrasah, Chittagong.

Roll No.

256 Syed Sayeedur Rahman. D.
260 Qazi Muhammad Ruhul Amin. D.
261 Abu Nasr Seraj-ul Islam Muhammad Nazir Sufi. F.
262 Abu Muhammad Muhammad Altafur Rahman. D.
263 Muhammad Siddiqur Rahman. D.
264 Muhammad Abdus Salam. D.
265 Abu Yusuf Muhammad Fazlul Huq. B.
266 Muhammad Abdul Mabud, II. D.
267 Muhammad Shamsul Huda. D.
268 Munir Ahmad Chowdhury. F.
269 Amir Ahmad. D.
270 Abu Zafar Muhammad Abdul Jabbar. D.
271 Abdur Rahman, I. D.
272 Muhammad Rashid Ahmad, III. D.
273 Muhammad Anwarullah. D.
274 Muzakkir Ahmad. D.
275 Muhammad Shafi-ur Rahman. D.
277 Muhammad Abdul Mabud, I. D.
279 Abdul Majid, I. B.
280 Sayeed Ahmad. B.
281 Noor Ahmad. D.
285 Muhammad Abdul Majid, II. D.
287 Muhammad Abdul Khaliq. D.
296 Mir Muhammad Hosain D.
298 Muhammad Abdul Basit. D.
304 Muhammad Dutfur Rahman. C.

Basmuria Ahmadia Madrasah, Sandwip, Noakhali.

312 Muhammad Abdul Mannan. B.

Sitakund Senior Madrasah, Chittagong.

315 Wali Ahmad. D.
316 Muhammad Husain. D.
317 Muhammad Fasih-ul Alam. D.

Islamia Madrasah, Feni, Noakhali.

318 Abul Mansur Muhammad Abdul Ghafoor. D.

Faiz Am Islamia Senior Madrasah, Mithachara, Chittagong.

323 Muhammad Abdul Khaliq. D.
327 Abu Raihan Muhammad Mufizur Rahman. D.

Noakhali Centre.

Madrasah Islamia, Noakhali.

342 Abul Fazl Muhammad Bashirullah. D.
343 Muhammad Muslim. D.
344 Abul Makarim Haris Ahmad. D.
345 Muhammad Abdul Hamid. D.
346 Muhammad Sikandar Ahmad. D.
347 Muhammad Ibrahim. D.
348 Muhammad Abdur Razzaq. D.
349 Ali Ahmad. D.
350 Mansur Ahmad Khan. D.
351 Muhammadullah. D.
353 Muhammad Abdul Bari. D.
359 Muhammad Jalal Ahmad. D.
361 Abul Fazl Muhammad Ishaq. D.
364 Muhammad Muzammilul Huq. D.

Madrasah Karamatia, Sonapur, Noakhali.

369 Muhammad Elahi Bukhsh. A.
370 Muhammad Abdul Qayyum. D.
373 Muhammad Abdul Malek. D.
376 Dalil Uddin Ahmad. D.

Madrasah Karamtia, Bhowanigunj, Noakhali.

382 Muhammad Abdul Awwal. D.
383 Abul Fath Muhammad Sakhawatullah. D.

Abdur Rab Islamia Senior Madrasah, Chaprasirhat, Noakhali.

390 Abu Nasr Tufail Ahmad Akhtar. D.
393 Muhammad Khurshed Alam. D.

Hamidia Senior Madrasah, Batgram, Tippera.

Roll No.

397 Muhammad Ali Asghar. B.

Islamia Senior Madrasah, Basurhat, Noakhali.

398 Noor Muhammad. D.
399 Abul Makarim Muhammad Azharul Islam. D.
400 Abul Hasan Muhammad Fazlur Rahman. D.
401 Abu Zafar Muhammad Sikandar. D.
402 Muhammad Abul Husain. D.

Barisal Centre.

Madrasah Islamia, Bhola, Barisal.

409 Abdul Mannan. D.
410 Abu Salim Muhammad Hashim. D.
411 Muhammad Shafi Uddin. F.
414 Abu Saadat Muhammad Abdur Rashid. D.
415 Abdul Latif. F.
416 Muhammad Hashmatullah, I. D.
417 Abul Makarim Sultan Ahmad. D.
418 Mumtaz Uddin. D.
419 Abu Salim Muhammad Abdul Qadim. C.
433 Syed Abu Zafar Muhammad Abdullah. D.

Sarsina Senior Madrasah, Barisal.

434 Abu Abdullah Muhammad Bashirullah. D.
435 Abul Khair Azhar Uddin Ahmad. F.
436 Abu Jafar Muhammad Yasin. D.
437 Muhammad Abdul Latif, I. D.
438 Muhammad Mazharul Islam. F.
439 Muhammad Sayeedur Rahman. F.
441 Muhammad Abdul Latif, II. F.

Madrasah Karamatia, Bhowanigunj, Noakhali.

450 Muhammad Himayet Uddin. D.

Private candidates.

SECOND DIVISION.

Dacca Centre.

246 Muhammad Israil. B.

THIRD DIVISION.

Calcutta Centre.

127 Syed Abu Nasr Rashid Ahmad. D.
129 Abul Kalam Muhammad Abdus Salam. D.
134 Abul Barakat Muhammad Muhi Uddin. D.
144 Muhammad Abdul Aziz. D.
145 Abul Helal Muhammad Jalal. D.
146 Muhammad Tayyab Uddin. A.
150 Abul Matin Muhammad Amin Uddin. D.
151 Qazi Muhammad Dalil Uddin. D.
155 Muhammad Abdus Subhan Jalalabadi. F.
156 Mufiz Uddin Ahmad. C.
158 Muhammad Gholam Husain. D.

Dacca Centre.

239 Muhammad Janab Ali B.
240 Muhammad Abdus Saboor Khan. B.
241 Hafiz Muhammad Hashmatullah. E.
242 Muhammad Abdul Matin. B.
243 Muhammad Abdul Basir. A.
244 Muhammad Abdul Majid. B.
248 Muhammad Mumtaz Uddin. C.
249 Muhammad Imdadullah Bhuiyan. C.
250 Muhammad Sadiq Ali. B.
251 Muhammad Mehr Uddin. C.

Chittagong Centre.

328 Muhammad Abdul Huq. D.
330 Muhammad Seraj-ul Huq. D.
335 Abu Tahir Muhammad Abdul Majid. B.

Noakhali Centre.

406 Abul Ula Muhammad Abdus Sattar Ashrafi. D.

Barisal Centre.

454 Syed Abul Fazl Muhammad Abdul Jalil Ashrafi. D.

The following candidates are declared to have passed the Fazil (Higher Standard) Examination of the Board of Central Madrasah Examinations, Bengal, held in April 1936, *in English only* :-

Private candidates.

FIRST DIVISION.

(In order of merit.)

Noakhali Centre.

Roll No.		
407	Sultan Ahmad.	

Chittagong Centre.

338	Mazharul Huq.	

The undermentioned candidates are declared to have passed the Alim (Lower Standard) Examination of the Board of Central Madrasah Examinations, Bengal, held in April 1936, with the group of optional subjects mentioned against the names of each candidate.

The subjects in which they were examined are detailed below :-

Compulsory Subjects.

1.	Hadis.	7.	Muhammadan Law.
2.	Tafsir.	8.	Principles of Muhammadan Law.
3.	Arabic Poetry.	9.	Logic.
4.	Arabic Prose.	10.	Philosophy.
5.	Rhetoric and Prosody.	11.	History of Islam.
6.	Arabic Translation and Essay.		

Optional Subjects.

Group A.	Group B.	Group C.
English.	Persian.	English and Urdu.
Group D.	Group E.	Group F.
Persian and Urdu.	English and Persian.	English, Persian and Urdu.

FIRST DIVISION.

(In order of merit.)

Calcutta Centre.

Calcutta Madrasah.

Roll No.		Age on 31st March 1936. Y.	m.
37	Muhammad Saifuddin Yahya. D. ..	16	10
5	Muhammad Abdul Wahhab. D. ..	14	11
3	Muhammad Abdur Rahman. D. ..	14	9

Chittagong Centre.

Islamia Senior Madrasah, Feni, Noakhali.

365	Radhauddin Ahmad. F. ..	14	0

Darul Ulum Madrasah, Chittagong.

279	Abu Tahir Muhammad Nazer. F. ..	14	9
281	Abul Faseeh Muhammad Furqan. D. ..	15	10
282	Helaluddin Ahmad. C. ..	14	9

Calcutta Centre.

Calcutta Madrasah.

4	Khan Muhammad Mustafizur Rahman. F.	13	11

Chittagong Centre.

Darul Ulum Madrasah, Chittagong.

280	Ahmad Saboor. D. ..	14	9

SECOND DIVISION.

Calcutta Centre.

Calcutta Madrasah.

Roll No.		Age on 31st March 1936. Y.	m.
9	Muhammad Shamsul Huda. F. ..	14	1
10	Muhammad Noorul Islam Chowdhury. C.	15	0
26	Noor Uddin Ahmad. F. ..	14	8
27	Syed Jafar Ali. F. ..	18	0
31	Muhammad Shamsul Huq, I. C. ..	20	0
36	Abul Faiz Muhammadullah. D. ..	15	1
41	Syed Muhammad Yunus. C. ..	15	8
46	Muhammad Safiullah. F. ..	16	0
47	Muhammad Afsar Husain. C. ..	14	1

Islamia Senior Madrasah, Serajganj, Pabna.

75	Muhammad Abdul Alim. C. ..	15	1

Dacca Centre.

Madrasah Hammadia, Dacca.

125	Hafiz Abdur Rab. C. ..	17	2
128	Syed Shah Mahmudullah. D. ..	14	2
140	Muhammad Mustafizal Karim. D. ..	17	0

Madrasah Alia, Rajpura, Noakhali.

156	Hafiz Abu Yusuf Muhammad Ahsan Ali. C. ..	18	0

Karlasen Senior Madrasah, Mymensingh.

169	Muhammad Muniruzzaman. C.	16	3
170	Abul Bashar Muhammad Serajul Islam. C. ..	15	11
171	Muhammad Siddiq Hosain Khan. D. ..	16	2
172	Muhammad Muhi Uddin. C. ..	15	1
175	Shah Abu Numan Muhammad Habibur Rahman. D. ..	17	1

Chittagong Centre.

Darul Ulum Madrasah, Chittagong.

283	Abu Numan Muhammad Yusuf. D. ..	17	7
284	Abul Lais Abdur Rahman. C. ..	14	11
285	Abul Moin Muhammad Muhi Uddin. D.	16	9
286	Abdul Majid Arkani, I. D. ..	17	11
287	Abul Fayyaz Muhammad Zobair Ahmad. D. ..	14	1
288	Muhammad Khalilur Rahman. C. ..	19	8
289	Muhammad Badrul Kamal C. ..	15	9
290	Muhammad Abu Bakr. D. ..	14	1
291	Syed Abul Makarim Ahmad Safa. D. ..	15	11
292	Muhammad Athar Ali. D. ..	19	11
293	Abul Majed Muhammad Wajid Ahmad. D. ..	14	0
294	Abul Ula Muhammad Noorul Huq. D.	15	8
295	Jamal Uddin Ahmad. C. ..	14	0
296	Abu Sayed Muhammad Siddiq Ahmad. D.	18	11
297	Abu Jafar Muzaffar Ahmad. D. ..	15	11
298	Muhammad Gholam Bari. C. ..	19	9
299	Abu Muhammad Muhi-ul-Huq. D. ..	14	8
300	Abu Obaid Muhammad Dabirur Rahman. D. ..	15	0
302	Muhammad Abdullah. F. ..	22	9
304	Abu Nayeem Muhammad Abdul Karim. D.	17	9
308	Muhammad Jalal Uddin Maswood. D.	17	0

Sitakund Senior Madrasah, Chittagong.

340	Muhammad Lutful Huq. D. ..	14	2
341	Muhammad Ruhul Amin. D. ..	14	0

Faiz-An Islamia Senior Madrasah, Mithachara, Chittagong.

355	Muhammad Mumtaz Uddin Ahmad. D. ..	16	11

Islamia Senior Madrasah, Feni, Noakhali.

366	Abul Huda Muhammad Dabirur Rahman. D. ..	16	6
367	Abul Asaad Muhammad Rashid Ahmad. D ..	16	0
368	Abul Ula Muhammad Aminullah. D. ..	14	0
369	Mahmud Uddin Ahmad. D. ..	14	10
370	Muhammad Ishaq. D. ..	16	4
372	Ali Ahmad Majmadar. C. ..	14	10

Anwarul Ulum Senior Madrasah, Cheringa, Chittagong.

Roll No.		Age on 31st March 1936. Y.	m.
376	Muhammad Saiful Wadud. F. ..	14	2
377	Muhammad Munir Uddin. D. ..	18	7

Noakhali Centre.

Madrasah Islamia, Noakhali.

423	Abul Kamal Muhammad Abdul Matin. D.	14	1
424	Abu Zia Muhammad Serajul Huq. F. ..	14	4
425	Muhammad Azizullah. D. ..	15	2
426	Muhammad Nazirullah. D. ..	14	2
427	Abul Kamal Muhammad Ali Aazam, II. D.	15	9
429	Muhammad Habibur Rahman. D. ..	14	2
430	Abul Khair Muhammad Bazlul Karim. D.	15	2
432	Abul Irfan Muhammad Abdus Subhan. D.	14	1
433	Abu Daud Muhammad Osman Ghani. D.	14	1
436	Abu Jafar Muhammad Muzaffar Ahmad, II. D.	15	0
438	Muhammad Khalilur Rahman. D. ..	17	9
457	Muhammad Mofazzalul Huq. D. ..	15	4

Madrasah Karamatia, Sonapur, Noakhali.

466	Muhammad Gholam Murtaza. C. ..	14	0
467	Muhammad Jalalul Huq. C. ..	15	9
468	Syed Ahmad, I. C. ..	14	11
469	Muhammad Zainul Abedin, III. D. ..	14	9
470	Abul Fazl Muhammad Maqsud. C. ..	16	0
471	Muhammad Ali Aazam. C. ..	14	0

Abdur Rab Islamia Senior Madrasah, Chaprasirhat, Noakhali.

492	Abul Lais Muhammad Mujibul Huq. D.	17	7
493	Abul Bashar Muhammad Shamsul Huq. D.	17	9
494	Abu Torab Maqbul Ahmad. D. ..	18	4

Hamidia Senior Madrasah, Batgram, Tippera.

508	Abul Kalam Muhammad Abdul Hye. D.	15	6

Faiz Am Senior Madrasah, Farashganj, Noakhali.

517	Mujibur Rahman. D.	16	8

Islamia Senior Madrasah, Basurhat, Noakhali.

534	Abul Wara Muhammad Salamatullah. D.	14	7
535	Abul Makarim Muhammadullah. D. ..	14	9

Barisal Centre.

Islamia Madrasah, Bhola, Barisal.

578	Abu Sayeed Muhammad Habibullah. F.	16	9

Senior Madrasah, Sarsina, Barisal.

584	Muhammad Qasim. F. ..	15	0
585	Abu Tahir Muhammad Abdul Khaliq. C.	14	3

Ahmadia Senior Madrasah, Charcowa, Barisal.

593	Abdul Majid. A.	14	8
599	Abu Tahir Nazir Uddin Ahmad. A. ..	14	11

THIRD DIVISION.

Calcutta Centre.

Calcutta Madrasah.

6	Muhammad Serajul Huq. D. ..	16	1
11	Khondkar Muhammad Moizzuddin. C.	14	9
13	Muhammad Hashmatullah Khan. C. ..	17	1
14	Muhammad Abdul Qadir (Section A). C.	16	9
15	Muhammad Abu Sayeed. C. ..	17	3
16	Abul Khair Muhammad Ifaz Uddin. D.	20	0
17	Abul Anis Muhammad Iman Ali. D. ..	17	9
18	Muhammad Najibul Huq. D. ..	16	9
21	Syed Waselul Huq. C.	14	2
23	Abul Hashim Muhammad Kamal Uddin Khan. C.	17	2
28	Abul Khair Muhammad Bazlur Rahman, I. F.	13	0
29	Abul Mun Muhammad Sikandar. D. ..	21	3
30	Abu Tahir Muhammad Sayeedur Rahman. D.	14	1
33	Muhammad Abul Qasim. C. ..	18	6
39	Muhammad Tawhidullah. C. ..	15	6
43	Muhammad Ibrahim. C.	16	5
49	Muhammad Kalimullah. C. ..	15	8
50	Muhammad Abdul Huq. D. ..	16	7

Private candidates.

Calcutta Madrasah.

51	Abul Khair Muhammad Waheed. C. ..	16	6
54	Muhammad Tahir. D.	17	10
59	Shaikh Nasir Uddin Ahmad. C. ..	15	6
61	Abduzzahir Muhammad Nawazish Ali Jawanpuri. C.	13	9

Madrasah Islamia Fathia Furfura, Hooghly.

64	Muhammadullah. D. ..	17	7

Islamia Senior Madrasah, Sorajganj, Pabna.

66	Muhammad Abdus Sattar Rangpuri. C.	16	1
67	Muhammad Afzal Khan. D. ..	19	5
68	Muhammad Rustam Ali Hadooly. C. ..	16	1
69	Muhammad Irfan Uddin. D. ..	15	7

Dacca Centre.

Madrasah Hammadia, Dacca.

126	Abul Khair Muhammad Tafazzul Hosain. D.	14	2
127	Muhammad Fazlur Rahman. C. ..	17	1
129	Muhammad Saadat Ali. C. ..	14	2
130	Abul Bashar Muhammad Nooruzzaman. C.	14	0
133	Muhammad Fazlul Huq. C. ..	18	1
136	Abul Bashar Muhammad Abdus Sattar. C.	16	9

Darul Ulum Senior Madrasah, Dacca.

147	Muhammad Abdul Latif. A. ..	14	1
148	Abu Yusuf Muhammad Yaqoob. B. ..	17	3

Madrasah Alia, Raipura, Noakhali.

157	Muhammad Laqitullah. B. ..	19	1
158	Abul Khair Muhammad Abdul Ghani. A.	16	8
160	Muhammad Sulaiman. B.	16	8

Katlasen Senior Madrasah, Mymensingh.

173	Abul Khair Mir Muhammad Aftabuddin. D.	16	1
174	Dewan Abul Kalam Muhammad Hosain Siddiqi. C.	15	3
176	Muhammad Aftab Uddin. D. ..	19	1
177	Abul Abeed Muhammad Abdul Quayyum. C.	18	11
178	Abul Farah Muhammad Abed Ali. D. ..	18	4

Madrasah Ashraful Ulum, Madhyanagar, Dacca.

183	Muhammad Siddiqur Rahman. A. ..	15	2
184	Abul Khair Muhammad Abdul Hakim. B.	15	2

Darul Ulum Senior Madrasah, Kumaradi, Dacca.

188	Muhammad Abdur Rahman. A. ..	17	1
189	Muhammad Abdus Samad. A. ..	16	3
190	Muhammad Ziaat Ali Mian. B. ..	20	1
191	Mumtazuddin Ahmad. A. ..	17	1

Osmania Islamia Senior Madrasah, Puranbazar, Tippera.

204	Muhammad Hosain. A.	15	10
205	Muhammad Ali. B.	16	0

Chittagong Centre.

Darul Ulum Madrasah, Chittagong.

Roll No.		Age on 31st March 1936. Y.	m.
301	Muhammad Abul Qasim. B. ..	14	11
303	Muhammad Farid Uddin. A. ..	15	8
305	Abu Jafar Ahmadur Rahman. D. ..	15	3
306	Abul Mukarram Muhammad Karim Buksh. B.	16	11
307	Muhammad Hidayetullah. D. ..	15	8
309	Nazir Ahmad (Arkani). D. ..	15	8
310	Muhammad Imam Sharif. D. ..	14	9
311	Muhammad Noorul Alam. D. ..	18	11
312	Muhammad Abdur Razzaq. D. ..	22	7
313	Tafazzul Hosain Patwari. B. ..	17	8
315	Abul Mohsin Farrukh Ahmad. D. ..	15	11
316	Muhammad Hosain. B.	19	11
317	Muhammad Sayeedul Huq. D. ..	14	0
322	Muhammad Mustafa. D. ..	17	9
325	Muhammad Salamatullah. D. ..	14	9
326	Muhammad Abdul Aziz. D. ..	15	11
339	Qazi Ahmadul Huq. C.	15	10

Sitakund Senior Madrasah, Chittagong.

342	Sayed Muhammad Abdul Mannan, III. D.	14	3
343	Muhammad Abdul Mannan Khan, I. D.	14	6
345	Muhammad Nasrat Ali. D. ..	14	0
348	Kamal Uddin Ahmad. D.	14	0
349	Muhammad Abdul Munim. D. ..	14	9
351	Khurshid Alam. D.	17	2
353	Mujibul Huq. D.	16	0

Faiz Am Islamia Senior Madrasah, Mithachara, Chittagong.

358	Muhammad Muslim. D.	16	5
360	Abul Faiz Muhammad Abdur Razzaq. D.	17	11
364	Muhammad Habibullah. D. ..	18	5

Islamia Senior Madrasah, Feni, Noakhali.

371	Abu Rezwan Muhammadur Rahman. D.	17	6
373	Abul Farah Noor Ahmad Majmuadar. D.	15	9
374	Abul Farah Muhammad Abdul Mannan. D.	15	10

Anwarul Ulum Senior Madrasah, Choringa, Chittagong.

379	Muhammad Anwar Hosain. D. ..	15	2
380	Muhammad Noorul Islam. D. ..	17	5
381	Sayeed Ahmad. D.	17	4
382	Muhammad Mazhar Ahmad. D. ..	16	6

Bashiria Ahmadia Madrasah, Sandwip, Noakhali.

386	Muhammad Madinul Huq Khan. B. ..	16	0
389	Muhammad Abdul Ghani. C. ..	15	0

Islamia Senior Madrasah, Dhamti, Tippera.

393	Muhammad Abdul Jabbar. C. ..	15	9

Latifia Senior Madrasah, Mirsarai, Chittagong.

394	Muhammad Badi-ul Alam Chowdhury. D.	13	11
395	Muhammad Abdus Salam. D. ..	17	1
397	Muhammad Bashirul Huda Chowdhury. D.	17	8

Islamia Senior Madrasah Darogahat, Chittagong.

399	Abuttaqwa Muhammad Ali Akbar. D.	18	0
400	Muhammad Akhtaruzzaman. B. ..	16	0

Noakhali Centre.

Madrasah Islamia, Noakhali.

Roll No.		Age on 31st March 1936. Y.	m.
428	Muhammad Habibullah. D. ..	14	8
431	Muhammad Rafiqullah. D. ..	15	1
435	Abul Bashar Muhammad Noorul Anwar D. ..	14	4
437	Muhammad Abdur Rashid. D. ..	14	6
439	Abu Ula Muhammad Ali Aazam, I. D.	14	0
441	Muhammad Nooruzzaman. D. ..	15	2
442	Muhammad Hosain. D. ..	15	2
443	Muhammad Abdul Majid. C. ..	14	4
444	Muhammad Wali-ullah. C. ..	15	2
445	Sultan Ahmad. D. ..	14	2
446	Muhammadullah. D. ..	16	2
447	Abu Tahir Muhammad Balaghatullah. C. ..	14	7
455	Muzaffar Ahmad, I. D. ..	14	8
461	Muhammad Mukhlesur Rahman. D. ..	15	4

Madrasah Karamatia, Sonapur, Noakhali.

472	Muhammad Abdus Subhan. C. ..	15	11
473	Muhammad Siddiqullah. D. ..	14	6
474	Muhammad Abdur Rashid. C. ..	16	8
477	Qazi Muhammad Shamsul Huq. C. ..	14	9
478	Muhammad Zainul Abedin, II. D. ..	14	9
481	Muhammad Mujibullah. C. ..	16	9
487	Muhammad Gholam Mowla. D. ..	16	0

Abdur Rab Islamia Senior Madrasah, Chaprasirhat, Noakhali.

491	Abul Azad Muhammad Sayed Ahmad. D. ..	16	0
495	Abul Khair Muhammad Abdul Hadi. D. ..	14	11
496	Abu Tahir Muhammad Abdur Razzaq. C. ..	13	9
497	Abul Faiz Muhammad Abdul Wahhab. C. ..	17	0
498	Muhammad Abdul Ghani. D. ..	13	0
501	Abu Bakr Muhammad Sayeedur Rahman. D. ..	20	0

Hamidia Senior Madrasah, Batgram, Tippera.

502	Muhammad Kamelul Huq. D. ..	14	0
504	Hasan Ahmad. D. ..	16	2
505	Muhammad Ali Ahmad. D. ..	15	3
506	Abul Makarim. B. ..	14	3
510	Abu Nasr Amir Hosain. D. ..	15	11

Faiz Am Senior Madrasah, Farashgunj, Noakhali.

514	Abul Khair Muhammad Shamsul Huq. D. ..	14	0

Karamatia Madrasah, Bhowanigunj, Noakhali.

520	Abul Kalam Sayed Ahmad. D. ..	16	9
521	Muhammad Mukhlesur Rahman. D. ..	20	11
525	Abul Irfan Muhammad Moti-ur Rahman. D. ..	14	9
526	Abu Sayeed Muhammad Abdul Hamid. D. ..	14	0
531	Sayed Ahmad. D. ..	16	3

Islamia Senior Madrasah, Basurhat, Noakhali.

533	Muhammad Muzaffar Husain. D. ..	15	9
536	Muhammad Atiqullah. D. ..	16	0
538	Abul Kalam Muhammad Taj-ul Islam Khan. D.	16	2
539	Abul Bashar Muhammad Ubaidul Huq, I. D. ..	15	3
540	Abu Torab Muhammad Ebadul Huq. D. ..	16	3
551	Abul Mubarak Muhammad Ubaidul Huq, II. D. ..	17	5

Bashiria Ahmadia Madrasah, Sandwip, Noakhali.

Roll No.		Age on 31st March 1936. Y.	m.
555	Syed Abul Khair Muhammad Siddiq. D.	16	4
557	Abul Bashar Sultan Ahmad Mulla. D.	16	3

Barisal Centre.

Islamia Madrasah, Bhola, Barisal.

570	Abul Faqih Muhammad Gheyasuddin. D. ..	17	1
571	Abu Nasr Muhammad Najibul Hosain *alias* Buzurg Ali Mian. D. ..	21	11
572	Abu Sadiq Muhammad Jalal Uddin. C.	18	1
574	Abul Kalam Muhammad Manzel Uddin. C. ..	19	11
575	Abul Hasan Muhammad Irfan Uddin. D. ..	17	1
577	Abul Musharraf Muhammad Ahsan Uddin. D. ..	20	9
579	Muhammad Aziz Uddin. C. ..	17	0
580	Muhammad Abdur Rahman. C.	16	9
583	Abul Musharraf Muhammad Shamsuddin Bhuiyan. C. ..	18	2

Senior Madrasah, Sarsina, Barisal.

586	Abul Kalam Muhammad Amjad Hosain. F. ..	15	0
587	Muhammad Zainul Abedin. D. ..	16	1
588	Muhammad Abdul Hakim. D. ..	17	0
589	Syed Tajammul Hosain. F. ..	15	1
590	Abul Khair Muhammad Abdul Wahhab. D. ..	14	9
591	Muhammad Abdur Rashid. D. ..	17	0
592	Muhammad Sulaiman. D. ..	15	2

Ahmadia Senior Madrasah, Charcowa, Barisal.

594	Muhammad Zainul Abedin. D. ..	16	6
598	Muhammad Irfan Uddin Mian. D. ..	16	1
600	Muhammad Mufizur Rahman. D. ..	17	3

Karamatia Madrasah, Bhowanigunj, Noakhali.

603	Abul Bashar Maqbul Ahmad. F. ..	15	1

Private candidates.

SECOND DIVISION.

Calcutta Centre.

99	Abu Ishaq Muhammad Imdadul Huq. D.	14	3
100	Abur Rezwan Muhammad Bazlur Rahman. C. ..	16	8
102	Muhammad Abul Hosain. D. ..	15	6

Dacca Centre.

218	Abul Fazl Muhammad Abdur Rahman. B. ..	16	7
252	Muhammad Gholam Shahid. A. ..	15	3
258	Muhammad Mahtab Uddin. B. ..	15	1

Chittagong Centre.

401	Muhammad Neyaz Ahmad. D. ..	15	8
402	Qubad Ahmad. D. ..	19	10
421	Abdur Rahman. C. ..	14	10

THIRD DIVISION.

Calcutta Centre.

Roll No.		Age on 31st March 1936. Y.	m.
84	Muhammad Abdus Salam Khondkar. C.	15	7
93	Abu Sayeed Muhammad Atiqullah Khan. D. ..	17	10
94	Abul Fazl Muhammad Fazlul Huq. D.	13	3
95	Abul Ula Muhammad Noorullah. D.	13	7
96	Abu Nasr Muhammad Mansoor Ahmad. D. ..	15	11
98	Abu Bakr Muhammad Ishaq. D. ..	16	3
101	Abul Fath Muhammad Yusuf Ali. C. ..	17	3
104	Abul Ishfaq Muhammad Ishaq. D. ..	16	9
105	Abu Numan Muhammad Ahmadur Rahman Islamabadi. D. ..	14	3
107	Abush Shams Muhammad Noorul Huq. D. ..	14	2
108	Abun Noor Muhammad Usman Ghani. D. ..	17	3
109	Abu Maswood Muhammadur Rahman. D.	15	3
110	Abul Khair Muhammad Abdul Qadir. C.	14	0
111	Muhammad Habibur Rahman. C. ..	17	9
112	Gul Muhammad. D. ..	18	2
115	Muhammad Mujibur Rahman. D. ..	17	10
116	Muhammad Muslim Uddin. D. ..	16	1
118	Muhammad Noor Uddin. C. ..	17	1
119	Muhammad Moizz-u-ddin. D. ..	17	0
120	Muhammad Rustam Ali. C. ..	23	9
121	Abul Barakat Ahmad Ali. C. ..	13	0
123	Muhammad Abul Moshim. D. ..	17	8

Dacca Centre.

227	Abu Numan Muhammad Fazlur Rahman. B. ..	14	0
229	Abul Amin Muhammad Hafeez Uddin. B.	14	4
236	Abul Hasan Muhammad Sayeed Uddin. A. ..	15	3
237	Muhammad Shamsul Huq Bhuiyan. C.	14	2
238	Muhammad Amir Husain Sardar. A.	14	5
239	Muhammad Yusuf Mian. B. ..	16	7
242	Muhammad Saiful Huq. B. ..	18	1
247	Abul Makarim Muhammad Abdul Mannan. B. ..	15	8
253	Abul Khair Muhammad Yusuf Ali. B.	17	2
254	Muhammad Mehrullah. A. ..	15	2
255	Abut Tayyab Muhammad Akbar Hosain. B. ..	15	2
256	Abul Muzaffar Muhammad Haidar Ali. B. ..	20	2
257	Ahmad Hosain. A. ..	16	1
260	Abul Qasim Ahmad Ali. A. ..	18	0
261	Muhammad Abdul Jabbar Mir. A. ..	18	2
262	Muhammad Aminullah. A. ..	15	0
263	Muhammad Abdul Hye. B. ..	16	1
266	Abdul Hamid Khan. B. ..	15	0
274	Abul Fath Serajul Alam Muhammad Faiz Ahmad. A. ..	17	1

Chittagong Centre.

404	Muhammad Ishaq. D. ..	19	5
405	Muhammad Shaikh Ahmad. B. ..	18	2
406	Muhammad Ali Akbar. D. ..	16	1
422	Muhammad Danesh. A. ..	18	8

Noakhali Centre.

561	Abul Hasanat Muhammad Ahsanullah. F. ..	14	1
568	Muhammad Sharafatullah. B. ..	19	11

Barisal Centre.

605	Abul Faiz Muhammad Aftab Hosain. D.	14	3
606	Muhammad Abdul Jabbar. C. ..	14	0
607	Muhammad Amiuddin. D. ..	15	0
608	Muhammad Mahawat Hosain. D. ..	14	0
609	Haji Muhammad Abdul Hamid. D. ..	19	11
611	Muhammad Ishaq Farraji. D. ..	16	9

M. MUSA,

Registrar, Board of Central Madrasah Examinations, Bengal, and Principal, Calcutta Madrasah.

Results of the Government Commercial Course Final Examination, 1936.

Calcutta, the 19th June 1936.

The following candidates have passed the Final Examination in the compulsory subjects and in the optional subject or subjects noted against each :—

(Arranged in order of roll number.)

Government Commercial Institute, Calcutta.

Roll No.		
1	Priya Ranjan Das Gupta.	
3	Narendra Nath Sen.	
4	Prafulla Chandra Kundu.	
6	Aj t Maitra.	
8	Nihar Ranjan Chakravorty.	
11	Pashupati Kumar ..	.. Shorthand (80 words per minute). Typewriting (35 words per minute).
12	Hrishikesh Basak.	
13	Ab nash Chandra Mitra	.. Typewriting (45 words per minute).
14	Sudhansu Sekhar Bhadury.	
16	Amarendra Nath Gangopadhyaya.	
17	Paritosh Chandra Ghose.	
18	Santosh Kumar Banerjee	.. Typewriting (40 words per minute).
19	Anil Kumar Majumdar.	
20	Subodh Chandra Ghosal.	
21	Prafulla Kumar Dutta.	
22	Bhaba Nando Roy Chowdhury	.. Typewrit ng (35 words per minute).
23	Manasha Charan Gangopadhoaya.	
24	Abi Bhusan Bandyopadhyaya	.. Shorthand (100 words per minute).
25	Amulya Chandra Mukherji.	
26	Profulla Chandra Aich.	
27	Sailendra Nath Nandy.	
28	Sankar Lall Ghose.	
29	Anadi Gopal Mukherjee.	
31	Biswa Nath Sarkar	.. Shorthand (80 words per minute). Typewriting (35 words per minute).
33	Barendra Nath Mitra.	
36	N rmal Chattopadhyay.	
37	Jyotish Chandra Pal.	
39	Arun Kumar Ghosh	.. Typewriting (30 words per minute).
40	Sudhangshu Kumar Banerjee.	
42	Krishna Dhan Dey	.. Typewriting (30 words per minute).
43	Mano Mohan Mukhopadhya.	
44	Kartic Chandra Mukhopadhyay	.. Typewriting (30 words per minute).
45	Harsha Nath Saha.	
46	Rabindra Nath Banerjee	.. Typewriting (35 words per minute).
48	Rudra Pratap Singh.	
49	Debjibon Banerji.	
50	Hr doy Mohan Banerjee.	
51	Ratan Lal Bakliwal	.. Typewriting (35 words per minute).
52	Sunil K. Biswas	.. Typewriting (40 words per minute).
53	Ram Chander Rai Sexena.	
55	Sunith Kumar De.	
57	Anil Chandra Dutta.	
58	Prafulla Kumer Paul.	
59	Nani Bhusan Biswas	.. Typewriting (30 words per minute).
60	Benoyendra Kumar Banerji.	
62	Nagendra Nath Chattopadhyay	.. Shorthand (80 words per minute). Typewriting (35 words per minute).
63	Sankar Charan Chatterji.	
64	Ratan Curshedji Parakh.	
65	Barendra Krishna Mull ck.	
66	Saurendra Mohan Majumdar.	
68	Ramesh Chandra Chatterjee.	
71	Sankari Prosad Bhattacharya.	
72	Tinkari De Sircar	.. Typewriting (35 words per minute).
73	Nirmala Nanda Chunder.	
75	Md. Abdul Baset.	
76	Dwijendra Kumar Dey	.. Typewriting (30 words per minute).
77	Kanai Lal Roy	.. Typewriting (30 words per minute).
79	Hirendra Nath Das.	
81	Purnendu Narayan Roy.	
87	Jahar Lal Pal.	
88	Bimal Kumar Bose	.. Shorthand (80 words per minute).
90	Lakshmi Narayan Banerjee.	
91	M nno Eduljee Ant a.	
93	Brojeswar Banerjee.	
94	Kersasp Shapurjee Karai.	
98	M. Sadeque Ali.	
99	Narendra Nath Dey	.. Typewriting (30 words per minute).
101	Surendra Chatterjee.	
103	Bhola Nath Mukherjee.	
105	Birendra Bhusan Ghose	.. Shorthand (80 words per minute).
106	Satyabrata Ghosh	.. Typewriting (40 words per minute).
107	Tirtha Prosad Bagchi	.. Typewriting (40 words per minute).

Roll No.		
108	Ranendra Chandra Roy Choudhury.	
109	Jones Jagadananda Singha.	
111	Ranjit Kumar Mustafi	.. Shorthand (100 words per minute). Typewriting (30 words per minute).
112	Ram Shanker Mukherjee	.. Shorthand (80 words per minute). Typewriting (35 words per minute).
113	Pratul Chandra Ghose	.. Shorthand (100 words per minute). Typewriting (45 words per minute).
114	Subol Chandra Sen	.. Typewriting (40 words per minute).
115	Jyotirindra Nath Sen	.. Typewriting (30 words per minute).
116	Chaitanya Charan Ghose	.. Typewriting (30 words per minute).
117	Ajit Kumar Sarkar.	
118	Aswini Kumar Ghosh	.. Typewriting (35 words per minute).
120	Krishnananda Chattopadhyay	.. Typewriting (40 words per minute).
121	Satu Dhon Das.	
122	Bhabani Prosad Chatterjee.	
123	Tara Pada Haldar	.. Typewriting (35 words per minute).
124	Madan Gopal Awasthi	.. Typewriting (30 words per minute).
125	Ram Krishna Chakraborti.	
126	Birendra Nath Mitra	.. Typewriting (30 words per minute).
127	B. V. Krishna Murty	.. Typewriting (30 words per minute).
128	Khagesh Kumar Das.	
129	Ganga Pada Basu	.. Typewriting (35 words per minute).
133	Jadav Chandra Bhattacharya.	
135	Kshirode Lal Chakraborty.	
138	Ashu Tosh Bardhan.	
139	Nil Moni Mukerjo	.. Typewriting (40 words per minute).
141	Rama Prosad Mitra.	
142	Samarendra Chuckerbutty.	
143	Ratan Moni Chakrovorty.	
146	Jiban Krishna Kole	.. Shorthand (80 words per minute). Typewriting (35 words per minute).
147	Sourendra Nath Ghosh	.. Shorthand (80 words per minute). Typewriting (30 words per minute).
151	Bivhu Ranjan Patro.	
153	Nil Ratan Mittra.	
156	Santi Kumar Ghosh.	
158	Rukmini Kanto Dutt.	
159	Rabindra Chandra Guha.	

N.B.—(1) Roll Nos. 1, 3, 4, 6, 8 and 159 appeared as private candidates.
(2) Roll No 48 and 53 have passed Commercial Urdu instead of Commercial Bengali.
(3) Roll Nos. 51, 64, 91, 94 and 124 have passed Commercial Hindi instead of Commercial Bengali.

P. ROY,
Secretary, Government Commercial Institute Board.

Office of the Director of Public Instruction, Bengal.

NOTIFICATION.

Calcutta, the 29th June 1936.

The research scholarships of the value of Rs. 75 a month each held by the undermentioned candidates are renewed for a further period of one year, with effect from the 1st July 1936 :—

	Name of scholar.	Subject of research.	Place of work.
1.	Santosh Kumar Ray ..	Geology, with special reference to the subject of Pre-Cambrian metamorphics of the Deoghar subdivision.	Presidency College, Calcutta.
2.	A. S. M. Ayyub ..	Philosophy, with special reference to the subject of Problem of Error in Contemporary Realism.	Calcutta University.
3.	Biswoswar Datta ..	Applied Mathematics, with special reference to the subject of Theory of Relativity.	Presidency College, Calcutta.
4.	Santosh Kumar Chakrabarti ..	History of Bengal, with special reference to the subject of Social and Economic Aspects of the History of Bengal.	Ditto.
5.	Ashutosh Mukerjee ..	Organic Chemistry, with special reference to the subject of Strainless Carbon Ring Systems.	Ditto.

J. M. BOTTOMLEY,
Director of Public Instruction, Bengal.

Office of the Inspectress of Schools, Presidency and Burdwan Divisions.

NOTIFICATION.

Calcutta, the 4th July 1936.

The following members are appointed to constitute the Managing Committee of the Moslem Female Training School, Calcutta, for a period of three years from 1st May 1936 :—

1. The Inspectress of Schools, Presidency and Burdwan Divisions, President.
2. The Head Mistress, Moslem Female Training School, Calcutta, Secretary.
3. Miss T. Das, Assistant Mistress, Moslem Female Training School, Calcutta.
4. The Assistant Inspectress for Muhammadan Education, Presidency and Burdwan Divisions.
5. The Head Mistress, Sakhawat Memorial Girls' School, Calcutta.
6. Mrs. W. A. Jenkins (European lady interested in female education).
7. Mrs. H. A. Hakam, 168-1, Lower Circular Road, Calcutta (non-official).
8. Mrs. A. Momin, B.A., wife of Khan Bahadur Md. A. Momin, Hamida Hall, Russa, post-office Tollygunge (non-official).
9. Mrs. Shamsun Nahar Mahmud, B A., wife of Dr. W. Mahmud, 23, Crematorium Street, Calcutta (non-official).

S B. GUPTA,

Inspectress of Schools, Presidency and Burdwan Divisions.

Orders by the Vice-Chancellor and Syndicate of the Calcutta University.

NOTICE.

Senate House, the 4th July 1936.

The undermentioned candidate has been awarded the Onauthnauth Deb Research Prize in Law for the year 1936. The subject of his thesis is stated below his name :—

Niranjan Ray, M.A., B.L.

Subject of thesis—"The Hindu Law of Pledge and Bailments."

B. B. DUTT,

Controller of Examinations.

Orders by the Vice-Chancellor and Syndicate of the Calcutta University.

Senate House, the 25th June 1936.

NOTIFICATION No. T. 443.

Matriculation Examination, 1938.

In modification of notification No. T. 424, dated the 18th December 1935, the book entitled "Tales of Rajput Chivalry" (not "Tales of Mewar") published by the University, is prescribed to be read in English for the Matriculation Examination in 1938, as announced in notification No. T. 417, dated the 11th November 1935.

J. CHAKRAVORTI, *Registrar.*

Orders by the Vice-Chancellor and Syndicate of the Calcutta University.

NOTIFICATION No. MISC. R.15.

Senate House, the 29th June 1936.

The following changes in section 3, Chapter XXIII of the University Regulations (page 111, Edition of 1935), sanctioned by the Government of Bengal (Ministry of Education), under section 25 (*1*) of the Indian Universities Act, 1904 (VIII of 1904), as amended by the Calcutta University Act, 1921 (VII of 1921), are notified for general information :—

The words "more than three weeks after the opening of that College" be replaced by the words "after the 31st July or such other date as the Syndicate may fix in this behalf."

The Regulations as amended will read thus :—

"Admission of students to affiliated Colleges shall ordinarily be allowed only at the commencement of an academical year. If a student applies to a College for admission after the 31st July, or such other date as the Syndicate may fix in this behalf in any academical year, his case, unless he brings a transfer certificate, shall be referred to the Transfer Committee for decision as to whether he may be permitted to join such College."

The last date for admission to Colleges affiliated in Arts, Science and Law during the current session (1936-37) is fixed by the Syndicate as the 3rd of August 1936. In future years the 31st July will be fixed as the last date for such admission.

J. CHAKRAVORTI, *Registrar.*

Registered No. C207

The Calcutta Gazette

THURSDAY, JULY 9, 1936.

PART II

Advertisements.

Notices

Advertisements, Notices, etc., intended for insertion in this part of the Gazette must be sent to Press before 12 noon on Saturday, and all costs deposited and proofs returned by 4 p.m. on Monday. Manuscripts and postal remittances must be addressed to Superintendent, Government Printing (Publication Branch), Bengal Government Press, Alipore.

For the convenience of advertisers located in Calcutta, arrangements have been made to accept advertisements and prepayment of charges at Sales Office, Ground Floor, Writers' Buildings, Calcutta. The latest time for receipt of advertisements for current week's Gazette has been extended till 4 p.m. on Mondays.

PROCLAMATION OF SALE.

In the 2nd Court of the Munsif, Dinajpur.

MONEY EXECUTION CASE No. 153 OF 1936.

Gangajal Pandit, decree-holder

versus

Nibeda Sundari Choudhurani, judgment-debtor.

Claim --Rs. 2,149-2-9p.

Date fixed for sale -3rd August 1936.

THE 8 annas share of lot Parbatipur, pargana Hasia Bangalipur, mauzas Parbatipur and others under the jurisdiction of police-station Parbatipur in the district of Dinajpur bearing tauzi No. 458 of the Dinajpur Collectorate, the total revenue in the 16 annas share being Rs. 1,625-13-3pies, will be sold in auction by the Nazir of the District Judge at 12 noon on 3rd August 1936. The approximate value of the property is Rs. 2,500 and it is mortgaged to one Surajmall Beharilal of Parbatipur.

M. HOSSAIN ALY, Munsif.

Dinajpur, the 3rd July 1936. (1376—1)

In the Court of the Sub-Judge at Rajshahi.

RENT EXECUTION CASE No. 33 OF 1935.

Kedar Nath Bagchi, decree-holder

versus

Bhupendra Narayan Adhikary and others, judgment-debtors.

IT is hereby advertised that the interest of the judgment-debtors 1 to 4 in the above case in tauzi No. 2109 of the Rajshahi Collectorate, mahal Haludghar and others, bearing an annual revenue of Rs. 1,194-15 within pargana Togachhi, i. e., 16 annas of the said estate comprising mauzas Aujkuri, Boalia, Koalpara, Perulisenpara and Togachhi-Senpara in police-station Bagmara and mauza Nakail in police-station Tanor and mauza Toktapara and others in police-stotion Paba, will be sold along with other properties at public auction at 12 noon on 15th July 1936 at Court sale to be held by the Nazir of the Court in the sale room for the realization of the decree-holder's dues amounting to Rs. 1,324-1-3. The value of the property being estimated at Rs. 3,500.

B. C. CHAKRAVARTI, Sub-Judge.

Rajshahi, the 2nd July 1936. (1369—1)

SALE NOTICE

THE Divisional Forest Officer, Jalpaiguri Division, will sell the following Clear Felling, Thinning and Dry Coupes by "public auction" at 11 a.m. on the 28th July 1936, at the Forest Office, Jalpaiguri. All intending purchasers are advised to inspect the lots before attending the sale —

Clear Felling Coupes of 1936-37.

Apalchand Range

Lot No.	Species.	Green, Dry or Fallen.	Girth of trees or poles marked.								Total	Grand total	Locality.	Remarks.
			Under 3′0″.	3′0″ to 3′5″	3′6″ to 3′11″.	4′0″ to 4′5″.	4′6″ to 4′11″.	5′0″ to 5′5″	5′6″ to 5′11″.	6′ and over.				
A/1	Sal ..	Green ..	25	17	23	43	54	53	66	61	342			
		Dry ..	..	1	1	2	..	..	..	3	7	353	Apalchand IV, section I	
		Fallen ..	..	1	2	..	1	..	..	..	4			
A/2	Sal ..	Green ..	12	12	26	49	62	61	52	79	353	361	Apalchand IV, section II.	
		Dry ..	..	2	1	3	1	1	..	..	8			
A/3	Sal ..	Green ..	31	14	15	19	31	32	34	62	238			
		Dry ..	2	..	..	..	..	..	..	..	2	241	Udlabari II, section I	
	Champ ..	Green ..	..	..	..	..	..	..	1	..	1			
A/4	Sal ..	Green ..	22	9	24	36	36	44	49	76	296			
		Dry ..	2	..	..	..	..	..	..	..	2	300	Udlabari II. section II.	
	Champ ..	Green ..	..	..	..	..	.	..	1	1	2			
A/5	Sal ..	Green ..	640	170	170	148	121	62	40	67	1,418			
		Dry ..	76	7	7	6	1	..	2	2	101	1,530	Hanskhali I, section I.	
		Fallen ..	..	3	1	1	..	..	..	..	5			
	Gamari ..	Green ..	..	1	1	..	1	..	1	2	6			
A/6	Sal .	Green ..	511	153	182	170	150	93	48	44	1,351			
		Dry ..	155	7	5	10	..	1	1	1	180			
		Fallen ..	..	2	..	2	..	3	..	..	7	1,547	Hanskhali I, section II.	
	Gamari ..	Green ..	..	1	2	.	1	..	1	..	5			
	Chilauni ..	Green ..	..	..	2	1	..	1	..	..	4			

Thinning Coupes of 1936-37.

Apalchand Range.

A/7	Sal ..	Green ..	99	63	42	16	13	6	2	6	247			
		Dry ..	116	13	24	22	25	16	11	9	236			
		Fallen ..	1	1	..	2	..	.	..	..	4	492	Hanskhali I, section I.	
	Chilauni ..	Green ..	..	..	1	..	..	..	.	..	1			
	Simul ..	Green ..	..	..	..	1	..	..	1	1	3			
	Halure ..	Green ..	..	..	..	1	..	..	..	..	1			

A/8	Sal ..	Green ..	112	66	50	34	11	9	7	3	292	535	Hanskhali I, section II.		
		Dry ..	109	27	25	30	17	13	10	8	239				
		Fallen ..	..	..	..	1	..	..	2	..	3				
	Sidha ..	Green ..	..	1	..	..	..	..	..	..	1				
A/9	Sal ..	Green ..	128	62	34	8	10	10	7	4	263	434	Hanskhali I, section III.		
		Dry ..	98	18	10	11	5	6	3	3	154				
		Fallen ..	2	2	2	3	2	..	..	2	13				
	Kawla ..	Green ..	..	1	..	..	2	..	..	..	3				
	Pakasaj ..	Green ..	..	..	1	..	..	..	..	..	1				
A/10	Sal ..	Green ..	232	69	45	19	11	4	2	..	382	675	Hanskhali I, section IV.		
		Dry ..	170	32	15	17	9	3	5	5	256				
		Fallen ..	4	9	4	4	..	3	..	..	24				
	Chilauni ..	Green ..	..	1	1	4	1	3	..	1	11				
	Pakasaj ..	Green ..	..	..	1	..	..	..	..	..	1				
	Simul ..	Green ..	..	..	..	..	..	1	..	..	1				
A/11	Sal ..	Green ..	11	9	7	1	2	2	..	..	32	54	Hanskhali II, section I.		
		Dry ..	14	1	2	1	1	1	..	..	20				
	Sidha ..	Green ..	..	..	..	1	1	..	..	..	2				
A/12	Sal ..	Green ..	7	15	14	38	32	19	15	15	155	247	Hanskhali III, section I.		
		Dry ..	32	25	16	8	5	1	1	3	91				
	Parari ..	Green ..	..	..	..	..	..	1	..	..	1				
A/13	Sal ..	Green ..	10	27	35	36	27	15	13	14	177	290	Hanskhali III, section II.		
		Dry ..	36	13	15	12	9	7	3	10	105				
		Fallen ..	..	..	..	1	2	..	1	1	5				
	Chilauni ..	Green ..	..	..	..	1	..	..	1	..	2				
	Pakasaj ..	Green ..	..	..	..	..	..	..	1	..	1				
A/14	Sal ..	Green ..	14	13	25	27	30	25	18	16	168	322	Hanskhali III, section III.		
		Dry ..	30	37	25	15	16	8	3	6	140				
		Fallen ..	4	3	4	1	..	..	..	1	13				
	Sidha ..	Green ..	..	..	..	..	..	..	1	..	1				
A/15	Sal ..	Green ..	44	49	92	70	38	19	11	11	334	356	Hanskhali III, section IV.		
		Dry ..	7	6	2	2	..	..	..	2	19				
		Fallen ..	..	1	..	..	..	..	..	..	1				
	Sidha ..	Green ..	..	..	..	1	..	..	..	..	1				
	Bahera ..	Green ..	..	..	..	1	..	..	..	..	1				
A/16	Sal ..	Green ..	8	34	46	59	50	47	35	30	309	489	Hanskhali III, section V.		
		Dry ..	89	17	16	16	14	6	5	3	166				
		Fallen ..	2	3	3	2	1	1	..	..	12				
	Chilauni ..	Green ..	..	..	..	..	..	..	1	..	1				
	Sidha ..	Green ..	..	..	..	..	..	1	..	..	1				
A/17	Sal ..	Green ..	7	38	67	83	65	53	35	27	375	494	Hanskhali III, section VI.		
		Dry ..	76	19	4	8	..	2	3	1	113				
		Fallen ..	..	2	..	..	..	..	..	..	2				
	Kawla ..	Green ..	..	1	2	..	1	..	..	..	4				

Lot No.	Species.	Green, Dry or Fallen.	Girth of trees or poles marked.								Total.	Grand total.	Locality.	Remarks.
			Under 3′0″.	3′0″ to 3′5″.	3′6″ to 3′11″.	4′0″ to 4′5″.	4′6″ to 4′11″.	5′0″ to 5′5″.	5′6″ to 5′11″.	6′ and over.				
A/18	Sal ..	Green ..	14	34	47	44	51	42	30	54	316	436	Hanskhali III, section VII.	
		Dry ..	53	12	10	3	3	3	2	4	90			
		Fallen ..	2	6	3	5	..	1	..	..	17			
	Chilauni ..	Green ..	..	..	..	1	4	..	2	4	11			
	Simul ..	Green ..	..	..	..	..	..	1	..	..	1			
	Bahera ..	Green ..	..	..	..	..	..	..	..	1	1			
A/19	Sal ..	Green ..	5	14	26	42	37	28	35	41	228	300	Hanskhali III, section VIII.	
		Dry ..	28	8	8	5	3	3	1	2	58			
		Fallen ..	1	4	1	..	..	..	..	..	6			
	Chilauni ..	Green ..	..	..	..	..	1	1	2	..	4			
	Pakasaj ..	Green ..	1	1	1	..	1	..	..	..	4			
A/20	Sal ..	Green ..	12	16	21	18	22	15	12	28	144	166	Hanskhali III, section IX.	
		Dry ..	6	5	7	1	2	..	..	..	21			
	Kawla ..	Green ..	..	1	..	..	..	..	..	..	1			
A/21	Sal ..	Green ..	18	31	35	23	19	24	24	19	193	225	Hanskhali III, section X.	
		Dry ..	18	2	2	1	1	1	..	..	25			
		Fallen ..	..	..	1	..	..	..	..	..	1			
	Parari ..	Green ..	..	..	..	..	..	1	..	..	1			
	Sidha ..	Green ..	..	1	..	..	..	..	..	..	1			
	Kawla ..	Green ..	..	..	1	3	..	..	..	..	4			
A/22	Sal ..	Green ..	55	69	85	78	64	62	46	66	525	609	Hanskhali III, section XI.	
		Dry ..	29	9	4	7	3	4	2	..	58			
		Fallen ..	1	8	2	3	..	1	..	..	15			
	Pakasaj ..	Green ..	..	1	..	..	..	..	..	..	1			
	Sidha ..	Green ..	..	..	1	1	.	2	..	1	5			
	Chilauni ..	Green ..	..	..	..	..	1	..	1	3	5			
A/23	Sal ..	Green ..	46	63	75	74	88	63	44	86	539	666	Hanskhali III section XII.	
		Dry ..	35	7	4	9	5	5	6	2	73			
		Fallen ..	3	9	6	9	6	5	2	1	41			
	Chilauni ..	Green ..	..	..	3	1	3	1	..	4	12			
	Pakasaj ..	Green ..	..	..	..	..	..	1	..	..	1			
A/24	Sal ..	Green ..	46	91	89	73	73	50	37	48	507	610	Hanskhali III, section XIII.	
		Dry ..	28	4	4	8	8	2	2	..	56			
		Fallen ..	2	10	10	6	3	5	3	3	42			
	Simul ..	Green ..	..	1	..	..	..	..	..	..	1			
	Chilauni ..	Green ..	..	..	2	..	..	..	1	..	3			
	Sidha ..	Green ..	..	..	..	1	..	..	..	..	1			
A/25	Sal ..	Green ..	62	124	131	112	97	59	41	58	684	773	Hanskhali III, section XIV.	
		Dry ..	56	6	4	2	6	3	2	1	80			
		Fallen ..	..	1	..	2	..	..	..	..	3			
	Kawla ..	Green ..	..	1	..	1	.	..	..	..	2			
	Sidha ..	Green ..	..	1	1	1	..	..	..	..	3			
	Chilauni ..	Green ..	..	..	..	..	1	..	..	..	1			

A/26	Sal ..	Green ..	25	51	53	31	25	13	9	13	220	233	Hanskhali III, section XV.
		Dry ..	4	4	..	..	..	1	..	..	9		
		Fallen ..	..	..	..	1	..	..	..	..	1		
	Sidha ..	Green ..	..	1	..	1	..	..	..	..	2		
	Bahera ..	Green ..	..	..	1	..	..	..	..	..	1		
A/27	Sal ..	Green ..	31	49	64	37	20	6	7	9	223	230	Hanskhali III, section XVI.
		Dry ..	3	..	1	1	..	..	..	..	5		
	Kawla ..	Green ..	..	1	..	..	..	..	..	..	1		
	Sidha ..	Green ..	..	1	..	..	..	..	..	..	1		
A/28	Sal ..	Green ..	88	104	87	75	72	33	19	18	496	548	Hanskhali IV, section I.
		Dry ..	21	7	6	3	1	1	1	3	46		
		Fallen ..	..	1	1	..	..	..	..	..	2		
	Kawla ..	Green ..	..	1	..	1	..	..	..	..	2		
	Parari ..	Green ..	..	1	..	..	..	..	..	..	1		
	Halurai ..	Green ..	..	..	..	..	1	..	..	..	1		
A/29	Sal ..	Green ..	131	88	52	40	16	7	7	4	345	536	Hanskhali IV, section II.
		Dry ..	136	20	7	9	2	2	1	5	182		
		Fallen ..	2	..	2	..	2	..	..	..	6		
	Sidha ..	Green ..	..	1	..	1	..	..	..	..	2		
	Simul ..	Green ..	..	..	..	..	..	1	..	..	1		
A/30	Sal ..	Green ..	60	30	12	6	6	1	2	5	122	438	Hanskhali IV, section III.
		Dry ..	231	27	13	12	6	3	5	4	301		
		Fallen ..	..	3	..	7	1	..	..	..	11		
	Kawla ..	Green ..	..	2	..	..	1	..	..	..	3		
	Katus ..	Green ..	..	1	..	..	..	..	..	..	1		
A/31	Sal ..	Green ..	60	22	15	6	3	3	..	2	111	655	Hanskhali IV, section IV.
		Dry ..	429	56	18	16	10	5	3	2	539		
		Fallen ..	1	..	2	..	..	..	..	..	3		
	Kawla ..	Green ..	..	1	..	..	..	..	..	..	1		
	Simul ..	Green ..	..	..	..	..	..	..	1	..	1		
A/32	Sal ..	Green ..	10	10	5	3	..	1	..	..	29	474	Hanskhali IV, section V.
		Dry ..	216	51	37	43	17	14	11	11	430		
		Fallen ..	4	2	..	2	2	2	..	1	13		
	Sidha ..	Green ..	..	..	1	1	..	..	..	..	2		
A/33	Sal ..	Green ..	33	15	7	2	1	1	..	..	59	366	Hanskhali IV, section VI.
		Dry ..	104	50	34	32	18	14	11	7	270		
		Fallen ..	6	7	4	13	..	1	2	3	36		
	Sidha ..	Green ..	..	1	..	..	..	..	..	..	1		
A/34	Sal ..	Green ..	293	31	15	4	5	2	1	3	354	390	Chengmari V, section I.
		Dry ..	24	4	..	1	1	..	..	..	30		
		Fallen ..	..	..	..	1	..	..	..	..	1		
	Simul ..	Green ..	..	1	..	..	..	..	..	..	1		
	Udal ..	Green ..	..	..	..	..	..	1	2	1	.. 4		

Lot No.	Species.	Green, Dry or Fallen.	Girth of trees or poles marked.								Total.	Grand total.	Locality.	Remarks.
			Under 3'0".	3'0" to 3'5".	3'6" to 3'11".	4'0" to 4'5".	4'6" to 4'11".	5'0" to 5'5".	5'6" to 5'11".	6' and over.				
Dry Coupes of 1936-37.														
Apalchand Range.														
A 35	Sal ..	Dry ..	1	3	6	8	7	8	4	5	42	46	Udalabari I, section I.	
		Fallen ..	..	2	1	1	..	..	..	..	4			
A 36	Sal ..	Dry ..	26	65	48	61	57	32	34	39	362	493	Udalbari II, section I.	
		Fallen ..	5	8	19	20	26	25	9	19	131			
A 37	Sal ..	Dry ..	18	53	75	58	48	29	24	37	342	387	Udalbari III, section I.	
		Fallen ..	..	10	12	8	5	4	3	3	45			
A 38	Sal ..	Green (partly) ..	..	..	..	..	..	1	..	..	1	208	Udalbari III, section II.	
		Dry ..	9	26	27	27	19	25	9	13	155			
		Fallen ..	3	2	12	8	10	4	10	3	52			
A 39	Sal ..	Dry ..	15	49	37	40	16	18	8	14	197	267	Udalbari III, section III.	
		Fallen ..	3	16	18	12	10	4	2	4	69			
	Chilauni ..	Fallen ..	..	..	..	..	..	..	..	1	1			
A 40	Sal ..	Dry ..	15	35	34	38	36	26	20	28	232	350	Udalbari III, section IV.	
		Fallen ..	5	30	26	7	25	13	11	1	118			
A 41	Sal ..	Dry ..	11	25	40	40	27	18	21	33	215	327	Udlabari III, section V.	
		Fallen ..	4	25	21	6	20	13	15	8	112			
Clear Felling Coupes of 1936-37.														
Lower Tondu Range														
LT 42	Sal ..	Green ..	37	19	34	35	44	33	40	52	294	298	Lataguri I, section I.	
		Dry ..	..	1	1	..	..	..	..	1	3			
		Fallen ..	..	..	..	1	..	..	..	..	1			
LT 43	Sal ..	Green ..	1	4	4	12	18	19	12	46	116	116	Lataguri I, section II.	
LT 44	Sal ..	Green ..	12	10	9	11	13	16	19	42	132	141	Central III, section I.	
		Dry ..	2	1	2	..	1		..	..	8			
		Fallen ..	..	1	..	..	..	..		..	1			

Thinning Coupes of 1936-37.

Lower Tondu Range.

LT/45	Sal ..	Green ..	31	41	53	65	49	37	17	23	316			
		Dry ..	17	8	10	5	3	3	2	1	49			
		Fallen ..	..	1	..	..	..	4	..	..	5	376	Gorumara I, section I.	
	Pakasaj ..	Green ..	..	3	1	..	..	1	..	1	6			
LT/46	Sal ..	Green ..	14	31	25	27	27	30	11	15	180			
		Dry ..	19	7	8	9	3	3	1	3	53			
		Fallen ..	..	2	..	1	1	..	2	..	6			
	Pakasaj ..	Green ..	..	3	2	1	1	..	..	1	8	252	Gorumara I, section II.	
	Bahera ..	Green ..	..	..	2	..	..	..	1	..	3			
	Parari ..	Green ..	..	..	..	..	1	..	..	..	1			
	Simul ..	Green ..	..	..	..	..	..	..	1	..	1			
LT/47	Sal ..	Green ..	8	15	20	28	26	26	12	23	158			
		Dry ..	55	9	10	13	8	5	4	4	108			
		Fallen ..	2	5	4	6	..	1	1	3	22	290	Gorumara I, section III.	
	Bahera ..	Green ..	..	..	..	1	..	..	..	..	1			
	Chilauni ..	Green ..	..	..	..	..	1	..	..	..	1			
LT/48	Sal ..	Green ..	22	15	19	15	12	11	5	14	113			
		Dry ..	20	2	..	..	1	..	..	..	23			
		Fallen ..	..	..	..	..	1	..	..	..	1			
	Kawla ..	Green ..	..	..	..	1	..	..	1	..	2			
	Chilauni ..	Green ..	..	..	1	2	..	..	..	..	3	151	Gorumara I, section IV.	
	Bahera ..	Green ..	1	..	1	1	..	..	1	..	4			
	Pakasaj ..	Green ..	..	2	..	1	..	1	..	..	4			
	Gahelo ..	Green ..	..	..	..	1	..	..	..	..	1			
LT/49	Sal ..	Green ..	13	16	33	39	40	43	31	40	255			
		Dry ..	40	17	12	12	4	6	1	5	97			
		Fallen ..	..	4	2	4	1	6	1	..	18			
	Kawla ..	Green ..	..	4	2	11	4	6	2	3	32			
	Chilauni ..	Green ..	..	..	..	1	1	1	4	2	9	413	Gorumara I, section V.	
	Jamon ..	Green ..	..	..	1	..	..	..	..	..	1			
	Kutmero ..	Green ..	..	..	..	1	..	..	..	..	1			
LT/50	Sal ..	Green ..	1	..	2	12	17	15	16	25	88			
		Dry ..	35	10	14	9	9	14	2	1	94			
		Fallen ..	1	3	3	3	3	1	..	..	14			
	Kawla ..	Green ..	..	..	1	..	1	1	2	3	8	206	Gorumara I, section VI.	
	Chilauni ..	Green ..	..	..	..	..	1	..	..	1	2			

Lot No.	Species.	Green, Dry or Fallen.	Girth of trees or poles marked.							Total.	Grand total.	Locality.	Remarks.
			Under 3'0".	3'0" to 3'5".	3'6" to 3'11".	4'0" to 4'5".	4'6" to 4'11".	5'0" to 5'5".	5'6" to 5'11".	6' and over.				
Dry Coupes of 1936-37.														
Lower Tondu Range.														
LT/51	Sal ..	Green (partly) ..	..	..	2	2	..	2	3	1	13	549	Bichabhanga I.	
		Dry ..	30	90	71	80	76	48	45	54	494			
		Fallen ..	5	5	6	7	8	4	3	4	42			
LT/52	Sal ..	Green (partly) ..	..	3	1	..	1	..	..	1	6	492	Barahati I, section I.	
		Dry ..	82	97	74	47	34	22	20	22	398			
		Fallen ..	10	23	18	16	6	7	4	4	88			
LT/53	Sal ..	Green (partly) ..	..	1	..	..	..	1	..	..	2	384	Barahati I, section II.	
		Dry ..	29	69	38	58	29	26	35	13	297			
		Fallen ..	8	17	14	17	9	10	4	6	85			
LT/54	Sal ..	Green (partly) ..	..	5	9	1	2	1	1	1	20	922	Barahati II, section I.	
		Dry ..	99	207	156	113	78	52	37	52	794			
		Fallen ..	9	27	25	22	9	7	4	5	108			
LT/55	Sal ..	Green (partly) ..	..	..	..	..	1	..	..	..	1	487	Central III, section I.	
		Dry ..	42	61	58	65	47	47	23	35	378			
		Fallen ..	10	16	16	22	18	14	8	4	108			
LT/56	Sal ..	Dry ..	23	45	46	44	34	32	28	27	279	322	Central III, section II.	
		Fallen ..	2	3	2	4	10	5	7	10	43			
LT/57	Sal ..	Green (partly) ..	2	..	4	..	3	4	1	1	15	235	Sursuti V, section I.	
		Dry ..	17	48	30	32	19	16	14	16	192			
		Fallen ..	9	7	5	2	..	2	2	1	28			
Clear Felling Coupes of 1936-37.														
Upper Tondu Range.														
UT/58	Sal ..	Green ..	71	41	41	33	40	32	21	31	310	319	Bhokolmardi II, section I.	
		Dry ..	2	1	..	..	..	..	..	..	3			
		Fallen ..	..	1	2	..	1	1	..	..	5			
	Chilauni ..	....	..	..	..	..	..	..	1	..	1			
UT/59	Sal ..	Green ..	80	41	40	51	46	33	25	28	344	358	Bhokolmardi II, section II.	
		Dry ..	8	..	2	..	..	..	..	..	10			
		Fallen ..	..	2	..	..	..	..	..	..	2			
	Chilauni ..	....	..	..	..	..	..	1	..	1	2			

UT/60	Sal ..	Green ..	34	34	25	41	39	26	25	37	261	279	Bhokolmardi II, section III.		
		Dry ..	11	1	..	..	..	..	..	1	13				
	Chilauni ..	....	..	..	..	..	..	2	..	3	5				
UT/61	Sal ..	Green ..	16	13	15	25	20	22	22	30	163	190	Bhokolmardi II, section IV.		
		Dry ..	11	1	1	..	1	..	1	..	15				
		Fallen ..	..	1	..	1	..	..	1	1	4				
	Chilauni ..	....	..	..	..	..	2	1	1	2	6				
	Gamar ..	.... ..	..	..	..	..	1	..	..	..	1				
	Champ ..	....	..	..	..	..	..	..	1	..	1				

Dry Coupes of 1936-37.

Upper Tondu Range.

UT/62	Sal ..	Green (partly) ..	..	10	7	3	3	3	5	3	34	407	Selkapara I, section I.		
		Dry ..	109	52	29	25	18	16	7	9	265				
		Fallen ..	..	46	18	21	8	5	2	8	108				
UT/63	Sal ..	Green (partly) ..	..	9	3	5	1	7	2	6	33	435	Selkapara I, section II.		
		Dry ..	130	26	22	21	10	10	15	9	246				
		Fallen ..	..	71	44	22	10	4	4	1	156				
UT/64	Sal ..	Dry ..	40	3	4	1	4	4	3	7	66	86	Selkapara II.		
		Fallen ..	..	8	5	2	2	1	2	..	20				
UT/65	Sal ..	Green (partly) ..	..	15	19	12	5	7	3	4	65	539	Tondu IV ..		Dying, top-dry and top broken.
		Dry ..	234	64	35	31	20	10	7	10	411				
		Fallen ..	..	28	14	7	6	3	..	5	63				
UT/66	Sal ..	Dry ..	62	8	5	4	5	2	2	5	93	118	Hillajhora IV.		
		Fallen ..	..	3	4	6	2	3	1	6	26				

Clear Felling Coupes of 1936-37.

Moraghat Range.

Mor/67	Sal ..	Green ..	..	12	28	13	14	13	5	20	105	106	South Moraghat V, section I.		
		Dry ..	..	..	1	..	..	..	..	..	1				
Mor/68	Sal ..	Green ..	..	14	20	15	20	15	9	28	121	123	South Moraghat V, section II.		
		Dry ..	..	..	..	..	1	..	1	..	2				
Mor/69	Sal ..	Green ..	..	24	44	24	30	19	19	18	178	182	South Moraghat V, section III.		
		Dry ..	..	..	..	1	..	..	1	2	4				
Mor/70	Sal ..	Green ..	..	28	33	21	3	7	2	14	108	113	South Moraghat VIII.		
		Dry ..	..	..	..	..	..	1	..	..	1				
		Fallen ..	..	2	2	..	..	..	..	..	4				
Mor/71	Sal ..	Green ..	..	..	1	4	2	3	5	34	49	52	Dalgaon I.		
		Dry ..	..	..	..	..	..	..	1	2	3				

Lot No.	Species.	Green, Dry or Fallen.	Girth of trees or poles marked.							Total.	Grand total.	Locality.	Remarks.
			Under 3'0".	3'0" to 3'5".	3'6" to 3'11".	4'0" to 4'5".	4'6" to 4'11".	5'0" to 5'5".	5'6" to 5'11".	6' and over.				
Special Felling Coupes of 1936-37.														
Moraghat Range.														
Mor/72	Sal ..	Green ..	..	8	6	6	2	3	1	7	33	33	South Moraghat —Compt. line No. 6.	
Dry Coupes of 1936-37.														
Moraghat Range.														
Mor/73	Sal ..	Dry ..	..	73	60	60	48	42	15	24	322	332	South Moraghat III.	
		Fallen ..	..	2	4	3	..	..	1	..	10			
Mor/74	Sal ..	Dry ..	..	27	19	27	24	17	12	39	165	179	Central—Moraghat VI.	
		Fallen ..	..	4	..	6	1	..	2	1	14			
Mor/75	Sal ..	Dry ..	..	17	16	5	13	6	3	10	70	71	Central—Moraghat IX.	
		Fallen ..	..	..	..	..	1	..	..	..	1			
Clear Felling Coupes of 1936-37.														
Madarihat Range.														
MD/76	Sal ..	Green ..	..	..	1	4	5	8	12	16	46	65	Dumchi II.	
		Dry ..	..	1	3	1	2	1	2	..	10			
	Gamari ..	Green ..	..	..	..	..	..	..	..	1	1			
	Halurai ..	Green ..	..	..	..	..	..	..	..	1	1			
	Latore ..	Green ..	..	..	..	..	..	..	1	..	1			
	Chailauni ..	Green ..	..	..	..	2	2	..	..	2	6			

Conditions.

1. The Divisional Forest Officer does not bind himself to accept the highest or any offer for any lot or to give any reason for such non-acceptance.

2. The sale of any lot, the value of which exceeds Rs. 5,000 shall not be complete until confirmed by the Conservator of Forests, Bengal.

3. The purchaser whose offer is accepted by the Officer, holding the sale, must deposit earnest money of Rs. 300 and in the event of the sale being confirmed the earnest money will be returned as part of the security deposit. In the event of the sale not being confirmed the earnest money will be returned.

4. A security deposit of 15 per cent. of the purchase-price must be deposited within 10 days of the confirmation of the sale. In the event of the security deposit being less than Rs. 300, the difference between the security and earnest money will be credited towards the first instalment.

5. Failure to complete the payment of security deposit by the prescribed date will render the purchaser liable to the forfeiture of his earnest money and failure to execute the agreement within one month of receiving the same will render the purchaser liable to the forfeiture of the security deposit.

6. The lot or lots so affected shall be resold by public auction at the discretion of the Divisional Forest Officer, and the purchaser shall be liable for any loss to Government on such resale.

7. Purchasers will be required to execute agreements in the printed form for outright sales (copies of which may be seen in the Divisional Forest Offices, Jalpaiguri, Buxa, Kurseong, Kalimpong and Darjeeling).

8. The following are among the conditions of the agreements for "Dry Coupes":—

(*a*) Felling and extraction to be completed by 31st May 1938.

(*b*) The purchase-price to be paid in four approximately equal instalments on or before—

1st instalment	.. ..	1st November 1936.
2nd instalment	.. ..	1st April 1937.
3rd instalment	.. ..	1st November 1937.
4th instalment	.. ..	1st April 1938.

9. The following are among the conditions of the agreements for "Thinning Coupes":—

(*a*) All marked trees must be felled.

(*b*) Felling to be completed by 30th September 1937.

(*c*) The purchase-price to be paid in four approximately equal instalments on or before—

1st instalment	.. ..	1st November 1936.
2nd instalment	.. ..	1st February 1937.
3rd instalment	.. ..	1st May 1937.
4th instalment	.. ..	1st September 1937.

10. The following are among the conditions for "Clear Felling Coupes":—

(*a*) Felling and extraction to be completed by 31st March 1937.

(*b*) The purchase-price to be paid in three approximately equal instalments on or before—

1st instalment	.. ..	1st November 1936.
2nd instalment	.. ..	1st January 1937.
3rd instalment	.. ..	1st February 1937.

11. No timber may be removed from any coupe unless paid for in full.

12. Claims for shortage of trees will be considered up to two months from the date of confirmation of sale.

13. Under no circumstances will the security deposit be credited towards the last instalment.

D. A. G. DAVIDSON,
Divisional Forest Officer, Jalpaiguri Division.

Jalpaiguri, the 25th June 1936.

Land Sale Notice.

Advertisement of sale.

NOTICE is hereby given that the undermentioned plot of land, no longer required by Government, situated along the B. A. K. Section of the East Indian Railway in the district of Murshidabad, will be put up to sale at 12 noon on the 17th August 1936 corresponding to 1st Bhadra, 1343 B. S. (Fasli) at the Court of the Subdivisional Officer, Jangipur, district Murshidabad.

The purchasers of the plot of land will be subject to the following conditions :—

1st.—The purchaser will have no power to make any excavations on the land nearer than fifteen feet from the railway boundary or to plough the land nearer than three feet from the same.

2nd.—If the amount of purchase-money does not exceed Rs. 100, the whole amount must be paid down at once.

3rd.—If the amount of purchase-money exceeds Rs. 100, one-fourth of the amount must be immediately deposited. If the balance be not paid by noon of the fifteenth day after the sale, reckoning the day of sale as one, or if that day be a close holiday, then by noon of the first succeeding office day, the sale shall be cancelled, the sum deposited being forfeited to Government and the lot again put up for sale at the risk of the defaulting purchaser after issue of advertisement as in the case of original sale.

4th.—The plot of land will be sold subject to an annual assessment of Rs. 25 which will be subject to revision at the next general settlement of the temporarily-settled estates of the district to the highest bidders.

5th.—The sale will become final on receipt by the Collector of the orders of the Commissioner confirming it, and a regular conveyance will then be granted to the purchaser.

Consecutive lot No.	Name of district.	Pargana and mauza.	Number of mile on which land is situated.	Situated on which side of the railway.	Approximate area of lot in acres and decimals.	Land excluded from sale from each lot.		Commencement and termination of lot.	Boundary of lot.
						Reasons for exclusion.	Acres and decimals.		
1	2	3	4	5	6	7		8	9
1	Murshidabad	Pargana Gankar and Joar Birahimpur, village Kanupur, J. L. No. 1.	Mile No. 69 of B. A. K. Section of E. I. Rly.	On the eastern side of the railway line.	22·88 acres comprising settlement plot No. 477 of mauza Kanupur, J. L. No. 1.	Nil	Nil	Commencing from chainage 118·988 and terminating in chainage 119·530.	North—By Phalgu nalla, cadastral survey plot No. 372 of mauza Kanupur, J. L. No. 1 (police-station Raghunathganj). South—By road from Raghunathganj to Bahutal, cadastral survey plot No. 579 of mauza Kanupur, J. L. No. 1 (police-station Raghunathganj). East—By district board road from Ramnagar to Farakka, cadastral survey plot No. 1016 of mauza Kanupur, J. L. No. 1 (police-station Raghunathganj). West—By railway land, cadastral survey plot No. 474 of mauza Kanupur, J. L. No. 1 (police-station Raghunathganj).

Berhampore, the 16th June 1936.

L. G. DURNO, Collector.

SUMMONS FOR DISPOSAL OF SUIT.

(Order V, rules 1 and 5, Code of Civil Procedure.)

In the Court of the Deputy Collector at Deoghar, Santal Parganas.

MONEY SUIT No. 189 OF 1935.

To Hari Das Pal, Nani Sette's house, Darmahatta Street, Calcutta.

WHEREAS Kalicharan Chatterjee, at present Deputy Magistrate of Purulia, district Manbhum, has instituted a suit against you for Rs. 136 due on account of house rent and damages, you are hereby summoned to appear in this Court in person or by a pleader duly instructed, and able to answer all material questions relating to the suit or who shall be accompanied by some person able to answer all such questions on the 23rd day of July 1936 at 10-30 a.m. to answer the claim; and as the day fixed for your appearance is appointed for the final disposal of the suit, you must be prepared to produce on that day all the witnesses upon whose evidence and all the documents upon which you intend to rely in support of your defence.

Take notice that, in default of your appearance on the day before mentioned, the suit will be heard and determined in your absence.

Given under my hand and the seal of the Court this 9th day of June 1936.

S. A. ASHRAF, Deputy Collector.

(800—2)

In the 1st Court of the Munsif at Rangpur.

RENT EXECUTION CASE No. 387 OF 1936.

Sale date—21st July 1936.

Kumaresh Chandra Banerji and others, decree-holders

versus

Abdul Ajiz and others, judgment-debtors.

RANGPUR Collectorate tauzi No. 163/8, pargana Kundi, police-station Kotowali, mahal Pirajabad, kisamat Kajla, kisamat Pirajabad, Jotejugi. Revenue in 16 annas Rs. 19,547-2, out of it tauzi No. 163/8 bears revenue Rs. 37-11 as. 9 pies. Account 163/8 standing in the name of Abdul Ajiz Miah.

Approximate value Rs. 50.

R. M. CHATTERJEE, Munsif.

Rangpur, the 30th June 1936. (1355—1)

In the High Court of Judicature at Fort William in Bengal, in Insolvency.

NOTICE OF ADJUDICATION ORDER.

No. 85 of 1936.

Re Surajmull Agarwalla, residing at No. P66-1, Strand Bank Road, in the town of Calcutta, and at present working for gain as gomostha at No. P66-1, Strand Bank Road, Calcutta, ex parte the debtor.

Kamal Krishna Sen, debtor's solicitor.

ON the 30th day of June 1936 an order was made by the High Court of Judicature at Fort William in Bengal in its insolvency jurisdiction adjudging the abovenamed as an insolvent.

Note.—All debts due to the estate should be paid to me.

Dated this 3rd day of July 1936.

G. M. FALKNER, Official Assignee.

In the High Court of Judicature at Fort William in Bengal, in Insolvency.

NOTICE OF ADJUDICATION ORDER.

No. 86 of 1936.

Re Charles Cecil Ryan, lately residing at No. 10, Marsden Street, but at present residing at No. 17, Marsden Street, in the town of Calcutta, and employed as a Bridge Inspector under the Commissioners for the Port of Calcutta, ex parte the debtor in person.

ON the 25th day of June 1936 an order was made by the High Court of Judicature at Fort William in Bengal in its insolvency jurisdiction adjudging the abovenamed as an insolvent.

Note.—All debts due to the estate should be paid to me.

Dated this 29th day of June 1936.

G. M. FALKNER, Official Assignee.

In the High Court of Judicature at Fort William in Bengal, in Insolvency.

NOTICE OF ADJUDICATION ORDER.

No. 87 of 1936.

Re Pramotha Nath Misra, residing at No. 18-A, Ram Chandra Chatterjee Lane, in the town of Calcutta, a clerk in the National Bank of India, Limited, Calcutta, ex parte the debtor.

N. C. Bural and Pyne, debtor's solicitors.

ON the 26th day of June 1936, an order was made by the High Court of Judicature at Fort William in Bengal in its insolvency jurisdiction adjudging the abovenamed as an insolvent.

Note.—All debts due to the estate should be paid to me.

Dated this 30th day of June 1936.

G. M. FALKNER, Official Assignee.

In the High Court of Judicature at Fort William in Bengal, in Insolvency.

NOTICE OF ADJUDICATION ORDER.

No. 88 of 1936.

Re Gour Charan Mullick, residing at No. 81, Chasa Dhobapara Street, in the town of Calcutta, working as a clerk in the office of Messrs. Macneill & Co., at No. 2, Fairlie Place, Calcutta, and also lately working as a broker in jewellery at the above address, ex parte the debtor in person.

ON the 30th day of June 1936, an order was made by the High Court of Judicature at Fort William in Bengal in its insolvency jurisdiction adjudging the abovenamed as an insolvent.

Note.—All debts due to the estate should be paid to me.

Dated this 3rd day of July 1936.

G. M. FALKNER, Official Assignee.

In the High Court of Judicature at Fort William in Bengal, in Insolvency.

NOTICE is hereby given that the dividends as noted below have been declared and will be paid to the creditors on application to the undersigned with necessary documents in support :—

No. 87 of 1934.

Estate James William Collins (Firm Colbert & Co.)—2nd dividend at Re. 1 per cent.

No. 14 of 1936.

Estate Joseph Stanislaus Augustine—1st dividend at Rs. 35 per cent.

G. M. FALKNER, Official Assignee.

10, Old Post Office Street, Calcutta, the 29th June 1936. (1352—1)

In the Court of the Sub-Judge at Asansol.

Section 19 (2) of the Provincial Insolvency Act.

INSOLVENCY CASE No. 18 OF 1936.

NOTICE is hereby given to his creditors that the insolvency petition filed by J. A. Curryan, Driver, E. I. Railway, Asansol, has been admitted, and the 17th July 1936 has been fixed for hearing thereof.

K. BANERJI, Sub-Judge.

Asansol, the 17th June 1936. (1304—1)

In the Court of the Sub-Judge at Asansol.

Section 41 (1) of the Provincial Insolvency Act.

INSOLVENCY CASE No. 7 OF 1935.

Golak Nath Ray of Fuljhori, police-station Faridpur, Chouki Asansol, district Burdwan, insolvent.

TAKE notice that the petition for discharge filed by the aforesaid insolvent has been admitted, and that the Court has fixed 11th July 1936 as the date for the hearing thereof.

K. BANERJI, Sub-Judge.

Asansol, the 19th June 1936. (1305—1)

In the Court of the Sub-Judge at Asansol.

INSOLVENCY CASE No. 7 OF 1936.

G. Miller, petitioner.

TAKE notice that the petitioner aforesaid has been adjudged an insolvent on 12th June 1936, and that he has been directed to apply for his discharge within one year from that date.

K. BANERJI, Sub-Judge.

Asansol, the 19th June 1936. (1306—1)

In the Court of the Sub-Judge at Asansol.

INSOLVENCY CASE No. 11 OF 1936.

Srikissen Lall of Barakar, petitioner.

TAKE notice that the petitioner aforesaid has been adjudged an insolvent on 12th June 1936, and that he has been directed to apply for his discharge within one year from that date.

K. BANERJI, Sub-Judge.

Asansol, the 19th June 1936. (1307—1)

In the Court of the Sub-Judge at Asansol.

INSOLVENCY CASE No. 4 OF 1936.

Ram Bhajan Doshad, petitioner.

NOTICE is hereby given that the abovenamed petitioner has been adjudged insolvent on 8th May 1936, and that he has been directed to apply for his discharge within one year from that day.

K. BANERJI, Sub-Judge.

Asansol, the 19th June 1936. (1309—1)

In the Court of the Sub-Judge at Asansol.

INSOLVENCY CASE No. 13 OF 1936.

Sreelal Chamaria of 114-1, Cotton Street, Calcutta, petitioner.

NOTICE is hereby given that the insolvency application filed by the abovenamed petitioner on 5th May 1936 has been admitted, and that the Court has fixed 17th July 1936 for hearing thereof.

K. BANERJI, Sub-Judge.

Asansol, the 20th June 1936. (1310—1)

NOTICE TO CREDITORS OF THE DATE OF HEARING OF AN INSOLVENCY PETITION.

Section 19 of the Provincial Insolvency Act, V of 1920.

In the Court of the District Judge at Chittagong.

INSOLVENCY APPLICATION No. 18 OF 1936.

WHEREAS debtor Siddique Ahamed, son of Moberak Ali, of Pataknagar, police-station Fatickchery, post office Fatickchery, district Chittagong, has applied to this Court by a petition, dated 23rd day of May 1936, to be declared an insolvent under the Provincial Insolvency Act, V of 1920, this is to give notice that the Court has fixed the 30th day of July 1936 for the hearing of the aforesaid petition and the examination of the debtor.

J. GEORGE, *for* District Judge.

Chittagong, the 29th June 1936. (1362—1)

NOTICE TO CREDITORS OF APPLICATION FOR DISCHARGE.

Section 41(1) of the Provincial Insolvency Act, V of 1920.

In the Court of the District Judge at Chittagong.

INSOLVENCY CASE No. 43 OF 1931.

Abdul Hamid, son of late Hashim Ali, of Dhurung, police-station Fatickchery, Chittagong, debtor, applicant.

TAKE notice that the abovenamed insolvent has applied at the Court for his discharge, and that the Court has fixed the 28th day of July 1936 at 10-30 o'clock for hearing the application.

Dated this 27th day of June 1936.

H. G. WAIGHT, District Judge.

(1363—1)

In the Court of the District Judge of Dacca.

INSOLVENCY CASE No. 6 OF 1936.

The firm styled Ganga Sagar Anandamohan Harimohan Brojomohan Saha, carrying on business at Chakbazar Barakatra Lane, police-station Lalbagh, district Dacca, petitioning creditor,

versus

The firm styled Jogendramohan Manindramohan Jnanendramohan, Surendramohan and Upendramohan Saha and the personal properties of the active managers, viz., (1) Manindramohan Saha, (2) Upendramohan Saha, sons of late Krishna Chandra Saha and (3) Khagendramohan Saha, son of late Jogendramohan Saha, residents of Bhagair, police-station Keraniganj, district Dacca, debtors.

WHEREAS the abovenamed petitioning creditors have applied to this Court to adjudge the abovenamed debtors insolvents, the Court has fixed the 18th July 1936 for the hearing of the aforesaid petition, objection of the debtors and the creditors.

W. McC. SHARPE, District Judge.

Dacca, the 24th June 1936. (1312—1)

In the Court of the District Judge at Darjeeling.

INSOLVENCY CASE No. 17 OF 1930.

H. H. Cummins of Darjeeling, petitioner.

WHEREAS the abovenamed petitioner was adjudged an insolvent by an order of this Court, dated 31st May 1930, the Court has fixed provisionally the 15th day of August 1936 for hearing of the petition for final discharge at Darjeeling. Any one desiring to oppose the matter may appear in person or by a duly authorised agent before the District Judge at Darjeeling on the date fixed at 10-30 o'clock forenoon.

B. C. SEN, Ex-officio Registrar.

Darjeeling, the 24th June 1936. (1311—1)

In the Court of the District Judge at Darjeeling.

INSOLVENCY CASE No. 32 OF 1935.

Dhanbahadur Gurung of Gayabari, district Darjeeling, petitioner.

WHEREAS the abovenamed petitioner was adjudged an insolvent by an order of this Court on the 19th November 1935, the Court has fixed 15th day of July 1936 for provisional hearing of the petition for final discharge at Darjeeling. Any one desiring to oppose the matter may appear in person or by a duly authorised agent before the District Judge at Darjeeling on the date fixed at 10-30 o'clock forenoon.

B. C. SEN, Ex-officio Registrar.

Darjeeling, the 30th June 1936. (1366—1)

In the Court of the District Judge of Faridpur.

INSOLVENCY CASE No. 60 OF 1935.

Jagabandhu Mistri, son of late Abhaya Charan Mistri, of Sashikar, police-station Kalkini, district Faridpur, debtor-petitioner.

NOTICE is hereby given that the abovenamed petitioner has been adjudged insolvent by an order of this Court, dated the 24th June 1936, and directed to apply for final discharge within six months.

K. B. ROY, District Judge.

Faridpur, the 26th June 1936. (1300—1)

In the Court of the District Judge of Faridpur.

INSOLVENCY CASE No. 17 OF 1936.

Hari Prosad Bhoumik, son of Ramani Mohan Bhoumik, of Choumukha, police-station Nagarkanda, district Faridpur, creditor-petitioner,

versus

(1) Abdul Majid Molla and (2) Abdul Wajed Molla, sons of late Felu Molla, (3) Sheik Tofajaddi, son of late Sheik Balai, of Chandkhola, police-station Nagarkanda, district Faridpur, debtors, opposite party.

NOTICE is hereby given that the abovenamed debtor-petitioners have been adjudged insolvents by an order of this Court, dated 20th June 1936, and directed to apply for final discharge within six months

K. B. ROY, District Judge.

Faridpur, the 26th June 1936. (1301—1)

In the Court of the District Judge of Hooghly.

INSOLVENCY PETITION No. 54 OF 1935.

NOTICE is hereby given that Shaikh Abdul Karim son of late Shaikh Gopal, of Gopalnagar, thana Balagori, district Hooghly, was on the 9th May 1936 adjudged an insolvent. The 8th August 1936 has been fixed for framing a schedule and creditors are required to prove their claims on that day.

S. SEN, District Judge.

Chinsura, the 26th June 1936. (1302—1)

In the Court of the District Judge of Hooghly.

NOTICE is hereby given, under clause (2) of section 12 of the Provincial Insolvency Act, V of 1920, to his creditors that the insolvency petition of Ram Chandra Sadhukhan, son of late Rakhal Ch. Sadhukhan, of Sheoraphuli, thana Serampore, district Hooghly, has been admitted by this Court as No. 53 of 1936, and that the 18th July 1936 has been fixed for the hearing thereof.

S. SEN, District Judge.

Chinsura, the 30th June 1936. (1357—1)

In the Court of the District Judge of Hooghly.

NOTICE is hereby given, under clause (2) of section 12 of the Provincial Insolvency Act, V of 1920, to his creditors that the insolvency petition of Madaneswar Chatterji, son of late Ramnath Chatterji, of Utterpara, thana Uttorpara, district Hooghly, has been admitted by this Court as No. 55 of 1936, and that the 18th July 1936 has been fixed for the hearing thereof.

S. SEN, District Judge.

Chinsura, the 30th June 1936. (1358—1)

In the Court of the District Judge of Hooghly.

NOTICE is hereby given, under clause (2) of section 12 of the Provincial Insolvency Act, V of 1920, to his creditors that the insolvency petition of Chedilal Bhakat, son of Kesar Ram Bhakat, of Sheoraphuli, thana Serampore, district Hooghly, has been admitted by this Court as No. 54 of 1936, and that the 25th July 1936 has been fixed for the hearing thereof.

S. SEN, District Judge.

Chinsura, the 30th June 1936. (1360—1)

In the Court of the District Judge of Hooghly.

NOTICE is hereby given, under clause (2) of section 12 of the Provincial Insolvency Act, V of 1920, to his creditors that the insolvency petition of Shaikh Abdul Matleb Sircar, son of Shaikh Abdul Karim Sircar, of Chelua, thana Dhaniakhali, district Hooghly, has been admitted by this Court as No. 52 of 1936, and that the 25th July 1936 has been fixed for the hearing thereof.

S. SEN, District Judge.

Chinsura, the 30th June 1936. (1361—1)

In the Court of the District Judge of Hooghly.

INSOLVENCY PETITION No. 33 OF 1936.

NOTICE is hereby given that Mr. S. A Cordell of Bandel, thana Cainsura, district Hooghly, was on the 27th June 1936 adjudged an insolvent. The 26th September 1936 has been fixed for framing a schedule and creditors are required to prove their claims on that day.

S. SEN, District Judge.

Chinsura, the 2nd July 1936. (1377—1)

In the Court of the District Judge of Jalpaiguri.

INSOLVENCY CASE No. 6 OF 1936.

LAKMI CHAND AGARWALA, son of late Kissanlal Agarwala, of Jalpaiguri town, police-station and district Jalpaiguri, has applied to this Court to be adjudged insolvent. The 20th day of July 1936 has been fixed for examination of the petitioner at Jalpaiguri.

[ILLEGIBLE], Registrar *for* District Judge.

Jalpaiguri, the 26th June 1936. (1297—1)

NOTICE TO CREDITORS OF THE DATE OF HEARING OF AN INSOLVENCY PETITION.

In the Court of the District Judge of Midnapore.

INSOLVENCY APPLICATION No. 58 OF 1936.

WHEREAS Sristidhar Jana, son of late Nandaram Jana, of Durmuth, pargana Majnamutha, thana Contai, district Midnapore, creditor, has applied to this Court by a petition, dated the 17th June 1936, to declare Barendra Nath Maity, son of late Kali Prasanna Maity, of Durmuth, pargana Majnamutha, thana Contai, district Midnapore, debtor, an insolvent under the Provincial Insolvency Act, V of 1920, this is to give the creditors notice that the Court has fixed the 25th day of July 1936 for the hearing of the aforesaid petition.

S. K. HALDAR, District Judge.

Midnapore, the 26th June 1936. (1303 -1)

NOTICE TO CREDITORS OF THE DATE OF HEARING OF AN INSOLVENCY PETITION.

In the Court of the District Judge of Midnapore.

INSOLVENCY APPLICATION No. 53 OF 1936.

WHEREAS G. Mohan Rao and two others, creditors, of New Settlement, police-station Khargpur, district Midnapore, have applied to this Court by a petition, dated 25th May 1936, to declare N. Kour Swamy Pille, clerk, Store Audit, B. N. Railway, Khargpur, district Midnapore, debtor, an insolvent under the Provincial Insolvency Act, V of 1920, this is to give the creditors notice that the Court has fixed the 25th day of July 1936 for the hearing of the aforesaid petition.

S. K. HALDAR, District Judge.

Midnapore, the 27th June 1936. (1353—1)

NOTICE TO CREDITORS OF THE DATE OF HEARING OF AN INSOLVENCY PETITION.

In the Court of the District Judge of Midnapore.

INSOLVENCY APPLICATION No. 57 OF 1936.

WHEREAS Gopinath Pradhan, son of Ram Prashad Pradhan, and another, of Alagarput, police-station Contai, district Midnapore, creditors, have applied to this Court by a petition, dated the 13th June 1936, to declare Sarbeswar Panigrahi of Ghatua, pargana Kecramal, thana Contai, district Midnapore, debtor, an insolvent under the Provincial Insolvency Act, V of 1920, this is to give the creditors notice that the Court has fixed the 25th day of July 1936 for the hearing of the aforesaid petition.

S. K. HALDAR, District Judge.

Midnapore, the 30th June 1936. (1356—1)

In the Court of the District Judge of Murshidabad.

INSOLVENCY CASE No. 32 OF 1932.

In the matter of Bhupendra Kumar Sarkar, son of late Brojendra Kumar Sarkar, of Berhampore, police-station Berhampore town, district Murshidabad, debtor-petitioner.

NOTICE is hereby given to all concerned that the abovenamed debtor, who was adjudged an insolvent by an order of this Court, dated the 17th September 1932, has submitted a scheme of composition and arrangement of his affairs and that the 18th day of July 1936 has been fixed for the consideration of the said scheme.

G. B. SYNGE, District Judge.

Berhampore, the 27th June 1936. (1298—1)

In the Court of the District Judge of Mymensingh.

INSOLVENCY CASE No. 19 OF 1936.

Kishoreganj Loan Office Co., Ltd., creditor-petitioner,

versus

Shib Dulare Shukul, debtor, opposite party.

ON the application of Kishoreganj Loan Office Co., Ltd., a creditor, against his debtors Shib Dulare Shukul and Trilochan Shukul, sons of late Shaheb Lal Shukul, residing at Gouri, police-station Bara, district Unao, ordinarily residing at Atharabari, police-station Iswarganj, district Mymensingh, for adjudicating the said debtors insolvents, notice is hereby given to all their creditors that the said petition has been admitted by this Court, and that the 23rd day of July 1936 has been fixed for hearing the case.

S. M. MASIH, District Judge.

Mymensingh, the 29th June 1936. (1364—1)

In the Court of the District Judge of Nadia.

INSOLVENCY CASE No. 43 OF 1935.

Kalu Sadhu Khan, son of late Amir Sadhu Khan, of Sarabpur, police-station Chakdaha, district Nadia, petitioner.

NOTICE is hereby given, under section 41 of the Provincial Insolvency Act, V of 1920, to his creditors that the abovenamed insolvent has applied for discharge and that 25th July 1936 has been fixed for the hearing thereof.

A. M. AHMAD, District Judge.

Krishnagar, the 30th June 1936. (1365—1)

In the Court of the District Judge of Noakhali.

INSOLVENCY CASE No. 9 OF 1936.

NOTICE is hereby given that (1) Nowabjan Miah and (2) Hanu Miah, sons of late Ahmed Ali Miah, of Alaiyarpur, post-office Daganbhuiya, police-station Feni, in the district of Noakhali, having applied to this Court for being adjudged insolvents, the 25th July 1936 has been set down for hearing of the application.

J. N. SEN, *for* District Judge.

Noakhali, the 29th June 1936. (1354—1)

In the Court of the District Judge of Rangpur.

INSOLVENCY CASE No. 8 OF 1936.

ON the application of the debtor Rup Chand Barman, son of late Hauria Barman, of Tajhat, police-station Kotwali, in Rangpur, for being adjudged an insolvent, the 18th day of July 1936 has been fixed for hearing the aforesaid petition and the examination of the debtor.

P. C. DE, District Judge.

Rangpur, the 27th June 1936. (1313—1)

ORDER ANNULLING ADJUDICATION.

Section 43 of the Provincial Insolvency Act, V of 1920.

In the 4th Court of the Sub-Judge at Alipore.

INSOLVENCY APPLICATION No. 68 OF 1934.

Md. Ekramuddin Khan, applicant.

WHEREAS Md. Ekramuddin Khan of 12, Chetal Hat Road, Alipore, 24-Parganas, debtor, does not proceed with his application for discharge, it is ordered that the order of adjudication, dated 2nd October 1934, against the debtor be and the same is hereby annulled.

Dated this 14th day of May 1936.

P. N. CHAUDHURI, Sub-Judge.

(1314—1)

NOTICE TO CREDITORS OF APPLICATION FOR DISCHARGE.

Section 41 (1) of the Provincial Insolvency Act, V of 1920.

In the 4th Court of the Sub-Judge at Alipore.

INSOLVENCY CASE No. 267 OF 1935.

Frederick George Sheldrake of 27A, Haris Mukherjee Road, 24-Parganas, applicant.

TAKE notice that the abovenamed insolvent has applied at the Court for his discharge, and that the Court has fixed the 27th day of July 1936 at 11 o'clock for hearing the application.

Dated this 22nd day of June 1936.

P. N. CHAUDHURI, Sub-Judge.

(1315—1)

NOTICE TO CREDITORS OF APPLICATION FOR DISCHARGE.

Section 41 (1) of the Provincial Insolvency Act, V of 1920.

In the 4th Court of the Sub-Judge at Alipore.

INSOLVENCY CASE No. 284 OF 1935.

E. O. Johnson of 40, Gorachand Road, police-station Beniapukur, 24-Parganas, applicant.

TAKE notice that the abovenamed insolvent has applied at the Court for his discharge, and that the Court has fixed the 27th day of July 1936 at 11 o'clock for hearing the application.

Dated this 22nd day of June 1936.

P. N. CHAUDHURI, Sub-Judge.

(1316—1)

NOTICE TO CREDITORS OF APPLICATION FOR DISCHARGE.

Section 41 (1) of the Provincial Insolvency Act, V of 1920.

In the 4th Court of the Sub-Judge at Alipore.

INSOLVENCY CASE No. 291 OF 1935.

Wohiuddin Ahmad of 31, Ekbalpore Lane, 24-Parganas, applicant.

TAKE notice that the abovenamed insolvent has applied at the Court for his discharge, and that the Court has fixed the 27th day of July 1936 at 11 o'clock for hearing the application.

Dated this 22nd day of June 1936.

P. N. CHAUDHURI, Sub-Judge.

(1317—1)

NOTICE TO CREDITORS OF APPLICATION FOR DISCHARGE.

Section 41 (1) of the Provincial Insolvency Act, V of 1920.

In the 4th Court of the Sub-Judge at Alipore.

INSOLVENCY CASE No. 314 OF 1935.

Saraju Ahir of 36, Belgachia Road, police-station Chitpore, 24-Parganas, applicant.

TAKE notice that the abovenamed insolvent has applied at the Court for his discharge, and that the Court has fixed the 27th day of July 1936 at 11 o'clock for hearing the application.

Dated this 22nd day of June 1936.

P. N. CHAUDHURI, Sub-Judge.

(1318—1)

NOTICE TO CREDITORS OF APPLICATION FOR DISCHARGE

Section 41A(1) of the Provincial Insolvency Act, V of 1920.

In the 4th Court of the Sub-Judge at Alipore.

INSOLVENCY CASE No 330 of 1935

Jagannath Pal of 65/1, Pramanick Ghat Road, Halderpara, Baranagore, 24 Parganas, applicant

TAKE notice that the abovenamed insolvent has applied at the Court for his discharge, and that the Court has fixed the 27th day of July 1936 at 11 o'clock for hearing the application.

Dated this 22nd day of June 1936

P. N. CHAUDHURI, Sub-Judge.

(1319—1)

In the 4th Court of the Sub-Judge of 24-Parganas.

INSOLVENCY CASE No. 256 OF 1936.

Shaik Ramzan of 19, Alipore Road, Chetla, 24-Parganas, applicant

To Noor Mohammad Khan of 19/1, Russa Road, Tollygunge, Calcutta, and others, creditors.

ON the 15th day of June 1936 it was ordered that the matter of the petition of the applicant be heard on the 27th day of July 1936, and that the said applicant do attend to be examined by this Court on that date.

P. N CHAUDHURI, Sub-Judge.

Alipore, the 22nd June 1936 (1320—1)

In the 4th Court of the Sub-Judge of 24-Parganas.

INSOLVENCY CASE No. 258 OF 1936

Monmohan Das of 6, Harish Chandra Pal Lane, police-station Cossipore, 24 Parganas, applicant

To Basanta Kumari Debi and Satyabala Debi of 39, Nilmoney Mitra Street, Calcutta, and others, creditors

ON the 16th day of June 1936 it was ordered that the matter of the petition of the applicant be heard on the 27th day of July 1936, and that the said applicant do attend to be examined by this Court on that date

P N. CHAUDHURI, Sub-Judge.

Alipore, the 22nd June 1936. (1321—1)

In the 4th Court of the Sub-Judge of 24-Parganas.

INSOLVENCY CASE No. 259 OF 1936

Kishori Mohan Mondal of 21, Mohun Haldar Street, Calcutta, 24 Parganas, applicant

To Ram Krishna Rakshit Kalidas Rakshit of 4, Bartola Street Calcutta and others, creditors.

ON the 11th day of June 1936 it was ordered that the matter of the petition of the applicant be heard on the 27th day of July 1936, and that the said applicant do attend to be examined by this Court on that date

P N. CHAUDHURI, Sub-Judge.

Alipore, the 22nd June 1936. (1322—1)

In the 4th Court of the Sub-Judge of 24-Parganas.

INSOLVENCY CASE No. 260 OF 1936.

Gopi Chamar of Gouripore, Pal Bagan, police-station Naihati, 24 Parganas, applicant

To Nuran Khan Kabuli of Gouripore Bazar, post office Gorifa, 24 Parganas, and others, creditors

ON the 17th day of June 1936 it was ordered that the matter of the petition of the applicant be heard on the 27th day of July 1936, and that the said applicant do attend to be examined by this Court on that date

P N CHAUDHURI, Sub Judge.

Alipore, the 22nd June 1936. (1323—1)

In the 4th Court of the Sub-Judge of 24-Parganas.

INSOLVENCY CASE No. 261 OF 1936.

Jagannath Bhuya of 63, Hazra Road, police-station Tollygunge, 24 Parganas, applicant.

To Santram of 108, Hazra Road, Tollygunge, Calcutta, creditor.

ON the 18th day of June 1936 it was ordered that the matter of the petition of the applicant be heard on the 3rd day of August 1936, and that the said applicant do attend to be examined by this Court on that date.

P. N CHAUDHURI, Sub Judge.

Alipore, the 26th June 1936. (1324—1)

In the 4th Court of the Sub-Judge of 24-Parganas.

INSOLVENCY CASE No 262 OF 1936

Sm Basanta Kumari Mitra, widow of late Satish Ch. Mitra, of 96, Ashutosh Mukherjee Road, police station Bhowanipur, 24-Parganas, applicant.

To Sadoruddin Dost Mahammad Alla Boksha of 40, Ratu Sarkar Lane, Calcutta, and others, creditors.

ON the 13th day of June 1936 it was ordered that the matter of the petition of the applicant be heard on the 27th day of July 1936, and that the said applicant do attend to be examined by this Court on that date.

P. N. CHAUDHURI, Sub-Judge.

Alipore, the 22nd June 1936 (1325—1)

In the 4th Court of the Sub-Judge of 24-Parganas.

INSOLVENCY CASE No 264 of 1936.

Sayed Afsaruddin Ahamad *alias* M A Gani of 2, Tanti Bagan Road, police station Bemapukur, 24-Parganas, applicant

To Sk Enayet of 49, Lower Circular Road, Calcutta, and others, creditors

ON the 15th day of June 1936 it was ordered that the matter of the petition of the applicant be heard on the 27th day of July 1936, and that the said applicant do attend to be examined by this Court on that date.

P. N CHAUDHURI, Sub-Judge.

Alipore, the 22nd June 1936. (1326—1)

In the 4th Court of the Sub-Judge of 24-Parganas.

INSOLVENCY CASE No 265 OF 1936

Puran Bahadur Nepali of Fakir Ghat Road, Khardah, 24 Parganas, applicant

To Sadah Sha of Khardah Bagan, Khardah, 24-Parganas, and others, creditors

ON the 16th day of June 1936 it was ordered that the matter of the petition of the applicant be heard on the 27th day of July 1936, and that the said applicant do attend to be examined by this Court on that date.

P. N CHAUDHURI, Sub-Judge.

Alipore, the 22nd June 1936. (1327—1)

In the 4th Court of the Sub-Judge of 24-Parganas.

INSOLVENCY CASE No. 269 OF 1936.

Radha Gobinda Sinha of 24, Singhee Bazar, Calcutta, creditor, applicant.

To Sachchidananda Mitra of 56, Sambhu Babu Lane, Entally, 24-Parganas, debtor.

ON the 17th day of June 1936 it was ordered that the matter of the petition of the applicant be heard on the 20th day of July 1936, and that the said applicant do attend to be examined by this Court on that date.

P. N. CHAUDHURI, Sub-Judge.

Alipore, the 22nd June 1936. (1328—1)

In the 4th Court of the Sub-Judge of 24-Parganas.

INSOLVENCY CASE No. 270 OF 1936.

Shaik Wali Mahomed of 7-2, Gas Street, police-station Beliaghata, 24-Parganas, applicant.

To Khaja Mahamed Safi of 23, Mechuabazar Street, Calcutta, and others, creditors.

ON the 18th day of June 1936 it was ordered that the matter of the petition of the applicant be heard on the 3rd day of August 1936, and that the said applicant do attend to be examined by this Court on that date.

P. N. CHAUDHURI, Sub-Judge.

Alipore, the 20th June 1936. (1329—1)

In the 4th Court of the Sub-Judge of 24-Parganas.

INSOLVENCY CASE No. 271 OF 1936.

Khapri Kahar of Gouripore, police-station Naihaty, 24-Parganas, applicant.

To Supnarain Singh of Gouripore, Naihaty, 24-Parganas, and others, creditors.

ON the 18th day of June 1936 it was ordered that the matter of the petition of the applicant be heard on the 3rd day of August 1936, and that the said applicant do attend to be examined by this Court on that date.

P. N. CHAUDHURI, Sub-Judge.

Alipore, the 26th June 1936. (1330—1)

In the 4th Court of the Sub-Judge of 24-Parganas.

INSOLVENCY CASE No. 272 OF 1936.

Bijoy Krishna Ghosh, Santosh Kumar Ghosh, Surendranath Ghosh and Jatindra Nath Ghosh of Kantalpara, police-station Naihaty, 24-Parganas, applicants.

To Mohit Kumar Banerjee of Kantalpara, Naihaty, 24-Parganas, and others, creditors.

ON the 18th day of June 1936 it was ordered that the matter of the petition of the applicants be heard on the 3rd day of August 1936, and that the said applicants do attend to be examined by this Court on that date.

P. N. CHAUDHURI, Sub-Judge.

Alipore, the 26th June 1936. (1331—1)

In the 4th Court of the Sub-Judge of 24-Parganas.

INSOLVENCY CASE No. 273 OF 1936.

Amulya Charan Khanra of Bahirgarh, Budge Budge, 24-Parganas, applicant.

To Pulin Behary Pal of Bahirgarh, Manshatala, Budge Budge, and others, creditors.

ON the 18th day of June 1936 it was ordered that the matter of the petition of the applicant be heard on the 3rd day of August 1936, and that the said applicant do attend to be examined by this Court on that date.

P. N. CHAUDHURI, Sub-Judge.

Alipore, the 26th June 1936. (1332—1)

In the 4th Court of the Sub-Judge of 24-Parganas.

INSOLVENCY CASE No. 277 OF 1936.

Albert Sutton Green of Rajarbazar, Tram Depot, Lower Circular Road, 24-Parganas, applicant.

To D. Nissim, C/o Davidson & Co., Lindsay Street, Calcutta, and others, creditors.

ON the 20th day of June 1936 it was ordered that the matter of the petition of the applicant be heard on the 3rd day of August 1936, and that the said applicant do attend to be examined by this Court on that date.

P. N. CHAUDHURI, Sub-Judge.

Alipore, the 26th June 1936. (1333—1)

ORDER OF ADJUDICATION.

Section 27 of the Provincial Insolvency Act, V of 1920.

In the 4th Court of the Sub-Judge at Alipore.

INSOLVENCY APPLICATION No. 441 OF 1935.

PURSUANT to a petition, dated the 7th September 1935, filed by Reza Hossain of Battikal bustee, police-station Garden Reach, 24-Parganas, debtor, and on the application of the debtor himself and on reading his application and hearing his pleader, it is ordered that the debtor be and the said debtor is hereby adjudged insolvent.

It is further ordered that the debtor do apply for his discharge within 15th June 1937.

Dated this 15th day of June 1936.

P. N. CHAUDHURI, Sub-Judge.

(1334—1)

ORDER OF ADJUDICATION.

Section 27 of the Provincial Insolvency Act, V of 1920.

In the 4th Court of the Sub-Judge at Alipore.

INSOLVENCY APPLICATION No. 546 OF 1935.

PURSUANT to a petition, dated the 11th December 1935, filed by N. J. R. Moses of 16, Convent Road, Entally, 24-Praganas, debtor, and on the application of the debtor himself and on reading his application and hearing his pleader, it is ordered that the debtor be and the said debtor is hereby adjudged insolvent.

It is further ordered that the debtor do apply for his discharge within 15th April 1937.

Dated this 15th day of June 1936.

P. N. CHAUDHURI, Sub-Judge.

(1335—1)

ORDER OF ADJUDICATION.

Section 27 of the Provincial Insolvency Act, V of 1920.

In the 4th Court of the Sub-Judge at Alipore.

INSOLVENCY APPLICATION No. 46 OF 1936.

PURSUANT to a petition, dated the 5th February 1936, filed by Bhagaban Barick of 121, Kasba Road police-station Tollygunge, 24-Parganas, debtor, and on the application of the debtor himself and on reading his application and hearing his pleader, it is ordered that the debtor be and the said debtor is hereby adjudged insolvent.

It is further ordered that the debtor do apply for his discharge within 15th May 1937.

Dated this 15th day of June 1936.

P. N. CHAUDHURI, Sub-Judge.

(1336—1)

ORDER OF ADJUDICATION.

Section 27 of the Provincial Insolvency Act, V of 1920.

In the 4th Court of the Sub-Judge at Alipore.

INSOLVENCY APPLICATION No. 48 OF 1936.

PURSUANT to a petition, dated the 7th February 1936, filed by Robindra Mohan Rakshit of 44, Harish Neogy Road police-station Manicktola, 24-Parganas, debtor, and on the application of the debtor himself and on reading his application and hearing his pleader, it is ordered that the debtor be and the said debtor is hereby adjudged insolvent.

It is further ordered that the debtor do apply for his discharge within 20th March 1937.

Dated this 22nd day of June 1936.

P. N. CHAUDHURI, Sub-Judge.

(1337—1)

ORDER OF ADJUDICATION.

Section 27 of the Provincial Insolvency Act, V of 1920.

In the 4th Court of the Sub-Judge at Alipore.

INSOLVENCY APPLICATION No. 61 OF 1936

PURSUANT to a petition, dated the 13th February 1936, filed by Arjun Paria of 5, Justice Dwarkanath Road, Bhowanipore 24-Parganas, debtor, and on the application of the debtor himself and on reading his application and hearing his pleader, it is ordered that the debtor be and the said debtor is hereby adjudged insolvent.

It is further ordered that the debtor do apply for his discharge within 22nd January 1937.

Dated this 22nd day of June 1936.

P. N. CHAUDHURI, Sub-Judge.

(1338—1)

ORDER OF ADJUDICATION.

Section 27 of the Provincial Insolvency Act, V of 1920

In the 4th Court of the Sub-Judge at Alipore.

INSOLVENCY APPLICATION No. 83 OF 1936.

PURSUANT to a petition, dated the 20th February 1936, filed by Ram Prasad Chamar of 212, Bagmari Road, police-station Manicktola 24-Parganas, debtor, and on the application of the debtor himself and on reading his application and hearing his pleader, it is ordered that the debtor be and the said debtor is hereby adjudged insolvent.

It is further ordered that the debtor do apply for his discharge within 22nd February 1937.

Dated this 22nd day of June 1936.

P. N. CHAUDHURI, Sub-Judge.

(1339—1)

ORDER OF ADJUDICATION

Section 27 of the Provincial Insolvency Act, V of 1920.

In the 4th Court of the Sub-Judge at Alipore.

INSOLVENCY APPLICATION No. 86 OF 1936.

PURSUANT to a petition, dated the 21st February 1936, filed by Abid Rahman of 13, Phulbagan Road, police-station Entally, 24-Parganas, debtor, and on the application of the debtor himself, and on reading his application and hearing his pleader, it is ordered that the debtor be and the said debtor is hereby adjudged insolvent.

It is further ordered that the debtor do apply for his discharge within 10th January 1937.

Dated this 15th day of June 1936.

P. N. CHAUDHURI, Sub-Judge.

(1340—1)

ORDER OF ADJUDICATION.

Section 27 of the Provincial Insolvency Act, V of 1920.

In the 4th Court of the Sub-Judge at Alipore.

INSOLVENCY APPLICATION No. 101 OF 1936

PURSUANT to a petition dated the 2nd March 1936, filed by R. T. Beresworth of 25, Ekbalpore Road, 24-Parganas, debtor, and on the application of the debtor himself and on reading his applicat on and hearing his pleader, it is ordered that the debtor be and the said debtor is hereby adjudged insolvent.

It is further ordered that the debtor do apply for his discharge within 23rd March 1937.

Dated this 22nd day of June 1936.

P. N. CHAUDHURI, Sub-Judge.

(1341—1)

ORDER OF ADJUDICATION.

Section 27 of the Provincial Insolvency Act, V of 1920.

In the 4th Court of the Sub-Judge at Alipore.

INSOLVENCY APPLICATION No. 110 OF 1936.

PURSUANT to a petition, dated the 7th March 1936, filed by Birendranath Das of 13, Middle Road Entally, 24-Parganas, debtor, and on the application of the debtor himself and on reading his application and hearing his pleader, it is ordered that the debtor be and the said debtor is hereby adjudged insolvent.

It is further ordered that the debtor do apply for his discharge within 15th January 1937.

Dated this 15th day of June 1936.

P. N. CHAUDHURI, Sub-Judge.

(1342—1)

ORDER OF ADJUDICATION.

Section 27 of the Provincial Insolvency Act, V of 1920.

In the 4th Court of the Sub-Judge at Alipore.

INSOLVENCY APPLICATION No. 113 OF 1936.

PURSUANT to a petition dated the 9th March 1936, filed by Nirmal Kumar Bose of 17, Kundu Lane, Belgachia, police-station Manicktolla 24 Parganas, debtor, and on the application of the debtor himself and on reading his applicat on and hearing his pleader, it is ordered that the debtor be and the said debtor is hereby adjudged insolvent.

It is further ordered that the debtor do apply for his discharge within 10th January 1937.

Dated this 15th day of June 1936.

P. N. CHAUDHURI, Sub-Judge.

(1343—1)

ORDER OF ADJUDICATION.

Section 27 of the Provincial Insolvency Act, V of 1920.

In the 4th Court of the Sub-Judge at Alipore.

INSOLVENCY APPLICATION No. 114 OF 1936.

PURSUANT to a petition dated the 7th March 1936, filed by Hurrai Dutta of 238, Kalighat Road, police-station Bhowanipore, 24-Parganas, debtor, and on the application of the debtor himself and on reading his application and hearing his pleader, it is ordered that the debtor be and the said debtor is hereby adjudged insolvent.

It is further ordered that the debtor do apply for his discharge within 15th January 1937.

Dated this 15th day of June 1936.

P. N. CHAUDHURI, Sub-Judge.

(1344—1)

ORDER OF ADJUDICATION.

Section 27 of the Provincial Insolvency Act, V of 1920.

In the 4th Court of the Sub-Judge at Alipore.

INSOLVENCY APPLICATION No. 116 OF 1936.

PURSUANT to a petition, dated the 10th March 1936, filed by Amir Ali of Latghara police-station Metiaburuz, 24-Parganas debtor, and on the application of the debtor himself and on reading his application and hearing his pleader, it is ordered that the debtor be and the said debtor is hereby adjudged insolvent.

It is further ordered that the debtor do apply for his discharge within 25th February 1937.

Dated this 22nd day of June 1936.

P. N. CHAUDHURI, Sub-Judge.

(1345—1)

ORDER OF ADJUDICATION.

Section 27 of the Provincial Insolvency Act, V of 1920.

In the 4th Court of the Sub-Judge at Alipore.

INSOLVENCY APPLICATION No. 117 OF 1936.

PURSUANT to a petition, dated the 10th March 1936, filed by Narayan Pashi of Khardah, 24-Parganas, debtor, and on the application of the debtor himself and on reading his application and hearing his pleader, it is ordered that the debtor be and the said debtor is hereby adjudged insolvent.

It is further ordered that the debtor do apply for his discharge within 22nd January 1937.

Dated this 22nd day of June 1936.

P. N. CHAUDHURI, Sub-Judge.

(1346—1)

ORDER OF ADJUDICATION.

Section 27 of the Provincial Insolvency Act, V of 1920.

In the 4th Court of the Sub-Judge at Alipore.

INSOLVENCY APPLICATION No. 136 OF 1936.

PURSUANT to a petition dated the 23rd March 1936, filed by V. R Hannah of 76 Traffic Quarters Sealdah, 24-Parganas, debtor and on the application of the debtor himself and on reading his application and hearing his pleader, it is ordered that the debtor be and the said debtor is hereby adjudged insolvent.

It is further ordered that the debtor do apply for his discharge within 10th June 1937.

Dated this 15th day of June 1936.

P. N. CHAUDHURI, Sub-Judge.

(1347—1)

ORDER OF ADJUDICATION

Section 27 of the Provincial Insolvency Act, V of 1920.

In the 4th Court of the Sub-Judge at Alipore.

INSOLVENCY APPLICATION No. 140 OF 1936.

PURSUANT to a petition, dated 28th March 1936, filed by W. P Bunten of 220D, Traffic Quarters, Belgachia, 24 Parganas, debtor, and on the application of the debtor himself and on reading his application and hearing his pleader, it is ordered that the debtor be and the said debtor is hereby adjudged insolvent

It is further ordered that the debtor do apply for his discharge within 22nd May 1937 from this date.

Dated this 22nd day of June 1936

P. N. CHAUDHURI, Sub-Judge.

(1348—1)

ORDER OF ADJUDICATION.

Section 27 of the Provincial Insolvency Act, V of 1920.

In the 4th Court of the Sub-Judge at Alipore.

INSOLVENCY APPLICATION No. 156 OF 1936

PURSUANT to a petition, dated 8th April 1936, filed by Bijon Raut *alias* Bijan Goala of 7, Chaulpatty Road, Behaghata, 24 Parganas, debtor, and on the application of the debtor himself and on reading his application and hearing his pleader, it is ordered that the debtor be and the said debtor is hereby adjudged insolvent

It is further ordered that the debtor do apply for his discharge within 15th January 1937

Dated this 15th day of June 1936

P. N. CHAUDHURI, Sub-Judge.

(1349—1)

ORDER OF ADJUDICATION.

Section 27 of the Provincial Insolvency Act, V of 1920.

In the 4th Court of the Sub-Judge at Alipore.

INSOLVENCY APPLICATION No. 173 OF 1936.

PURSUANT to a petition, dated 18th April 1936, filed by Dhirendranath Mullick of 81, Jessore Road, Fullbagan, Dum Dum, 24-Parganas, debtor, and on the application of the debtor himself and on reading his applicat on and hearing his pleader, it is ordered that the debtor be and the said debtor is hereby adjudged insolvent.

It is further ordered that the debtor do apply for his discharge within 15th January 1937.

Dated this 15th day of June 1936.

P. N. CHAUDHURI, Sub-Judge.

(1350—1)

In the Court of the District Judge of 24-Parganas.

INSOLVENCY CASE No. 20 OF 1936.

Miss A. M Kitchner of 57, Chowringhee Road, Calcutta, creditor, applicant.

To Dr S. Ram of 124B, Russa Road, 24 Parganas, debtor.

ON the 18th day of June 1936 it was ordered that the matter of the petition of the applicant be heard on the 20th day of July 1936, and that the said applicant do attend to be examined by this Court on that date.

T. H. ELLIS, District Judge.

Alipore, the 2nd July 1936

(1378—1)

In the Court of the District Judge of Tippera.

INSOLVENCY CASE No. 12 OF 1936.

NOTICE is hereby given to the creditors of Gagan Chandra Deb Nath, son of late Budhai Deb Nath, of Baghaura, pargana Nurnagar, police-station Nabinagar, district Tippera, that the said debtor Gagan Chandra Deb Nath has filed an application in this Court for being adjudged an insolvent and that 8th day of August 1936 has been fixed for hearing of the application.

R. C. BANARJI, District Judge.

Comilla, the 3rd July 1936,

(1379—1).

APPLICATIONS are invited for the post of a Probationer in the Bankura Collectorate in the scale of Rs. 35—35—40—4-2—68—3-2—80.

None need apply who is not a good Stenographer and who does not satisfy the following conditions :—

(*a*) He must be a British subject or subject of an Indian State in respect of whom the Governor General in Council has made a declaration under section 96A of the Government of India Act.

(*b*) He must have passed the Matriculation Examination or any examination recognised by Government as its equivalent.

(*c*) He must not be over 25 years of age.

(*d*) He must produce a certificate of good moral character from the school in which he has last been educated, or from some respectable house-holder to whom he is well known in private life and who is himself known to a responsible officer of Government, the last fact being certified by the countersignature of the officer in question.

(*e*) He must produce a certificate of physical fitness for Government service in the prescribed form from a Civil Surgeon.

Applications with copies of testimonials must reach the undersigned on or before the 20th July 1936.

J. M. CHATARJI, Collector.

Bankura, the 30th June 1936.

APPLICATIONS are invited for the post of the Tauzi Navis of the Bankura Collectorate.

The post is permanent and pensionable and carries a pay of Rs. 80—4—140.

The appointment will be made by selection from candidates having previous experience of office work preferably in the Tauzi Department. None but persons at present in Government employment in the Presidency need apply.

Applications stating age, present pay, duties in which previously employed, experience in the Tauzi Department and giving full details of qualifications with copies of certificates should be addressed to the Collector of Bankura so as to reach him by the 10th July 1936 at the latest.

J. M. CHATARJI, Collector.

Bankura, the 25th June 1936.

WANTED temporarily for three years a Second Maulvi on a fixed salary of Rs. 50 per month for the Jessore Zilla School.

Candidates must have passed at least the Fazil Examination of the Board of Central Madrasah Examination and the I.A. Examination of Calcutta University. A good knowledge of Persian is essential.

Preference will be given to those having experience in teaching and proficiency in Urdu.

Applications stating name, age, educational qualifications, teaching experience, father's name and address—village, post office, thana and district should reach the undersigned on or before 15th July 1936.

M. A. JAAFAR,

Inspector of Schools, Presidency Division.

Calcutta, the 27th June 1936.

WANTED temporarily for six months with every prospect of being made permanent an experienced Head Clerk and Accountant for the office of the District Engineer of Pabna on a salary of Rs. 100—5—150 per month. None need apply who is not a passed accountant or a graduate in Commerce Examination under the rules. Preference will be given to those who have got previous experience in the District Engineer's office works or P. W. D. office works. Applications stating age, qualifications, past services, native village and district of the candidates with copies of certificates will be received by the undersigned up to the 30th July 1936. The selected candidate will have to join at once and will not get any joining travelling allowance.

A. R. MAHMOOD, Chairman, District Board.

Pabna, the 2nd July 1936. (1370—3)

NOTICE is hereby given that Kash prosad Muskaara son of Gopalrai Maskara *alias* Ramgopal Maskara, of No. 26, Upper Chitpur Road, Calcutta, has retired from the firm of Jankidas Baijnath carrying on business at No. 173, Harrison Road, Calcutta, on and from Asarh Sudi 1, S. Y. 1933—corresponding with the 20th day of June 1936—and that on and from the said date Baijnath Jiloka and Mohanlal Jiloka, both sons of Jankidas Jiloka, deceased, are absolutely entitled to the said firm of Jankidas Baijnath and all the assets, outstandings, properties and effects of the said business, and are liable for the liabilities thereof. The said Kashiprosad Maskara has now no concern whatsoever with the said firm.

Dated Calcutta, this 3rd day of July 1936.

P. D. HIMATSINGKA & Co., Attorneys-at-Law and Attorneys for Biajnath Jiloka, Mohanlal Jiloka and Kashiprosad Maskara, 6, Old Post Office Street, Calcutta.

(1380—1)

BOARD OF REVENUE, BENGAL.

"A" Group—Wards Branch.

ORDER—No. 9032W.

WHEREAS application has been made by Babus Kshitish Chandra Rai Choudhuri, Harendra Narayan Rai Choudhuri and Naresh Chandra Rai Choudhuri of Bahin in the district of Dinajpur praying that they may be declared to be disqualified proprietors for the purpose of managing their own estate and that their estate be brought under the management of the Court of Wards, under clause (*c*) of section 6 of the Bengal Court of Wards Act, IX of 1879, as amended up to date, the Court of Wards is pleased to declare that the said Babus Kshitish Chandra Rai Choudhuri, Harendra Narayan Rai Choudhuri and Naresh Chandra Rai Choudhuri are disqualified proprietors within the meaning of that section and that it is expedient in the public interest that their estate should be managed by the Court of Wards.

Under sections 7 and 35 of the said Act (IX (B.C.) of 1879), the Court of Wards also declares that it has decided to take, under its charge, the property of the disqualified proprietors abovenamed and it directs that possession be taken of such property on behalf of the said Court.

By order of the Court of Wards, Bengal,

S. BANERJEE, Secretary.

Calcutta, the 30th June 1936. (1367—1)

Estate Beaumont Dixie Crampton Wood, deceased.

PURSUANT to section 360 of Act XXXIX of 1925 and section 42 of Act XXVIII of 1866, the creditors and all persons interested in the estate of Beaumont Dixie Crampton Wood, late of Bree's Royal Hotel, Jesrey, in the Channel Islands, who died at Northampton, on the 4th day of December 1935, and Letters of Administration to whose estate were granted by the High Court, Calcutta, on the 16th day of June 1936, are hereby required to submit particulars of their claims to the undersigned on or before the 12th day of August 1936, after which date the Administrator will distribute the assets, having regard only to the claims of which notice shall then have been received.

ORR, DIGNAM & CO.,
Solicitors to the Administrator.

32, Dalhousie Square, South, Calcutta, 2nd July 1936.

(1383—1)

Estate Mrs. Margaret Bald, deceased.

PURSUANT to section 360 of Act XXXIX of 1925 and section 42 of Act XXVIII of 1866, the creditors and all persons interested in the estate of Mrs. Margaret Bald, late of The Priory, Heene Road, Worthing, in the County of Sussex, who died at The Priory aforesaid, on the 18th day of August 1935, and Letters of Administration to whose estate were granted by the High Court, Calcutta, on the 1st day of May 1936, are hereby required to submit particulars of their claims to the undersigned on or before the 9th day of July 1936, after which date the Administrator will distribute the assets, having regard only to the claims of which notice shall then have been received

ORR, DIGNAM & CO.,
Solicitors to the Administrator.

32, Dalhousie Square, South, Calcutta, 29th June 1936.

(1372—1)

THE Bengal and Madras Service Family Pension Fund which is provisionally managed and assisted by Government has for its object the provision of monthly pensions for the maintenance of the widows and children of subscribers and is open, with certain exceptions, to all active and pensioned members of the Uncovenanted service of Government (except those serving under the Government of Bombay), and to Local Fund servants earning pensions from Government. Some of the special features of the fund are (1) that widowed daughters incapable of re-marriage or children labouring under such mental or bodily infirmities as incapacitate them from earning their livelihood or preclude the possibility of marriage (in case of a daughter) are admitted to its benefits; and (2) that subscribers to the Widows and Daughters' branches are entitled to a refund of 30 per cent. of the premia paid, should the nominee predecease them after five years of admission. The second quinquennial valuation of the Fund has been completed by the Actuary to the Government of India, and his report discloses very favourable results. For forms of application and rules of the Fund apply to the Accountant-General, Bengal, Imperial Secretariat Buildings, Calcutta.

Notice under section 10A of Act IX (B.C.) of 1879.

WHEREAS under sections 7 and 35 of the Court of Wards Act, IX (B.C.) of 1879, as amended up to date, the Court of Wards has assumed charge of the property of Babus Ram Prasad Sen and his brothers of mauza Radhaballabh situated in the district of Rangpur.

Notice is hereby given under section 10A of the said Act that all creditors having claims against the said estate of Babu Ram Prasad Sen and his brothers or his immoveable property are hereby required to submit the same in writing to the Collector of Rangpur within six months from the date of publication of this notice.

Creditors are hereby warned that claims not submitted, as required by the notice, are liable to be deemed to have been duly discharged.

H. C. SEN, Wards Deputy Collector.

Rangpur, the 17th June 1936. (1281—3)

In the matter of the Indian Companies Act, 1913,

and

In the matter of Binapani Book Depot, Limited.

NOTICE is hereby given that a general meeting of the Company will be held on 27th July 1936, at 3 p.m., at 49, Johnson Road, Dacca, for the purpose of laying before it the account for the final dissolution of the Company.

A. C. PALCHOWDHURY, Liquidator.

Palong, Faridpur, the 25th June 1936. (1371—1)

In the matter of the Indian Companies Act, 1913, and

In the matter of Kishori Lal Chowdhry's Bhutnath Office, Limited (in liquidation).

NOTICE, pursuant to the Indian Companies Act, 1913, is hereby given that a meeting of the creditors of the above named Company will be held at room No. 12, 12, Dalhousie Square East, Calcutta, on Saturday, the 25th day of July 1936, at 12 noon, for the purpose provided in the said Act.

K. C. ROY CHOWDHURY, G.D.A., R.A.,
Liquidator.

12, Dalhousie Square East, Calcutta, the 3rd July 1936.

(1382—1)

In the matter of the Indian Companies Act, 1913,

and

In the matter of Kishori Lal Chowdhry's Bhutnath Office, Limited (in liquidation).

NOTICE is hereby given in accordance with the Indian Companies Act, 1913, that at an extraordinary general meeting of the members of the abovenamed Company duly convened and held at 9A, Chitpur Spur, in the city of Calcutta, on Friday, the 26th day of June 1936, at 12 o'clock noon, the following resolutions were duly passed as an extraordinary resolution:—

"Resolved that while it has been proved to the entire satisfaction of this meeting that the Company cannot by reason of its liabilities continue its business, and that it is advisable to wind up the same and (that Mr. K. C. Roy Chowdhury, Registered Accountant and Auditor of 12, Dalhousie Square, East, Calcutta, be appointed as liquidator for the purpose of such winding up and that he be authorised to bring the liquidation under the supervision of the Court and for the purpose of beneficial winding up the liquidator be authorised to carry on the business if he thinks fit and that the remuneration of the liquidator be and is hereby fixed at Rs. 100 per month and a commission of 5 per cent. on both realisation and distribution)."

K. P. CHOWDHURY,
Chairman.

9A, Chitpur Spur, Calcutta, the 27th June 1936.

(1295—1)

In the matter of the Indian Companies Act, 1913,

and

In the matter of the Calcutta Provident Co., Ltd. (in liquidation).

NOTICE is hereby given that the general meeting of the members of the Company called by the undersigned on the 20th day of June 1936, under section 217 (1) of the Indian Companies Act, 1913, has been adjourned for want of quorum to the 25th day of July 1936 at 3 p.m. and will be held at the office of the liquidators at 5, Hastings Street, Calcutta.

S. N. BANERJEA, R.A.,
J. N. ROY CHOWDHURY, R.A.,
Liquidators.

5, Hastings Street, Calcutta, the 26th day of June 1936.

(1296—1)

In the matter of the Indian Companies Act, 1913,

and

In the matter of Ahsanullah Book House, Ltd. (In liquidation).

NOTICE is hereby given in pursuance of section 217 of the Companies Act, 1913, that a general meeting of the members of the abovenamed Company will be held at 10, Old Post Office Street, Calcutta, on Saturday, the 15th day of August 1936, at 3 o'clock in the afternoon, for the purpose of having an account laid before them, showing the manner in which the winding up has been conducted, and the property of the Company disposed of, and of hearing any explanation that may be given by the liquidator, and also of determining by extraordinary resolution the manner in which the books, accounts and documents of the Company, and of the liquidator thereof, shall be disposed of.

Dated the 2nd day of July 1936.

M. S. ZOHA, liquidator,
10, Old Post Office Street, Calcutta.

(1381—1)

IN THE HIGH COURT OF JUDICATURE AT FORT WILLIAM IN BENGAL.

Ordinary Original Civil Jurisdiction.

In the matter of the Indian Companies Act,

and

In the matter of Madan Theatres, Limited.

NOTICE is hereby given that a petition for winding up the abovenamed Company by the High Court of Judicature at Fort William in Bengal was on the 20th day of January 1936 presented to the Court by Ghanshyamdas Goenka, Sir Badridas Goenka, Kt., C.I.E., and Jagmohan Prosad Goenka, all of No. 145, Muktaram Babu Street, Calcutta, creditors of the said Company; and that the said petition is directed to be heard before the Court on the 27th day of July 1936; and any creditor or contributory who is desirous of opposing the order for the winding up of the said Company under the above Act should appear at the time of the hearing of the application by himself or his attorney or advocate for that purpose; and a copy of the petition will be furnished to any creditor or contributory of the said Company requiring the same by the undersigned on payment of the prescribed charge for the same.

Dated this 2nd day of July 1936.

CHARU CHUNDRA BOSU,

Attorneys for the petitioners,
9, Old Post Office Street,
Calcutta.

Note.—Rule 41 provides that any person who intends to appear at the hearing of the said petition must serve on or send by post to the abovenamed a notice in writing of his intention so to do. The notice must state the name and address of the person, or, if a firm, the name and address of the firm, and must be served, or, if posted, must be sent by post in sufficient time to reach the abovenamed not later than two clear days before the 27th day of July 1936.

(1373—1)

In the matter of the Indian Companies Act, 1913,

and

In the matter of Rup Narayan Rice Mills, Ltd.

(In voluntary liquidation).

NOTICE is hereby given that a meeting of the shareholders of the above Company under section 217 will be held at 18, Krishna Mitter Lane, Howrah, on the 9th August 1936 at 11 a.m. to receive the winding up report and final accounts for dissolution of the Company.

D. CHAUDHURI, Liquidator.

18, Krishna Mitter Lane, Howrah, the 3rd July 1936.

(1374—1)

GOVERNMENT OF BENGAL.

FINANCE DEPARTMENT.

Miscellaneous.

Calcutta, the 20th October 1927.

NOTICE.

IN supersession of the orders issued in notice, dated the 10th June 1922, published in the *Calcutta Gazette*, dated the 14th June 1922, the following revised rates have been fixed for the *Calcutta Gazette* and its parts with effect from the date of this notice. This will not, however, affect the subscriptions already paid at previous rates until they have expired :—

	Net.	With postage.
Per annum—	Rs.	Rs. A.
Entire	31	37 8
Part I	8	10 0
Part IA	2	3 0
Part IB	5	7 0
Part II	5	7 0
Parts III and IV together, or any one of them ..	1	1 8
Parts V and VI together, or any one of them ..	2	3 0
Bengal Library Catalogue ..	2	3 0
Jury Lists	3	4 0
Supplement	7	9 0

	Postage according to weight.
Per issue—	Rs. A.
Entire Gazette (excluding Bengal Library Catalogue and Jury Lists) ..	0 12
Part I	0 4
Part IA	0 2
Part IB	0 4
Part II	0 4
Parts III and IV together, or any one of them	0 2
Parts V and VI together, or any one of them	0 2
Bengal Library Catalogue ..	0 8
Jury Lists	1 0
Supplement	0 4

2. This will not affect the orders relating to specially heavy issues, issued in Notice No. 1874 Mis., dated the 22nd August 1923, published in the *Calcutta Gazette*, dated the 29th August 1923.

J. A. WOODHEAD,
Secretary to the Government of Bengal.

Imperial Library.

Secretariat Buildings, 6, Esplanade East, Calcutta.

Open on—

Week days and Saturdays from 10 a.m. to 7 p.m.
Sundays and Gazetted holidays from 2 p.m. to 5 p.m.

THE Imperial Library is also a Lending Library. It is free to all except children. There is no subscription to pay.

K. M. ASADULLAH, Librarian.

CINCHONA FACTORY PRODUCTS.

By order of the Government of Bengal Cinchona Factory Products as manufactured and packed at the Cinchona Factory, Mungpoo, Darjeeling district, will be sold and distributed by the Superintendent of the **Presidency Jail**, *in original packages* as received from the Mungpoo Factory, at the rates herein noted **from the 1st May 1926** :—

Name of drug.	Price per lb. in powder form. Taken at a time. For 60 lbs. and upwards.	For 6 lbs. and over but less than 60 lbs.	For any quantity less than 6 lbs.	Price in 5 grain tablets. 1,000 tablets.	500 tablets.	250 tablets.	Price by weight per lb.
	Rs.	Rs.	Rs.	Rs.	Rs. a.	Rs. a.	Rs.
Quinine Bisulphate ..	18	19	20	16	8 0	4 4	..
,, Hydrobromide ..	23	24	25	20	10 0	5 4	..
,, Bihydrobromide ..	26	27	28	23	11 8	6 0	..
,, Salicylate ..	24	25	26	..	..	..	..
,, Tannate ..30 per cent. 35 per cent.	14	15	16	..	..	..	14

N.B.—Packing free in tins, sizes 1 lb., 8 oz. and 4 oz. only. Packing in bottles or smaller sizes of tins extra.

Quinine Sulphate.

For 60 lbs. and upwards at a time .. Rs. 18 per lb.
For 6 lbs. and over but less than 60 lbs. at a time .. .. .. ,, 19 ,,
For any quantity less than 6 lbs. .. ,, 20 ,,

Totaquina.

Irrespective of quantity .. Rs. 13-8 per lb.
For sale to hospitals and dispensaries in Bengal, Bihar, Orissa and Assam.

Quinine Hydrochloride.

For 60 lbs. and upwards at a time .. Rs. 23 per lb.
For 6 lbs. and over but less than 60 lbs. at a time .. .. .. ,, 24 ,,
For any quantity less than 6 lbs. .. ,, 25 ,,

Quinine Di-Hydrochloride.

For 60 lbs. and upwards at a time .. Rs. 25 per lb.
For 6 lbs. and over but less than 60 lbs. at a time .. .. .. ,, 26 ,,
For any quantity less than 6 lbs. .. ,, 27 ,,

Quinidine Sulphate.

For 60 lbs. and upwards at a time .. Rs. 20 per lb.
For 6 lbs. and over but less than 60 lbs. at a time .. .. .. ,, 21 ,,
For any quantity less than 6 lbs. .. ,, 22 ,,

Cinchonidine Sulphate.

For 60 lbs. and upwards at a time .. Rs. 25 per lb.
For 6 lbs. and over but less than 60 lbs. at a time .. .. .. ,, 26 ,,
For any quantity less than 6 lbs. .. ,, 27 ,,

Cinchonine Sulphate.

For 60 lbs. and upwards at a time .. Rs. 12 per lb.
For 6 lbs. and over but less than 60 lbs. at a time .. .. .. ,, 13 ,,
For any quantity less than 6 lbs. .. ,, 14 ,,

*Cinchona Febrifuge (Powder).

For 60 lbs. and upwards at a time .. Rs. 9 per lb.
For 6 lbs. and over but less than 60 lbs. at a time .. .. .. ,, 9 ,,
For any quantity less than 6 lbs. .. ,, 10 ,,

*Cinchona Febrifuge (Tablets).

For 60 lbs. and upwards at a time .. Rs. 10 per lb.
For 6 lbs. and over but less than 60 lbs. at a time .. .. .. ,, 10 ,,
For any quantity less than 6 lbs. .. ,, 11 ,,

Supply of Cinchona Febrifuge to all authorised indentors will be rationed in the proportion of 1½ of Cinchona Febrifuge to 1 of Quinine Sulphate at their existing prescribed prices.

Cinchona Bark (in 50 pound original bags).

Per bag .. Rs. 25.

4 grains Quinine Tablets.

Rs. a.
2 8 per box of 200 tablets (for Bengal and other provinces).
12 1 per 5 boxes—(Transit charges inclusive) for Public in Bengal.
15 8 per lb.

5 grains Quinine Tablets.

Rs. a.
15 8 per lb. sold in 1 lb., ½ lb. and ¼ lb. tins.

5 grains Quinine Hydrochloride Tablets.

Rs. a.
20 0 per 1,000 tablets.
10 0 ,, 500 ,,
5 4 ,, 250 ,,

Packing free in tins, sizes 1 lb., 8 oz. and 4 oz. only. Packing in bottles or smaller sizes in tins extra.

5 grains Quinine Bihydrochloride Tablets.

Rs. a.
22 0 per 1,000 tablets.
11 0 ,, 500 ,,
6 0 ,, 250 ,,

Packing free in tins, sizes 1 lb., 8 oz. and 4 oz. only. Packing in bottles or smaller sizes in tins extra.

Transit charges extra in every case.

***Cinchona Febrifuge** is for sale to Government and Charitable Institutions, Local Bodies and Missionaries only. **It is not for sale to Private Firms or the General Public.**

Quinine Sulphate is now open for sale to the Public at the above rates. But it will be supplied to Hospitals and Dispensaries in Bengal, Bihar, Orissa and Assam at Rs. 18 per pound irrespective of quantities.

Five and ten boxes of Quinine Tablets are sold to the public at the concession rates which will be intimated on application.

Provinces other than Bengal, Bihar, Orissa and Assam will get their supplies of Sulph. Quinine and Cinchona Febrifuge Powder and Tablets from the Director, Botanical Survey of India, Sibpur, Howrah.

Local sale at the jail gate from 10 to 12 noon.

The system of payment is by—*Cash in advance*—by "*Treasury Challans*," which should accompany the order or indent.

In cases where this is not possible, payment should be made by "*Remittance Transfer Receipts*" or crossed "*Cheques*."

Indents unaccompanied by cash in advance will be sent Value Payable Post. Credit sale is not allowed except under special circumstances.

In the case of *Government officers* payments will be recovered by *Book Transfer, i.e., Countersigned Invoices*, in the event of *Cash* not accompanying the indent by "*Treasury Challans*," *Remittance Transfer Receipt or Cheque.*

2. Price and postage must accompany the price of the drug (when the drug is required by post).

The name of the Railway and Steamer Station or Post Office must be written distinctly when the parcels are required by Rail, Steamer or by Post. Railway parcels are sent by passenger train only.

A scale of postage is given below.

	1 oz.	2 ozs.	4 ozs.	½ lb.	¾ lb.	1 lb.
	As.	As.	As.	As.	As.	Rs. A.
Quinine Sulph. ..	..	..	7	7	11	0 11
Cinchona Feb. ..	..	..	7	7	11	0 11
Cinchona Feb. Tablets	..	..	7	7	11	0 11
Quinine Hydrochlor. ..	5	5	7	7	..	0 11
Quinine Di-hydrochlor.	5	5	7	7	..	0 11
Quinine Tablets ..	..	..	7	7	11	0 11
Totaquina ..	..	..	7	7	11	0 11

	1¼ lb.	2 lb.	3 lb.	4 lb.	5 lb.	6 lb.
	Rs. A.	Rs. A.	Rs. A.	Rs. A.	Rs. A.	Rs. A.
Quinine Sulph. ..	0 15	1 3	1 7	1 15	2 7	2 15
Cinchona Feb. ..	0 15	0 15	1 7	1 11	1 15	2 7
Cinchona Feb. Tablets	1 3	1 3	1 11	1 15	2 7	2 15
Quinine Hydrochlor. ..	1 1	0 15	1 7	1 11	..	..
Quinine Di-hydrochlor.	1 1	0 15	1 13	2 5	..	..
Quinine Tablets ..	0 15	0 14	1 7	1 11	1 15	2 3
Totaquina ..	0 15	1 3	1 7	1 15	2 7	2 15

Two different drugs are not packed in the same parcel and postage must be paid separately for each kind.

N.B.—Postage stamps are not accepted as revenue.

Government reserve the right to alter the price without notice.

Registered No. C207

No. 28 of 1936

The Calcutta Gazette

THURSDAY, JULY 9, 1936.

CONTENTS:

	Page.		Page.
Statement showing donations and endowments of the Presidency Division during the year 1935	957	Weather and Crop Report for the week ending 1st July 1936	961—964
Statement of weekly gauge-readings on certain rivers in Bengal	958—960	Vital Statistics of towns of Bengal for the week ending 27th June 1936 ..	965
Corporation of Calcutta Notice ..	960	Statement under the Cotton Ginning and Pressing Factories Act, 1925 ..	966

SUPPLEMENT.

Official Papers.

Statement showing donations and endowments made by private individuals for public purposes and works of public utility of Rs. 1,000 and up to Rs. 5,000 in value, made or executed in the districts of the Presidency Division and acknowledged by the Commissioner during the year 1935.

Division.	District.	Name of donor.	Purpose.	Amount.	Total of district.	Total of Division.
1	2	3	4	5	6	7
				Rs.	Rs.	Rs.
Presidency ..	24-Parganas ..	Babu Gosto Behari Mondol, Chairman, North Barrackpore Municipality.	1. Building fund of Nawabganj Bal ka Vidyalaya.	500		
			2. Contribution to the fund of local maktab at Ichapore.	200		
			3. Contribution to the Bibhusanker School Fund.	101		
			4. Sinking two tube-wells, one at Ichapore Ward No. I and another at Balbagan-Nawabganj Ward No. IV of North Barrackpore Municipality.	900	1,701	
	Khulna ..	Babu Ram Narayan Roy Choudhury of Bagerhat.	Construction of the Ramnarayan Ward at the Bagerhat Hospital	2,400		
	Ditto ..	Munshi Joynal Abedin Sardar of Vickotmari.	Remodelling the dispensary building at Garaikhali.	3,000	5,400	7,101

A. J. DASH, *Commissioner.*

Statement showing the gauge readings at Dacca Waterworks Station on the river Buriganga for the week ending 20th June 1936.

Date.	At highest water.		At lowest water.		Commencement of—		Remarks.	
	Time.	Reading.	Time.	Reading.	Ebb tide.	Flow tide.	7 a.m.	5 p.m.
1936.								
14th June ..	18-0	13·65	11 30	13·35	18-20	11-48	13·6	13·5
15th „ ..	18-0	13·65	7-0	13·5	18-15	7-13	13·5	13·55
16th „ ..	18-0	13·6	6-0	13·5	18-13	6-12	13·55	13·55
17th „ ..	7-0	13·5	17-0	13·35	7-10	17-10	13·5	13·35
18th „ ..	7-30	13·45	18-0	13·0	7-38	18-7	13·4	13·1
19th „ ..	9-0	13·3	6-0	13·0	9-7	6-6	13·15	13·2
20th „ ..	12-0	13·2	6-0	12·9	12-10	6-9	12·95	13·05

Notable high and low water-levels of previous years.

		Taken at high tide.			Taken at low tide.
27th August	1906 ..	70·5	23rd February	1907 ..	51·06
5th September	1909 ..	66·86	13th „	1908 ..	51·06
10th August	1910 ..	69·86	12th March	1912 ..	51·06
1st „	1911 ..	68·46	6th „	1914 ..	50·60
13th „	1912 ..	67·16	22nd February	1915 ..	50·30
31st „	1915 ..	69·7	15th „	1916 ..	50·60
8th „	1916 ..	68·1	3rd March	1917 ..	51·0
12th „	1917 ..	67·1	21st February	1918 ..	51·40
13th „	1918 ..	69·12	26th „	1919 ..	50·4
2nd „	1919 ..	66·8	18th „	1920 ..	50·9
8th September	1920 ..	66·9	19th „	1921 ..	50·9
28th July	1921 ..	68·4	8th March	1922 ..	51·05
10th August	1922 ..	68·00	14th „	1923 ..	50·8
31st July	1923 ..	66·15	16th February	1924 ..	50·50
20th August	1924 ..	68·82	5th March	1925 ..	50·9
8th September	1925 ..	68·52	9th February	1926 ..	2·2
15th August	1926 ..	19·6	27th „	1927 ..	2·10
17th September	1927 ..	18·70	16th „	1928 ..	2·2
22nd August	1928 ..	20·0	21st „	1929 ..	2·0
13th July	1929 ..	17·8	24th „	1930 ..	2·3
12th September	1930 ..	18·65	28th „	1931 ..	2·2
16th August	1931 ..	21·7	18th „	1932 ..	1·8
6th September	1932 ..	18·5	6th „	1933 ..	2·10
7th „	1933 ..	17·80	26th March	1934 ..	2·40
23rd August	1934 ..	19·35	15th February	1935 ..	1·70
1st September	1935 ..	19·80			

N.B.—Zero of the gauge at Dacca Waterworks prior to 11 a.m. on the 8th January 1926= —48·51 with reference to P. W. D. datum.

Zero of the gauge at Dacca Waterworks since 11 a.m. of the 8th January 1926=0·00 with reference to P. W. D. datum.

M. K. BHATTACHARJEE, *Executive Engineer,*
Khulna Division.

Khulna, the 27th June 1936.

Statement showing the gauge readings at Dacca Waterworks Station on the river Buriganga for the week ending 27th June 1936.

Date.	At highest water.		At lowest water.		Commencement of		Remarks.	
	Time.	Reading.	Time.	Reading.	Ebb tide.	Flow tide.	7 a.m.	5 p.m.
1936.								
21st June ..	13-0	13·15	7-0	12·85	13-12	7-11	12·85	13·0
22nd „ ..	12-30	13·0	6-0	12·65	12-40	6-12	12·8	12·7
23rd „ ..	13-0	12·85	7-0	12·6	13-8	7-10	12·6	12·65
24th „ ..	14-0	12·8	8·0	12·6	14-10	8-10	12·65	12·7
25th „ ..	14-30	12·9	16 0	12·55	14-40	16-8	12·7	12·65
26th „ ..	17-0	12·75	11-0	12·5	17-12	11-13	12·65	12·75
27th „ ..	18-0	12·85	12-0	12·6	18-10	12-11	12·7	12·7

Notable high and low water-levels of previous years.

		Taken at high tide.			Taken at low tide.
27th August	1906 ..	70·5	23rd February	1907 ..	51·06
5th September	1909 ..	66·86	13th „	1908 ..	51·06
10th August	1910 ..	69·86	12th March	1912 ..	51·06
1st „	1911 ..	68·46	6th „	1914 ..	50·60
13th „	1912 ..	67·16	22nd February	1915 ..	50·30
31st „	1915 ..	69·7	15th „	1916 ..	50·60
8th „	1916 ..	68·1	3rd March	1917 ..	51·0
12th „	1917 ..	67·1	21st February	1918 ..	51·40
13th „	1918 ..	69·12	26th „	1919 ..	50·4
2nd „	1919 ..	66·8	18th „	1920 ..	50·9
8th September	1920 ..	66·9	19th „	1921 ..	50·9
28th July	1921 ..	68·4	8th March	1922 ..	51·05
10th August	1922 ..	68·00	14th „	1923 ..	50·8
31st July	1923 ..	66·15	16th February	1924 ..	50·50
29th August	1924 ..	68·82	5th March	1925 ..	50·9
8th September	1925 ..	68·52	9th February	1926 ..	2·2
15th August	1926 ..	19·6	27th „	1927 ..	2·10
17th September	1927 ..	18·70	16th „	1928 ..	2·2
22nd August	1928 ..	20·0	21st „	1929 ..	2·9
13th July	1929 ..	17·8	24th „	1930 ..	2·3
12th September	1930 ..	18·65	28th „	1931 ..	2·2
16th August	1931 ..	21·7	15th „	1932 ..	1·8
6th September	1932 ..	18·5	6th „	1933 ..	2·10
7th „	1933 ..	17·80	26th March	1934 ..	2·40
23rd August	1934 ..	19·35	15th February	1935 ..	1·70
1st September	1935 ..	19·80			

N.B.—Zero of the gauge at Dacca Waterworks prior to 11 a.m. on the 8th January 1926= —48·51 with reference to P. W. D datum.

Zero of the gauge at Dacca Waterworks since 11 a.m. of the 8th January 1926=0·00 with reference to P. W. D. datum.

M. K. Bhattacharjee, *Executive Engineer,*
Khulna Division.

Khulna, the 3rd July 1936.

Statement of weekly gauge readings on the river Ganges at Rampur Boalia for the week ending the 27th June 1936.

Date.	Hour.	Height of surface above P. W. D. datum.	Height of surface above P. W. D. datum on the same date last year.	Remarks.
1936.				Value of B. M. on Rajshahi College step; =64·73 P. W. D.
21st June	7 a.m.	42·37	39·75	Zero of gauge = 39·37 P. W. D.
22nd „	7 „	42·87	39·85	
23rd „	7 „	43·37	39·90	
24th „	7 „	43·77	39·90	
25th „	7 „	43·92	40·05	
26th „	7 „	43·97	40·10	
27th „	7 „	44·07	40·15	

Highest recorded level on 26-8-1879=64·24.
Lowest recorded level on 24-4-1931=32·05.

S. GUPTA, *Subdivisional Officer,*
Irrigation Department, Rajshahi.

Rampur Boalia, the 27th June 1936.

CORPORATION OF CALCUTTA.

NOTICE.

Central Municipal Office, the 3rd July 1936.

It is hereby notified for general information that the Corporation of Calcutta under powers vested in them in this behalf have by a resolution, dated the 24th June 1936, prescribed the alignment of a portion of Madan Boral Lane in Ward No. 10 to a width of 40 feet.

A copy of the plan prepared in this behalf may be seen in the office of the Chief Valuer and Surveyor of the Corporation any day between 11 a.m. and 3 p.m. on payment of usual fees.

J. C. MUKERJEA,
Chief Executive Officer.

DISTRICT REPORTS ON WEATHER AND CROPS.

For the week ending on the 1st July 1936.

Summary.—Excepting heavy showers in places the rainfall was generally light to moderate. Preparation of lands for and sowing of winter rice in seed-beds continue favourably. Weeding of autumn crops is in brisk progress; reaping is proceeding in places. Prospects of standing crops are generally satisfactory. During the week ending Saturday, the 27th June, daily average of labourers attending test relief works and the number of persons receiving gratuitous relief were 5,353 and 4,421, respectively, in the distressed areas of Murshidabad. In 24-Parganas, Burdwan and Birbhum, 3,461, 5,900 and 6,688 persons were employed on test relief works on Saturday, the 27th June. In Nadia and Burdwan, 378 and 1,150 persons also received gratuitous relief. In Hooghly 16,410 labourers were engaged on test relief works during the week ending Saturday, the 27th idem. The average price of common rice for the province has risen by about 0·13 per cent. as compared with that of the previous week.

Serial No.	District and sub-division.	Rainfall.	Price of common rice, in seers, per rupee.		Character of the weather, condition of crops, etc.
			This week.	Previous week.	
1	2	3	4	5	6
		Inches.			
1	24-Parganas ..	2·66	9 3/16	9 3/16	Weather seasonable. Fodder and water are sufficient. Prospects of crops are favourable. Cattle-disease is reported from Mogra and Haroa police-stations. Import of rice continues from East Bengal in Basirhat. 3,461 persons were engaged on test relief works and relief works in Sadar, Basirhat and Diamond Harbour on the last day of the week ending the 27th June. Agricultural loans also gratuitous relief were distributed during the week in Sadar, Basirhat, Diamond Harbour and Baraset.
	Diamond Harbour..	6·03	9½	9½	
	Barrackpore ..	2·10	9	9	
	Baraset ..	0·90	9	9	
	Basirhat ..	2·84	11	11	
2	Nadia ..	1·46	8	8	Weather seasonable. Agricultural operation is going on in full swing. Rice is being imported largely in Ranaghat. Fodder and water are sufficient. Cattle-disease exists in Sadar. Distribution of agricultural loan is being made in Sadar, Ranaghat and Chuadanga. Gratuitous relief was given to 164, 122 and 92 persons in Sadar, Ranaghat and Meherpur subdivisions, respectively, for the week ending 27th June.
	Kushtia ..	2·45	10	10	
	Meherpur ..	2·35	11	11	
	Chuadanga ..	2·67	12	12	
	Ranaghat ..	1·22	9½	9½	
3	Murshidabad ..	2·45	9½	9½	Weather seasonable. Prospects of standing crops are favourable. Fodder and water are sufficient. Cattle-disease is reported from Lalbagh and Kandi subdivisions. Rice is being imported from Dinajpur in Lalbagh subdivision. No export. Number of average daily labourers who attended the test relief centres during the week ending Saturday, the 27th June was 5,353 and and that of persons receiving gratuitous relief in the distressed areas was 264, 3,097 and 1,060 in Lalbagh, Kandi and Jangipur subdivisions, respectively.
	Lalbagh ..	2·12	10½	10½	
	Jangipur ..	0·80	10½	10½	
	Kandi ..	2·39	9½	9½	
4	Jessore ..	1·87	11	11	Weather seasonable. Prospects of standing crops are fair. No large export or import. Fodder and water are sufficient.
	Jhenidah ..	1·25	13½	13	
	Magura ..	0·75	13	13	
	Narail ..	1·18	12	12	
	Bongaon ..	1·79	10	10	
5	Khulna ..	2·06	10	10	Weather seasonable. Fodder and water are sufficient. Cattle-disease is reported from Rampal thana. Test relief works suspended.
	Satkhira ..	2·40	10½	10½	
	Bagerhat ..	2·35	8½	8½	

Serial No.	District and sub-division.	Rainfall.	Price of common rice, in seers, per rupee.		Character of the weather, condition of crops, etc.
			This week.	Previous week.	
1	2	3	4	5	6
		Inches.			
6	Burdwan ..	3·85	9½	9½	Weather seasonable. Condition of crop is favourable. Fodder is sufficient. Cattle-disease is reported from Kalna subdivision. 5,900 labourers were engaged on test relief works on 27th June 1936. 1,150 persons received gratuitous relief.
	Asansol ..	7·70	11	11	
	Katwa ..	1·55	9	9	
	Kalna ..	2·71	8½	8½	
7	Birbhum ..	5·35	10	10	Weather seasonable. Prospects of standing crops are fair. Water is sufficient but there is scarcity of fodder. 6,688 persons were employed on test relief works on preceding Saturday.
	Rampurhat ..	5·02	10½	10½	
8	Bankura ..	7·58	10	10	Weather cloudy. Transplantation of paddy seedlings is in progress in some places. Prospects of standing crops are good owing to recent heavy showers. Fodder and water are sufficient. Cattle-disease is reported from Raipur and Taldangra thanas.
	Vishnupur .	5·81	8½	8½	
9	Midnapore ..	8·50	10	10.	Sowing of paddy continues and transplantation has commenced. Jute plants are thriving. Fodder and water are sufficient.
	Contai ..	3·95	8½	8	
	Tamluk ..	2·45	9	9	
	Ghatal ..	5·15	11½	11½	
	Jhargram ..	2·73	10	10	
10	Hooghly ..	1·55	9⅝	10	Weather seasonable. Fodder and water are sufficient. The number of test work labourers for the week ending Saturday, the 27th June, was 16,410.
	Serampore ..	2·28	10	10	
	Arambagh ..	2·41	9½	9½	
11	Howrah ..	2·21	10	10	Weather seasonable. Its effects are good. Fodder and water are sufficient.
	Uluberia ..	4·51	9½	9½	
12	Rajshahi (Rampur-Boalia).	2·07	9½	9½	Weather seasonable. Condition of standing crops is fair. Fodder and water are sufficient. Cattle-disease is reported from Badalgachi police-station.
	Naogaon ..	0·45	10½	10½	
	Nator ..	0·53	9½	9½	
13	Dinajpur ..	0·12	11	11	Weather seasonable. Fodder and water are sufficient. Cattle-disease is reported from Atwari, Birganj and Thakurgaon thanas.
	Thakurgaon ..	Nil	12	13	
	Balurghat ..	2·87	11	11	
14	Jalpaiguri ..	2·09	11	11½	Weather hot. Fodder and water are sufficient.
	Alipur ..	3·85	11½	11½	

Serial No.	District and sub-division.	Rainfall.	Price of common rice, in seers, per rupee.		Character of the weather, condition of crops, etc.
			This week.	Previous week.	
1	2	3	4	5	6
		Inches.			
15	Darjeeling ..	3·90	8	8	Weather favourable. Taansplantation of paddy and *marua* has begun. No large import and export. Fodder and water are sufficient.
	Kurseong ..	2·71	8	8	
	Siliguri ..	5·30	10	10	
	Kalimpong ..	1·94	7	(*n*)	
16	Rangpur ..	(*n*)	(*n*)	11	Report not received.
	Nilphamari ..	(*n*)	(*n*)	11½	
	Kurigram ..	(*n*)	(*n*)	12	
	Gaibandha ..	(*n*)	(*n*)	9	
17	Bogra ..	0·49	10½	10½	Sky cloudy with occasional rainfall. Agricultural operation not affected by weather condition. Harvesting of *aus* paddy continues; outturn fair. Fodder and water are sufficient.
18	Pabna ..	0·87	10½	10½	Weather seasonable. Condition of standing crops is satisfactory. Fodder and water are sufficient.
	Serajganj ..	2·36	11½	11½	
19	Malda ..	0·30	10½	10	Weather hot. It has affected standing crops much. Fodder and water are available. Cattle-disease exists in places.
20	Cooch Behar ..	5·04	12 4/16	12 4/16	Weather very hot. Preparation of lands for winter paddy and rearing of seedlings in nursery and transplantation of the same are in progress. Prospects of standing crops are fair. Harvesting of *autumn* crops continues in places. Fodder and water are sufficient. Cattle-disease is reported from Tufanganj, Mekliganj and Dinhata subdivisions.
21	Dacca ..	2·28	10	10	Rainfall at North Sadar (Kapasia) 5·21. Weather seasonable. Prospects of crops appear to be fair. No large export and import. Fodder and water are sufficient. Anthrax is prevalent in Sadar and Narayanganj subdivisions.
	Manikganj ..	1·02	10½	10½	
	Narayanganj ..	2·13	12	12	
	Munshiganj ..	1·82	10½	10½	

(*n*) Not reported.

Serial No.	District and sub-division.	Rainfall.	Price of common rice, in seers, per rupee.		Character of the weather, condition of crops, etc.
			This week.	Previous week.	
1	2	3	4	5	6
		Inches.			
22	Mymensingh ..	0·30	10	10½	Weather seasonable. Condition of crops is fair. Fodder and water are available.
	Jamalpur ..	0·46	10½	10½	
	Tangail ..	1·38	11	11	
	Netrakona ..	0·88	12½	12½	
	Kishorganj ..	1·44	10½	10 11/16	
23	Faridpur ..	(n)	(n)	11	Report not received.
	Goalundo (Rajbari)	(n)	(n)	10½	
	Madaripur ..	(n)	(n)	11½	
	Gopalganj (a) ..	(n)	(n)	12	
24	Bakarganj (Barisal)	1·78	10	10	Weather seasonable. Prospects of standing crops are not satisfactory in Sadar, fair in Pirojpur and Patuakhali and good in Bhola. Fodder and water are sufficient. Cattle-disease exists in Pirojpur and Patuakhali subdivisions.
	Pirojpur ..	7·33	9½	9½	
	Patuakhali ..	4·35	10	10	
	Dakshin Shabazpur (Bhola).	3·31	10	10	
25	Chittagong ..	0·19	10 11*	10 11*	Weather seasonable. Transplantation of *aus* crop is completed and sowing of *aman* crop is in progress. Condition is not favourable for want of sufficient rain. Fodder and water are sufficient. Cattle-disease is reported from places. Panga salt sells at 14 seers at Sadar and 12 seers at Cox's Bazar.
	Cox's Bazar ..	2·15	11	11	
26	Tippera (Comilla) ..	0·59	10	10	Weather condition and prospect of crops are fair.
	Brahmanbaria ..	2·64	10½	10½	
	Chandpur ..	2·40	11½	11½	
27	Noakhali ..	3·97	9	9½	Want of rainfall has affected the standing *aus* crop and jute. Sowing of *aman* seedlings is also being delayed. Fodder and water are available. Cattle-disease still prevails in Feni thana.
	Feni ..	0·40	10½	10 7/10	
28	Chittagong Hill Tracts.	1·19	11	11	Weather seasonable. Its effects are favourable. Fodder and water are sufficient. Cattle-disease still prevails.
29	Tripura State ..	4·60	10	(n)	Weather seasonable. Cattle-disease exists in Sabroom and Belonia Divisions. Cotton sells at Rs. 8 to Rs. 10 and jute at Rs. 2-8 to Rs. 5-8.

(a) The rainfall at Haridaspur, which is very near to Gopalganj, is shown here.
* Burma rice. (n) Not reported.

S. ABDULLAH, for *Director of Agriculture, Bengal.*

Dacca, the 6th July 1936.

Vital statistics of towns with a population of 50,000 and over of the Bengal Presidency for the week ending Saturday, the 27th June 1936.

Districts.	Nos.	Towns.	Population under registration according to Census of 1931.			Births registered.		Deaths registered.																								
			Male.	Female.	Total.	Number registered (excluding still-births).	Still-births registered.	Cholera.	Small-pox.	Plague.	Cerebro-spinal meningitis.	Malaria.	Enteric fever.	Measles.	Relapsing fever (Spirochætal).	Kala-azar.	Influenza.	Other fevers.	Dysentery.	Diarrhœa.	Pneumonia.	Pulmonary tuberculosis.	Other respiratory diseases.	Injuries including suicide.	Deaths from child-birth.	Other causes.	Total of all causes.			Total of corresponding week of the previous year.		
																											Male.	Female.	Total.	Male.	Female.	Total.
Calcutta ..	1	Calcutta ..	778,817	362,045	1,140,862	450	49	25	25	..	8	10	27	2	..	1	8	23	34	10	84	69	49	13	2	247	350	287	637	342	241	583
Burdwan ..	2	Asansol Mining Settlement.	209,544	173,136	382,680	146	3	11	1	..	..	1	..	..	..	..	..	25	2	..	3	1	4	2	7	24	37	44	81	112	95	207
Howrah ..	3	Howrah ..	145,120	79,753	224,873	110	4	11	2	..	..	1	3	..	..	..	..	..	11	6	18	13	19	1	..	35	61	59	120	63	43	106
Dacca ..	4	Dacca ..	79,365	59,153	138,518	62	2	..	2	..	..	..	5	..	..	1	..	..	1	..	16	1	5	2	1	12	29	17	46	45	22	67
24-Parganas	5	Bhatpara ..	60,134	24,841	84,975	37	1	..	6	..	..	..	..	..	..	..	..	18	1	1	..	1	..	..	..	9	26	10	36	11	12	23
	6	Garden Reach	36,131	19,741	55,872	19	..	1	..	..	..	3	..	..	..	..	..	1	4	3	1	..	1	..	..	1	8	7	15	..	..	..
Chittagong ..	7	Chittagong	35,040	18,107	53,156	24	1	1	3	..	..	1	..	..	..	..	..	9	1	..	..	..	..	1	..	6	13	9	22	24	12	36

A. C. CHATTERJI, M.B., D.P.H., MAJOR, I.M.S., *Director of Public Health, Bengal.*

Calcutta, the 3rd July 1936.

FORM C—BENGAL.

STATEMENT OF COTTON PRESSED IN THE BENGAL PRESIDENCY FOR THE WEEK ENDING THE 26th JUNE 1936.

[Section 5 (2) of the Cotton Ginning and Pressing Factories Act, 1925.]

Name of Division or block.	Number of bales pressed.				District included in the block.
	During the week.	During the corresponding week last year.	Since 1st September 1935 (the date prescribed by the Local Government as the commencement of the season).	During the corresponding period last year.	
The Bengal Presidency	2,286 or 2,274·97 bales of 400 lbs. each.	1,936	57,062	36,531	All districts in the Presidency.

J. B. McBRIDE,

Chief Inspector of Factories, Bengal.

Printed and published by the Superintendent, Government Printing, Bengal Government Press, Alipore, Bengal, on the 9th July 1936.

Registered No. C207

The Calcutta Gazette

Extraordinary

Published by Authority

SATURDAY, JULY 11, 1936.

GOVERNMENT OF INDIA.

Legislative Department.

Simla, the 11th July 1936.

NOTIFICATION.

No. F. 100/IV/36-C. & G.—A vacancy having occurred in the Council of State by reason of the acceptance by the Governor General of the resignation of his office by the Honourable Sir George Campbell, Kt., a Member elected to the said Council by the Bengal Chamber of Commerce Constituency, the Governor General is pleased, in pursuance of the provisions of sub-rule (*1*) of rule 26 of the Council of State Electoral Rules, to call upon the Bengal Chamber of Commerce Constituency to elect, in accordance with the said Rules, a person for the purpose of filling the said vacancy on or before the 15th September 1936.

G. H. SPENCE,

Secy. to the Govt. of India.

GOVERNMENT OF BENGAL.

Appointment Department.

NOTIFICATION.

No. 5634A.—11th July 1936.—Whereas by notification No. F. 100/IV/36-C. & G., dated the 11th July 1936, the Governor-General has been pleased to call upon the Bengal Chamber of Commerce Constituency of the Council of State to elect a member to the said Council in the place of the Honourable Sir George Campbell, Kt., resigned;

Now, therefore, the Governor in Council is pleased, in exercise of the powers conferred by clauses (*a*) and (*b*) of sub-rule (2) of rule 11 of the Council of State Electoral Rules, and in pursuance of sub-rule (*3*) of that Rule, to appoint the 24th July 1936 as the date for the nomination of candidates and for the delivery of nomination papers to the Returning Officer and the 25th July 1936 as the date on which the scrutiny of nominations shall be held.

H. J. TWYNAM,

Chief Secy. to the Govt. of Bengal (offg.)

Printed and published by the Superintendent, Government Printing, Bengal Government Press, Alipore, Bengal, on the 11th July 1936.

Registered No. C207

No. 29 of 1936

The Calcutta Gazette

Published by Authority

THURSDAY, JULY 16, 1936.

CONTENTS:

	Page.
Part I.—Orders and Notifications by the Governor of Bengal, the Government of Bengal, the High Court, Government Treasury, etc.	1711—1748
Part IA.—Orders and Notifications by the Government of India republished for general information	187—189
Part IB.—Educational Notices ..	1149—1193
Part II.—Advertisements ..	679—690
Part III.—Acts of the Bengal Legislative Council	*Nil*
Part IV.—Bills introduced in the Bengal Legislative Council, Reports of Select Committees presented or to be presented to that Council, and Bills published before introduction in that Council ..	*Nil*
Part V.—Acts of the Indian Legislature assented to by the Governor-General and Ordinances promulgated under section 72 of the Government of India Act—	
The Parsi Marriage and Divorce Act, 1936	31—42
Part VI.—Bills introduced in the Council of State and Legislative Assembly, Reports of Select Committees presented to the Council and Assembly and Bills published under rule 18 of the Indian Legislative Rules	*Nil*
Supplement No. 29 :—	
Preliminary Forecast of the Jute Crop, 1936	967—981
Cotton Ginning and Pressing Corporation of Calcutta Notice—Weekly Weather and Crop Report—Prices current—Weekly Vital Statistics—River water-levels—Weekly Gauge Readings ..	982—994

PART I

Orders and Notifications by the Governor of Bengal, the Government of Bengal, the High Court, Government Treasury, etc.

Orders by the Government of Bengal.

No. 6053A.

Appointments and Transfers.

GENERAL.

24-Parganas-Rajshahi - Malda. — No. 5572A.— 29th June 1936. Mr. S. K. Gupta, I.C.S., officiating Additional District and Sessions Judge, 24-Parganas, in appointed to act as District and Sessions Judge, Rajshahi and Malda, during the absence, on leave, of Mr. A. F. M. Rahman, I.C.S., or until further orders.

24-Parganas.—No. 5577A. — 29th June 1936.— Babu Satish Chandra Chakrabarti, Subordinate Judge and Assistant Sessions Judge, 24-Parganas, is appointed temporarily to act as an Additional District and Sessions Judge of that district.

Jessore. — No. 5643A. — 2nd July 1936.—The orders of the 20th June 1936, appointing Mr. B. K. Basu, I.C.S., on leave, to be District and Sessions Judge, Jessore, are cancelled.

Jalpaiguri.—No. 5565A.—6th July 1936.—Babu Jitendra Chandra Mazumdar, Deputy Magistrate and Deputy Collector, Jalpaiguri, is appointed temporarily to have charge of the Sadar subdivision of that district.

24-Parganas - Dacca.—No. 5705A.—9th July 1936.—Mr. A. B. Gangoli, I.C.S., Joint Magistrate and Deputy Collector, 24-Parganas, is appointed to have charge of the Munshiganj subdivision of the Dacca district.

Dacca-Jalpaiguri.—No. 5748A.—10th July 1936.—Rai Sahib Bhabesh Chandra Ray, Deputy Magistrate and Deputy Collector, Munshiganj, Dacca, is appointed to have charge of the Sadar subdivision of the Jalpaiguri district.

Leave.

GENERAL.

Rajshahi-Malda.—No. 5567A.—6th July 1936.—Mr. A. F. M. Rahman, I.C.S., officiating District and Sessions Judge, Rajshahi and Malda, is allowed leave on average pay, under rule 81 (*b*) (*ii*) of the Fundamental Rules, from the 24th June 1936 to the 25th July 1936, inclusive.

Mymensingh.—No. 5629A.—7th July 1936.—Mr. Surendra Nath Sen, No. I, Additional District and Sessions Judge, Mymensingh, is allowed leave for four months, with effect from the 12th June 1936, or any subsequent date on which he availed himself of it, viz., privilege leave on full pay for nine days, under the amendment to article 271 of the Civil Service Regulations, and for one month and seven days, under article 260 of the Civil Service Regulations, and commuted furlough on medical certificate for the remaining period, under article 325A of the Regulations.

Khulna.—No. 5699A.—9th July 1936.—Maulvi Mir Husain, Deputy Magistrate and Deputy Collector, on probation, Khulna, was allowed leave on average pay for eleven days, under rule 81 (*b*) (*ii*) of the Fundamental Rules, with effect from the 27th May 1936.

Rajshahi.—No. 5701A.—9th July 1936.—Mr. M. Ahmad, I.C.S., Assistant Magistrate and Collector, Rajshahi, is allowed leave on half average pay for one month, under rule 81 (*d*) of the Fundamental Rules, with effect from the 10th July 1936, or any subsequent date on which he may avail himself of it.

Jessore.—No. 5752A.—10th July 1936.—Babu Anath Bandhu Ray, Deputy Magistrate and Deputy Collector, Jessore, is allowed leave on average pay up to the 17th October 1936, under rule 81 (*b*) (*ii*) of the Fundamental Rules, with effect from the 30th June 1936 or any subsequent date on which he may be relieved.

POLICE.

Presidency Range.—No. 5768A.—13th July 1936.—Mr. L. H. Burton, I.P., Deputy Inspector-General of Police, Presidency Range, is allowed leave on average pay for three months and three days, under rule 81 (*b*) (*i*) of the Fundamental Rules, with effect from the 30th July 1936, or any subsequent date on which he may be relieved, and in continuation leave on half average pay for four months and twenty-two days under rule 81 (*d*) of those Rules.

Bakarganj.—No. 5771A.—13th July 1936.—In modification of the orders contained in notification No. 1016A.D., dated the 15th June 1936, Babu Anath Nath Ganguli, Deputy Superintendent of Police, Bakarganj, is allowed leave for ninety days, with effect from the 23rd June 1936, viz., earned leave for eighty-nine days, under rule 10 of the Bengal Services (Revision of Leave) Rules, 1934, and leave on private affairs for one day, under rule 15(*a*) of those Rules.

H. J. TWYNAM,

Chief Secy. to the Govt. of Bengal (offg.).

POLICE DEPARTMENT.

NOTIFICATION.

No. 2912Pl.—9th July 1936.—In exercise of the powers conferred by section 11 of the Indian Motor Vehicles Act, 1914 (VIII of 1914), the Governor in Council is pleased to make the following amendments in the Calcutta and Howrah Motor Vehicles Rules, 1930, published under notification No. 1398Pl., dated the 19th March 1930, at pages 415-473, Part I of the *Calcutta Gazette* of the 27th March 1930, as subsequently amended :—

Amendments.

I. After rule 44 of the said rules, *insert* the following as a new rule 44A, namely :—

"44A. (1) No person shall cause or permit a motor vehicle which has been registered as a light motor car and for which no public service vehicle licence has been obtained under rule 72 to be let out on hire by private arrangement :

Provided that the Commissioner may at his discretion grant a permit in Form N to an owner to let out a light motor car on hire by private arrangement:

Provided also that the Commissioner may at his discretion authorise in Form O individuals or firms engaged in the *bona fide* business of letting out light motor cars by private arrangement to issue permits for private hire in respect of one or more specified cars. Such permits shall be issued in Form P.

(2) Permits shall be carried at all times by the driver of the vehicle and shall be produced by him on demand made by any police officer. Expired permits shall be forwarded to the Commissioner on such dates and in respect of such periods as he may specify.

(3) An owner to whom a permit has been issued as above, or any firm or individual who may be authorised by the Commissioner to issue such permits shall maintain a register containing the following particulars with reference to every car for which a permit has been issued :—

(*a*) the registered number of the vehicle,

(*b*) the date and time when the vehicle goes out,

(*c*) the name and address of the hirer,

(*d*) the name and licence number of the driver, and

(*e*) the date and time of return of the vehicle.

(4) The Commissioner shall not issue any permits for private hire if he considers that the number already issued is adequate."

II. *Omit* clause (*iii*) of rule 8 of the said rules.

111. *After* Form M appended to the said rules *add* the following Forms :—

" Form N.

(See rule 44A.)

No. M. V.

Public Vehicles Department,
38, Beltola Road,
Calcutta, the 19 .

Mr./Messrs. ..... of .....

is/are permitted to let out car No.....to.....of.....

for private hire between the hours of.....and.....

on/during.....as requested in his/their letter No.....

dated.....

This permit shall be returned to the undersigned on expiry.

Deputy Commissioner of Police.

Form O.

(See rule 44A.)

Mr./Messrs. .....of .....

is/are authorised to issue permits in Form P for private hire in respect of the car/cars, particulars of which are noted below :—

Engine No.

Chassis No.

Number of cylinders

R. A. C. horse-power

Number of seats

Type of body

This authorisation expires on.....

Deputy Commissioner of Police.

Form P.

(See rule 44A.)

To Mr./Messrs. .....

We are authorised by the Commissioner of Police to let out to you on hire by private arrangement car/cars No./Nos.....between the hours of..... and.....on/during.....as requested in your letter No.....dated.....

This permit shall be returned on the date on which it expires.

Seal of the Commissioner of Police will be embossed on this form and the form will be printed as bank cheques.

Messrs.....& Co.

H. J. TWYNAM,

Chief Secy. to the Govt. of Bengal (offg.).

Orders by the Inspector-General of Police, Bengal.

Calcutta.—No. 7573A.—8th July 1936.—**Dinajpur-Calcutta.**—Babu Shyamapada Chatarji, Inspector, Dinajpur, temporarily employed in the Intelligence Branch, is transferred permanently to the Calcutta Police with effect from 17th June 1936.

J. C. FARMER,

Inspector-General of Police (offg.).

JUDICIAL DEPARTMENT.

Appointments and Transfers.

24-Parganas.—No. 5262J.—8th July 1936.—In exercise of the powers conferred by sections 14 and 15 and the proviso to section 357 of the Code of Criminal Procedure, 1898 (Act V of 1898), the Governor in Council is pleased—

(*a*) to confer upon each of the gentlemen named below the powers of a Magistrate of the third class, in the district of the 24-Parganas, for a period of three years from the date of this notification,

(*b*) to direct each of them to sit as a member of the Budge Budge bench in the said district, and

(*c*) to direct each of them to take down evidence in the English language—

Maulvi S. M. Solaiman.

Babu Provash Chandra Dhar.

Jalpaiguri.—No. 5268J.—8th July 1936.—In exercise of the powers conferred by sections 14 and 15 and the proviso to section 357 of the Code of Criminal Procedure, 1898 (Act V of 1898), the Governor in Council is pleased—

(*a*) to confer upon Rai Sahib Satish Chandra Gupta the powers of a Magistrate of the second class, in the district of Jalpaiguri, for a period of three years from the 24th August 1936, in respect to such cases as may be made over to him within the limits of the Sadar subdivision of the said district,

(*b*) to direct that he shall, in addition to sitting singly, sit as a member of the Sadar bench in the said district, and

(*c*) to direct him to take down evidence in the English language.

Dacca.—No. 5270J.—8th July 1936.—In exercise of the powers conferred by sections 14 and 15 and the proviso to section 357 of the Code of Criminal Procedure, 1898 (Act V of 1898), the Governor in Council is pleased—

(*a*) to confer upon Rai Sahib Nishi Kanta Ray the powers of a Magistrate of the first class, in the district of Dacca, for a period of three years from the 29th August 1936, in respect to such cases as may be made over to him within the limits of the Manikganj subdivision of the said district,

(*b*) to direct that he shall, in addition to sitting singly, sit as a member of the Manikganj bench in the said district, and

(*c*) to direct him to take down evidence in the English language.

24-Parganas.—No. 5273J.—8th July 1936.—Babu Amalendu Nath Lahiri, additional munsif of Alipore, in the district of the 24-Parganas, is appointed to be a munsif in the said district to be ordinarily stationed at Basirhat.

24-Parganas-Faridpur.—No. 5276J.—8th July 1936 Babu Kamalesh Chandra Sen, probationary munsif, now employed as a munsif at Basirhat, in the district of the 24-Parganas, is appointed to be a munsif in the district of Faridpur, to be ordinarily stationed at Gopalganj, during the absence, on leave, of Babu Raj Kumar Datta or until further orders.

Rangpur-Bakarganj.- No. 5302J.—9th July 1936.—Mr. Bikas Chandra Ghosh, munsif and assistant settlement officer, Rangpur, is appointed, on reversion to the general line, to be a munsif in the district of Bakarganj, to be ordinarily stationed at Patuakhali, *vice* Mr. Santi Priya Basu.

Dinajpur-Nadia. No. 5306J.—9th July 1936.—Maulvi Md. Akkas Ali Khan, munsif and assistant settlement officer, Dinajpur, is appointed, on reversion to the general line, to be a munsif in the district of Nadia, to be ordinarily stationed at Krishnagar.

Bakarganj-24-Parganas.—No. 5310J.—9th July 1936.—Mr Santi Priya Basu, munsif of Patuakhali, in the district of Bakarganj, is appointed temporarily to act as Additional Subordinate Judge of the 24-Parganas, *vice* Babu Satish Chandra Chakrabatti.

Hooghly.—No. 5313J.—9th July 1936.—In exercise of the powers conferred by sections 14 and 15 and the proviso to section 357 of the Code of Criminal Procedure, 1898 (Act V of 1898), the Governor in Council is pleased—

(*a*) to confer upon Babu Amar Nath Mukharji the powers of a Magistrate of the third class, in the district of Hooghly, for a period of three years from the 29th July 1936, in respect to such cases as may be made over to him within the limits of the Serampore subdivision of the said district,

(*b*) to direct that he shall, in addition to sitting singly, sit as a member of the Serampore bench in the said district, and

(*c*) to direct him to take down evidence in the English language.

24-Parganas. -No. 5322J.- 9th July 1936.-- In exercise of the powers conferred by sections 14 and 15 of the Code of Criminal Procedure, 1898 (Act V of 1898), the Governor in Council is pleased—

(*a*) to confer upon Mr. Theophilus Herbert Thorne the powers of a Magistrate of the third class, in the district of the 24-Parganas, for a period of three years from the date of this notification, and

(*b*) to direct him to sit as a member of the Barasat bench in the said district.

Leave.

Mymensingh.- No. 5324J - 9th July 1936.—Babu Basanta Kumar Ray, Subordinate Judge and Assistant Sessions Judge of Mymensingh, is allowed leave on average pay for eleven days, under rules 81 (*b*) (*i*) and 82 (*b*) of the Fundamental Rules, in extension of the leave already granted to him

NOTIFICATIONS.

Dacca.—No. 5249J.—7th July 1936.- In exercise of the power conferred by section 65 of the Bengal Village Self Government Act, 1919 (Bengal Act V of 1919), the Governor in Council is pleased to appoint Babu Bagala Ranjan Chaudhuri, a member of the Dhankora union board within the Saturia police-station in the Manikganj subdivision of the Dacca district, to be, during his term of office as such member, a member of the union bench within the jurisdiction of the said union board for the purposes of that section, *vice* Babu Mukundalal Banarji, resigned.

Dacca.—No. 5250J.—7th July 1936.—In exercise of the power conferred by section 73 of the Bengal Village Self-Government Act, 1919 (Bengal Act V of 1919), the Governor in Council is pleased to appoint Babu Bagala Ranjan Chaudhuri, a member of the Dhankora union board within the Saturia police-station in the Manikganj subdivision of the Dacca district, to be, during his term of office as such member, a member of the union court within the jurisdiction of the said union board for the purposes of that section, *vice* Babu Mukundalal Banarji, resigned

No 5265J. 8th July 1936 With reference to this department notification No. 4800J., dated the 4th June 1936, published on page 1522 of Part I of the *Calcutta Gazette*, dated the 20th June 1936, and to paragraph 6 of the notification No 14078A., dated the 25th June 1936, published by the High Court, Calcutta, Appellate Side, it is hereby notified for general information that representations for condonation of age from candidates for nomination for appointments as munsifs during 1937 will not be considered by Government unless received by the undersigned on or before the 15th September 1936.

The purpose of this notification is solely to limit the time within which such representations will be received. It is not to be taken in any way as holding out a hope that representations will be favourably considered. Only in the most exceptional circumstances will the age bar be relaxed.

Bogra. No. 5279J 8th July 1936 -- In exercise of the power conferred by section 65 of the Bengal Village Self-Government Act, 1919 (Bengal Act V of 1919), the Governor in Council is pleased to appoint the following members of the union boards mentioned below, to be, during their term of office as such members, union

benches within the jurisdiction of the union boards of which they are, respectively, members for the purposes of that section :—

Bogra district.

Adamdighi police-station.

Chhatingram union board.

Babu Jatindra Nath Mondal.
Babu Jogendra Nath Chaudhuri.
Munshi Ghugur Ali Sardar.
Maulvi Rahim Uddin Mondal.

Panchbibi police-station.

Balighata union board.

Munshi Kalimuddin Sarker.
Munshi Abdul Gaffur Mondal.
Babu Bijay Krishna Sarker.
Babu Indu Madhab Das.

2. This notification will take effect from the date of the first meeting of the reconstituted union boards at which a quorum is present.

Bogra.—No. 5280J.—8th July 1936.—In exercise of the power conferred by section 73 of the Bengal Village Self Government Act, 1919 (Bengal Act V of 1919), the Governor in Council is pleased to appoint the following members of the union boards mentioned below, to be during their term of office as such members, union courts within the jurisdiction of the union boards of which they are, respectively, members for the purposes of that section :—

Bogra district.

Adamdighi police-station.

Chhatingram union board.

Babu Jatindra Nath Mondal.
Babu Jogendra Nath Chaudhuri.
Munshi Ghugur Ali Sardar.
Maulvi Rahim Uddin Mondal.

Panchbibi police-station.

Balighat union board.

Munshi Kalimuddin Sarker.
Munshi Abdul Gaffur Mondal.
Babu Bijay Krishna Sarker.
Babu Indu Madhab Das.

2. This notification will take effect from the date of the first meeting of the reconstituted union boards at which a quorum is present.

Dacca.—No. 5297J.—9th July 1936.—In exercise of the power conferred by section 65 of the Bengal Village Self-Government Act, 1919 (Bengal Act V of 1919), the Governor in Council is pleased to appoint Babu Birendra Narayan Ray, a member of the Kalakopa union board within the Nawabganj police-station in the Sadar (South) subdivision of the Dacca district, to be, during his term of office as such member, a member of the union bench within the jurisdiction of the said union board for the purposes of that section.

Dacca.—No. 5298J.—9th July 1936.—In exercise of the power conferred by section 73 of the Bengal Village Self-Government Act, 1919 (Bengal Act V of 1919), the Governor in Council is pleased to appoint Babu Birendra Narayan Ray a member of the Kalakopa union board within the Nawabganj police-station in the Sadar (South) subdivision of the Dacca district, to be, during his term of office as such member, a member of the union court within the jurisdiction of the said union board for the purposes of that section.

Bogra.—No. 5371J.—11th July 1936.—In exercise of the power conferred by section 65 of the Bengal Village Self-Government Act, 1919 (Bengal Act V of 1919), the Governor in Council is pleased to appoint the following members of the Simabari union board within the Sherpur police-station in the Bogra district to be, during their term of office as such members, a union bench within the jurisdiction of the said union board for the purposes of that section :—

Maulvi Moula Baksha Sarker.
Munshi Rahim Uddin Sarker.
Babu Suresh Chandra Nandi.
Babu Digendra Nath Basak.

2. This notification will take effect from the date of the first meeting of the reconstitued union board at which a quorum is present.

Bogra.—No. 5372J.—11th July 1936.—In exercise of the power conferred by section 73 of the Bengal Village Self-Government Act, 1919 (Bengal Act V of 1919), the Governor in Council is pleased to appoint the following members of the Simabari union board within the Sherpur police-station in the Bogra district to be, during their term of office as such members, a union court within the jurisdiction of the said union board for the purposes of that section :—

Maulvi Moula Baksha Sarker.
Munshi Rahim Uddin Sarker.
Babu Suresh Chandra Nandi.
Babu Digendra Nath Basak.

2. This notification will take effect from the date of the first meeting of the reconstituted union board at which a quorum is present.

Faridpur.—No.. 5376J.—13th July 1936.—In exercise of the power conferred by section 65 of the Bengal Village Self-Government Act, 1919 (Bengal Act V of 1919), the Governor in Council is pleased to appoint the following members of the Bagmara union board within the Rajbari police-station in the Goalundo subdivision of the Faridpur district, to be, during their term of office as such members, a union bench within the jurisdiction of the said union board for the purposes of that section :—

Maulvi Abdul Quader.
Munshi Hatemali Shaikh.
Babu Banka Behari Chakrabatti.
Babu Anath Bandhu Basu.
Munshi Masemali Mridha.

2. This notification will take effect from the date of the first meeting of the reconstituted union board at which a quorum is present.

Faridpur.—No. 5377J.—13th July 1936.—In exercise of the power conferred by section 73 of the Bengal Village Self-Government Act, 1919 (Bengal Act V of 1919), the Governor in Council is pleased to appoint the following members of the Bagmara union board within the Rajbari police-station in the Goalundo subdivision of the Faridpur district, to be, during their term of office as such members, a union court within the jurisdiction of the said union board for the purposes of that section :—

Maulvi Abdul Quader.

Munshi Hatemali Shaikh.

Babu Banka Behari Chakrabatti.

Babu Anath Bandhu Basu.

Munshi Masomali Mridha.

2. This notification will take effect from the date of the first meeting of the reconstituted union board at which a quorum is present.

Faridpur.—No. 5379J.—13th July 1936.—In exercise of the power conferred by section 65 of the Bengal Village Self-Government Act, 1919 (Bengal Act V of 1919), the Governor in Council is pleased to appoint the following members of the Banibaha union board within the Rajbari police-station in the Goalundo subdivision of the Faridpur district, to be, during their term of office as such members, a union bench within the jurisdiction of the said union board for the purposes of that section :—

Babu Tripura Sankor Mazumdar.

Babu Abinash Chandra Das.

M. Abdul Karim Biswas.

Babu Purna Chandra Joardar.

Md. Abdul Ali Mandal.

2. This notification will take effect from the date of the first meeting of the reconstituted union board at which a quorum is present.

Faridpur.—No. 5380J.—13th July 1936.—In exercise of the power conferred by section 73 of the Bengal Village Self Government Act, 1919 (Bengal Act V of 1919), the Governor in Council is pleased to appoint the following members of the Banibaha union board within the Rajbari police-station in the Goalundo subdivision of the Faridpur district, to be, during their term of office as such members, a union court within the jurisdiction of the said union board for the purposes of that section :—

Babu Tripura Sankor Mazumdar.

Babu Abinash Chandra Das.

M. Abdul Karim Biswas.

Babu Purna Chandra Joardar.

Md. Abdul Ali Mandal

2. This notification will take effect from the date of the first meeting of the reconstituted union board at which a quorum is present.

T. ROXBURGH,

Secy. to the Govt. of Bengal (offg.).

LOCAL SELF-GOVERNMENT DEPARTMENT.

NOTIFICATIONS.

Minister-in-charge: The Hon'ble Sir Bijoy Prasad Singh Roy, Kt.

Mymensingh.—No. 5622L.S.-G.—8th July 1936.—In exercise of the power conferred by section 5 of the Bengal Village Self-Government Act, 1919 (Bengal Act V of 1919), and after consideration of the views of the Mymensingh district board and the Sadar local board, the Government of Bengal (Ministry of Local Self-Government) are pleased to direct that each of the following local areas in thanas Gafargaon, Fulbaria and Bhaluka in the Sadar subdivision of the district of Mymensingh shall be declared a union for the purposes of the Act.

2. In exercise of the power conferred by sub-section (*1*) of section 6 of the said Act, the Government of Bengal (Ministry of Local Self-Government) are pleased to establish a union board for each of the unions hereby declared and to fix nine as the number of members of each union board.

3. In exercise of the power conferred by sub-section (*3*) of section 6 of the said Act, the Government of Bengal (Ministry of Local Self-Government) are pleased to direct that one-third of the members of each union board shall be appointed by the District Magistrate on the grounds that such appointment is necessary for the due representation of minorities and of different interest within the union.

4. This cancels so much of notification No. 5035L.S.-G., dated the 12th December 1924, as it relates to Saltia, Raona, Mashakhali, Gafargaon, Usthi, Datterbazar, and Paithal union board, and so much of notification No. 111L.S.-G., dated the 11th January 1930, as it relates to Ramnagar union board, police-station Fulbaria :—

Mymensingh district board.

Sadar local board.

Gafargaon thana.

Names of mauzas constituting the local area with their number in the jurisdiction list.

Raona union.

Digha	.	61
Raona	...	66
Dhobaghat	.	83
Panchua	...	84
Kharuamukunda	..	112
Kharuabarail	.	113
Chhaybaria	...	114
Lautail	...	115
Changbirai	...	116

Names of mauzas constituting the local area with their number in the jurisdiction list.		
Saltia union.		
Rouha	...	89
Gaziapara	...	102
Bagua	...	103
Hatipara	...	104
Saltia	...	105
Jonmeyjoy	...	106
Sholabashia	...	107
Raghaichati	...	108
Pukhuria	...	109
Haturia	...	111
Kalairpar	...	138
Dhamail Jaleswar	...	139
Silashi	...	140
Nagar Hosenabad	...	141
Jasara union.		
Palaikanda	...	67
Kurshapur	...	68
Kathulidanga	...	69
Khodabakshapur	...	70
Jasara	...	80
Telibhita	...	81
Muguriapara	...	82
Bharail	...	85
Atharadana	..	86
Parabharat	..	87
Doulatpur	...	88
Gandagram	...	110
Masakhali union.		
Lengtipara	...	51
Kandi	...	52
Risaba	...	53
Belaba	...	54
Mukhi	...	59
Baldi	...	60
Aulajor	...	117
Aukapura	..	118
Bhaturi	...	119
Masakhali	...	120
Daricharbaria	...	121
Birkharua	...	130
Gafargaon union.		
Grambasatia	...	129
Autbaria	...	131
Basatia	...	132
Hatikhola	...	133
Bangaon, 1st portion	...	134
Chakuthuri	...	135
Bangaon, 2nd portion	...	136
Sharaikanda	...	137
Tentulia	...	142

Names of mauzas constituting the local area with their number in the jurisdiction list.		
Gafargaon	...	143
Doulatkhunbari	...	144
Khanabari uttar	...	145
Munsirgaon	...	146
Uthuri	...	147
Mahirkharua	...	148
Ghagra	...	149
Porabari	...	181
Naokhala	...	182
Sipan	...	183
Joynakanda	...	184
Parsipara	...	185
Garaber	...	186
Dogachhia	...	188
Usthi union.		
Souli	...	175
Nagarkandi	...	176
Bhusharbari	...	177
Kandapara	...	178
Paltipara	...	179
Barabari	...	180
Khilgaon	...	189
Dhairgaon, 2nd portion	...	190
Kalurgaon	...	191
Dhairgaon, 1st portion	...	193
Haripur	...	194
Baruipara	...	195
Hurarbari	...	196
Katiapara	...	197
Usthi	.	198
Kismatsanjib	...	199
Baliharina	...	200
Sanjib	...	201
Bakshi	...	222
Baghergaon	..	223
Terasri	...	224
Kandipara	...	225
Nayabari	...	226
Diargaon	...	192
Panchbhag union.		
Utterharina	...	202
Panchbhag	...	203
Jhaoail	...	204
Taratia	...	205
Dighirpar	...	206
Sanjail	...	207
Sakchura	...	208
Amatia	...	209
Charsakchura	...	210
Nalchira	...	211
Raibar	...	212
Chauka	...	213
Bagber	...	214
Khurshimul	...	215

Names of mauzas constituting the local area with their number in the jurisdiction list.		
Gavisimul	...	216
Dakshinharina	...	217
Chargavisimul	...	218
Charlanipur	...	219
Charbiswanath	...	220
Lamkain	...	221
Longair union.		
Chakpadra	...	122
Amkhola	...	123
Charibaria	...	124
Bagher	...	125
Kazirhati	...	126
Kuksair	...	127
Datternaopara	...	128
Maizbari	...	150
Bagbari	...	151
Longair	...	152
Satarabari Golabari	...	156
Kaza	...	157
Satarabari	...	170
Sailsap	...	171
Faridpur	...	172
Bangalkandi	...	173
Saidpara	...	174
Datterbazar union.		
Anturertenk		165
Pagla	...	166
Ekra	...	167
Balipara	...	168
Malmalgatipara	...	169
Sholapunia	...	227
Dakshin Naopara	...	228
Mayra	...	229
Pachuli	...	230
Kanyamandal, 1st portion	...	231
Jatrasidhi	...	232
Baraigaon	...	233
Charlamkain	...	234
Birai	...	235
Badebasia	...	236
Paithal union.		
Neoka	...	153
Khilpara	...	154
Gubri	...	155
Deilpara	...	158
Dubail	...	257
Ghila	...	258
Chhotabarai	...	259
Barai	...	260
Paithal	...	261

Names of mauzas constituting the local area with their number in the jurisdiction list.		
Fulbaria thana.		
Rangamatiya union.		
Rangamatiya	...	75
Akta	...	60
Anuhadi	...	61
Bishnurampur	...	59
Anantapur	...	76
Haripur	...	78
Inayetpur union.		
Gopinathpur	...	77
Inayetpur	...	80
Betbari	...	83
Dolma	...	124
Kalgaon	...	125
Kaladaha union.		
Kaladaha	...	57
Bidyananda	...	89
Patira	...	86
Sibrampur	...	58
Susuti	...	79
Horebari	...	85
Achhimpatuli union.		
Achhimpatuli	...	87
Basdi	...	84
Ramnagar	...	88
Langalsimul	...	120
Bhabanipur union.		
Bhabanipur	...	82
Urpa	...	81
Jaypur	...	123
Maheshpur	...	122
Kandania	...	121
Mukshapur union.		
Konabakhai	...	118
Nijbakhai	...	119
Sankibhanga	...	117
Kaitarbari	...	116
Lalpur	...	115
Sapkhali	...	114
Phuti	...	113
Mukshapur	...	111
Bhaluka thana.		
Uthura union.		
Dhalikuri	...	1
Uthura	...	2
Hatiber	...	3
Bangaon	...	4

Names of mauzas constituting the local area with their number in the jurisdiction list.		
Jatia	...	5
Narangi	...	6
Marchi	...	7
Chamiadi	...	286
Kayadi	...	287
Meduari union.		
Lohabai	...	14
Lohabai	...	15
Baradi	...	16
Meduari	...	19
Bharadoba union.		
Nasinda	...	20
Bhoradoba	...	21
Purura	...	22
Bhatgaon	...	28
Rangchapra	...	31
Mallikbari union.		
Mallikbari	...	12
Bhayabaha	...	13
Satenga	...	17
Bhandabo	...	18
Dhamsur	...	34
Dakatia union.		
Panchgaon	...	8
Sonakhali	...	9
Chandpur	...	10
Hossenpur	...	283
Angargara	...	284
Katlamari	...	285
Dakatia	...	290
Kachina union.		
Palgaon	...	11
Kadigar	...	278
Kachina	...	279
Muchira	...	280
Dhakuria	...	281
Hariswar	...	282
Habirbari union.		
Nandipara	...	271
Habirbari	...	274
Jamirdia	...	275
Kasurgar	...	276
Paragaon	...	277
Jhalapaja	...	288
Monoharpur	...	289

Jessore.—No. 5611M.—8th July 1936.—In exercise of the power conferred by section 506 of the Bengal Municipal Act, 1932 (Bengal Act XV of 1932), the Government of Bengal (Ministry of Local Self-Government) are pleased to confirm the by-laws framed by the Commissioners of the Jessore Municipality in the district of Jessore under section 245 (*a*) and (*b*) of the said Act and published for information under notification No. 905M., dated the 5th February 1936.

Calcutta.—No. 5659M.—10th July 1936.—In exercise of the power conferred by the proviso to sub-section (*4*) of section 22 of the Calcutta Municipal Act, 1923 (Bengal Act III of 1923), the Government of Bengal (Ministry of Local Self-Government) are pleased to remove the disqualifications incurred by Rai Saheb Probodh Chandra Roy in failing to lodge his return of expenses in respect of the last general election of Councillors of Calcutta Corporation for Ward No. 8.

24-Parganas. No. 5668M.—10th July 1936.—In exercise of the power conferred by section 20 of the Bengal Municipal Act, 1932 (Bengal Act XV of 1932), and after consideration of the views of the Commissioners of the Kamarhati Municipality at a meeting, the Government of Bengal (Ministry of Local Self-Government) are pleased to determine that the number of Commissioners to be elected from existing Wards I and II of the said Municipality shall be as shown below against each of these wards:

No. of ward	No. of Commissioners to be elected.	No. of seats included in column 2, reserved for the minority community.
1	2	3
I	4	3
II	2	..

2. This modifies so much of notification No. 899M., dated the 6th February 1933, as relates to the allocation of elected seats to Wards I and II of the Kamarhati Municipality.

24-Parganas.—No. 5691M.—13th July 1936.—In exercise of the power conferred by section 506 of the Bengal Municipal Act, 1932 (Bengal Act XV of 1932), the Government of Bengal (Ministry of Local-Self Government) are pleased to confirm the by-laws framed by the Commissioners of the Barrackpore Municipality in the district of 24-Parganas, under section 490 of the said Act and published for information under notification No. 192M., dated the 11th January 1936.

CORRIGENDUM.

Minister-in-charge: The Hon'ble Sir Bijoy Prasad Singh Roy, Kt.

No. 5689M.—13th July 1936.—In line 2 of paragraph 2 of the notification No. 3044M., dated the 17th May 1935, published at pages 1006-1010 of Part 1 of the *Calcutta Gazette*, dated the 13th June 1935, *read* 15th August 1936 *for* 8th August 1935.

Medical.

Minister-in-charge: The Hon'ble Sir Bijoy Prasad Singh Roy, Kt.

Burdwan-Faridpur.—No. 2882 Medl.—6th July 1936.—Dr. Harish Chandra Sen, officiating Civil Surgeon, Burdwan, on relief, is appointed to act, until further orders, as Civil Surgeon, Faridpur, *vice* Dr. Dhirendra Nath Sen.

Faridpur-Tippera. — No. 2883Medl.—6th July 1936.—Dr. Dhirendra Nath Sen, officiating Civil Surgeon, Faridpur, on relief, is posted to the Brahmanbaria subdivision and dispensary in the district of Tippera.

Tippera.—No. 2914Medl.—8th July 1936.—Dr. Prafulla Ranjan Das Gupta, under orders of transfer to the Brahmanbaria subdivision in the district of Tippera, is granted leave on average pay for one month on medical certificate under the proviso to Fundamental Rule 81 (*b*) (*ii*) in extension of the leave already granted to him in notification No. 1049Medl., dated the 3rd March 1936.

Calcutta.—No. 2917Medl.—8th July 1936.—Lieut. R. Clarkson, I.M.D., House Surgeon, Presidency General Hospital, Calcutta, is granted furlough under the Military Rules for six months, in extension of the leave already granted to him in notification No. 1554Medl., dated the 20th March 1936.

Calcutta.—No. 2938Medl.—10th July 1936.—Lt.-Col. S. A. McSwiney, I.M.S., officiating Professor of Obstetrics, Medical College, Calcutta, is granted leave for the period from the 13th October 1935 to the 17th October 1936, viz., leave on average pay for five months and on half average pay for the remaining period, under rules 81 (*b*) (*i*) and 81 (*d*) of the Fundamental Rules.

2. This department notification No. 326T.-Medl., dated the 27th September 1935, is hereby cancelled.

NOTIFICATION.

Minister-in-charge: The Hon'ble Sir Bijoy Prasad Singh Roy, Kt.

Dinajpur.—No. 2866Medl.—4th July 1936.—The appointment of the following gentlemen as members of the committee for the management of the Nalahar Homœopathic Charitable Dispensary in the district of Dinajpur is notified for general information :—

Maulvi Nasiruddin Ahmed Chowdhury, Vice-Chairman, district board, Dinajpur, Chairman of the Committee.

Maulvi Hashar Mohammed Chowdhury, zamindar, Nalahar.

Maulvi Kasiruddin Chowdhury, zamindar, Nalahar, Secretary.

Munshi Akalu Mohammad Sarkar, jotedar, Nalahar.

Munshi Rafiuddin Ahmed, jotedar, village Tajpur.

Munshi Khadem Ali Ahmed, jotedar, village Jamalpur.

Public Health.

NOTIFICATIONS.

Calcutta-Chittagong.—No. 2561P.H. — 9th July 1936.—It is hereby notified for general information that the town and port of Calicut have been declared free from plague and that the regulations for the prevention of the introduction of plague by sea, which were imposed in the ports of Calcutta and Chittagong against vessels arriving from Calicut, are hereby withdrawn.

Minister-in-charge: The Hon'ble Sir Bijoy Prasad Singh Roy, Kt.

Murshidabad.—No. 2526P.H.—4th July 1936—Under rule 7 of the Local Authorities Loan Rules, 1915, as subsequently amended, it is hereby notified for general information that the Government of Bengal (Ministry of Public Health) intend to sanction the following application from the district board of Murshidabad for a loan of Rs. 20,000 from Government for water-supply bearing interest at 4 per cent. per annum and repayable in ten annual instalments of Rs. 2,465-13-1 each, towards which Government will make a grant of Rs. 373, out of the annual provision of Rs. 2 lakhs in the Public Health budget for improvement of rural water-supply, unless good reasons are shown to the contrary within one month from the date of publication of this notification within the district board area.

Loan Application by Murshidabad District Board.

1	2	3	4	Receipts of loan. (a)	(b)	(c)	(d)	(e)	Repayment of loan. (f)	(g)
The work or works for which the loan is required and an estimate of the cost thereof.	The amount which it is proposed to borrow.	The fund or funds on the security of which it is proposed to borrow.	The law or laws under which the said fund or funds is or are levied, received or held.	The period for which the loan is required.	The rate of interest at which it is proposed to borrow.	The number of instalments in which it is proposed that the loan should be taken.	The amount of each instalment.	The date proposed for receiving each instalment.	The number of instalments in which the loan is repayable and the dates of payments thereof.	The amount of each instalment.
Improvement of rural water-supply.	Rs. 20,000.	District Fund of Murshidabad.	Act III (B. C.) of 1885.	Ten years.	4 per cent.	In one instalment of Rs. 20,000.	Rs. 20,000.	15th August 1936.	In ten yearly equated instalments payable on 15th August each year commencing from 15th August 1937.	Rs. 2,405-13-1 towards which Government will make a grant of Rs.373 in accordance with paragraph 2 (1) of Circular Nos. 1148-52P.H., dated 24-3-1936.

Financial position of the District Board.

Revenue (details) of each of the preceding three years.				Expenditure (details) for each of the preceding three years.				The normal surplus which may be expected in future, i.e., the difference between the average ordinary income and the average ordinary expenditure calculated on the figures in columns 13 to 15 and 17 to 19.	Remarks.
Sources from which the revenue is derived.	Amount for— 1933-34.	1934-35.	1935-36.	Objects for which the expenditure is incurred.	Amount for— 1933-34.	1934-35.	1935-36.		
12	13	14	15	16	17	18	19	20	21
	Rs.	Rs.	Rs.		Rs.	Rs.	Rs.		
	566	2,218	5,039	Refunds and draw-backs ..	..	..	..		
Land Revenue ..	2,17,613	2,57,016	2,50,069	Land Revenue	..	..	..		
Local rates ..	2,181	3,262	4,444	Local rates	..	..	..		
Interest ..	1,346	887	90	Interest on loans	..	..	..		
Law and Justice ..	294	152	34	General Administration ..	14,450	17,173	19,052		
Police ..	48,643	50,461	..	Law and Justice	459	416	764		
Education ..	51,524	41,086	1,600	Police	111	212	85		
Medical ..	..	..	59,406	Ports and Pilotage ..	..	..	..		
Public Health ..	55	68	61	Education ..	83,219	84,119	42,786		
Scientific and other minor departments.	..	..	..	Medical	41,471	29,508	32,647		
Contribution for pensions and gratuities.	..	..	..	Public Health	75,380	78,280	78,596		
Stationery and Printing ..	..	..	..	Scientific and other minor departments.	6,851	6,566	6,565		
Miscellaneous ..	..	103	195	Superannuation allowances, etc.	4,815	5,305	4,759		
Railways ..	..	..	..	Stationery and Printing ..	989	1,025	1,150		
Local canal receipts ..	..	..	..	Miscellaneous	13,922	17,475	8,918		
Civil Works ..	1,02,224	86,398	89,082	Famine relief	..	23,956	22,044		
				Railways	..	..	..		
Total Ordinary Income ..	4,24,466	4,41,651	4,10,020	Minor works and navigation ..	..	..	..		
				Civil Works ..	1,51,143	1,49,547	1,60,363		
				Repayment of loans ..	..	..	..		
Extraordinary debt (Debt, Deposits, etc.).	14,990	53,684	44,910						
		4,787	6,884	Total Ordinary Expenditure	3,92,810	4,13,582	3,77,739		
		9,311	10,363						
Receipts of abnormal character (Test work).	..	60,000	17,000	Extraordinary debt (excluding repayment of loan).	14,397	7,239	7,940		
						5,142	6,369		
				Expenditure for loan funds and from grants included under the head "Receipts of abnormal character."	..	85,750	65,212		
						32,718	37,930		
Total .	4,39,456	5,69,433	4,80,177						
Opening balance ..	31,090	63,339	88,341	Total ..	4,07,207	5,44,431	4,95,190		
				Closing balance	63,339	88,341	82,328		
GRAND TOTAL ..	4,70,546	6,32,772	5,77,518	GRAND TOTAL ..	4,70,546	6,32,772	5,77,518	Rs. 30,669	It may be pointed out that this loan of Rs. 20,000 is only a part of the bigger proposed loan of Rs. 60,000 for which application will shortly follow.

In addition to the details required on the reverse clear information should be given below under the following heads :—

(*a*) If the ordinary surplus is insufficient to meet the charges of the proposed loan, the particular steps which the district board has taken in order to make good the difficulty.	(*a*) Ordinary surplus is sufficient to meet the charges of the loan.
(*b*) Possible means of increase in the revenues of the district board.	(*b*) At present none.
(*c*) A statement of all outstanding loans specifying in respect of each loan, the date when taken the purpose (very briefly), the amount, the annual charges involved and the amount still payable.	(*c*) No outstanding loan.
(*d*) Any explanations in regard to receipts and expenditure to show the true financial position of the district board when such position is otherwise than the ordinary surplus would indicate.	(*d*) The district board is spending money towards alleviating the distress of the landless labourers due to scarcity in recent years. This has greatly increased its expenditures over the normal expenditures which could be safely diverted to other normal activities of the board. In spite of these the closing balances it has maintained in these years, viz., Rs. 63,339, Rs. 88,341 and Rs. 82,328. Leave much towards providing safely as much as Rs. 10,000 towards repayment of further loans of a higher amount for which application will follow. To meet exigencies, the district board is maintaining a fairly larger closing balances in these years. The Government contribution towards water-supply which the district board will have every year will also help much towards repayment of the loan with greater ease to the district board.

ERRATUM.

Minister-in-charge: The Hon'ble Sir Bijoy Prasad Singh Roy, Kt.

No. 2664P.H.—11th July 1936.—In line 4 of paragraph 1 (*e*) of notification No. 1724P.H., dated the 8th May 1936, *read* " Rs. 731-13-4 " *for* " Rs. 1,463-10-8 ".

G. S. DUTT,

Secy. to the Govt. of Bengal.

EDUCATION DEPARTMENT.

NOTIFICATIONS.

Darjeeling.—No. 2160Edn.—10th July 1936.—Mr. C. A. Price, officiating Geography Master, Victoria Boys' School, Kurseong, is confirmed in the appointment, with effect from the 4th May 1935, *vice* Mr. A. R. Greene, retired.

Minister-in-charge: The Hon'ble Khan Bahadur M. Azizul Haque.

No. 2147Edn.—10th July 1936.—The following draft of a notification, which the Government of Bengal (Ministry of Education) propose to issue in exercise of the power conferred by sub-section (*1*) of section 66 of the Bengal (Rural) Primary Education Act, 1930 (Bengal Act VII of 1930), is published for the information of persons likely to be affected thereby.

2. The draft will be taken into consideration one month after its publication in the *Calcutta Gazette*, and any objection or suggestion with respect thereto, which may be received by the undersigned before that date, will be duly considered :—

Draft notification.

In exercise of the power conferred by sub-section (*1*) of section 66 of the Bengal (Rural) Primary Education Act, 1930 (Bengal Act VII of 1930), the Government of Bengal (Ministry of Education) are pleased to make the following rules :—

Rules under section 66 (1) of the Bengal (Rural) Primary Education Act, 1930, regarding procedure of crediting school fees collected in primary schools into the District Primary Education Fund.

1. All schools fees, if any, collected in primary schools maintained by the Board shall be credited to the District Primary Education Fund as required by clause (IX) of sub-section (*1*) of section 37 of the Act by means of a form of book credit.

2. The form of book credit shall be as follows :—

(*a*) The teachers of a primary school maintained by the Board shall submit to the Board at the end of each quarter a statement showing the fees realised from children in the school during the last quarter together with a receipt for the sum realised.

(*b*) The Board on the strength of such statement and receipt, shall make necessary entries on the "receipt" and "expenditure" sides of the Cash Book.

Chittagong.—No. 2156Edn.—10th July 1936.—Miss Surama Biswas, Head Mistress, Dr. Khastagir's High School for Girls, Chittagong, is allowed leave on average pay out of India, Ceylon and Nepal for two months and fifteen days with effect from the 1st August 1936, under the proviso to rule 81 (*b*) (*ii*) of the Fundamental Rules, and in continuation study leave for ten months, under rules 1A, 2 and 3 of the Study Leave Rules.

Howrah.—No. 2163Edn.—10th July 1936.—Mr. Sudhir Ranjan Sen Gupta, officiating Professor of Mathematics, Bengal Engineering College, is appointed substantively to the Bengal Educational Service as Lecturer in Civil Engineering of the college, with effect from the 1st April 1935.

Darjeeling.—No. 2178Edn.—10th July 1936.—Mr. Charu Chandra Nundy, officiating Head Master, Darjeeling Government High School, is confirmed in his present appointment and in the Bengal Educational Service (revised scale), with effect from the 21st February 1936, *vice* Babu Monomohan Ghosal.

Bogra.—No. 2181Edn.—10th July 1936.—Khan Bahadur Maulvi Mirza Abu Jaafar, officiating Inspector of Schools, Presidency Division, is allowed leave on average pay for two days, with effect from the 17th May 1936, under rule 81(*b*) (*ii*) of the Fundamental Rules, in extension of the leave already granted to him under the orders of the 22nd May 1936.

Dacca Division.—No. 2189Edn.—10th July 1936.—Miss Mira Sarkar is appointed to act in the Bengal Educational Service (Women's Branch) as Assistant Inspectress of Schools, Dacca Division (Bakarganj and Faridpur), with effect from the date on which she joins the appointment, *vice* Miss Niranjan Kumari Bairagi, on leave, or until further orders.

Presidency Division.—No. 2192Edn.—10th July 1936.—Miss Mrinalini Bose, Assistant Inspectress of Schools, Presidency Division (Nadia and Murshidabad), is allowed leave on average pay on medical certificate for eight months, with effect from the 22nd June 1936, under the proviso to rule 81 (*b*) (*ii*) of the Fundamental Rules.

Rajshahi.—No. 2211Edn.—11th July 1936.—The Government of Bengal (Ministry of Education) are pleased to nominate Maulvi Muhammad Mobarak Ali Khan, B.L., as a Muhammadan member of the Board of Management of the "Basanta Kumar Roy Charitable Endowment Fund", Rajshahi, constituted in this department notification No. 295T.Edn., dated the 12th May 1936.

Registration.

NOTIFICATIONS.

Minister-in-charge: The Hon'ble Khan Bahadur M. Azizul Haque.

Chittagong.—No. 442Regn.—10th July 1936.—Maulvi Saleh Ahmed, District Sub-Registrar, Chittagong, is allowed leave on average pay for a further period of ten days, with effect from the 11th June 1936, under Fundamental Rule 81(*b*) (*ii*), in extension of the leave already granted to him in terms of notification No. 3536T.-Regn., dated the 23rd June 1936.

Mymensingh.—No. 447Regn.—10th July 1936.—In exercise of the power conferred by section 3 of the Bengal Muhammadan Marriages and Divorces Registration Act, 1876 (Bengal Act I of 1876), the Government of Bengal (Ministry of Education) are pleased to appoint Maulvi Md. Yakub temporarily to be a Muhammadan Registrar within the undermentioned unions and villages in the police-station of Mirzapur, in the district of Mymensingh, during the absence, on leave, of Maulvi Md. Hatem Ali, or until further orders :—

Police-station—Mirzapore.

Union—Mirzapore III.

No.

89 Ichail.
96 Bhadgram.
97 Bagjan.
98 Dulla Begum.
99 Dulla Munsur.
100 Musuria Ghona.
101 Guriail.
102 Postkamari.
103 Baimhati.
104 Mirzapur.
105 Andhara.
106 Sriharipara.
107 Kantaliya.
108 Burihati.
109 Ghugi.
110 Bhaora.
111 Bajo Chuattar.
112 Chuattar.
113 Asta Munsia.
114 Knichtara.
115 Singjura.
118 Sarishadair.

Union—Warshi VI.

No.

55 Maishamuri.
56 Pang Matang.
58 Nagarpara.
59 Mustafapur.
60 Masdai.
61 Sibpur Chanduntara.
62 Naogram.
63 Kaila Bhatta.
64 Aruha.
65 Dakhili.
66 Safarta.
67 Deolipara.
68 Uarshi.
69 Haluapara.
70 Khailsindur.
71 Karra.
72 Nagar Bhadgram.
73 Autpara.
116 Saja Nilgha.
117 Banda Kaoaljani.
118 Ag Niljha.
119 Bardhanpara.
120 Uttar Rowail.
121 Baratia.
124 Dopatia.

Union—Bahuria VII.

122 Horia.
123 Jalsuka.
125 Paikhar.
126 Fatepur.
127 Chamutia.
128 Chandpur.
129 Marisan.
130 Mayur Bhanga.
131 Anurai Telipara.
132 Gabra.
133 Bil Gazaria.
134 Dighalia.
135 Kahetra.
136 Betrasin.
137 Chandulia.
138 Garamara.
139 Anailbari.
140 Gohailbari.
141 Gabra.
142 Sasadharpatti.
143 Kamarpara.
144 Araipara.
145 Keshabpur.
146 Bahuria.

Union—Gorai VIII.

147 Kot Bahuria.
149 Mir Deohata.
150 Kadim Deohata.
151 Rashid Deohata.
152 Baimail.
153 Kalimajani.
154 Path hara.
155 Rajabari.
156 Bhanubaha.
157 Ranasail.
158 Dherua.
159 Kodalia.
160 Rahimpur.
161 Gorai.

Union—Ajgama IX.

No.

162 Bhulua.
163 Chandpur.
164 Latifpur.
167 Boar Kumarjani.
168 Garail.
189 Goraki.
193 Kuratali.
194 Ghagrai.
195 Beltali.
196 Polashtali.
198 Ajgana.
199 Mazidpur.
200 Chiteswari.
207 Jelinea.
197 Kuripara.

Union—Tarappur X.

170 Takia Kadma.
185 Tarap-pur.
186 Danhatali.
187 Gajeswari.
188 Awralail.
189 Pakua.
190 Bastali.
191 Haritaki Tala.
192 Chitmohamadpur.
201 Panch Gaon.
202 Talipara.
203 Nayapara.
204 Gaira Betil.
205 Bangshi Nagar.
206 Bankhari.

Mymensingh.—No. 448Regn.—10th July 1936.—In exercise of the power conferred by section 2 of the Kazis' Act, 1880 (Act XII of 1880), the Government of Bengal (Ministry of Education) are pleased to appoint Maulvi Md. Yakub temporarily to be the Kazi for the celebration of marriages and the performance of other rites and ceremonies within the undermentioned unions and villages in the police-station of Mirzapur, in the district of Mymensingh, during the absence, on leave, of Maulvi Md. Hatem Ali, or until further orders :—

Police-station—Mirzapur.

Union—Mirzapur III.

No.

89 Ichail.
96 Bhadgram.
97 Bagjan.
98 Dulla Begam.
99 Dulla Munsur.
100 Musuria Ghona.
101 Guriail.
102 Postkamari.
103 Baimhati.
104 Mirzapur.
105 Andhara.
106 Sriharipara.
107 Kantaliya.
108 Burihati.
109 Ghugi.
110 Bhaora.
111 Bajo Chuattar.
112 Chuattar.
113 Asta Munsia.
114 Kuichtara.
115 Singjura.
118 Sarishadair.

Union—Warshi VI.

No.	
55	Maishamuri.
56	Paug Matang.
58	Nagarpara.
59	Mastafapur.
60	Masdai.
61	Sibpur Chandumara.
62	Naogram.
63	Kaila Bhatta.
64	Aruha.
65	Dakhili.
66	Satarta.
67	Deolipara.
68	Uarshi.
69	Haluapara.
70	Khailsindur.
71	Kurra.
72	Nagar Bhadgram.
73	Autpara.
116	Saja Nilgha.
117	Banda Kaoaljani.
118	Ag Niljha.
119	Bardhanpara.
120	Uttar Rowail.
121	Baratia.
124	Dopatia.

Union—Bahuria VII.

122	Horia.
123	Jalsuka.
125	Paikhar
126	Fatepur.
127	Chamutia.
128	Chandpur.
129	Marisan.
130	Mayur Bhanga.
131	Amrai Telipara.
132	Gabra
133	Bil Gazaria.
134	Dighalia.
135	Kahetra.
136	Betrasin.
137	Chandulia.
138	Garamura.
139	Anaibari.
140	Gohailbari.
141	Gabra.
142	Sasadharpatti
143	Kumarpara.
144	Araipara.
145	Keshabpur.
146	Bahuria.

Union—Gorai VIII.

147	Kot Bahuria.
149	Mir Deohata.
150	Kadim Deohata
151	Rashid Deohata.
152	Baimail.
153	Kalimajani.
154	Path hara.
155	Rajabari.
156	Bhanuabaha.
157	Ranasail.
158	Dherua.
159	Kodalia.
160	Rahimpur.
161	Gorai.

Union—Ajgama IX.

No.	
162	Bhulua.
163	Chandpur.
164	Latifpur.
167	Boar Kumarjani.
168	Garail.
189	Goraki.
193	Kuratali.
194	Ghagrai.
195	Beltali.
196	Polashtali.
198	Ajgana.
199	Mazidpur.
200	Chiteswari.
207	Jelinea.
197	Kuripara.

Union—Tarappur X.

170	Takia Kadma.
185	Tarap-pur.
186	Danhatali.
187	Gajeswari.
188	Awrahail.
189	Pakua.
190	Bastali.
191	Haritaki Tala.
192	Chitmohamadpur.
201	Panch Gaon.
202	Talipara.
203	Nayapara.
204	Gaira Betil.
205	Bangshi Nagar.
206	Bankhari.

Calcutta.—No. 453Regn. 10th July 1936.—Rai Sahib Mohini Chandra Batabyal, Registrar of Assurances, Calcutta, is allowed leave on average pay for nine days, under rule 81 (*b*) (*ii*) of the Fundamental Rules, in extension of the leave already granted to him.

Murshidabad. No. 456Regn. 11th July 1936. Maulvi Abul Khair Muhammad Siddiq, officiating District Sub Registrar of Murshidabad, is allowed leave on average pay for two months, on medical certificate, under the proviso to rule 81 (*b*) (*ii*) of the Fundamental Rules, in extension of the leave already granted to him.

H. GRAHAM,
Secy. to the Govt. of Bengal.

Orders by the Director of Public Instruction, Bengal.

Bengal Educational Service.

Bankura. No. 32B.—30th June 1936.—Babu Umesh Chandra De, District Inspector of Schools, Bankura, in the Bengal Educational Service, is granted privilege leave for one month, under article 260 of the Civil Service Regulations, with effect from 16th June 1936, or any subsequent date on which he availed himself of it.

Presidency Divn. — No. 33B. — 2nd July 1936. —Khan Sahib Maulvi Abdul Khaleq, officiating Assistant Inspector of Schools for Muhammadan Education, Presidency Division, in the Bengal Educational Service, is declared, in terms of Fundamental Rule 81 (*b*) (*ii*), to have been on leave on average pay for fourteen days from the 1st June 1936.

Khulna - Chittagong Divn. — No. 34B. — 6th July 1936.—Babu Ramesh Chandra Chakrabartty, District Inspector of Schools, Khulna, under orders of transfer as Second Inspector of Schools, Chittagong Division, in the Bengal Educational Service, is granted leave on average pay for one month, under Fundamental Rule 81(*b*)(*ii*), in extension of the leave granted to him in this office notification No. 26B., dated the 9th May 1936.

J. M. BOTTOMLEY,

Director of Public Instruction, Bengal.

Orders by the Inspector-General of Registration, Bengal.

Midnapore.—No. 397.—6th July 1936.—Babu Gauri Sankar Mukharji, officiating Sub-Registrar of Dantan, in the district of Midnapore, is allowed leave on average pay or fifteen days, under rule 81(*b*)(*ii*) of the Fundamental Rules, with effect from the 14th July 1936, or any subsequent date on which he may be relieved.

Pabna. — No. 398.—6th July 1936. — Maulvi Faizuddin Ahmed, Joint Sub-Registrar of Ullapara at Salanga, in the district of Pabna, is allowed leave on average pay for two months, under rule 81(*b*)(*ii*) of the Fundamental Rules, with effect from the date on which he may be relieved.

Dacca-Pabna. — No. 399. — 6th July 1936.— Maulvi A. M. Azharul Islam Bhuian, Sub-Registrar attached to the Sadar Registration office at Dacca, is appointed to act as Joint Sub-Registrar of Ullapara at Salanga, in the district of Pabna, during the absence, on leave, of Maulvi Faizuddin Ahmed, Sub-Registrar, or until further orders.

Noakhali.—No. 400.—6th July 1936.—Babu Makhan Lal Ghosh, probationary Sub-Registrar attached to Noakhali, is allowed leave for three months, viz., earned leave on average pay for three days, under rule 9 of the Bengal Services (Revision of Leave) Rules, with effect from the 19th May 1936, and leave on medical certificate, under rule 16 of the same Rules, for the remaining period.

Bakarganj.—No. 401.—6th July 1936.—Maulvi Abul Muzaffar Ashraf Ali, Joint Sub-Registrar of Patuakhali at Betagi, in the district of Bakarganj, is allowed leave on average pay for one month, under rule 81(*b*)(*ii*) of the Fundamental Rules, in extension of the leave granted to him in this department notification No. 277, dated the 12th May 1936.

Calcutta-Khulna.—No. 402.—6th July 1936.— Babu Saurindra Nath Sen, Sub-Registrar attached to Calcutta, lately officiating as Sub-Registrar of Kalaroa, in the district of Khulna, on leave, is appointed to act, until further orders, as Sub-Registrar of Paikgacha in the same district.

Mymensingh.—No. 406. — 9th July 1936.— Maulvi Mazharul Huq (No. III), 1st Joint Sub-Registrar of Kalihati at Ghatail, in the district of Mymensingh, is allowed leave on average pay for three months, under rule 81 (*b*) (*ii*) of the Fundamental Rules, in extension of the leave granted to him in this department notification No. 252, dated the 30th April 1936.

Chittagong.—No. 407.—9th July 1936.—This department notification No. 94, date the 10th February 1936, appointing Babu Bhupati Ranjan Sen, 1st Joint Sub-Registrar of Fatikchari at Kalimunshi's Hat (Nanupur) since transferred to Hathazari in the same district to be 1st Joint Sub-Registry office of Patiya at Boalkhali also in the same district, is cancelled.

Noakhali.—No. 408.—9th July 1936.—Maulvi Abdus Salam, probationary Sub-Registrar attached to Noakhali officiating as Joint Sub-Registrar of Hatiya at Ramgati in the same district, is allowed leave for twenty days, viz., earned leave for seven days under rule 9 of the Bengal Services (Revision of Leave) Rules, 1934, with effect from the 27th June 1936, and leave on private affairs for the remaining period, under rule 15 of the same Rules.

Tippera-Noakhali.—No. 409.—9th July 1936.— Babu Manindra Kishore Talapatra, Sub-Registrar attached to Comilla, in the district of Tippera, is appointed to act, until further orders, as Joint Sub-Registrar of Hatiya at Ramgati, in the district of Noakhali.

This cancels this department notification No. 349, dated the 17th June 1936, appointing Babu Kshirode Mohan Bhowmik, Sub-Registrar attached to Noakhali, to act as Joint Sub-Registrar of Hatiya at Ramgati in the same district.

S. CHATTERJEA,

Inspector-General of Registration, Bengal.

FINANCE DEPARTMENT.

Audit.

NOTIFICATION.

No. 5778F.—6th July 1936.—In exercise of the powers conferred by rules 41, 42 and 44 of the Civil Services (Classification, Control and Appeal) Rules, the Governor in Council and acting with his Ministers is pleased to make the following amendments to Schedule I of the Bengal Services (Revision of Pay) Rules, 1934, namely :—

I. *Medical Department.*

Above the entries "Bengal Medical Service—(*i*) Civil Surgeons—450—75/2—750", etc., the following shall be inserted :—

Professor of Clinical Medicine, Medical College	Officers of the Bengal Medical Service—550—75/2—1,000. Direct recruits—650—50/2—750—75/2—1,200, their initial pay in the scale being fixed as follows according to their age on the date of assuming duties :—
Professor of Clinical and Operative Surgery, Medical College	
2nd Professor of Midwifery, Medical College ..	
Professor of Ophthalmic Surgery, Medical College ..	
Professor of Physiology, Medical College	
Professor of Pathology and Bacteriologist to Government, Medical College ; and	
Professor of Anatomy, Medical College ..	

Age.	Stage of time-scale.
36 and below	1
37	2
38	3
39	4
40	5
41	6
42	7
43	8
44	9
45	10
46	11
47	12
48	13
49	14
50	15
51	16
52 and above	17

Note.—Increments will accrue on the anniversary of appointment.

Professor of Biology, Medical College	300—50/2—700.
Professor of Physics, Medical College	

2. *Finance Department.*

The following entry under "Agency Establishment", as inserted by this department notification No. 3275F., dated the 8th May 1934, shall be deleted :—

Salt Darogas in charge of inland bonded salt warehouses ..	50

And the said rules shall have effect and shall be deemed always to have had effect as if they had been made as so amended.

ADDENDA AND CORRIGENDA.

No. 5806F.—11th July 1936.—The following corrections which have been authorised are published for general information :—

The Bengal Financial Rules, 1st Edition (Reprint), 1930.

Page 133—S. R. 38A under T. O. 16 as inserted by correction slip No. 294, dated the 4th December 1935.—Insert the following as a note below this rule :—

" *Note.*—The instructions in this rule apply *mutatis mutandis* to Indian Postal Orders issued for remittance of money on Government account."

Page 174—F. R. Appendix 3.—Insert the following as rule 2-A with the heading *Conveyance Hire* :—

" 2-A. *Conveyance Hire.*—When a non-gazetted or inferior Government servant is despatched on duty to a place at some distance from his office or is summoned to his office by a special order of a gazetted officer outside the ordinary hours of duty, the expenditure involved may be paid by Government and charged to contingencies, provided—

(*a*) That the head of the office certifies that the expenditure was actually incurred, was unavoidable and is within the scheduled scale of charges for the conveyance used.

(*b*) That the Government servant concerned is not entitled to draw travelling allowance under the ordinary rules for the journey, and that he is not granted any compensatory leave and does not and will not otherwise receive any special remuneration for the performance of the duty which necessitated the journey."

Page 38—Rule 84.—Insert the following as a second sub-paragraph of note 2 under the " Exceptions " to this rule :—

" In the case of all other inferior servants a certificate in the following form should be furnished by the disbursing officer :—

Certified that all inferior servants whose pay has been charged in this bill were actually entertained in Government service during the period concerned."

Pages 128-130—S. R. 34 under T. O. 16.—(*i*) In line 2 of existing clause 4, *for* the words " Imperial Bank of India," *substitute* the word " Bank."

(*ii*) *Substitute* the following for the second sentence of existing clause 5 :—

" Between places where there is an office or branch or an agency of the Reserve Bank of India [see T. O. 2(*a*)] demand drafts are issued in lieu of cash orders."

(*iii*) *Insert* the following as clause 4, renumbering the existing clauses 4, 5, 6, 7, 8 and 9 as 5, 6, 7, 8, 9 and 10, respectively :—

" 4. All cheques, bills and vouchers preferable at a Government treasury for payment being non-negotiable instruments can be endorsed only once in favour of the specific person to whom the money is to be paid. If this endorsement is made on a contingent bill in favour of a private individual/firm of suppliers the bill can be re-endorsed in favour of his/its banker to enable the latter to collect and credit the amount into his/its banking account."

(*iv*) *Insert* the following as a note under clause 5 as now re-numbered :—

" *Note.*—All vouchers and bills passed by Treasury Officers and the local Account Offices for payment at a branch of the Imperial Bank as well as Interest Payment Orders, etc., being non-negotiable instruments, warrant special precaution on the part of the Bank in the matter of identification of payees. No endorsements being permissible, all such vouchers have normally to be presented by the payee personally at the Bank. To facilitate business the Bank has undertaken as a special case to disburse payments of such claims when presented through messengers who can be identified provided the Bank is previously in possession of specimen of payee's signature as recorded thereon."

Pages 163-164—F. R. Appendix 1 as substituted by correction slip No. 193, dated the 12th May 1933.—The words " their executors and administrators or representative and " occurring in clause 1 of the Bond should be printed in italics.

Miscellaneous.

NOTIFICATIONS.

No. 4855Mis.—13th July 1936.—In exercise of the power conferred by sub-section (*1*) of section 11 of the Bengal Amusements Tax Act, 1922 (Bengal Act V of 1922), the Governor in Council is pleased to authorize Babu Hirendra Chandra Sen, Probate Deputy Collector, Calcutta, to enter any place of entertainment while the entertainment is proceeding, and any place ordinarily used as a place of entertainment at any reasonable times, within the areas mentioned in clauses (*a*) and (*b*) of sub-section (*3*) of section 1 of the said Act and within the Municipalities of Garden Reach and Tollygunge, the Barrackpore Cantonment and the South Suburban Municipality, with a view to seeing whether the provisions of Chapter I of the said Act or any rules made thereunder are being complied with.

No. 4856Mis.—13th July 1936.—In exercise of the power conferred by rule 12 of the rules made under sub-section (*1*) of section 12 of the Bengal Amusements Tax Act, 1922 (Bengal Act V of 1922), published under notification No. 2928Misc., dated the 16th September 1922, the Governor in Council is pleased to appoint Babu Hirendra Chandra Sen, Probate Deputy Collector, Calcutta, to perform all the functions of the officer referred to in sub-rules (*1*) and (*2*) of that rule within the areas mentioned in clauses (*a*) and (*b*) of sub-section (*3*) of section 1 of the said Act and within the Municipalities of Garden Reach and Tollygunge, the Barrackpore Cantonment and the South Suburban Municipality.

E. N. BLANDY,
Secy. to the Govt. of Bengal.

COMMERCE DEPARTMENT.

NOTIFICATIONS.

No. 4543Com. — 8th July 1936.—In exercise of the power conferred by section 51 of the Indian Electricity Act, 1910 (IX of 1910), the Governor in Council is pleased to confer on the Calcutta Electric Supply Corporation, Ltd., the licensees of the Calcutta Electric License, 1907, for the purpose of laying an underground service cable in the private common passage leading to premises Nos. 77-1, 77-1$_1$-1, 77-3, 78, 78-1, 78-2, 78-3, etc., Clive Street and Nos. 40-4 and 40-5, Strand Road, Calcutta, situated within the area of supply of the said Corporation and for repairing the same whenever necessity arises, the powers which the telegraph authority possesses under sections 10 to 19 of the Indian Telegraph Act, 1885 (XIII of 1885), with respect to the placing of telegraph lines and posts for the purposes of a telegraph established or maintained by Government or to be so established or maintained. The exercise of the powers hereby conferred is subject to the provisions of the said Indian Telegraph Act, 1885.

No. 4598Com.—10th July 1936.—In accordance with the provisions of regulation 2 of the regulations published under this Government notification No. 12230Com., dated the 24th December 1935, as amended by notification No. 3600Com., dated the 21st May 1936, the Governor in Council is pleased to appoint Mr. P. Bose of the Satal Engineering Works, a member of the licensing board as a representative of electrical contractors in Bengal.

E. N. BLANDY,
Secy. to the Govt. Bengal.

Orders by the Registrar of Joint Stock Companies, Bengal.

Calcutta, the 7th July 1936.

In the matter of the Provident Insurance Societies Act, 1912 (V of 1912), and in the matter of Leading Insurance Company.

Whereas I am of opinion as the result of an inquiry held by Mr. H. L. Humphreys, A.I.A., an Inspector appointed by me under sub-section (*1*) of section 17 of the Provident Insurance Societies Act, 1912 (V of 1912), that the Leading Insurance Company having its registered office at 159-A, Bowbazar Street, Calcutta, is insolvent or must necessarily become so, and that the business of the said society is not conducted in accordance with its rules and that the registration of the said society ought to be cancelled :

Now, therefore, in exercise of the powers conferred by section 18 of the said Provident Insurance Societies Act, I hereby cancel the registration of the said Leading Insurance Company.

And further, in exercise of the powers conferred by sub-section (*1*) of section 19 of the said Provident Insurance Societies Act, I hereby appoint Mr. Chandra Kanta Paul, G.D.A., of 46B, Amherst Street, Calcutta, to be the liquidator to wind up the said Leading Insurance Company at a remuneration of 5 per cent. of the realisations of the dues to the society subject to the minimum of Rs. 100 to be paid out of the assets of the society or to be paid by such persons and in such proportions as the liquidator may determine.

N. K. MAJUMDER,
Registrar of Provident Insurance Societies, Bengal.

Calcutta, the 8th July 1936.

In the matter of the Indian Companies Act, 1913 (VII of 1913), and in the matter of Thomas Robinson & Son (India), Ltd.

Notice is hereby given that, on the expiration of three months from date, the name of Thomas Robinson & Son (India), Ltd., will, unless cause is shown to the contrary, be struck off the register, and the company will be dissolved.

In the matter of the Indian Companies Act, 1913 (VII of 1913), and in the matter of Moti Insurance Co., Ltd.

Notice is hereby given that, on the expiration of three months from date, the name of Moti Insurance Co., Ltd., will, unless cause is shown to the contrary, be struck off the register, and the company will be dissolved.

In the matter of the Indian Companies Act, 1913 (VII of 1913), and in the matter of Oswal Brothers, Ltd.

Notice is hereby given that, on the expiration of three months from date, the name of Oswal Brothers, Ltd., will, unless cause is shown to the contrary, be struck off the register, and the company will be dissolved.

In the matter of the Indian Companies Act, 1913 (VII of 1913), and in the matter of South Faridpur Industrial Bank, Ltd.

Notice is hereby given that, on the expiration of three months from date, the name of South Faridpur Industrial Bank, Ltd., will, unless cause is shown to the contrary, be struck off the register, and the company will be dissolved.

N. K. MAJUMDER,
Registrar of Companies, under Act VII of 1913.

Calcutta, the 9th July 1936.

In the matter of the Indian Companies Act, 1913 (VII of 1913), and in the matter of Karmar Kshatriya Co., Ltd.

Notice is hereby given that the name of Karmar Kshatriya Co., Ltd., has, this day in pursuance of section 247 of the Act, been struck off the register and that the company is dissolved.

In the matter of the Indian Companies Act, 1913 (VII of 1913), and in the matter of Bharat Loan Co., Ltd.

Notice is hereby given that the name of Bharat Loan Co., Ltd., has, this day in pursuance of section 247 of the Act, been struck off the register and that the company is dissolved.

N. K. MAJUMDER,

Registrar of Joint Stock Companies.

IRRIGATION DEPARTMENT.

Establishment.

NOTIFICATIONS.

No. 4C.I.E.—6th July 1936.—Babu Angsujit Mukherji, Assistant Engineer, is granted, under rule 81(*b*) (*ii*) of the Fundamental Rules, leave on average pay for two weeks, with effect from the 7th July 1936.

No. 5C.I.E.—7th July 1936.—Maulvi Ziaul Islam, Assistant Engineer, on return from leave, is posted to the Dredger Subdivision of the Dredger Division.

No. 6C.I.E.—7th July 1936.—Babu Bijoy Kumar Basu, Assistant Engineer, is transferred in the interests of the public service from the Dredger Division to the Bankura Division.

No. 7C.I.E.—7th July 1936.—Babu Prasad Das Sen Gupta, Assistant Engineer, is transferred in the interests of the public service from the Canals Division to the Khulna Division.

No. 8C.I.E.—7th July 1936.—Babu Joy Kumar Sarkar, Assistant Engineer, is transferred in the interests of the public service from the Bankura Division to the Canals Division.

T. A. CURRY, *Chief Engineer, Bengal.*

DEPARTMENT OF AGRICULTURE AND INDUSTRIES.

Industries.

NOTIFICATIONS.

Minister-in-charge: The Hon'ble Nawab Sir Mohiuddin Faroqui, Kt., of Ratanpur.

No. 4312Ind.—7th July 1936.—In exercise of the power conferred by section 20 of the Bengal State Aid to Industries Act, 1931 (Bengal Act III of 1931), the Government of Bengal (Ministry of Industries) are pleased to delegate to the Board of Industries the power to grant State aid, in the form specified in clause (*a*) of sub-section (*1*) of section 19 of the Act to an industry, of an amount or value not exceeding five thousand rupees, subject to the following conditions :—

(1) That the terms and conditions laid down in the Act and the rules thereunder are strictly followed, any case involving relaxation of any rule being referred to Government.

(2) That the Board is unanimous in its decision to grant aid.

(3) That funds are available for the purpose.

(4) That a quarterly report showing the action taken on the applications dealt with by the Board under the power hereby delegated is submitted to Government within a month after the close of the quarter.

No. 4313Ind.—7th July 1936.—In exercise of the power conferred by section 32 of the Bengal State Aid to Industries Act, 1931 (Bengal Act III of 1931), the Government of Bengal (Ministry of Industries) are pleased to make the following further amendments in the rules published with notification No. 305T.A.I., dated the 8th June 1933, as amended by notification No. 220T.A.I., dated the 26th May 1934, namely :—

Amendments.

(*i*) *Omit* the word "or" *after* the word "application" in the proviso to clause (*a*) of sub-rule (*2*) of rule 1 of these rules.

(*ii*) *Add* the following as the second proviso to clause (*a*) of sub-rule (*2*) of rule 1 of these rules :—

"Provided also that the Board shall not be bound to invite such objections in the case of loans up to a limit of Rs. 1,000 (one thousand rupees only), or"

(*iii*) *Insert* the words "or the Board as the case may be" *after* the word "Government" wherever it occurs in sub-rules (*1*) and (*3*) of rule 2, sub-rule (*i*) of rule 3 and sub-rule (*2*) of rule 5 of these rules.

Agriculture.

NOTIFICATIONS.

Minister-in-charge: The Hon'ble Nawab Sir Mohiuddin Faroqui, Kt., of Ratanpur.

No. 4376Agri.—9th July 1936.—In exercise of the power conferred by sub-section (*3*) of section 1 of the Bengal Water Hyacinth Act, 1936 (Bengal Act XIII of 1936), the Government of Bengal (Ministry of Agriculture) are pleased to appoint the 1st August 1936 as the date on which the said Act shall come into force.

No. 4398Agri.—10th July 1936.—Mr. P. K. Biswas, District Agricultural Officer, is appointed to act as Inspector of Agricultural Schools in the Bengal Lower Agricultural Service, with effect from 6th July 1936, *vice* Rai Sahib Tara Nath Roy, or until further orders.

H. S. E. STEVENS,
Secy. to the Govt. of Bengal.

Forests.

Orders by the Conservator of Forests, Bengal.

Chittagong Hill Tracts.—No. 8001For.—7th July 1936.—Maulvi Rafiq Ahmad, Extra Assistant Conservator of Forests, in charge of the Mainimukh subdivision, is posted to the charge of the Kassalong Range, with effect from the 1st September 1936, in addition to his own duties, with headquarters at Mainimukh.

W. MEIKLEJOHN,
Conservator of Forests, Bengal.

REVENUE DEPARTMENT.

Land Revenue.

NOTIFICATIONS.

Midnapore.—No. 7017½L.R. - 4th May 1936. Whereas it appears to the Board of Revenue that the admission of the proprietors of estate Kalyanpur bearing tauzi No. 2730 on the revenue roll of the district of Midnapore to the management of the estate would endanger the public tranquillity and be seriously detrimental to public welfare; and whereas the aforesaid circumstance has been reported by the Board of Revenue to the Governor in Council;

Now, therefore, in exercise of the power conferred by the last proviso to section 3 of the Bengal Land Revenue Settlement Regulation, 1822 (Bengal Regulation VII of 1822), read with clause *First* of section 2 of the Bengal Land Revenue Settlement Regulation, 1825 (Bengal Regulation IX of 1825), the Governor in Council is pleased to direct that the said estate shall be held *khas* for a period of twelve years.

Jalpaiguri-Howrah-24-Parganas - Khulna - Midnapore-Bankura-Bogra. — No. 9909L.R. — 10th July 1936.—Khan Bahadur Saiyid Muazzamuddin Husain, Deputy Magistrate and Deputy Collector, Jalpaiguri, is appointed to be the Settlement Officer in the District of Howrah and Land Revenue Settlement Officer, Western Circle, in the districts of 24-Parganas, Khulna, Midnapore, Bankura and Bogra, with effect from the date on which he joins his settlement duties in those districts.

Howrah - 24-Parganas - Khulna - Midnapore - Bankura-Bogra.—No. 9910L R.—10th July 1936. —Under the provisions of section 3 (*14*) of the Bengal Tenancy Act, 1885 (Act VIII of 1885), Khan Bahadur Saiyid Muazzamuddin Husain, Settlement Officer, Howrah, 24-Parganas, Khulna, Midnapore, Bankura and Bogra, is authorised to discharge in those districts the functions of a Revenue Officer, under Chapter X of that Act, so far as they relate to surveys and the preparation of record-of-rights.

He is also vested with the powers of a Settlement Officer, under Chapter VII, Part I, of the rules under the Bengal Tenancy Act, in respect of the aforesaid areas.

Howrah - 24-Parganas - Khulna - Midnapore - Bankura-Bogra. — No. 9911L.R. — 10th July 1936.—Under the provisions of section 3(2) of the Bengal Tenancy Act, 1885 (Act VIII of 1885), Khan Bahadur Saiyid Muazzamuddin Husain, Settlement Officer, Howrah, 24-Parganas, Khulna, Midnapore, Bankura and Bogra, is appointed to discharge the functions of a Collector, under section 58 of that Act, in those districts.

Howrah - 24-Parganas - Khulna - Midnapore - Bankura-Bogra. — No. 9912L.R. — 10th July 1936.—Khan Bahadur Saiyid Muazzamuddin Husain, Settlement Officer, Howrah, 24-Parganas, Khulna, Midnapore, Bankura and Bogra, is vested with the powers of a Revenue Officer, under section 108 of the Bengal Tenancy Act, 1885 (Act VIII of 1885), in those districts, for the purpose of a revision of orders passed either by himself or by any other Revenue Officer under him, under sections 105, 105-A, 106 or 107 of the said Act.

Howrah - 24-Parganas - Khulna - Midnapore-Bankura - Bogra. — No. 9913L.R. 10th July 1936 In exercise of the powers conferred by section 115-B of the Bengal Tenancy Act, 1885 (Act VIII of 1885), the Governor in Council is pleased to empower Khan Bahadur Saiyid Muazzamuddin Husain, Settlement Officer, Howrah, 24-Parganas, Khulna, Midnapore, Bankura and Bogra, to make corrections in the record-of-rights prepared in respect of lands in those districts, in accordance with, and subject to, the provisions of the said section.

Howrah - 24-Parganas - Khulna - Midnapore-Bankura - Bogra. — No. 9914L.R. — 10th July 1936. Khan Bahadur Saiyid Muazzamuddin Husain, Settlement Officer, Howrah, 24-Parganas, Khulna, Midnapore, Bankura and Bogra, is vested with the powers of a Collector under—

(1) the Bengal Land Revenue Settlement Regulation, 1822 (VII of 1822),

(2) the Bengal Land Revenue Settlement Regulation, 1825 (IX of 1825),

(3) the Bengal Land Revenue Assessment (Resumed Lands) Regulations, 1828 (III of 1828), and

(4) the Bengal Land Revenue (Settlement and Deputy Collectors) Regulation, 1833 (IX of 1833),

to be exercised in those districts.

Howrah - 24-Parganas - Khulna - Midnapore-Bankura-Bogra. — No. 9915L.R. — 10th July 1936.—In exercise of the powers conferred by section 35 of the Bengal Land Revenue Settlement Regulation, 1822 (Bengal Regulation VII of 1822), the Governor in Council is pleased to order that Khan Bahadur Saiyid Muazzamuddin Husain, Settlement Officer, Howrah, 24-Parganas, Khulna, Midnapore, Bankura and Bogra, shall exercise in those districts, the authority of a Collector under Bengal Land Revenue Assessment (Resumed Lands) Regulation, 1819 (Bengal Regulation II of 1819).

Faridpur.—No. 9964L.R.—10th July 1936.—Under the provisions of section 3 (*14*) of the Bengal Tenancy Act, 1885 (Act VIII of 1885), Khan Sahib Maulvi Md. Karim Bakash, Settlement Kanungo, is authorised to discharge in the district of Faridpur, the functions of a Revenue Officer, under Chapter X of that Act, so far as they relate to surveys and the preparation of record-of-rights.

Faridpur.—No. 9965L.R.—10th July 1936.—In exercise of the powers conferred by section 3 of the Bengal Land Revenue Settlement Regulation, 1825 (IX of 1825), read with section 20 of the Bengal Land Revenue Settlement Regulation, 1822 (VII of 1822), the Governor in Council is pleased to vest Khan Sahib Maulvi Md. Karim Bakash, Settlement Kanungo, who has, by notification No. 9016C.P., dated the 26th June 1936, been vested by the Board of Revenue with the powers of a Collector in the estates of Raja Janaki Nath Roy and Lala Brajendra Kumar Bose in the district of Faridpur, for the purpose of the work of maintenance of the record-of-rights of these estates, with powers under section 19 of the said Bengal Land Revenue Settlement Regulation, 1822, within the local limits of those estates, to require and compel persons mentioned in the section to attend and produce accounts and other papers and to examine such persons under that section for the purpose of the said work of the maintenance of the record-of-rights.

Birbhum.—No. 10021L.R.—13th July 1936.—In exercise of the powers conferred by section 3 of the Bengal Land Revenue Settlement Regulation, 1825 (IX of 1825), read with section 20 of the Bengal Land Revenue Settlement Regulation, 1822 (VII of 1822), the Governor in Council is pleased to vest Babu Ram Ratan Ghosh, Settlement Kanungo, who has, by notification No. 9142 C. P., dated the 2nd July 1936, been vested by the Board of Revenue with the powers of a Collector in the estate of Raja Bhupendra Narayan Sinha Bahadur of Nashipur, in the district of Birbhum, for the purpose of the work of maintenance of the record-of-rights of that estate, with powers under section 19 of the said Bengal Land Revenue Settlement Regulation, 1822, within the local limits of that estate, to require and compel persons mentioned in the section to attend and produce accounts and other papers and to examine such persons under that section for the purpose of the said work of maintenance of the record-of-rights.

Land Acquisition.

NOTIFICATIONS.

Noakhali.—No. 9728L.A.—7th July 1936.—Whereas it appears to the Governor in Council that land is likely to be required to be taken by Government at the public expense for a public purpose, viz., for the extension of the playing field of the Begamganj High English School in the village of Choumuhani, jurisdiction list No. 238, thana Begamganj, pargana Amrabad, zilla Noakhali, it is hereby notified that for the above purpose a piece of land measuring, more or less, 1·06 acres comprising cadastral survey plots Nos. 10 and 11, is likely to be required within the aforesaid village of Choumuhani.

This notification is made, under the provisions of section 4 of Act I of 1894, to all whom it may concern.

A plan of the land may be inspected in the office of the Collector of Noakhali.

In exercise of the powers conferred by the aforesaid section, the Governor in Council is pleased to authorise the officers for the time being engaged in the undertaking with their servants and workmen, to enter upon and survey the land and do all other acts required or permitted by that section.

In exercise of the powers conferred by section 17 (*4*) of the Land Acquisition Act I of 1894, as amended by Act XXXVIII of 1923, the Governor in Council is pleased to direct that the provisions of section 5A of the Act shall not apply in this case.

Pabna. — No. 9734L.A. — 7th July 1936. — The Governor in Council is pleased to cancel notification No. 1791L.A., dated the 7th February 1936, under section 4 of the Land Acquisition Act, I of 1894, published at page 389, Part I of the *Calcutta Gazette* of the 13th idem, in respect of the proposed acquisition of 2 acres of land required by the district board of Pabna for the construction of a road from Sthal to Enayatpur in the villages of Sontosha, Kochgram and Dhulialari, thana Chauhali, pargana Esupshahi, district Pabna.

Hooghly.—No. 9737L.A.—7th July 1936.—Whereas it appears to the Governor in Council that land is likely to be required to be taken by Government at the expense of the Bhadreswar Municipality for a public purpose, viz., for widening the Daksinabati lane in the village of Telinipara, jurisdiction list No. 10, thana Bhadreswar, pargana Boro, district Hooghly, it is hereby notified that for the above purpose a piece of land comprising portions of cadastral plots Nos. 145, 146, 176, 177, 277, 282, 283, 313, 314, 315, 316 and 317, and measuring, more or less, 0·086 of an acre, is likely to be required within the aforesaid village of Telinipara.

This notification is made, under the provisions of section 4 of Act I of 1894, to all whom it may concern.

A plan of the land may be inspected in the office of the Land Acquisition Officer, Serampore.

In exercise of the powers conferred by the aforesaid section, the Governor in Council is pleased to authorise the officers for the time being engaged in the undertaking, with their servants and workmen, to enter upon and survey the land and do all other acts required or permitted by that section.

Any person interested in the above land, who has any objection to the acquisition thereof, may, within thirty days after the date on which public notice of the substance of this notification is given in the locality, file an objection in writing before the Collector of Hooghly.

24-Parganas.—No. 9740L.A.—7th July 1936.—Whereas it appears to the Governor in Council that land is likely to be required to be taken by Government at the expense of the Madrail Narayanpur union board for a public purpose, viz., for the construction of a girls' school at Madrail in the village of Madrail, jurisdiction list No. 2, thana Jagaddal, pargana Havelisahar, district 24-Parganas, it is hereby notified that for the above purpose a piece of land comprising cadastral plot No. 1274, and measuring, more or less, 0·2221 of an acre, is likely to be required within the aforesaid village of Madrail.

This notification is made, under the provisions of section 4 of Act I of 1894, to all whom it may concern.

A plan of the land may be inspected in the office of the Land Acquisition Deputy Collector, 24-Parganas.

In exercise of the powers conferred by the aforesaid section, the Governor in Council is pleased to authorise the officers for the time being engaged in the undertaking, with their servants and workmen, to enter upon and survey the land and do all other acts required or permitted by that section.

Any person interested in the above land, who has any objection to the acquisition thereof, may, within thirty days after the date on which public notice of the substance of this notification is given in the locality, file an objection in writing before the Collector of 24-Parganas.

Murshidabad.—No. 9743L.A.—7th July 1936.—Whereas it appears to the Governor in Council that land is likely to be required to be taken by Government at the expense of the district board of Murshidabad for a public purpose, viz., for excavation of Talha tank, in the village of Chupur, jurisdiction list No. 21, thana Nabagram, pargana Sherpur, district Murshidabad, it is hereby notified that for the above purpose a piece of land comprising parts of cadastral plots Nos. 547, 548, 549, 550, 654, 765, 766, 776, 786 and 794, and measuring, more or less, 2·15 acres, is likely to be required within the aforesaid village of Chupur.

This notification is made, under the provisions of section 4 of Act I of 1894, to all whom it may concern.

A plan of the land may be inspected in the office of the Subdivisional Officer, Lalbagh.

In exercise of the powers conferred by the aforesaid section, the Governor in Council is pleased to authorise the officers for the time being engaged in the undertaking, with their servants and workmen, to enter upon and survey the land and do all other acts required or permitted by that section.

Any person interested in the above land, who has any objection to the acquisition thereof, may, within thirty days after the date on which public notice of the substance of this notification is given in the locality, file an objection in writing before the Collector of Murshidabad.

24-Parganas.—No. 9749L.A.—7th July 1936.—Whereas it appears to the Governor in Council that land is likely to be required to be taken by Government at the expense of the district board, 24-Parganas, for a public purpose, viz., for the extension of the hospital compound in front of Dr. B. N. Bose's Hospital, in the village of Chanak, jurisdiction list No. 4, thana Titagar, pargana Calcutta, district 24-Parganas, it is hereby notified that for the above purpose a piece of land comprising cadastral plots Nos. 2475, 2477, 2480, 2474, 2473 and 2478, and measuring, more or less, 0·59 of an acre, is likely to be required within the aforesaid village of Chanak.

This notification is made, under the provisions of section 4 of Act I of 1894, to all whom it may concern.

A plan of the land may be inspected in the office of the Chairman, district board, 24-Parganas, as well as in that of the Land Acquisition Deputy Collector, 24-Parganas.

In exercise of the powers conferred by the aforesaid section, the Governor in Council is pleased to authorise the officers for the time being engaged in the undertaking, with their servants and workmen, to enter upon and survey the land and do all other acts required or permitted by that section.

Any person interested in the above land, who has any objection to the acquisition thereof, may, within thirty days after the date on which public notice of the substance of this notification is given in the locality, file an objection in writing before the Collector of 24-Parganas.

Hooghly.—No. 9752L.A.—7th July 1936.—The Governor in Council is pleased to cancel the notification No. 9503L.A., dated the 15th July 1935, under section 4 of the Land Acquisition Act, I of 1894, published at page 1374, Part I of the *Calcutta Gazette* of the 18th idem, in respect of the proposed acquisition of 7·78 acres of land required by the Kotrung Municipality for a park and a play ground in the village of Bhadrakali, jurisdiction list No. 9, thana Uttarpara, pargana Boro, district Hooghly.

Chittagong.—No. 9943L.A.—10th July 1936.—Whereas it appears to the Governor in Council that land is likely to be required to be taken by Government at the public expense for a public purpose, viz., for manufacture of bricks for improvement of the Chittagong-Arracan road in the village of Amirabad and Shukhcharry, police-station Satkania, zilla Chittagong, it is hereby notified that for the above purpose pieces of land comprising the revisional survey plot Nos. 582(ka), 583 (ka), 8519, 8520, 8521, 8522 (part), 8523 (part), 8527 (part), 8540 (part), 8545, 8547 (part), 8549, 8550, 8553, 8554, 8555, 8556, 8557, 8558, 5859, 8560 (part), 8588, 8589, 8590 and 8591 of village Amirabad and revisional survey plot Nos. 488 (ka), 13, 15 (part), 16 (part), 40, 41, 42, 43, 44, 45, 46, 107 (part), 108 (part), 6307 (part), 6308 (part), 6309 (part), 6314, 6315, 6316 (part), 6317 (part), 6318 (part), 6342 (part), 6343, 6344, 6345, 6346, 6347, 6348, 6349, 6350 and 6351 of village Shukhcharry, and measuring, more or less, 11·39 acres, are likely to be requred within the aforesaid villages of Amirabad and Shukhcharry.

This notification is made, under the provisions of section 4 of Act I of 1894, to all whom it may concern.

A plan of the land may be inspected in the office of the Collector of Chittagong.

In exercise of the powers conferred by the aforesaid section, the Governor in Council is pleased to authorise the officers for the time being engaged in the undertaking, with the servants and workmen, to enter upon and the survey the land and do all other acts required or permitted by that section.

Any person interested in the above land, who has any objection to the acquisition thereof, may, within thirty days after the date on which public notice of the substance of this notification is given in the locality, file an objection in writing before the Collector of Chittagong.

Tippera.—No. 9946L.A.—10th July 1936.—Whereas it appears to the Governor in Council that land is likely to be required to be taken by Government at the expense of the district board of Tippera for a public purpose, viz., for raising the approaches of the Ichali Bridge and for filling up the second khal and its diversion near Bagrabazar in the villages of Baghadi, Sobhanpur and Sapdi, jurisdiction list Nos. 111, 110 and 109, respectively, thana Chandpur, parganas Kardi Mahabatpur, Kardi Mahabatpur and Farakkabad Singhergaon, district Tippera, it is hereby notified that for the above purpose a piece of land comprising parts of cadastral survey plot No. 1451 in Baghali, parts of cadastral survey plot Nos. 312, 310 and 313 in Sobhanpur and parts of cadastral survey plot Nos. 62, 857, 860, 861 and 876 in Sapdi, and measuring, more or less 0·88 of an acre, is likely to be required within the aforesaid villages of Baghadi, Sobhanpur and Sapdi.

This notification is made, under the provisions of section 4 of Act I of 1894, to all whom it may concern.

A plan of the land may be inspected in the office of the Subdivisional Officer of Chandpur.

In exercise of the powers conferred by the aforesaid section, the Governor in Council is pleased to authorise the officers for the time being engaged in the undertaking, with their servants and workmen, to enter upon and survey the land and do all other acts required or permitted by that section.

Any person interested in the above land, who has any objection to the acquisition thereof, may, within thirty days after the date on which public notice of the substance of this notification is given in the locality, file an objection in writing before the Collector of Tippera.

Burdwan.—No. 9970L.A.—10th July 1936.—Whereas it appears to the Governor in Council that land is likely to be required to be taken by Government at the public expense for a public purpose, viz., for a road approach of head sluice at mile 19, chainage 43 and 80 feet of distributary No. 11, Branch Canal, Damodar Canal Project, in the village of Eruar, jurisdiction list No. 38, thana Bhatar, pargana Mazafarsahi, district Burdwan, it is hereby notified that for the above purpose three pieces of land comprising parts of cadastral survey plot Nos. 29, 70, 71, 73, 74 and 78, and altogether measuring, more or less, 0·19 of an acre, are likely to be required within the aforesaid village of Eruar.

This notification is made, under the provisions of section 4 of Act I of 1894, to all whom it may concern.

A plan of the land may be inspected in the office of the Special Land Acquisitin Officer, Burdwan, as well as in that of the Executive Engineer, Damodar Canal Division, Burdwan.

In exercise of the powers conferred by the aforesaid section, the Governor in Council is pleased to authorise the officers for the time being engaged in the undertaking, with their servants and workmen, enter upon and survey the land and do all other acts required or permitted by that section.

In exercise of the powers conferred by section 17 (*4*) of the Land Acquisition Act, 1 of 1894, as amended by Act XXXVIII of 1923, the Governor in Council is pleased to direct that the provisions of section 5A of the Act shall not apply in this case.

Calcutta.—No. 9973L.A.—10th July 1936.—The Governor in Council is pleased to cancel so much of the notification No. 11430L.A., dated the 11th September 1931, under section 4 of the Land Acquisition Act, published at page 1114, Pt. I of the *Calcutta Gazette* of the 17th idem, as relates to that portion of the land measuring, more or less, 1 cottah 6 chittaks and 5 square feet of standard measurement, equivalent to 0·0228 of an acre, and bounded as described below out of the total area of 3 cottahs 9 chittaks and 15 square feet, equivalent to 0·0592 of an acre, required by the Corporation of Calcutta for widening a portion of Annada Banerjee Lane in Ward No. XXII of the Calcutta Municipality in the city of Calcutta—

Plot No. I.

Portion of premises No. 17 Ashutosh Mukherjee Road now forming a portion of premises No 2/1, Dr. Rajendra Road.

North - By Dr. Rajendra Road.

East—By Annada Banerjee Lane.

South—By premises No 19, Ashutosh Mukherjee Road.

West - By the remaining portion of premises No. 2/1, Dr. Rajendra Road.

Plot No II.

Portion of premises No 4, Dr. Rajendra Road.

North—By Dr. Rajendra Road.

East - By the remaining portion of premises No. 4, Dr. Rajendra Road.

South—By premises No. 25, Annada Banerjee Lane.

West—By Annada Banerjee Lane.

Burdwan.—No. 10014L.A. 11th July 1936.—Whereas it appears to the Governor in Council that land is likely to be required to be taken by Government at the public expense for a public purpose, viz., for a road approach at mile 2, chainage 24 and 93 feet of distributary No. 11, Branch Canal, Damodar Canal Project, in the villages of Chandipur and Kapsor, jurisdiction list Nos. 41 and 40, respectively, thana Bhatar, pargana Mazafarsahi, district Burdwan, it is hereby notified that for the above purpose two pieces of land comprising parts of cadastral survey plots Nos. 2014, 2015, 2029-2031, 2039, 2059, 2061, 2062, 2129, 2130, 2132-2134, 2137, 2139-2142, 2162, 2170-2172, 2174-2179, 2187 and 2209 in mauza Chandipur and parts of cadastral survey plot No. 2212 in mauza Kapsor, and together measuring, more or less, 2·57 acres, are likely to be required within the aforesaid villages of Chandipur and Kapsor.

This notification is made, under the provisions of section 4 of Act I of 1894, to all whom it may concern.

A plan of the land may be inspected in the office of the Special Land Acquisition Officer, Burdwan, as well as in that of the Executive Engineer, Damodar Canal Division, Burdwan.

In exercise of the powers conferred by the aforesaid section, the Governor in Council is pleased to authorise the officers for the time being engaged in the undertaking, with their servants and workmen, to enter upon and survey the land and do all other acts required or permitted by that section.

Any person interested in so much of the above land as are not waste or arable, who has any objection to the acquisition thereof, may, within thirty days after the date on which public notice of the substance of this notification is given in the locality, file an objection in writing before the Collector of Burdwan.

In exercise of the powers conferred by section 17(*4*) of the Land Acquisition Act, I of 1894, as amended by Act XXXVIII of 1923, the Governor in Council is pleased to direct that the provisions of section 5A of the Act shall not apply to the waste or arable portions of the land in this case

Burdwan.—No. 10023L.A. 13th July 1936.—Whereas it appears to the Governor in Council that land is likely to be required to be taken by Government at the public expense for a public purpose, viz., for the 11th mile of the Burdwan Arambag road in the villages of Sehara and Megalmari, jurisdiction list Nos 55 and 59, respectively, thana Raina, and in the village of Baragopinathpur, jurisdiction list No. 102, thana Khandaghosh, pargana Samarshahi, district Burdwan, it is hereby notified that for the above purpose a piece of land comprising parts of cadastral survey plot Nos. 3047-3050, 3052, 3053, 3082-3088, 3101-3104, 3108,

3141-3143, 3932-3936 and 3959-3962 in mauza Shehara, parts of cadastral survey plot Nos. 202, 281 and 282 in mauza Baragopinathpur, parts of cadastral survey plot Nos. 1-3, 8, 34-36, 41-46, 222-225, 229-233, 247-250, 281-283, 285, 286 and 325 in mauza Mogalmari, and measuring, more or less, 14·60 acres, is likely to be required within the aforesaid villages of Sehara, Mogalmari and Baragopinathpur.

This notification is made, under the provisions of section 4 of Act I of 1894, to all whom it may concern.

A plan of the land may be inspected in the office of the Special Land Acquisition Officer, Burdwan, as well as in that of the Executive Engineer, Burdwan Division.

In exercise of the powers conferred by the aforesaid section, the Governor in Council is pleased to authorise the officers for the time being engaged in the undertaking, with their servants and workmen, to enter upon and survey the land and do all other acts required or permitted by that section.

Any person interested in so much of the above land as are not waste or arable, who has any objection to the acquisition thereof, may, within thirty days after the date on which public notice of the substance of this notification is given in the locality, file an objection in writing before the Collector of Burdwan.

In exercise of the powers conferred by section 17(*4*) of the Land Acquisition Act, I of 1894, as amended by Act XXXVIII of 1923, the Governor in Council is pleased to direct that the provisions of section 5A of the Act shall not apply to the waste or arable portions of the land in this case.

DECLARATIONS.

24-Parganas.—No. 9731L.A.—7th July 1936.—Whereas it appears to the Governor in Council that land is required to be taken by Government at the expense of the Kanchrapara Municipality for a public purpose, viz., for a road to connect station road with E. B. Railway land, in the village of Halisahar, jurisdiction list No. 6, in thana Bijpur, pargana Havelisahar, district 24-Parganas, it is hereby declared that for the above purpose a piece of land comprising portions of cadastral plot No. 7290, and measuring, more or less, 0·0964 of an acre, is required within the aforesaid village of Halisahar.

This declaration is made, under the provisions of section 6 of Act I of 1984, to all whom it may concern.

A plan of the land may be inspected in the office of the Chairman, Kanchrapara Municipality, as well as in that of the Land Acquisition Deputy Collector, Alipore, 24-Parganas.

Pabna.—No. 9746L.A.—7th July 1936.—Whereas it appears to the Governor in Council that land is required to be taken by Government at the expense of the Pabna Municipality for a public purpose, viz., for the extension of the Muhammadan burial ground, in the village of Dakshin Raghabpur, jurisdiction list No. 111, in thana Pabna, pargana Rokanpur, district Pabna, it is hereby declared that for the above purpose a piece of land comprising cadastral plots Nos. 641, 642, 644, 646 in full and 640, 636 in parts, and measuring, more or less, 1·480 acres, is required within the aforesaid village of Dakshin Raghabpur.

This declaration is made, under the provisions of section 6 of Act I of 1894, to all whom it may concern.

A plan of the land may be inspected in the office of the Collector of Pabna.

Burdwan.—No. 9761L.A.—7th July 1936.—Whereas it appears to the Governor in Council that land is required to be taken by Government at the public expense for a public purpose, viz., for construction of the 7th, 8th, 9th and part of 10th mile up to chainage 36 and 80 feet of the distributary No. 11, branch canal, Damodar Canal Project in the villages of Belenda, Balsidanga, Eorachak, Arra, Amarun, Nawada and Sunur, jurisdiction list Nos. 61, 60, 59, 58, 99, 100 and 101, respectively, in thana Bhatar, parganas Azmatsahi, Mazafarsahi and Shahabad, district Burdwan, it is hereby declared that for the above purpose four pieces of land comprising parts of cadastral survey plots Nos. 449, 461-463, 468, 492-496, 498, 539, 541, 542, 546 and 547 in mauza Belenda; parts of cadastral survey plots Nos. 5, 94, 95, 97-99, 169, 170, 173, 174, 178, 179, 183-188, 229, 230, 238-240, 242, 248, 249, 251 and 253 in mauza Balsidanga; parts of cadastral survey plots Nos. 456, 457, 461-463, 465, 467, 468, 472, 473, 482, 483, 485, 486, 915-917 and 926 in mauza Eorachak; parts of cadastral survey plots Nos. 348, 353-359, 438, 443-445, 448-450, 737, 739, 740, 742, 743, 745, 765, 766, 768-771, 806, 2064, 2065, 2067-2069, 2071, 2074, 2084, 2085 and 2092-2095 in mauza Arra; parts of cadastral survey plots Nos. 1526, 1527, 1536-1540, 1543, 1558-1560, 1562, 2706, 2709, 2710, 2721, 2724-2727, 2736 and 2738 in mauza Amarun; parts of cadastral survey plots Nos. 14 and 330 in mauza Nawada; parts of cadastral survey plots Nos. 162, 164, 166, 175-178, 180, 195, 196, 318, 321, 324-332, 336-338, 490, 492, 494-497, 507, 520-523, 526 and 919 in mauza Sunur, and altogether measuring, more or less, 18·57 acres, are required within the aforesaid villages of Belenda, Balsidanga, Eorachak, Arra, Amarun, Nawada and Sunur.

This declaration is made, under the provisions of section 6 of Act I of 1894, to all whom it may concern.

A plan of the land may be inspected in the office of the Special Land Acquisition Officer, Burdwan, as well as in that of the Executive Engineer, Damodar Canal Division, Burdwan.

Noakhali.—No. 9949L.A.—10th July 1936.—Whereas it appears to the Governor in Council that land is required to be taken by Government at the expense of the Joypur union board for a public purpose, viz., for a village play ground in the village of Joypur, pargana, Dakshinshik, thana Chhagalnaiya, zilla Noakhali, it is hereby declared that for the above purpose a piece of land measuring, more or less, 1·70 acres comprising parts of cadastral survey plots Nos. 2588, 2604, 2600, 2603 2602 and whole of 2605, is required within the aforesaid village of Joypur.

This declaration is made, under the provisions of section 6, Act I of 1894, to all whom it may concern.

A plan of the land may be inspected in the office of the Collector of Noakhali.

Burdwan.—No. 9952L.A.,—10th July 1936.—Whereas it appears to the Governor in Council that land is required to be taken by Government at the public expense for a public purpose, viz., for road approach to bridge at chainage 33 and 43 feet of distributary No. 8A/1, branch canal, Damodar Canal Project, in the villages of Gramdihi and Dhandalsa, jurisdiction list Nos. 17 and 24, respectively, thana Bhatar, pargana Burdwan, district Burdwan, it is hereby declared that for the above purpose two pieces of land comprising parts of cadastral survey plot Nos. 2712, 2713, 2715 and 2720 in mauza Gramdihi and part of cadastral survey plot No. 1 in mauza Dhandalsa, and altogether measuring, more or less, 0·107 of an acre, are required within the aforesaid villages of Gramdihi and Dhandalsa.

This declaration is made, under the provisions of section 6 of Act I of 1894, to all whom it may concern.

A plan of land may be inspected in the office of the Special Land Acquisition Officer, Burdwan, as well as in that of the Executive Engineer, Damodar Canal Division, Burdwan.

Burdwan.—No. 9955L.A.—10th July 1936.—Whereas it appears to the Governor in Council that land is required to be taken by Government at the public expense for a public purpose, viz., for road approach at mile 7 chainage 25 and 40 feet of distributary No. 11, branch canal, Damodar Canal Project, in the village of Eorachak, jurisdiction list No. 59, thana Bhatar, pargana Shahabad, district Burdwan, it is hereby declared that for the above purpose two pieces of land comprising parts of cadastral survey plots Nos. 915-917, and althogether, measuring more or less, 0·22 of an acre, are required within the aforesaid village of Eorachak.

This declaration is made, under the provisions of section 6 of Act I of 1894, to all whom it may concern.

A plan of the land may be inspected in the office of the Special Land Acquisition Officer, Burdwan, as well as in that of the Executive Engineer, Damodar Canal Division, Burdwan.

Burdwan.—No. 9958L.A.—10th July 1936.—Whereas it apperas to the Governor in Council that land is required to be taken by Government at the public expense for a public purpose, viz., for a road approach at mile 9 chainage 10 and 60 feet of distributary No. 11, branch canal, Damodar Canal Project, in the village of Sunur, jurisdiction list No. 101, thana Bhatar, pargana Shahabad, district Burdwan, it is hereby declared that for the above purpose two pieces of land comprising parts of cadastral survey plots Nos. 317-319, 321 and 920, and altogether measuring, more or less, 0·17 of an acre, are required within the aforesaid village of Sunur.

This declaration is made, under the provisions of section 6 of Act I of 1894, to all whom it may concern.

A plan of the land may be inspected in the office of the Special Land Acquisition Officer, Burdwan, as well as in that of the Executive Engineer, Damodar Canal Division, Burdwan.

Howrah.—No. 9967L.A.—10th July 1936.—Whereas it appears to the Governor in Council that land is required to be taken by Government at the expense of the Howrah Municipality for a public purpose, viz., for easing and widening a portion at the junction of Kamini School Lane and Uttam Charan Ghosh Lane in the village of Salkia, pargana Paikan, zilla Howrah, it is hereby declared that for the above purpose a piece of land measuring, more or less, 0·006 of an acre, bounded on the—

North—By land of Basanta Kumar Pathak and Uttam Charan Ghosh Lane,

East and South—By Kamini School Lane,

West—By land of Basanta Kumar Pathak,

is required within the aforesaid village of Salkia.

This declaration is made, under the provisions of section 6 of Act I of 1894, to all whom it may concern.

A plan of land may be inspected in the office of the Collector of Howrah.

Calcutta.—No. 9976L.A.—10th July 1936.—Whereas it appears to the Governor in Council that land is required to be taken by Government at the expense of the Corporation of Calcutta for a public purpose, viz., for widening a portion of Annada Banerjee Lane in Ward No. XXII of the Calcutta Municipality in the city of Calcutta, it is hereby declared that for the above purpose a piece of land being a portion of premises No. 19, Ashutosh Mukherjee Road, and measuring, more or less, 2 cottahs 3 chittacks and 10 s.ft. of standard measurement, equivalent to 0·0364 of an acre bounded on the—

North—By the remaining portion of premises No. 19, Ashutosh Mukherjee Road and a portion of premises No. 2/1, Dr. Rajendra Road formed out of premises No. 17, Ashutosh Mukherjee Road

East and South—By Annada Banerjee Lane,

West—By Annada Banerjee Lane and the remaining portion of premises No. 19, Ashutosh Mukherjee Road,

is required within the aforesaid Ward No. XXII of the Calcutta Municipality in the city of Calcutta.

This declaration is made, under the provisions of section 6 of Act I of 1894, to all whom it may concern.

A plan of the land may be inspected in the office of the First Land Acquisition Collector, at No. 5, Bankshall Street, Calcutta.

Excise.

NOTIFICATIONS.

Minister-in-charge: The Hon'ble Sir Bijoy Prasad Singh Roy, Kt.

Dinajpur-Chittagong.—No. 663Ex.—9th July 1936.—Maulvi Kazi Barkat Ali, Inspector of Excise and Salt, in charge, Dinajpur, is posted to Chittagong on the expiry of his leave and placed in charge of the district.

Mymensingh-Jessore-Khulna.—No. 664Ex.—9th July 1936.—Babu Probodh Chandra Sen, Superintendent of Excise and Salt, Mymensingh, is posted to Jessore-Khulna on the expiry of his leave.

Jessore-Khulna-Nadia.—No. 665Ex.—9th July 1936.—Babu Dwijendra Nath Chatarji, No. I, Inspector of Excise and Salt-in-charge, Jessore-Khulna, is transferred to Nadia and placed in charge of the district.

Mymensingh.—No. 666Ex.—9th July 1936.—Maulvi Motahar Hossain Khan, Superintendent of Excise, under orders of transfer to Naogaon, Rajshahi, is posted to Mymensingh on the expiry of his leave.

Mymensingh-Dinajpur.—No. 667Ex.—9th July 1936.—Babu Haridas Sen, Inspector of Excise and Salt-in-charge of Mymensingh, is transferred to Dinajpur and placed in charge of the district.

No. 677Ex.—9th July 1936.—Babu Mukunda Prasad Sen, a temporary Superintendent of Excise and Salt, is appointed on probation to the Bengal Excise Service, with effect from the 16th May 1936, *vice* Babu J. N. Gossain, retired.

Chittagong-Rajshahi.—No. 177T.Ex.—13th June 1936.—Babu Mukunda Prosad Sen, temporary Superintendent of Excise and Salt, Chittagong, is transferred to Naogaon, Rajshahi, *vice* Babu Kiran Chandra Basu.

J. B. KINDERSLEY,

Secy. to the Govt. of Bengal (offg.).

Orders by the Commissioner of Excise and Salt, Bengal.

No. 23Exc.—10th July 1936.—Maulvi S. M. Tafazzul Hussain, Inspector of Excise and Salt, is, on the expiry of his leave, posted to Calcutta and placed in charge of the Russa Distillery in the public interest.

A. S. LARKIN,

Commissioner of Excise and Salt, Bengal (offg.).

IRRIGATION DEPARTMENT.

NOTIFICATION.

No. 10-I.—4th July 1936. With reference to notification No. 9-I., dated the 24th June 1936, published at page 1657, Part I of the *Calcutta Gazette* of the 2nd July 1936, it is hereby notified for general information that the estimate of the probable expenses to be incurred in respect of the repairs, maintenance and works connected therewith of the Bishnupur zamindary embankment in the district of Midnapore named in the abovementioned notification for a period of twenty years commencing from 1st April 1938 amounts to Rs. 61,520 at an annual rate of Rs. 3,076 and that the Governor in Council proposes under section 63 of Act III (B.C) of 1882 to issue an order fixing the aforesaid total sum of Rs. 61,520 as payable at an annual rate of Rs. 3,076 during the said twenty years by the zamindars of the estates benefited by such repairs, maintenance and works, should no valid objection thereto be preferred. The areas of the several mauzas to be benefited by the said embankment are shown below :

Statement A.

List of mauzas benefited by the Bishnupur embankment.

Serial No.	Name of the mauza.	Thana No.	Thana.	Total area of the mauza.		Area benefited.		Partly or fully.
				Acres.	Dec.	Acres.	Dec.	
1	2	3	4	5	6	7	8	9
1	Paschimchak	237	Salang ..	575	95	39	31	Partly
2	Handol	238	Do. ..	520	26	419	01	Do
3	Panpara .. .	239	Do. ..	649	73	440	21	Do
4	Balpai	246	Do. ..	817	32	817	32	Fully.
5	Sallara	247	Do. ..	253	96	253	96	Do.
6	Tilacapara .. .	248	Do. ..	533	50	533	50	Do.
7	Jhaparara .. .	249	Do. ..	109	66	109	66	Do.
8	Gokulchak .	250	Do ..	235	59	195	46	Partly.
9	Radhakantapur	251	Do. ..	161	66	161	66	Fully.
10	Teghari ..	252	Do. ..	213	98	213	98	Do.
11	Dakhinbarh ..	253	Do. .	107	24	381	67	Partly.
12	Bhenma	258	Do. .	96-	80	269	21	Do
13	Mahi-amura .. .	259	Do .	110	97	110	97	Fully.
14	Anda . .	260	Do. ..	339	23	339	23	Do.
15	Jankibarh	266	Do. .	208	90	74	69	Partly
16	Gopalpore . .	267	Do. .	287	88	287	88	Fully.
17	Basantapore .	270	Do .	180	75	70	44	Partly
18	Moshara ..	271	Do. .	204	70	204	70	Fully.
19	Kaybarh . ..	272	Do.	150	55	150	55	Do.
20	Khoral .. .	273	Do. ..	454	62	454	62	Do.
21	Nilat	274	Do ..	153	59	153	59	Do.
22	Baicha	275	Do. ..	184	63	180	63	Do.
23	Perua .. .	276	Do ..	636	49	636	49	Do.
24	Barakol'la . .	277	Do.	109	48	109	48	Do.
25	Kerar . ..	278	Do. ..	355	79	111	76	Partly.
26	Ochitpore . ..	279	Do. ..	345	44	8	02	Do.
27	Ordhabpore . ..	280	Do. .	318	29	318	29	Fully.
28	Bahabalpore . ..	281	Do .	285	29	285	29	Do.
29	Gundut .. .	282	Do. .	778	94	778	94	Do
30	Ruinan	283	Do.	905	61	905	61	Do.
31	Barnan . .	284	Do.	608	36	608	86	Do
32	Sulbul . .	285	Do. ..	139	21	139	21	Do
33	Birthama .	286	Do. ..	224	13	224	13	Do.
34	Gora . .	287	Do. ..	217	06	217	06	Do.
35	Rakatya .. .	288	Do	125	48	125	48	Do
36	Gopalchak	367	Do. ..	182	53	132	53	Do.
37	Basudebpore	368	Do ..	128	24	128	24	Do
38	Birbhanupur .. .	369	Do. .	110	45	110	45	Do
39	Haribarpore .. .	370	Do. ..	312	09	312	09	Do
40	Sulya . .	371	Do ..	111	42	111	42	Do.
41	Kalyanpore .. .	372	Do. ..	224	61	224	61	Do.
42	Narayanbarh .. .	373	Do .	4716	04	674	11	Partly.
43	Sadulhyapore	374	Do. ..	99	76	99	76	Fully.
44	Monoharpore	375	Do. ..	322	53	123	50	Partly.

Serial No.	Name of the mauza.	Thana No.	Thana.	Total area of the mauza.		Area benefited.		Partly or fully.
				Acres.	Dec.	Acres.	Dec.	
1	2	3	4	5	6	7	8	9
45	Amarbarh	376	Sabong ..	127	02	60	56	Partly.
46	Dakhinbansbani	377	Do. ..	172	80	138	56	Do.
47	Uttar Bansbani	378	Do. ..	271	69	208	71	Do.
48	Gumai	379	Do. ..	237	64	237	64	Fully.
49	Benia	380	Do. ..	173	36	173	36	Do.
50	Kundara	381	Do. ..	355	58	355	58	Do.
51	Kapasda	382	Do. ..	699	06	699	06	Do.
52	Khopal	383	Do. ..	324	02	324	02	Do.
53	Rambarh	384	Do. ..	158	33	158	33	Do.
54	Bikalbarh	385	Do. ..	182	99	182	99	Do.
55	Bhanjapore	386	Do. ..	499	64	499	64	Do.
56	Baharkundra	387	Do. ..	69	72	69	72	Do.
57	Bural	388	Do. ..	1,037	29	1,037	29	Do.
58	Sitalda	389	Do. ..	669	22	669	22	Do.
59	Rambhadrapore	390	Do. ..	863	64	863	64	Do.
60	Mirzapore	391	Do. ..	69	48	69	48	Do.
61	Shibchak	392	Do. ..	329	42	329	42	Do.
62	Barada	393	Do. ..	432	12	432	12	Do.
63	Katina	396	Do. ..	221	00	102	89	Partly.
64	Murarichak	401	Do. ..	438	23	438	23	Fully.
65	Kalidaha Chara	400	Do. ..	325	55	325	55	Do.
66	Markanda Chak	402	Do. ..	230	94	230	94	Do.
67	Nonamadhabchak ..	403	Do. ..	251	48	251	48	Do.
68	Chak Madhab	406	Do. ..	166	78	166	78	Do.
69	Bishnupore	407	Do. ..	2,365	37	2,365	37	Do.
70	Masumpore	409	Do. ..	648	88	97	30	Partly.
	Total benefited area ..	..	....	..	..	22,737	95	

Any person interested, who desires to object to the abovementioned order, is required to prefer, within three months from the date of its first publication of this notification in the *Calcutta Gazette*, such objection as he may think proper to the Collector of Midnapore for consideration by the Governor in Council.

H. S. E. STEVENS,
Secy. to the Govt. of Bengal.

BENGAL LEGISLATIVE COUNCIL DEPARTMENT.

NOTIFICATION.

No. 1812L.C.—7th July, 1936.—It is hereby notified in pursuance of rule 14(*9*) of the Bengal Electoral Rules that Maulvi Moslem Ali Molla has been declared under rule 14(*2*) of the aforesaid rules to have been duly elected by the Rajshahi South (Muhammadan) Constituency to be a member of the Bengal Legislative Council.

K. ALI AFZAL, *Asst. Secy.*,
for *Secy. to the Bengal Legislative Council*
(*on leave*).

TREASURY NOTICES.

Alipore, the 11th July 1936.

The uncovenanted Deputy Collector Maulvi Ahmad Hossain has been placed in executive charge of the District Treasury at Alipore, 24-Parganas, and he is authorised to draw bills on other treasuries.

H. GRAHAM, *Collector.*

Orders by the Deputy Accountant-General, Bengal.

The Treasury Buildings, the 9th July 1936.

It is notified that the refund order book No. 7852 containing 50 orders "White" is in use by the Income Tax Office, Military Circle, Meerut, with effect from the 27th June 1936.

C. BHASKARAIYA,
Dy. Accountant-General, Bengal.

SHERIFF'S OFFICE.

The 9th July 1936.

Notice is hereby given that the Fourth Criminal Sessions of the year 1936 of the High Court of Judicature at Fort William in Bengal for the town of Calcutta and Factory of Fort William and the places subordinate thereto will be held at the Court House in the town of Calcutta, on Monday, the 3rd day of August next, at 11 o'clock in the forenoon, and thenceforward from day to day until the said sessions be over. And it is hereby proclaimed that all persons who are to prosecute any of the prisoners to be brought up for trial at the said sessions be present then and there to prosecute.

C. G. ARTHUR, *Sheriff.*

শরিফ আফিস, সন ১৯৩৬ সাল, তারিখ ৯ই জুলাই।

সকলকে সমাচার দেওয়া যাইতেছে যে, সুবে বাঙ্গালার ফোর্ট উইলিয়ম দুর্গের অধীন সহর কলিকাতার ও অন্যান্য স্থানের ফৌজদারী বিচার নিষ্পত্তি জন্য আগামী সন ১৯৩৬ সালের ৩রা আগষ্ট সোমবার বেলা ১১ ঘটিকার সময় এবং যে পর্য্যন্ত সেশিয়ানের কার্য্য সমাধা না হয়, প্রতিদিন উক্ত সময়ে কলিকাতার হাইকোর্টের আপন আদালত ঘরে সন ১৯৩৬ সালের চতুর্থ ক্রিমিনেল সেশিয়ান বসিবেক এবং এতদ্বারা প্রচার করা যাইতেছে যে, যে সকল ব্যক্তি কোন কয়েদীর বিরুদ্ধে ফৌজদারী মিছিল করিবেক, তাহারা উক্ত স্থানে উক্ত সময়ে হাজির থাকিয়া মোকদ্দমা করে। ইতি।

সি, জি, আর্থার,

শরিফ।

HIGH COURT NOTICES.

Civil.

The 7th July 1936.

No. 15002A.—Mr. Bikas Chandra Ghosh, munsif, under orders of transfer to Patuakhali, in the district of Bakarganj, is vested with the powers of a Judge of a Court of Small Causes for the trial of suits cognizable by such a Court up to the value of Rs. 50 within the local limits of the Patuakhali munsifi.

No. 15005A.—Maulvi Md. Akkas Ali Khan, munsif, under orders of transfer to Krishnagar, in the district of Nadia, is vested with the powers of a Judge of a Court of Small Causes for the trial of suits cognizable by such a Court up to the value of Rs. 100 within the local limits of the Krishnagar munsifi.

The 8th July 1936.

No. 15143A.—Babu Nishakar Chaudhuri, munsif of Midnapore (Sadar), is vested with the powers of a Judge of a Court of Small Causes for the trial of suits cognizable by such a Court up to the value of Rs. 100 within the local limits of the Sadar munsifi of Midnapore.

English Department.

ISSUED BY AUTHORITY OF THE HIGH COURT OF JUDICATURE AT FORT WILLIAM IN BENGAL.

The 11th July 1936.

No. 15450G.—The following amendment which has been made by the High Court of Judicature at Fort William in Bengal in Chapter V, Part II of the Rules of the High Court, Appellate Jurisdiction, 1936, is published for general information :—

Rule.

Add the following as proviso to rule 2(*f*),Chapter V, Part II, page 25, after the words "the value of the appeal":—

"Provided that in every case in which an appeal or cross-objection is preferred to this Court and the valuation, for the purposes of court-fees, or the court-fee paid, varies from that of the trial court, in the case of First Appeals, or from that of either the trial court or the lower appellate court, in the case of Second Appeals, the Advocate shall, at the time of filing the appeal, add below the valuation in the Memorandum of Appeal a short explanatory note setting forth the reasons for the variation, giving, if necessary, references to the certified copies of the judgment and decree, and mentioning the relevant pages thereof, which are filed with the Memorandum of Appeal. Any omission to file this note shall be forthwith reported to the Registrar, who may direct that the note be filed within a specified period according to the circumstances of each case or direct that the matter be laid before a Division Bench."

By order of the High Court,

E. S. SIMPSON, *Registrar.*

ORDERS BY COMMISSIONERS OF DIVISIONS.

Burdwan Division—Chinsura.

No. 1076M.—9th July 1936.—It is hereby notified for general information under section 50 of the Bengal Municipal Act, 1932 (XV of 1932), that the Commissioners of the Bankura Municipality in the district of Bankura, by a resolution passed at a special meeting held on the 17th June 1936, duly elected Babu Taragati Samanta to be their Vice-Chairman, *vice* Babu Kali Krishna Mitra, granted leave.

No. 1792L.S.-G.—9th July 1936.—It is hereby notified for general information that, under rule 20(*b*) read with rule 23 of the rules for the management of charitable hospitals and dispensaries in Bengal, Babu Amarendra Nath Mallik has been appointed to be a member of the committee for the management of the Rajendra Nath Mallick Hospital at Singur in the district of Hooghly, *vice* Mr. S. N. Mallick, O.I.E., deceased.

L. B. BURROWS, *Commissioner.*

Burdwan, the 6th July 1936.

It is hereby notified for general information that, under section 13 of the Bengal Village Self-Government Act, 1919 (Bengal Act V of 1919), read with rule 36 of the rules for the election and appointment of members of union boards, etc., Mr. J. M. Kerr has been appointed by the District Magistrate of Burdwan to be a member of the Burnpur union board in police-station Asansol in the Asansol subdivision of Burdwan, *vice* Mr. G. A. Young, resigned.

R. JOHNSTON, *District Magistrate.*

Suri, the 8th July 1936.

In modification of the notification No. 1917J., dated the 22nd February 1935, published in the *Calcutta Gazette* on 28th February 1935, Babu Mohini Mohon Bhattacharyya, Assistant Head Master of the Birbhum Zilla School, is appointed as Teachers' representative in the Managing Committee of the Birbhum Zilla School in place of Babu Kumud Nath Sen, transferred.

[ILLEGIBLE], for *District Magistrate.*

Orders by the Deputy Inspector-General of Police, Burdwan Range.

Chinsura.—No. 5603.—10th July 1936.—Babu Gostha Bihari Datta, Inspector, Birbhum, is granted 8 months' leave on average pay, on medical certificate, under rule 81 (*b*) (*ii*) of the Fundamental Rules.

J. M. MACKENZIE,

Deputy Inspector-General of Police (offg.).

Chittagong Division—Chittagong.

No. 3231G.—6th July 1936.—Under rule 20(*l*) of the rules for the management of hospitals and dispensaries in Bengal, it is hereby notified for general information that the gentlemen named below have been appointed to be members of the managing committee of the P. K. Roy Charitable Dispensary at Maheshkhali in the district of Chittagong :—

Rai Kshirod Chandra Ray Bahadur.
Maulvi Abdul Latif Khandakar.
Babu Manindra Lal Chakraborty, Tahsildar.
Maulvi Abdulla Khan.
Maulvi Abul Khair.
Maulvi Moqbul Ahmad Muktear.
Maulvi Haji Hamid Ali.
Maulvi Ali Ahmad.
Maulvi Hamza Meah Sikdar.
Md. Jahir Sawdagar.
Babu Mahendra Chandra Pal.
Mong Agga Phru.

No. 3324G.—9th July 1936.—Babu Sudhangsu Bimal Das Gupta, Sub-Deputy Collector, who has been posted to the Chittagong Division in Government notification No. 5346A., dated the 30th June 1936, is posted to the headquarters station of the Chittagong district for employment on general duty.

J. D. V. HODGE, *Commissioner (offg.).*

Noakhali, the 6th July 1936.

No. 6456J.—Under clause (*5*) of rule 19 of the Bengal Electoral Rules, 1926, it is hereby notified for information of all concerned that the returns of election expenses supported by declarations for the by-election of a member from the Noakhali East Muhammadan Constituency of the Bengal Legislative Council held on 14th May 1936 were lodged in this office by the following candidates on dates noted against each :—

(1) Faizar Rahman Moulvi, Muktear—27th June 1936.
(2) Maulvi Mohammad Sadeque Miah, B.L.—29th June 1936.

Any person shall, on payment of a fee of one rupee, be entitled to inspect any of the above return or declaration in the office of the District Magistrate, Noakhali, between the hours of 11 a.m. and 5 p.m. on office days.

Noakhali, the 9th July 1936.

No. 6538J.—It is hereby notified for general information that, under section 13 of the Bengal Village Self-Government Act (Act V of 1919), read with rule 36 of the rules for election and appointment of members of union boards, Munshi Md. Ilyas of Char Kalidas has been duly elected to be a member of Faradnagar union board No. 14 within police-station Feni in the subdivision of this district, *vice* Munshi Mosharaf Ali Chaudhury, deceased.

No. 6540J.—It is notified for general information that, under section 13 of the Bengal Village Self-Government Act (Act V of 1919), read with rule 36 of the rules for the election and appointment of members of union boards, Munshi Asad Mia Patary of Majhirgaon has been duly elected to be a member of Lamchar union board No. 7 within police-station Begumgonj in the Sadar subdivision of the district of Noakhali, *vice* Munshi Abdul Halim, deceased.

No. 6542J.—It is hereby notified for general information that, under section 13 of the Bengal Village Self-Government Act (Act V of 1919), read with rule 36 of the rules for the election and appointment of members of union boards, Maulvi Md. Habibulla Mia of Lakshmipur has been appointed to be a member of Banchhanagar union board No. IV within police-station Lakshmipur in the Sadar subdivision of the district of Noakhali, *vice* Maulvi Abdul Majid Chaudhury, resigned.

No. 6580J.—It is notified for general information that, under section 13 of the Bengal Village Self-Government Act (Act V of 1919), read with rule 35 of the rules for the election and appointment of members of union boards, Babu Sasthi Charan Karmakar, son of Babu Ramesh Chandra Karmakar, of Maitbhanga, has been duly elected to be a member of Maitbhanga union board No. XI within the police-station Sandwip in the Sadar subdivision of the district of Noakhali, *vice* Babu Anath Bandhu Karmakar, deceased.

R. A. DUTCH, *District Magistrate.*

Comilla, the 8th July 1936.

No. 6387M.—It is hereby notified for general information that, under section 13 of the Bengal Village Self-Government Act, 1919, read with section 6(2) and rule 35 of the rules for the election and appointment of members of union boards, Afiluddin Bepari, son of Kalamaddin Bepari, of village Bagdahar, has been duly elected as a member of the Nabinagar union board No. VIII of the Nabinagar police-station in the Brahmanbaria subdivision of the district of Tippera, *vice* Maulvi Fazle Ali Khan, deceased.

J. P. RAY, *Additional District Magistrate.*

Chittagong, the 10th July 1936.

No. 8196.—It is hereby notified for general information that, under section 13 of the Bengal Village Self-Government Act, 1919 (Bengal Act V of 1919), read with rule 35 of the rules for the election and appointment of members of union boards, Babu Surendra Bijoy Pal has been duly elected to be a member of Haildhar union board No. IX in police-station Anwara in the (B) subdivision of the Chittagong district, *vice* Maulvi Abdul Karim Chowdhury, deceased.

G. L. HYLE, *Addl. District Magistrate.*

Orders by the Deputy Inspector-General of Police, Bakarganj Range.

Barisal.—No. 3361.—9th July 1936.—Maulvi Muhammad Lal Mian, officiating Inspector, Bakarganj, will continue to act as such with effect from 20th June 1936, *vice* Babu Haridas Mukharji, Inspector, temporarily employed in the Intelligence Branch.

G. H. MANNOOCH,

Deputy Inspector-General of Police (offg.).

Dacca Division—Dacca.

No. 3514J.— 10th July 1936.—Maulvi Abdul Karim, No. II, Sub-Deputy Collector, Dacca, is appointed to be Circle Officer of Islampur Circle in the Jamalpur subdivision of the district of Mymensingh.

No. 3521J.—10th July 1936.—Babu Dwarka Nath Das, Sub-Deputy Collector, Dacca, is allowed leave on average pay for six days, under rule 81 (*b*) (*ii*) of the Fundamental Rules, with effect from the 13th July 1936.

L. R. FAWCUS, *Commissioner.*

Faridpur, the 3rd July 1936.

No. 5569J.—It is hereby notified for general information that, under section 13 of the Bengal Village Self-Government Act, 1919 (Act V of 1919), Munshi Chhitu Howladar has been duly elected to be a member of the Senerchar union board in police-station Janjira in the Madaripur subdivision of the Faridpur district, *vice* Munshi Amanulla, deceased.

Faridpur, the 6th July 1936.

No. 5571J.—It is hereby notified for general information that—

(*a*) Under sub-section (2) of section 6 of the Bengal Village Self-Government Act, 1919 (Bengal Act V of 1919), the following gentlemen have been duly elected to be members of the Dadsi union board in police-station Rajbari of the Goalundo subdivision of the Faridpur district :—

M. Enayet Pir Choudhury.
Babu Prokash Chandra Chakravorty.
Babu Jitendra Nath Das.
Babu Jogendra Nath Bhadra.
Munshi Abdul Gaffur Molla.
Munshi Sadar Shaikh Matbar.

(*b*) Under sub-section (3) of section 6 of the Act, the following gentlemen have been appointed by the District Magistrate of Faridpur to be members of the said union board :—

Md. Mafizuddin Mallik.
Babu Rajendra Nath Sen.
M. Khademali Munshi.

Faridpur, the 8th July 1936.

No. 5951J.—It is hereby notified for general information that, under section 13 of the Bengal Village Self-Government Act, 1919 (Act V of 1919), Maulvi Giasuddin has been duly elected to be a member of the Gharua union board in police-station Bhanga in the Sadar subdivision of the Faridpur district, *vice* Munshi Abdul Sattar Khalifa, removed.

Faridpur, the 13th July 1936.

No. 5570J.—It is hereby notified for general information that—

(*a*) Under sub-section (*2*) of section 6 of the Bengal Village Self-Government Act, 1919 (Bengal Act V of 1919), the following gentlemen have been duly elected to be members of the Bagmara union board in police-station Rajbari of the Goalundo subdivision of the Faridpur district :—

Maulvi Abdul Quader.
Munshi Masemali Mridha.
Munshi Hatemali Shaikh.
Babu Anath Bandhu Bosu.
Babu Jadu Nath Das.
Maulvi Md. Abdul Gani Mia.

(*b*) Under sub-section (*3*) of section 6 of the Act, the following gentlemen have been appointed by the District Magistrate of Faridpur to be members of the said union board :—

Maulvi Khondaker Raisuddin Ahmed.
Babu Banka Behari Chakravorty.
Munshi Basiruddin Ahmed.

No. 5572J.—It is hereby notified for general information that—

(*a*) Under sub-section (*2*) of section 6 of the Bengal Village Self-Government Act, 1919 (Bengal Act V of 1919), the following gentlemen have been duly elected to be members of the Banibaha union board in police-station Rajbari of the Goalundo subdivision of the Faridpur district :—

Babu Tripura Sankor Mazumdar.
Md. Abdulali Mandal.
Babu Abinash Chandra Das.
Babu Rashik Lal Munshi.
Babu Purna Chandra Joardar.
Babu Satish Chandra Bala.

(*b*) Under sub-section (*3*) of section 6 of the Act, the following gentlemen have been appointed by the District Magistrate of Faridpur to be members of the said union board :—

Abdul Karim Biswas.
Babu Narendra Krishna Roy.
Md. Jasarath Khan.

K. A. L. HILL, *District Magistrate.*

Barisal, the 7th July 1936.

No. 4657J.—It is hereby notified for general information that, under section 13 of the Bengal Village Self-Government Act, 1919 (Bengal Act V of 1919), Babu Bepin Chandra Howladar has been appointed to be a member of the Dhali Gournagar union board in police-station Lalmohon in the Bhola subdivision of the Bakarganj district, *vice* Babu Ram Saran Das Howladar, deceased.

A. HYE, *Addl. District Magistrate.*

Mymensingh, the 8th July 1936.

No. 624C.—It is hereby notified for general information that, under section 13 of the Bengal Village Self-Government Act, 1919 (Bengal Act V of 1919), read with rule 36 of the rules for the appointment of members of union boards, etc., under the said Act, Babu Rajani Kanta Dey Sarkar of Jainati has been appointed a member of the Sakhui union board in Haluaghat police-station in the Sadar North subdivision of the Mymensingh district, *vice* Babu Ram Chandra Chakrabarty, deceased.

K. G. MURSHED, *District Magistrate.*

Presidency Division—Calcutta.

No. 1604R.G.—7th July 1936.—Babu Bibhas Chandra Ghosh, Sub-Deputy Collector, Murshidabad, is transferred to Sadar, Jessore.

No. 1611R.G.—7th July 1936.—Babu Phanindra Mohan Datta, Sub-Deputy Collector, is posted temporarily to Sadar, Nadia, on relinquishing charge of his settlement duty.

No. 1694L.S.-G.—8th July 1936.—It is hereby notified for general information that, under section 19 (*1*) of the Bengal Local Self-Government Act, III (B.C.) of 1885, as amended, Maulvi Abdul Ali, M.A., B.L., has been duly elected by the Magura local board, Jessore, to be a member of the Jessore district board in place of Maulvi Serajul Islam, M.A., B.L., resigned.

A. J. DASH, *Commissioner.*

Orders by the Deputy Inspector-General of Police, Presidency Range.

Calcutta.—No. 3755.—6th July 1936.—Babu Manoranjan Gupta, officiating Inspector, 24-Parganas, is reverted to his substantive rank of Sub-Inspector in the district of Nadia.

Sub-Inspector Khagendra Nath Mukharji of the 24-Parganas is appointed to act as Inspector, *vice* Babu Rasik Lal Chakrabatti, Inspector, of that district, granted leave.

The transfer is made in the interests of public service.

Armed Sub-Inspector Sitaram Singh of Khulna is appointed to act as Inspector, *vice* Khan Sahib Subadar Gulab Khan, Armed Inspector, Nadia, retired.

The transfer is made in the interests of public service.

L. H. BURTON,

Deputy Inspector-General of Police.

Orders by the Deputy Inspector-General of Police, Intelligence Branch.

Calcutta.—No. 1208/R.O.—6th July 1936.—Babu Tarak Prasad Bhattacharji, Inspector, is granted 1 month's leave on average pay in extension of the leave granted to him in para. 21 of the *Police Gazette*, dated 3rd July 1936.

C. E. S. FAIRWEATHER,

Deputy Inspector-General of Police (offg.).

Rajshahi Division—Jalpaiguri.

Erratum.—No. 3216M.—4th July 1936.—*For* "Babu Dhirendra Nath Bhowmick" *read* "Babu Dhirendra Kumar Bhowmick."

No. 2767J.—6th July 1936.—The following Sub-Deputy Collectors posted to the Rajshahi Division in Government notification No. 5526A., dated the 30th June 1936, are transferred to the stations mentioned against their names to work in the general line :—

Maulvi Nizamuddin Ahmad—Jalpaiguri.
Babu Prafulla Kumar Mandal—Rangpur.
Maulvi A. M. S. Mahmood—Bogra.

The transfers are made in the public interest.

No. 3231P.W.—7th July 1936.—It is hereby notified for general information that in exercise of the powers delegated to me by Bengal Government notification No. 3403L.S.-G., dated the 1st December 1904, I order the establishment under section 6(c) of the Bengal Ferries Act, I of 1885, of a new public ferry to be called the Ghagra ferry over Road No. 20 between Kakina and Aditmari in the district of Rangpur.

In exercise of the powers delegated to me by Bengal Government notification No. 217L.S.-G., dated the 12th January 1905, I also direct, under section 35 of the said Act that the said ferry shall be managed by the district board of Rangpur and that all the proceeds of the said ferry and all the fines levied and compensation received under the same Act in respect thereof shall be paid into the district fund with effect from the date of this notification.

No. 2800J.—8th July 1936.—Babu Krishna Chandra Banerjee, Sub-Deputy Collector, transferred to Rajshahi Division in Government notification No. 5326A., dated the 30th July 1936, is posted to Dinajpur Sadar to work as Circle Officer there.

The transfer is made in the public interest.

No. 2806J.—8th July 1936.—Babu Makhan Lal Banerjee, Sub-Deputy Collector and Circle Officer, Dinajpur, is transferred to Bera in the district of Pabna to work as Circle Officer.

The transfer is made in the public interest.

No. 2811J.—8th July 1936.—Maulvi Md. Ismail, Sub-Deputy Collector and Circle Officer, Bera, in the district of Pabna, is transferred to Pabna Sadar to work in the general line.

The transfer is made in the public interest.

No. 2827J.—9th July 1936.—Under the provisions of rule 63 (2) of Chapter IV of the Bengal Jail Code, I hereby appoint Babu Satish Chandra Basak and Maulvi Muhammad Hadesh Ali as non-official visitors of the Naogaon Sub-Jail for a period of two years.

No. 3301M.—10th July 1936.—In exercise of the power conferred on me by section 15 of the Bengal Ferries Act, I of 1885, I approved of the adoption, by the district board of Dinajpur, of the following sub-rule to rule 8 of the rules made under the said section for the district of Dinajpur and published under Government notification of 1st November 1887 :—

"The District Board Chairman may demand, in advance, before acceptance of the bid offered by any bidder of unknown status or of person of doubtful solvency, the entire amount of the bid or part thereof and reject his bid if the demand is not complied with."

F. W. ROBERTSON, *Commissioner.*

Bogra, the 1st July 1936.

No. 3154J.—It is hereby notified for general information that, under sub-section (2) of section 6 of the Bengal Village Self-Government Act, 1919 (Bengal Act V of 1919), the following gentlemen have been duly elected to be members of the undermentioned union boards in the district of Bogra :—

Adamdighi police-station.

Chhatingram union No. VII.

Ward No. I.

Babu Jatindra Nath Mondal.
Munshi Ghugur Ali Sardar.

Ward No. II.

Munshi Alamuddin Mondal.
Babu Sarada Nath Bagchi.

Ward No. III.

Munshi Hafezuddin Pramanik.
Munshi Jahiruddin Talukdar.

Panchbibi police-station.

Balighata union No. IV.

Ward No. I.

Munshi Kalimuddin Sarker.
Munshi Abdul Gaffur Chaudhuri.

Ward No. II.

Babu Birendra Kumar Das Gupta.
Munshi Basiruddin Molla.

Ward No. III.

Munshi Sarifuddin Chaudhury.
Babu Jajneswar Sarker.

No. 3155J. — It is hereby notified for general information that, under sub-section (3) of section 6 of the Bengal Village Self-Government Act, 1919 (Bengal Act V of 1919), the following gentlemen have been duly appointed to be members of the undermentioned union boards in the district of Bogra :—

Adamdighi police-station.

Chhatingram union No. VII.

Babu Jogendra Nath Chaudhury.
Munshi Syed Keramat Ali Khondker.
Maulvi Rahimuddin Mondal, B.Sc.

Panchbibi police-station.

Balighata union No. IV.

Munshi Abdul Gaffur Mondal
Babu Bijay Krishna Sarker, B.A.
Babu Indu Madhab Das.

Bogra, the 5th July 1936.

No. 3213J.—It is hereby notified for general information that, under sub-section (2) of section 6 of the Bengal Village Self-Government Act, 1919 (Bengal Act V of 1919), the following gentlemen have been duly elected to be members of the Simabari union board, police-station Sherpur, district Bogra :—

Simabari union No. IX.

Ward No. I.

Munshi Giran Baksha Akanda.
Munshi Abbas Ali Mondal
Munshi Rahimuddin Sarker.

Ward No. II.

Babu Digendra Nath Basak.
Dr. Md. Meher Baksha Sarker.
Munshi Mahim Sarker.

No. 3214J. - It is hereby notified for general information that, under sub-section (3) of section 6 of the Bengal Village Self-Government Act, 1919 (Bengal Act V of 1919), the following gentlemen have been duly appointed to be members of the Simabari union board, police-station Sherpur, district Bogra :—

Simabari union No. IX.

Maulvi Moula Baksha Sarker.
Babu Upendra Nath Sarker.
Babu Suresh Chandra Nandi.

T. I. M. NURANNABI CHAUDHURI,
District Magistrate.

Rajshahi, the 6th July 1936.

In consequence of the death of Khan Bahadur Maulvi Emaduddin Ahmed, B.L., who was one of the members of the managing committee of the Rajshahi Collegiate School, Dr. Joinal Abedin is appointed a member of the managing committee of the said school.

K. K. HAJARA, *District Magistrate.*

Registered No. C207

The Calcutta Gazette

THURSDAY, JULY 16, 1936.

PART I A

Orders and Notifications by the Government of India republished for general information.

DEPARTMENT OF COMMERCE.

NOTIFICATION.

REGISTRATION OF ACCOUNTANTS.

Simla, the 4th July 1936.

No. 12-A. (6)/35.—The following draft of a further amendment to the Auditor's Certificates Rules, 1932, which it is proposed to make in exercise of the powers conferred by sub-section (2) of section 144 of the Indian Companies Act, 1913 (VII of 1913), is published, as required by the said sub-section, for the information of all persons likely to be affected thereby, and notice is hereby given that the said draft will be taken into consideration on or after the 7th September 1936.

Any objection or suggestion which may be received from any person with respect to the draft before the aforesaid date will be considered by the Governor-General in Council :—

Draft amendment.

For rules 63 and 77 of the said Rules, the following rules shall be substituted respectively, namely :—

"63. Members of the Board (other than members who are in the service of Government and are entitled to travelling and daily allowances under the ordinary rules) shall receive travelling allowance and daily fee for attending the meetings of the Board and of the Committees thereof at the following rates :—

Travelling allowance.—One and a half of the first class fare by rail to and from the place of meeting and 1-3/5th of the first class fare by steamer for any portion of the journey performed by steamer.

Daily fee. Fifty rupees per day for the days of attendance at a meeting, provided that in the case of a member resident at the place of the meeting, the rate shall be Rs. 30 per day."

"77. Members of the Board (other than members who are in the service of Government and are entitled to travelling and daily allowances under the ordinary rules) shall receive travelling allowance and daily fee for attending the meetings of the Board at the following rates :—

Travelling allowance.—One and a half of the first class fare by rail to and from the place of meeting and 1-3/5th of the first class fare by steamer for any portion of the journey performed by steamer.

Daily fee.—Thirty rupees per day for the days of attendance at a meeting, provided that in the case of a member resident at the place of the meeting the rate shall be Rs. 20 per day."

H. DOW,

Addl. Secy. to the Govt. of India.

DEFENCE DEPARTMENT.

Simla, the 4th July 1936.

Part B.

No. 469.—In exercise of the powers conferred by section 113 of the Indian Army Act, 1911 (VIII of 1911), the Governor-General in Council is pleased to direct that the following further amendments shall be made in the Indian Army Act Rules, namely :—

In rule 51 of the said Rules—

(*i*) sub-rules (B) and (C) shall be omitted ;

(*ii*) sub-rules (D) and (E) shall be relettered (B) and (C) respectively ;

(*iii*) after sub-rule (C) as so relettered the following sub-rules shall be inserted, namely :—

"(D) Where the court are of opinion as regards any charge that the facts which they find to be proved in evidence differ materially from the facts alleged in the statement of particulars in the charge, but are nevertheless sufficient to prove the offence stated in the charge, and that the difference is not so material as to have prejudiced the accused in his defence, they may, instead of a finding of "Not guilty", record a special finding.

(E) The special finding may find the accused guilty on a charge, subject to the statement of exceptions or variations specified therein.

G. R. F. TOTTENHAM,

Secy. to the Govt. of India

DEPARTMENT OF INDUSTRIES AND LABOUR.

NOTIFICATIONS.

Simla, the 17th June 1936.

No. L.-3003.—In exercise of the power conferred by sub-section (*1*) of section 37 of the Tea Districts Emigrant Labour Act, 1932 (XXII of 1932), the Governor-General in Council is pleased to direct that the following further amendment shall be made in the Tea Districts Emigrant Labour Rules, 1933, namely :—

In sub-rule (2) of rule 60,

(*i*) for the words "Where a right of repatriation arises under section 9 in respect of the family of a deceased emigrant labourer who leaves no widow", the words "Where an emigrant labourer dies before the expiry of three years from his entry into Assam", shall be substituted ; and

(*ii*) after the words "each member of the family" the words "of the deceased labourer", shall be inserted.

A. G. CLOW,

Secy. to the Govt. of India (offg.).

Simla, the 1st July 1936.

No. L.-1750.—The following draft of a further amendment to the Indian Boiler Regulations, 1924, which it is proposed to make in exercise of the powers conferred by section 28 of the Indian Boilers Act, 1923 (V of 1923), is published as required by sub-section (*1*) of section 31 of the said Act, for the information of all persons likely to be affected thereby, and notice is hereby given that the said draft will be taken into consideration on or after the 15th September 1936. Any objection or suggestion which may be received in respect of the draft before the date specified will be considered by the Governor-General in Council :—

Draft amendment.

In Regulation 104 of the said Regulations, for sub-regulation (*d*), the following sub-regulation shall be substituted namely :—

"(*d*) The ultimate tensil breaking strength of the steel when in the billet or bar form shall not exceed 28 tons per square inch with an elongation of not less than 30 per cent. measured on Standard Test Piece F.".

The 2nd July 1936.

No. M.-1055.—*Corrigendum.*—In the Department of Industries and Labour notification No. M.-1055, dated the 27th June 1936, promulgating the Supplementary Coal Mines (Temporary) Regulations, 1936, published on pages 868 and 869 of Part I of the Gazette of India, dated the 27th June 1936,

(*i*) insert the words "free from gas" and a full stop at the end of regulation 4 (*1*), and

(*ii*) delete the dash after the colon in regulations 4 (*2*) and 5.

POSTS AND TELEGRAPHS BRANCH.

The 1st July 1936.

No. Es. A.-173/35 (Coll. No. 144).—In exercise of the powers conferred by the Indian Post Office Act, 1898 (VI of 1898), the Governor-General in Council is pleased to direct that the following further amendments shall be made in the Indian Post Office Rules, 1933, namely :—

1. (*a*) Rule 61 of the said Rules shall be renumbered as "61 (1)"

(*b*) in the *Explanation* to sub-rule (1) of rule 61 as so renumbered, for the word "rule" the word "sub-rule" shall be substituted ;

(*c*) after the *Explanation* to sub-rule (1) as so renumbered the following sub-rule shall be inserted, namely :—

"(2) No parcel shall be accepted for registration unless it bears the name and address of the sender written on the cover."

2. Rule 64 of the said Rules shall be renumbered as "64 (1)" and after sub-rule (1) as so renumbered the following sub-rule shall be inserted, namely :—

"(2) No article for which an acknowledgment is required under sub-rule (1) shall be accepted for registration unless it is accompanied by a prescribed form of acknowledgment duly filled in."

E. M. JENKINS,

Joint Secy. to the Govt. of India (offg.).

HOME DEPARTMENT.

NOTIFICATION.

JUDICIAL.

Simla, the 2nd July 1936.

No. F. 49/3/35.—In exercise of the powers conferred by section 14 of the Indian Motor Vehicles Act, 1914 (VIII of 1914), the Governor-General in Council is pleased to direct that the following further amendments shall be made in the Motor Vehicles International Circulation Rules, 1933, namely :—

(1) In Annex. C of the First Schedule to the said Rules, to the entries in the Note, the following entry shall be added, namely :—

"Iceland .. .. .. I.S." ;

(2) in the Second and Third Schedules to the said Rules, to the entries in the lists of Contracting States, the following entry shall be added, namely :—

"Iceland.".

J. A. THORNE,

Joint Secy. to the Govt. of India.

Registered No. C207

The Calcutta Gazette

THURSDAY, JULY 16, 1936.

PART IB

Educational Notices.

OVERSEER EXAMINATION BOARD.

Calcutta, the 2nd July 1936

Results of the Overseer Examination, 1936.

(In order of merit.)

N.B.—Failed students re-appearing in 1936 are marked (*a*).

Ahsanullah School of Engineering, Dacca.

First Division.

Roll No

44 Anil Kumar De
1 Pramode Ranjan Sen Sarma
2 Birendra Nath Das
4 Shaikh Md Nurul Hoque.
6 Samarendra Nath Ghose
45 Haripada Guha
46 Protul Chandra Bose
43 Jnanendra Narayan Guha Bakshi.
7 Narendra Nath Nath
3 Santi Ranjan Das Gupta
5 Birendra Nath Dutt
47 Basanta Kumar Roy

Second Division

67 Abdul Wadud
9 Kishori Mohan Deb Barman
48 Md Ashrat Ali Sarder
52 Kalipada Banerjee
50 Sushil Kumar Mitra
53 Kamakhya Charan Bandyopadhyaya.
20 Jitendra Chandra Paul
94 Sudhi Ranjan Sen Gupta (*a*)
8 Sisir Kumar Sen
30 Amal Chandra Bagchi
92 Bijoy Ballav Dutta (*a*).
62 Niranjan Behari Dutta Biswas.
54 Sitesh Chandra Choudhury

Roll No.

60 Satchidananda Das.
97 Durga Mohan Das (*a*)
32 Md Mahafuzar Rahaman Mandal
31 Amal Prosad Sen
10 Anadinath Ghosh
93 Rati Ranjan Majumdar (*a*)
58 Prokash Chandra Dutta
76 Debendradas Sanyal
59 Ramani Mohan Shome
51 Bejoy Kumar Sen
57 Nikhil Ranjan Sen Gupta.
56, 87 Md Ezharul Hoque / Kedar Mohan Banerjea (*a*)
22 Phanindra Chandra Sen Gupta.
103 Mohammad Ismail (*a*)
35 Mozaharuddin Ahmed
88 Benode Behari Bardhan (*a*).
49 Narendra Chandra Datta
12 Jyotish Chandra Sen
63 Amar Krishna Chakraborty
24 Madan Mohan Sarkar.

Third Division

95 Keshini Shudan Bysack (*a*)
64 Haradhan Saha
17 Himangshu Mohan Ghosh
68 Sukumar Bose
78 Md Abdul Qayyum
16 Jnan Ranjan Bandyopadhayaya.
108 Md Abdul Bari Biswas (*a*)
101 Md Kamaruddin (*a*)
98 Byomkes Dutt (*a*)
26 Satyanaravan Bhawal
33 Monomohan Basak
15 Narayan Chandra Gangopadhyay.
69 Mani Bhusan Chakravarty.
85 Anil Kumar Sarcar
18 Birendra Kumar Gupta
89 Jyotish Chandra Biswas (*a*)

Roll No.

77 Md. Inas Ali Sarkar.
73 Sudhir Chandra Ghose.
27 Raman Chandra Saha.
29 Sailendra Mohan Das.
91 Md. Bellaluddin Seikder (*a*).
106 Mahammad Abdul Haque (*a*).
100 Habibar Rahman Khan (*a*).
75 Satyendra Kumar Das.
102 Abhayapada Gangopadhya (*a*).
28 Birendra Kumar Bose.
107 Sunil Bikash Sen Gupta (*a*).
99 Haridas Deb (*a*).
81 Khondeker Tafazzal Hossain.
25 Santosh Kumar Ghatak.
70 Lal Behari Basak.
13 Pulin Behary Sinha.

Results of the Sub-Overseer Examination, 1936.

(In order of merit.)

N.B.—Failed students re-appearing in 1936 are marked (*a*).

"Burdwan" indicates District Board Technical School, Burdwan.

"Dacca" indicates Ahsanullah School of Engineering, Dacca.

"Pabna" indicates Elliott Banamali Technical School, Pabna

"Rajshahi" indicates Diamond Jubilee Industrial School, Rajshahi.

Higher Division.

Roll No.

6 Debes Chandra Biswas—Pabna.
68 Anil Kumar Das Gupta—Dacca.
98 Afsaruddin Ahmad—Dacca.
70 Md. Fazlur Rahman—Dacca.
97 Irengbam Gokul Chandra Singha—Dacca.
24 Jnanesh Chandra Sarswati—Rajshahi.
48 Dhirendra Nath Chattopadhyay—Burdwan
69 Nishi Kanta Das—Dacca.
27 Amarendra Nath Sinha—Rajshahi.
144 Santi Ranjan Roy (*a*)—Dacca.
101 Nares Chandra Mitra—Dacca.
110 Ratna Kanta Datta—Dacca.
1 Aswini Kumar Chaki—Pabna
96 Thakurman Singh—Dacca.
17 Sushil Kumar Ghose—Pabna.
79 Narendranath Dutta—Dacca.
99 Mohendra Lal Sen Purkayastha—Dacca
121, 103 Anil Chandra Dey—Dacca. / Devapriya Jinakumar Barua—Dacca.
73 Hemanta Kumar Das—Dacca.
30 Monomohan Chakraborty—Rajshahi.
76 Bibhuti Bhusan Nag—Dacca.
4 Bimalendu Mohan Biswas—Pabna.
127, 49 Bimal Kumar Kar (*a*)—Dacca. / Nitya Gopal Bandyopadhyay—Burdwan.
74 Usharanjan Gupta—Dacca.
2 Amarendra Nath Karr—Pabna.
100 Robindra Nath Das Gupta—Dacca
111, 23 Biswambar Pal—Dacca. / Bibhuti Bhusan Adhikary—Rajshahi.
133 Jagatjyoti Barman (*a*)—Dacca

Lower Division.

9 Krishna Gopal Thakur—Pabna.
10 Md. Shams Uddin—Pabna.
19 Nani Gopal Das Gupta (*a*)—Pabna.
15 Surendra Kumar Bhowmik—Pabna.
16 Sushil Kumar Sen—Pabna.
21 Santi Bhuson Choudhury (*a*)—Pabna.
85 Saroj Kumar Das Gupta—Dacca.
130 Santosh Kumar Sarkar (*a*)—Dacca.

Roll No.

109 Nripendra Nath Chattopadhyaya—Dacca.
20 Satyendra Nath Basu (*a*)—Pabna.
82 Dhirendra Nath Ghose—Dacca.
25 Bibhuti Bhusan Misra—Rajshahi.
86 Sukhendu Kumar Sen—Dacca.
32 Jatindra Nath Mani—Rajshahi.
11 Md. Abdul Hossain Meah—Pabna.
55, 131 Saktipada Das—Burdwan. / Sarada Ranjan Roy (*a*)—Dacca.
95 Haridas Das—Dacca
33 Sukumar Bhattacherjee—Rajshahi.
129 Nani Gopal Basak (*a*)—Dacca.
88, 107 Jnan Sankar Chakravorty—Dacca. / Sukumar Gupta—Dacca.
34 Syamapada Bhattacharyya—Rajshahi.
143, 18 Muhammad Mujiruddin (*a*)—Dacca. / Upendra Nath Paul—Pabna.
14 Nripendra Nath Saha—Pabna
128, 115 Sachi Kanto Paul (*a*)—Dacca. / Kshitindra Mohan Datta—Dacca.
106 M Nuruzzaman—Dacca.
93 Nirmal Chandra Laha—Dacca.
81 Sukesh Kumar Pramanik—Dacca.
54 Ramani Mohan Sarkar—Burdwan.
104, 3 Anil Krishna Biswas—Dacca. / Ajit Kumar Sarkar—Pabna
50 Gobinda Kumar Das—Burdwan.
94, 12 Satinath Bhattacharjee—Dacca. / Mohitosh Kumar Mundal—Pabna.
47 Monoranjan Khan (*a*)—Rajshahi.
89, 28 Sudhamoy Roy Choudhury—Dacca. / Ramanath Mazumdar—Rajshahi.
83 Sudhamoy Mukherjee—Dacca.
132 Chitta Ranjan Guha Raja (*a*)—Dacca.
43, 105 Purnendu Nath Chakravortti (*a*)—Rajshahi / Sabdar Ali Ahammud—Dacca.
120, 42 Sunil Chandra Gangopadhyay—Dacca. / Tara Prasanna Mitra (*a*)—Rajshahi.
57, 78 Gouranga Dass Ponda—Burdwan. / Anwar Ullah—Dacca
116, 35 Sukumar Chandra Sen—Dacca. / Birendra Chandra Bagchi—Rajshahi
136 Md. Jamu Hussain (*a*)—Dacca.
44, 58 Khagendra Nath Kundu (*a*)—Rajshahi. / Murari Mohan Haldar—Burdwan.
119 Phanindra Nath Biswas—Dacca.
139 Shekh Akbar Ali (*a*)—Dacca
137, 112 Md. Aktar-Azzaman (*a*)—Dacca / Seraj Uddin Ahmad—Dacca.
5, 26, 138 Bibhuti Bhusan Roy—Pabna / Manindra Kumar Chakrabarti—Rajshahi. / Mokhleser Rahman (*a*)—Dacca.
29 Mohammad Shamsuzzoha—Rajshahi.
45 Naresh Narayan Biswas (*a*)—Rajshahi.
13 Nagendra Nath Sarkar—Pabna.
141 Md Abdul Quadir (*a*)—Dacca
87 Md. Karamat Ali—Dacca.
84 Anil Kumar Basu—Dacca.
77 Amjad Ali Ahmad—Dacca.
102 Dhirendra Kumar Ghose—Dacca.
114 Chandi Charan Sarker—Dacca.
7 Dhirendra Nath Kar—Pabna.
71 Barun Kumar Das Gupta—Dacca.
113 Biswendu Kumar Das—Dacca.
41 Nibaran Chandra Mani (*a*)—Rajshahi.
46 Shudhindra Narayan Dam (*a*)—Rajshahi.
135 Nani Gopal Sen Gupta (*a*)—Dacca.
72 Krishnadhan Nandy—Dacca.

A. N. SEN, *Secretary*,
Overseer Examination Board, Bengal.

Rajshahi College, Rajshahi.

Rajshahi College, the 20th May 1936.

Re-opens on Wednesday, the 1st July 1936.

1. Affiliations:—

B. A.—English, Bengali, History, Philosophy, Mathematics, Economics, Sanskrit, Arabic and Persian, Honours in all subjects except Bengali and Persian.

B. Sc.—Physics, Chemistry, Mathematics. Honours in all subjects.

I. A.—English, Bengali, History, Sanskrit, Logic, Mathematics, Persian, Arabic, Civics, Botany.

I. Sc.—English, Bengali, Mathematics, Physics, Chemistry, Botany.

2. Girl students are admitted to all classes.

3. The following medals and prizes are awarded every year:—

(*i*) The Lalit Mohon Gold Medal to the student who stands highest on the History Honours list at the B. A. from Rajshahi College.

(*ii*) Four Mohini Mohon Ray Prizes, two of the value of Rs. 80 each, and two of the value of Rs. 25 each, to the students who obtain the highest and the next highest marks respectively at the B. A. and B. Sc. Honours Examinations from the Rajshahi College; and

(*iii*) A Rani Monmohini Silver Medal to the most successful student from the Rajshahi College on the combined results of the I. A. and I. Sc. University Examinations.

4. In addition to a number of half-free studentships the College awards every year the following scholarships and stipends, each of which is tenable for two consecutive sessions:—

(A) To third year students.

One K. C. Sarkar Scholarship of Rs. 15 a month.

One Rani Monmohini Scholarship of Rs. 10 a month.

Two Rani Monmohini Scholarships of Rs. 8 a month.

One Rajshahi College Scholarship of Rs. 5 a month.

One Mayo Memorial Scholarship of Rs. 4 a month.

Two Mohsin Stipends of Rs. 5 a month each.

(B) To first year students.

One Rani Monmohini Scholarship of Rs. 8 a month.

Two Mohsin Stipends of Rs. 5 a month each.

5. There are commodious and well-equipped, two-storied Government hostels both for Hindus and Muhammadans. Hostel charges payable every month total Rs. 13 for Hindus and Rs. 12 for Muslims. Besides an excellent gymnasium, the College has arrangements for almost all popular games and physical exercises including rowing, water polo and swimming.

6. The scale of monthly tuition fees is Rs. 6 for I. A. and B. A. (Pass or Honours), Rs. 7 for I. Sc and Rs. 8 for B. Sc. students. The science laboratories are well-appointed and the College has its own power house and electric installation.

7. Twenty-five per cent. of the vacancies in each class will be reserved for Mahomedan students, if necessary; but this reservation will not hold good if sufficient applications are not received at least one week before the day on which the College re-opens.

8. Applications for admission should be made in the prescribed form immediately after the publication of the University results.

Admission forms and prospectus can be had from the College office on personal application or by sending a postage stamp of nine pies. Students who failed in the University Examination and desire re-admission should attach the University Admit Card and their Crossed list to their application.

H. GANGULI, *Professor-in-charge.*

Admission to the Compounders' Class, Ronaldshay Medical School, Burdwan—Session 1936-37.

Burdwan, the 26th June 1936.

Applications for admission to the Compounders' class of the Ronaldshay Medical School, Burdwan, will be received up to the 10th August 1936, except on Sundays and public holidays.

Applications should be supported by—

(*a*) A true copy of certificate of passing the Matriculation or its accepted equivalent examination.

(*b*) A testimonial of good moral character from a gazetted officer or a gentleman of equal position or from the Principal or Head Master of the college or school in which the candidate last studied. (Where more than six weeks have elapsed between the date of leaving college or school and the date of application for admission, a second certificate of character is required covering the intervening period. This should be obtained from a gazetted officer or a gentleman of equal position such as an Honorary Magistrate having an intimate knowledge of the applicant.)

(c) A certificate of age—Matriculation certificate or a certificate from the head of the institution in which the candidate last studied will also be accepted as evidence of age.

Applications from the candidates must reach the office of the Superintendent on or before the 10th August 1936 for registration of their names and they must attend for personal interview on Tuesday, the 25th August 1936, at 11 a.m., at the office of the Superintendent, Ronaldshay Medical School, Burdwan, together with the original certificates.

Late or incomplete applications will not be considered.

Note.—Every male student who is selected for admission shall pay an entrance fee of Rs. 4 and first half-yearly instalment of Rs. 12 tuition fee. He shall also pay the amount of sports and athletic club fee of Rs. 2. The session will begin from 1st September 1936.

*E. H. LOSSING, CAPTAIN, I.M.S., *Supdt., Ronaldshay Medical School, Burdwan.*

University of Dacca.

NOTIFICATION.

University Buildings, Ramna, Dacca, the 1st June 1936.

Admission for the session 1936-37 in the Faculties of Arts (including Commerce), Science and Law will commence on 2nd July 1936. Candidates for admission must interview the Provost concerned, not later than the 21st July 1936 or three weeks after the date of publication of the results of the qualifying examination passed by the candidates in question, whichever is later. The Admission Committee may however at their discretion grant exceptions to this rule and may impose such fines for lateness as they deem fit. Class fee for undergraduate students (other than those reading for Honours in Physics and Chemistry) and Law students Rs. 8 per mensem; for undergraduate students reading for Honours in Physics or Chemistry, Special Honours in Physics and Mathematics, for M.A. students and M.Sc. students' in Mathematics Rs. 10 per mensem; for M.Sc. students in Physics and Chemistry Rs. 12 per mensem. Seat rent in halls from Rs. 2 to Rs. 4 and total minimum cost of tuition and living from Rs. 22 to Rs. 25 a month. The University has up to date laboratories (including an experimental Psychology Laboratory), an excellent library and an organised tutorial system. It possesses splendid residential facilities and strong students' unions and offers exceptional opportunities for athletics.

2. There are certain facilities for women students. Conveyance by bus is available for the intending women students.

3. Special facilities are given to poor students of backward communities by way of rent-free seats, special stipends and remission of part of examination fees.

4. There is a special Honours Course in Physics and Mathematics with no subsidiary subjects. This course provides opportunity for a special study of theoretical Physics from the Mathematical point of view. Provision has also been made for the teaching of Bio-Chemistry in the Honours Course of Chemistry.

5. Further particulars regarding admission will be sent post-free on application to the Registrar.

N. AHMAD, *Registrar.*

Burdwan Division.

Chinsura, the 6th June 1936.

Applications are invited for admission into the panel of candidates for the posts of English teachers in Government High and Normal Schools and in Madrasahs as well as for the posts of Sub-Inspectors of Schools in the scale of Rs. 75—8/2—115—5/2—135—10/2—175 in the Subordinate Educational Service for the year 1936-37.

2. Only graduates preferably with an Honours degree, possessing a degree or diploma in teaching or first class M.A. or M.Sc. in *subjects useful for school work* shall be eligible for inclusion in the panel.

3. The candidates must not exceed 25 years of age on 1st August 1936 unless they have full two years' teaching experience or have worked as Sub-Inspector of Schools for two years. In that case the age-limit may be relaxed up to 30 years. They must be residents of the Burdwan Division and British subjects.

4. No candidate shall apply simultaneously to more than one Inspector of Schools.

5. The applications should be submitted in duplicate in the prescribed form as given below (schedule II) and be accompanied by the original Matriculation and other University certificates and diplomas as well as any other certificates relating to the attainments and character of the candidates.

6. Every candidate shall furnish certificates written not more than one year prior to the date of application from two responsible persons unconnected with his College or University and not related to him, testifying to his private character.

7. No person shall be eligible for appointment who is not of sound mind, good physique and active habits and free from organic defects.

8. No person shall be eligible for appointment who has endeavoured to enlist for his candidature the support of persons of influence or of officials of Government. Spontaneous recommendations from persons interested in, or otherwise known to, the candidate shall be disregarded.

9. The candidates whose names have already been empanelled are required to renew their application for retention of their names in the panel to be considered again, failing which their names will be automatically removed from the panel.

10. The applications will be received by the undersigned on or before 31st July 1936.

K. C. RAY,

Inspector of Schools, Burdwan Division.

Schedule II.

Education Department.

Forms of application for appointment to posts of English teacher and Sub-Inspector of Schools in the scale of Rs. 75- 8/2- 115-- 5/2 -135—10/2 175 in the Subordinate Educational Service.

(1) Name of applicant and present address (in full).

(2) Permanent address in full.

(3) Date of birth and age last birthday.

(4) Place of birth and permanent residence.

(5) Nationality at birth, religion and caste.

(6) Father's name, place of birth and nationality at birth.

(7) Father's address and profession (if dead, give address at date of death).

(8) Mother's place of birth and nationality at birth.

(9) Name of school last attended before entering University, giving address, with dates of entering and leaving.

(10) Name of University and College. Give dates of entering and leaving, and dates of passing examinations. State subjects studied, degrees, honours or prizes obtained and class and position in the class obtained at all University and other public examinations.

(11) Name of the Training College attended. Give year and class of the B. T. degree and the subject in which you specialised during training.

(12) Give details of any original work. If published, copies of the publication should be attached.

(13) Give details of any teaching experience with dates, and names of institutions. Any testimonials as to your ability as a lecturer, teacher, etc., should be attached.

(14) Give names of games played —

(*a*) at school,

(*b*) at college, and

(*c*) after leaving the college.

State whether you have had experience in organising games.

(15) State whether you are a trained Scout Master if, so, what troops you have been in charge of and where.

(16) Name two persons of position (with address in full) who can, if necessary, testify to your character, and to accuracy of your statements.

(17) If the time since leaving the school is not fully accounted for by replies given above, account for the remainder here with dates.

(18) Are you free from pecuniary embarrassments ? If you are under liability to repay money advanced by an institution or party for your education, state the particulars.

(19) Have you ever been pronounced unfit at any time for Government employment by the Medical Board or any other duly constituted medical authority in Bengal ? What serious illness have you suffered from since leaving the school ?

(20) Have you appeared at any examination for Government service ? If so, state when and for what appointment. With what result?

(21) Have you previously been rejected for any appointment in Government service ? If so, when and for what reason ?

(22) Are you willing to be appointed to any post temporarily vacant ?

(23) Indicate the class of post you prefer, *i.e.*, an English teachership or Sub-Inspectorship or both.

(24) State here any facts not recorded above which should be mentioned as supporting you suitability for appointment.

(*Signature*) .....

(*Date*) .....

Orders by the Vice-Chancellor and Syndicate of the Calcutta University.

NOTIFICATION No. Misc. R. 16.

Senate House, the 29th June 1936.

The following changes in Chapters XXXIII and XXXVII of the Regulations relating to M.A. and M.Sc. Examinations in Applied Mathematics sanctioned by the Government of Bengal, Education Department (Ministry of Education), are notified for general information :—

(1) That in Chapters XXXIII and XXXVII of the University Regulations the words "Mixed Mathematics" be replaced by the words "Applied Mathematics" wherever they occur.

CHAPTER XXXVII.

(2) That the first two paragraphs of Section 6, Chapter XXXVII (page 347 of the Edition of 1935) be replaced by the following :

"There shall be a practical examination in all subjects other than Pure Mathematics, and candidates in all subjects other than Applied Mathematics shall be required to pass in the practical portion of the examination as well as in the theoretical portion defined in the syllabuses.

In Pure Mathematics there shall be eight papers of 4 hours each, each carrying 100 marks. In Applied Mathematics there shall be eight full papers carrying total marks of 800 distributed as shown in the syllabus."

(3) That the entire syllabus for Mixed Mathematics (pages 348-49 of the Edition of 1935) beginning from the sentence "The subjects in Mixed Mathematics shall be as follows :- " to the portion ending with the sentence "One four hour paper shall be set upon.....additional subject," be replaced by the following :-

"Candidates in Applied Mathematics shall be expected to possess a sound general knowledge of a number of compulsory subjects and a detailed knowledge of selected topics as indicated below :-

1-4. Four theoretical papers of 4 hours each, each carrying 100 marks :-

(*a*) General Mechanics	..	..	..	2 papers.
(*b*) Hydromechanics	..	..	..	1 paper.
(*c*) Analysis and Differential Equations		..	..	1 paper.

5. One theoretical half paper of 2½ hours carrying 50 marks and another half paper comprising a practical examination carrying 50 marks in the Theory and Practice of Numerical Calculations including Combination of Observations. The two half papers together shall constitute one full paper.

6. One theoretical paper of 4 hours carrying 100 marks in two subjects to be selected by the candidates from a number of subjects prescribed by the Board of Higher Studies in Applied Mathematics.

Appended is a list of such subjects which may be added to or modified from time to time by the Board :-

(*a*) Theory of Potential

(*b*) Spherical Astronomy.

(*c*) Elements of the Theory of Electricity.

(*d*) Elements of the Theory of Thermodynamics.

7-8. Two papers in one subject to be selected by the candidates from the following list which may be added to or modified from time to time by the Board of Higher Studies in Applied Mathematics.

(*a*) Mathematical Theory of Elasticity	Two papers of 4 hours each, each carrying 100 marks.
(*b*) Electricity and Magnetism	
(*c*) Advanced Hydromechanics	
(*d*) Geodesy and Geophysics	
(*e*) Advanced Dynamics	
(*f*) Celestial Mechanics	
(*g*) Statistical Mechanics and Thermodynamics	
(*h*) Quantum Mechanics and Wave Mechanics	
(*i*) Theory of Relativity	

(*j*) Probability and Mathematical Statistics (one theoretical paper of 4 hours carrying 100 marks, one theoretical half paper of 2½ hours carrying 50 marks and another half paper comprising a practical examination carrying 50 marks, the two half papers together shall constitute one full paper)."

(4) That in Section 8, Clause (*a*) (page 362 of theEdition of 1935) the words "and Mixed Mathematics" be deleted.

(5) That Section 8, Clause (*b*) be renumbered as Section (*c*), and that the following paragraph be inserted as Section 8 (*b*) after Section 8 (*a*):—

"8 (*b*). In order to pass in Applied Mathematics a candidate must obtain 288 marks. No minimum pass marks shall be required in each paper, but if in any paper a candidate obtains less than 25 marks those marks shall not be included in the aggregate, provided, however, that if any candidate obtains not less than 30 per cent. of the marks in the Practical portion of the examination in a paper, all marks in that paper shall be included in the aggregate. Candidates obtaining 360 marks shall be placed in the second class and those obtaining 480 marks in the first class."

CHAPTER XXXIII.

(6) That Section (6) of Chapter XXXIII (page 234 of the Edition of 1935) be modified to read as follows :—

"In each of the subjects I to XIV there shall be eight papers of 4 hours each, each carrying 100 marks."

"In each of the subjects XV to XXIII the papers and the marks shall be distributed as laid down in the Regulations for the M.Sc. Examination."

(7) That the expression "I to XVA" in Section 1 (*a*) under the head General (page 264 of the Edition of 1935) be replaced by "1 to XIV-A."

(8) That Section 1 (*b*) under the head General be altered to read as follows :—

"(1) In order to pass the subjects XV to XXIII a candidate must conform to the rules laid down in the Regulations for the M.Sc. Examination."

The revised regulations will come into operation with effect from the M.A. and M.Sc. Examinations to be held in 1938.

J. CHAKRAVORTI, *Registrar.*

Orders by the Vice-Chancellor and Syndicate of the Calcutta University.

Senate House, the 5th July 1936.

NOTIFICATION No. T/R 444.

List of Apparatus for Practical Works in Chemistry.

The list as given in Appendix B to the Regulations is replaced by the following revised list :-

CHEMISTRY.

A—INTERMEDIATE STANDARD.

List of apparatus for 20 students, working in pairs.

	Quantity.
Aspirator, 10 litre capacity	2
Balance, with agate knife edges and planes, graduated beam, beam support, thick glass vessel, double hook and polished mahogany stool for specific gravity experiments, to carry 250 gms. sensitive to 1 mg.	4
Analytical weights, ·001 to 100 gms.	4 sets.
Dispensing scales with weights	1
Basin, evaporating, Royal Berlin	1 doz.
Porcelain with spout, capacity 80 cc.	
Ditto Ditto 100 cc.	2 doz.
Ditto Ditto 300 cc.	1 doz.
Sand bath, deep, diam. 10 cm.	1 doz.
Steam bath (to be made locally)	
Beakers, Bohemian glass, without lip, capacity 90 cc. ..	1 doz.
Ditto Ditto Ditto 140 cc.	2 doz.
Beaker, Jena glass, No. 2, capacity 500 cc.	1 doz.
Ditto Ditto 6, capacity 150 cc. ..	1 doz.
Foot blower, size No. 3	2
Extra rubber disc for No. 3	4
Extra nets	2
Blowpipe, Universal, with ball socket movement	2
Mouth Blowpipe, Nickel-plated	1 doz.
Bottles, best Bohemian glass -	
N. M., without stopper, 150 cc.	6 doz.
N. M., flat stoppered, for reagents with carefully ground stoppers, capacity 60 cc.	6 doz.
N. M., flat stoppered, for reagents with carefully ground stoppers, capacity 150 cc.	1 gross
N. M., flat stoppered, for reagents with carefully ground stoppers, capacity 250 cc.	2 gross
Bottles, W. M., flat stoppered, capacity 60 cc.	6 doz.
Ditto Ditto 225 cc ..	6 doz.
Woulff's bottles with two necks, one in centre and one on shoulder, capacity 250 cc.	2 doz.
Burettes with stopcocks (c. form), lateral, normal calibrated 50 cc -1-10	1 doz.
Bunsen burner with air regulator, diam. 1 cm.	2 doz.
Star support for the above	1 doz.
Chimney, conical for the above	1 doz.
Blowpipe jet for the above	1 doz.
Bench light burners for bending glass tubes	6
Fletcher's safety, Bunsen, No. 10	3
Cylindrical cans for boiling water, Condensers, Liebig's, inner tube fitted with I. R. cork, 40 cm.	½ doz
Connectors, double (for batteries)	2 doz.
Corks, finest quality, 23-25 mm. long, 2 mm. taper, diam. of top 16 mm.	6 doz.
Corks finest quality, 23 25 mm. long, 2 mm taper, diam. of top 20 mm.	1 gross
Corks, finest quality, 32 mm long, head measure 30 mm ..	1 gross
Ditto Ditto Ditto 40 mm. ..	4 doz.
Ditto Ditto Ditto 50 mm ..	2 doz.

	Quantity.
Corks, India Rubber, best quality, red—	
Size 1, diam. of bottom 13 mm., top 16 mm.	2 doz.
Size 3-A Ditto 25 mm., top 29 mm.	2 doz.
Size 5 Ditto 29 mm., top 35 mm.	2 doz.
Cork borers, of brass tube with rod, nickel-plated, in sets of 3 ..	1 doz. sets
Cork borers, of brass tube with rod, nickel-plated, in sets of 12	2 sets
Corkpressers, cast iron, heavy 25 cm. long	2
Covers for beakers, concave (clock glass), diam. 7½ cm. ..	2 doz.
Crucibles, Berlin porcelain, with cover, No. 0, 14 cc. ..	2 doz.
Crystallizing dishes, flat bottom, with spout, 5 cm. deep, 10 cm. diam.	2 doz.
Desiccators, Scheibler's with ground glass cover, 15 cm. diam. of top	4
Desiccator discs, perforated circles of Berlin porcelain to fit above, 11 cm.	4
Files, round, 13 cm. long, without handles	1 doz.
Files, triangular, 13 cm. long, without handles	1 doz.
Filter discs, perforated, Berlin porcelain, for use in funnels, true circular, 64 mm. diam.	4
Filter papers, Schleicher and Schull, cut circular, No. 595 for qualitative work, diam. 9 cm.	1,000
Filter papers, Schleicher and Schull, cut circular, No. 595 for qualitative work, diam. 11 cm.	1,000
Flasks, Bohemian, flat bottom, capacity 200 cc. ..	1 doz.
Ditto ditto ditto 500 cc. ..	2 doz.
Ditto round bottom, ditto 200 cc. ..	1 doz.
Ditto ditto Jena glass, short neck. 500 cc.	1 doz.
Flasks with side tube from neck, straight 200 cc. ..	1 doz.
Flasks, Jena glass, conical, Erlenmeyer's, capacity 200 cc. ..	1 doz.
Measuring flasks, standard, gauged at one mark, stoppered neck, 250 cc.	1 doz.
Measuring flasks, standard, gauged at one mark, stoppered neck, 1,000 cc.	1 doz.
Funnels, Bohemian glass, with ground edges, sides inclined at 60 degrees plain, diam. 6 cm.	1 doz.
Funnels Bohemian glass, with ground edges, sides inclined at 60 degrees plain, diam. 8 cm.	1 doz.
Funnels, Bohemian glass, with ground edges, sides inclined at 60 degrees, plain, diam. 19 cm.	4 doz.
Funnels, Bohemian glass, with ground edges, sides inclined at 60 degrees, ribbed, 8 cm.	6
Safety funnels with long tube for fitting up glass flasks, etc., thistle head, 32 cm. long	1 doz.
Safety funnels, with long tube, etc., with bend and one bulb thistle, 30 cm.	½ doz.
Gas jars, cylindrical with ground flange, Bohemian glass, 21 × 4 cm.	1 doz.
Gas jars, cylindrical with ground flange, Bohemian glass, 32 × 5 cm.	1 doz.
Ground glass, disc. diam. 5 cm.	1 doz.
Ditto ditto 6 cm.	1 doz.
Graduated gas jar with spout on glass foot, scale descending, capacity 100 cc.	4
Graduated gas jar with spout on glass foot, scale descending, capacity 500 cc.	4
Kipp's apparatus, bulb 100 cm. diam.	3
Magnets	2
Mortars and Pestles	12
Ditto iron	1
Pinch Cocks	12
Pipettes, 5 cc.	12
,, 10 cc.	12
,, 25 cc.	12
Platinum foil, ·01 mm. thick	5 gms.
Platinum wire, 25 mm.	5 gms.
Pliers, steel	2
Apparatus for showing diffusion	1 set
Retorts, 70 cc.	1 doz.
,, 150 cc.	1 doz.
Retort stand	12
Clamps for flasks	12
Glass rods	¼ kgm.

	Quantity.
Boxwood rulers	2
Deflagrating spoons	12
Iron spoon for burning phosphorus	6
Test tube, thin glass	4 gross.
Boiling tubes	4 doz.
Test tube brushes	12
Test tube stands	12
Thermometers up to 200° C.	6
Ditto 360° C.	6
Crucible tongs	1 doz.
Graduated tubes	12
Pneumatic troughs	1 doz.
Glass tubing	3 kgm.
Hard glass tubing	1 kgm.
Jena glass combustion tubes	2 kgm.
I. R. tubing, best, int. diam. 4 mm.	12 yds.
Ditto ditto 10 mm.	24 yds.
Watch-glass	2 doz.

To be purchased locally.

Wire gauze, iron, 40 holes to an inch.	
,, copper, 40 holes to an inch.	
Wire, iron.	
Wire, copper.	
Tripods	1 doz.
CaCl tubes	1 doz.

Approximate cost, Rs. 900.

Reagents for practical class of 20 students.

Approximate minimum cost, Rs. 150 (one year's supply).

List of Chemical Apparatus for Lecture Work, Intermediate Examination.

	Approximate quantity required.
Evaporating Basin of aluminium, fig. 3, strong, polished, pure	
10 cm. diam. with spout	1
Ditto of "R" resistance glass with spout, 70 mm. diam. ..	6
Ditto Royal Berlin Porcelain with spout, glazed inside and out	
No. 00 capacity 50 cc.	6
,, 1 ,, 100 cc.	6
,, 2 ,, 140 cc.	6
,, 4 ,, 200 cc.	6
Ditto glazed inside and partially outside	
No. 5 capacity 300 cc.	3
,, 6a ,, 535 cc.	2
,, 7 ,, 765 cc.	2
Beakers, Bohemian glass, without spout	
No. 0 capacity 50 ccm.	6
,, 1 ,, 90 ccm.	6
,, 2 ,, 140 ccm.	6
,, 3 ,, 200 ccm.	6
,, 4 ,, 325 ccm.	6
,, 0 2 litres capacity	2
Beakers of resistance, "R" glass, wide shape, with spout	
No. 1 capacity 150 cc.	6
,, 2 ,, 200 cc.	6
,, 3 ,, 300 cc.	6
,, 4 ,, 500 cc.	6
,, 5 ,, 750 cc.	6
,, 6 ,, 1,000 cc.	3

	Approximate quantity required.
Covers for Beakers, gas jars, etc., ground one side glass circle—	
Diam. 5 cm.	3 doz.
,, 7½ cm.	3 doz.
,, 10 cm.	3 doz.
Ditto with hole in centre—	
Diam. 7½ cm.	1 doz.
,, 10 cm.	6 doz.
Ditto, concave (clock glasses)—	
Diam. 6½ cm.	2 doz.
,, 9 cm.	1 doz.
Tripods, with circular top and iron legs—	
Height 15 cm.	6
,, 18 cm.	6
Sand bath dishes, shallow, stout, sheet iron, flat bottom, 10 cm. diam.	3
Asbestos mill board, thickness of sheet $\frac{1}{16}$ in., weight per sheet 40 × 40 in., 4 lbs.	4 lbs.
Asbestos yarn ¼ in., diam.	1 lb.
Batswing burner, height 30 cm.	2
Flat flame Bunsen burners, for bending glass and heating tubes, length of opening at the mouth 15 cm.	1
Bunsen gas burner with air regulation	6
Rosetop for ditto ditto ..	3
Star support for chimneys	4
Iron chimneys, conical	4
Blowpipe jets	4
Teclu gas burner, large size	2
Head, Fig. A. to fit ditto	2
,, Fig. B. to fit ditto	2
,, Fig. C. to fit ditto	2
Chimney with clamping screw	2
Fletcher's safety Bunsen, No. 5	2
Spirit lamps with extra neck, capacity 120 cc.	6
Flasks, Bohemian, flat bottom	1 doz.
Capacity 75 cm.	1 doz.
,, 175 cm.	1 doz.
,, 250 cm.	1 doz.
,, 400 cm.	1 doz.
,, 500 cm.	1 doz.
,, 750 cm.	1 doz
,, 3 litres	4
Flasks, 500 cc.	6
Flasks, of " R " resistance glass—	
Shape D, capacity 75 cc.	1 doz.
,, ,, 250 cc.	1 doz.
,, ,, 500 cc.	1 doz.
,, ,, 750 cc.	6
,, ,, 1,000 cc.	4
,, ,, 1,500 cc.	3
Shape D, of extra hard glass for preparing Oxygen round bottom—	
Capacity 150 cc.	1 doz.
Capacity 250 cc.	6
Flasks of " R " resistance glass, Erlenmeyer's, capacity 200 cc.	6
Bolt head flask, 3000 cc. capacity	2

	Approximate quantity required.
Retorts, stoppered, etc.—	
Capacity 150 cc.	1 doz.
,, 250 cc.	1 doz.
Receivers, with three necks, capacity 3 litres	2
Retorts, without tubulure and stopper, capacity 250 cc. ..	6
Ditto ditto capacity 500 cc. ..	6
Retorts with tubulure for cork—	
Capacity 250 cc.	6
,, 500 cc.	3
Gas-generating apparatus, 40 cm. long	2
Gasholder, 25 litres capacity	1
Retort stands, 24 in. long	6
Clamp, of malleable iron	6
Leibig's condenser, glass jacket and tube and length of body 60 cm.	6
Leibig's condenser, glass jacket and tube and length of body 80 cm.	2
Condensation tube, U-tube, 30 cm. long	2
Condenser stand	2
Funnels, glass sides, inclined at 60, plain—	
Diam. 5 cm.	1 doz.
,, 7½ cm.	1 doz.
,, 10 cm.	1 doz.
,, 15 cm.	3
Ditto ribbed, 10 cm.	6
Condenser with one tubulure and worm, length of jacket 25 cm. diam. 7½	2
Funnels separating	
Capacity 60	6
,, 100	6
Glass tubing for bending, Nos. 2, 3 and 5	4 kg.
Ditto No. 11	5 kg.
Combustion tubing, best Bohemian, 6 to 10 mm. diam. Nos. 2 to 6, assorted	2 lb.
Jena combustion tube, 12 to 25 mm. outside diam. assorted ..	4 lb.
Glass cutting tools, set of 12, semi-circular	1 set.
Set of glass-blower's tools	1 set.
Files, round, 10 cm. long, without handle .. .	6
Files, triangular, 10 cm.	3
Rasps, half-round, 15 cm.	2
Flat files, 15 cm.	2
Corks, 23-25 mm. long, 2 mm. taper, diam. of top 29 mm. ..	6 doz.
,, 32 mm. ,, 2 mm., head measure 30 mm. .	3 doz.
,, 32 mm. ,, 2 mm. ,, 40 mm ..	3 doz.
,, 32 mm. ,, 2 mm ,, 50 mm. .	3 doz.
,, India rubber, red, size 1, diam. of bottom 13 mm., top 16 mm.	2 doz.
,, 3a Ditto 26 ditto 29	2 doz.
,, 4 Ditto 29 ditto 33	2 doz.
Cork borers in sets of 12	1 set
Cork presser, wheel pattern	1
Cork borer sharpener for No. 983	1
Tubing, best India rubber, red, int. diam. 4 mm. .. .	12 yds.
Ditto ditto ditto 10 cm. .	12 yds.
Universal blowpipe	1
Footblower, size No. 3	1
Mouth blow pipe, nickel-plated ..	2
Platinum foil, 0·3 mm. thick, 100 sq. 1 cm., weighing 5 gms ..	10 gms.
Platinum wire, 25 mm. diam. 1 metre .. .	6 gms.
Steel hammers, 15 mm., square face	2
Anvils	2
Horseshoe magnets, 20 cm. long	1
Mortars and Pestles, diam. 8 cm.	3
Ditto ditto 15 cm. . ..	2
Ditto, iron, bowlshape, diam. 5 in. .. .	1
Forceps	2

	Approximate quantity required.
Crucibles, Royal Berlin porcelain, with cover—	
No. 1, 25 cc.	3
No. 3, 80 cc.	3
Tongs, 15 cm. long	3
,, for picking up mercury	1
,, 61 cm. long.	1
Spatulas, 15 cm. long	4
,, 20 cm. ,, ...	2
Pliers, steel and 6 in. long	2
Scissors, 6 in. long	1 pair
Watchmaker's vice	1
Watch glass clips, diam. 10 mm.	2
Bottles, 125 cc., N. M., with stoppers	3 doz.
,, 250 cc. Do. Do.	3 doz.
,, 300 cc. Do. Do.	2 doz.
,, 750 cc. Do. Do.	1 doz.
Bottle's cap 2 oz., N. M., with stoppers	3 doz.
Ditto 6 oz.	3 doz.
Ditto 12 oz.	2 doz.
Ditto 20 oz.	1 doz.
Bottle's W. M., flat-stoppered, cap 4 oz.	2 doz.
Ditto ditto ditto 8 oz.	2 doz.
Ditto ditto ditto 10 oz.	1 doz.
Specimen bottles, diam. 6 cm., int. diam. 4 cm.	2 doz.
Jars, cylindrical, etc., 15 cm. high	1 doz.
Ditto 4, etc., 20 cm.	1 doz.
Ditto 5, etc., 30 cm.	1 doz.
Ditto 6½, etc., 40 cm.	6
Jars, graduated, cap. 200 cc.	2
Gas jars, 500 cc. cap.	2
Bell jars, cap, 2 litres	3
Deflagrating jars, 10 cm. diam.	2
Ditto globes, diam. 30 cm.	2
Detonating bottle	2
Balloons, collodion, cap. 800 cc.	1 doz.
Ditto ditto 1,500 c.c.	6
Deflagrating spoons with brass cap	6
Iron spoons for burning P or S	4
Deflagrating stands	2
Pneumatic trough, length 36 cm.	1
,, ,, circular, 16 cm. deep	1
Beehive shelves, diam. 10 cm.	1
Pneumatic trough, porcelain, 18 cm. long	1
,, trough, 50 cm. long	1
Funnels, long neck, 30 cm. long	1 doz.
Ditto ditto, 46 ditto	6
Funnels, safety, medium	6
Kipp's apparatus, 1 litre cap.	4
Chlordie of calcium tube, 20 cm. long	6
U-shaped, length of limb 16 mm., diam. of limb 15 cm. ..	6
U-shaped, 15 cm. long ,, 20 mm. diam. ,, 15 cm. diam.	6
Chloride of calcium jars, height 25 cm.	6
Absorption tubes, Babo's	2
Gas Washing bottle, cap. 150 cc.	6
Eudiometer, 40 cm. long	2
Bunsen's gas voltameter	1
Gas tubes sealed at one end, cap. 50 ccm. in 1/10	2
,, glass stop-cock at top 50 ccm. 1/5	2
Schroedter's apparatus	1
Aspirators, 4 litres cap.	2
Set of four burners, etc.	1
Ramsay's tube heater with burner	1
Erlenmeyer's combustion furnace (15 burners)	1

	Approximate quantity required.
Standard delivery pipettes-	
1 cc.	2
2 cc.	2
5 cc.	2
10 cc.	2
25 cc.	2
50 cc.	2
Standard flasks with one mark, 250 cc., with stopper ..	2
„ „ „ 500 cc. ..	2
With spout, 200 cc.	1
Normal burettes with stop-cock, 50 by 1/10 cc.	2
„ for pinch cock, 50 by 1/10 cc. ..	2
Burette floats	4
Burette stands, iron	1
Burette clips, No. 3, 18 mm.	1 doz.
Specific gravity flasks, 25 gms.	2
„ tube, Sprengel's, 10 gms.	2
Hydrometers	
Normal Thermometers from 0 to 100	3
Ditto ditto 0 to 360	2
Vacuum desiccator, inside diam. 14 cm.	1
Desiccators, Hempel's, diam. 10 cm.	1
Ditto ditto 10 cm.	1
Brass syringe for exhausting and condensing, length of barrel 13 cm., diam. 2½ cm.	1
Bell glass receiver, int. height 20 cm., outside diam 18 cm. ..	2
Davy's No. 4 Safety lamp	1
Glass stop-cocks, bore 2 mm.	6
Test tube, int. diam. ½", 10 cm. long . ..	1 gross.
Ditto, int. diam. ⅝", 10 cm.	6 doz.
Ditto, 6 in. long, 1 in. diam.	3 doz.
Test tube holders, cork-lined, No. 1	2
Test tube of hardest combustion glass, 50 mm. by 10 mm. ..	2 doz.
Ditto ditto ditto 75 by 13	2 doz.
Test tube, int. diam. ½" 10 cm. long	1 gross.
Ditto, int. diam. ⅝" 10 cm.	6 doz.
Ditto, 6 in. long. 1 in. diam.	3 doz.
Decomposition of water app., complete	1
Ozone apparatus (Siemen's, Brodie's or Newth's) . ..	1
Grove's battery, etc., of set six	1 set.
Connectors, double large, S. W. G.	1 doz.
Copper wire silk covered, double	1 lb.
Induction coils, Ruhmkorff's, with Ruhmkorff's commutator, length of spark 75 mm., No. 9	1
Apparatus to determine the proportion by vol. elementary gases contained in one vol. of HCl with metal stand	1
Apparatus for vol. analysis for ammonia by chlorine and hypobromite of sodium.	
Apparatus for determination of volumetric composition of NH_3 by sparking	1
Apparatus to demonstrate that H and Cl combine to form HCl without alteration of vol.	1
Apparatus to show that HCl is produced by the combination of one vol. of H with one of Cl	1
Apparatus to prove that water contains two vols. of H and one of O (both limbs graduated)	1
Apparatus for the decomposition of HCl, carbon electrodes ..	1
Iron stand for the above	1
Apparatus to illustrate the effect of pressure and temperature on gases, complete	1
Apparatus to illustrate that when H and O combine to form water, the vol. measured at 100 is reduced by ⅔	1
Iron Tripod for condenser	1
Stand	1
Apparatus for the decomposition steam by sparking ..	1
Apparatus to show that O has the same vol. as the CO_2 and SO_2 produced from it	2
Stands for the above	2
Apparatus for producing Nitric peroxide from air	2
Apparatus to show the phenomena of diffusion, complete with stand	1

	Approximate quantity required.
Apparatus for obtaining equal vols. of Cl. and H by electrolysis ..	1
Atomic weight chart	1
Woulff's bottles with two necks, 250 cap.	6
Ditto ditto 500 cap.	6
Apparatus for illustrating Boyle's Law	1
Cast iron bottles with screwed stopper for bursting when frozen.	
Schleicher and Chüll's No. 595 Filter paper in sheets of 47 by, 54 cm.	100
Ditto Circular No. 595, 7 cm. ..	500
Ditto ditto ditto, 9 cm. ..	500
Ditto ditto ditto, 11 cm. ..	500
Ditto ditto ditto, 24 cm. ..	250
Steam bath.	
Air bath.	
Sieves.	
Iron wire gauze.	

—Approximate cost (Rs. 1,300).

Reagents, etc., for Lecture room.

—Approximate cost, Rs. 200 (one year's supply).

B.—B.A. or B.Sc. STANDARD.

(*a*) *Practical* (*in addition to the Intermediate Standard Apparatus*).

Basins of lead with round bottom with spout 7½ cm. diam. ..	4	
Air bath.		
Steam bath.		
Crucibles, fire clay, triangular	12	
Covers for above	12	
Crucibles and cover of platinum	1	
Flask, Bohemian, flat bottom, cap. 200 cc.	6	
Kjeldahl flask, round bottom, long neck, cap. 300 cc. ..	2	
Conical flasks, 400 cc.	1	
Hot water funnels of copper with glass funnel	2	
Separating funnels	2	
Filter pumps	2	
Specific gravity flask with perforated stopper	3	
Pipe clay triangle	12	
$CaCl_2$ tube	12	
Barometer tubing	1	kg.
Will and Varrentrap's bulbs	2	
Combustion furnace	1	
Platinum crucible	1	

—Approximate cost, Rs. 300.

Reagents for practical class of 15 students.

—Approximate minimum cost, Rs. 350 (one year's supply).

(*b*) *List of Apparatus for Lecture Work* (*in addition to that for the Intermediate Standard*).

Nickel basin, 10 cm. diam. (weight 9 oz. Troy)	1
Platinum basin with spout, 70 cc. cap.	1
Water bath, enamelled iron, with tripod stand, diam. 16 cm. ..	1
Flasks, conical, Jena glass, Erlenmeyer's—	
cap. 200 cc.	6
cap. 300 cc.	6
Distillation flasks, 100 cc.	2
,, 250 cc.	3
,, 500 cc.	2
Fractional distillation tube with two bulbs	1
Ditto ditto 30 cm. long ..	1
Ditto ditto cap. ½ litre ..	3
Receivers with three necks, 1½ litre	3
Crucible and cover roses with gas leading tube	3
Ditto of platinum, cap. 35 ccm.	1
Crucible of copper with cover, diam. 8 cm. ..	2
Crucible of copper with cover, diam. 12 cm.	2

	Approximate quantity required.
Pipe clay triangles	1 doz.
Crucible, No. D. 10 cm. high	2
Covers for the above	2
Tongs, nickel-plated, 20 cm. long	4
„ for picking up mercury	1
Potash bulb, Geissler's	2
Ditto ditto	2
Ditto Will and Varrentrap's	2
Kjeldahl flasks, 300 ccm. cap.	3
Pear-shaped glass heads with safety trap	2
Nitrometer, Schiff's	1
Carius Furnace	1
Cupels of bonoash, 25 mm. diam.	3
Apparatus for superheated steam, length of body 80 cm. ..	1
Liebig's condensers, total length 105 cm.	2
Anschutz Thermometers, Nos. 1-5	1 set.
Beckmann's Thermometer, Range of Scale 6° in 1-100°C ..	1
Manometer	1
Standard Barometer	1
Dialysers, bellshaped glass, diam. 10 cm.	2
Dialysis paper, 21½	1 doz. sq.
Pfeffer's apparatus, cap. 150 cc.	1
Melting point apparatus	1
Apparatus for the preparation of acetylene from H and C ..	1
Acetylene gas apparatus	1
Vapour density bulbs, 400 cm. cap.	3
Dumas bath with holder	1
Vapour density apparatus, V. Meyer's	2
Small stoppered bottles	6
Outer bulb	2
Beckmann's depression of freezing point apparatus, complete set	1 set.
Beckmann's boiling point apparatus, with boiling flask ..	1
Steam jacket, porcelain.	
Thermometer o —2000 for giving the temperature of the steam bath	1
Spiral condensers	1 set.
Glass beads, etc.	1 set.
Stand with clamp and boss	2 sets.
Two Beckmann burners	1 set.
Ring burner head for these	1 set.
Lands Berger's molecular weight determination apparatus ..	1 set.
Thermo-regulator	1
Pocket Spectroscope, with comparison prism, illuminating mirror and adjustable slit	1
Spectrum tubes filled with Helium	1
Ditto ditto Argon	1
Solid formulæ models, etc.	1 set.
Stand for the above	2
Models, etc., complete set of 12 rubber-fittings, 48 coloured balls, etc.	1 set.
Copper gauze, 19 holes to an inch	2 sq. ft.
Filter paper washed with HCl and HF for quantitative work	
No. 589 (2) White ribbon 9 cm. ..	500
11 cm. ..	100
(3) Blue ribbon 9 cm. ..	100
11 cm. ..	100
(4) Yellow ribbon 9 cm. ..	200

—Approximate cost, Rs. 600.

Reagents, etc., for lecture work.

—Approximate cost, Rs. 300 (one year's supply).

C.—M.A. OR M.Sc. STANDARD.

An additional supply of organic and rare inorganic substances will be necessary.

—Approximate minimum cost, Rs. 1,000.

J. CHAKRAVARTI, *Registrar.*

Orders by the Vice-Chancellor and Syndicate of the Calcutta University.

Senate House, the 9th July 1936.

The undermentioned candidates are declared to have passed the B. Com. Examination held in April 1936 :—

FIRST DIVISION.

(In order of merit.)

Non-collegiate student (University B. Com. Class).

1 Gauri Shankar Newatia.

University B. Com. Class.

2 Ray, Amiyakumar.

Vidyasagar College.

3 Guha, Brajeschandra.
4 Bhattacharyya, Arabinda.
5 Madanlal Bhotica.
6 Chattopadhyay, Nilratan.
7 Suraj Bhan Khandelwal.

SECOND DIVISION.

(In alphabetical order.)

Non-collegiate student (Vidyasagar College).

A. R. Wariyar.

Non-collegiate student (University B. Com. Class).

B. Sanyasi Raju.

Vidyasagar College.

Baleshwar Singh.
Bandyopadhyay, Bijitendra.

Non-collegiate student (Vidyasagar College).

Bandyopadhyay, Chintaharan.

University B. Com. Class.

Bandyopadhyay, Debabrata.
„ Durgadas.

Vidyasagar College.

Bandyopadhyay, Gopeswar.
„ Kamalapati.
10 „ Kasitosh.
„ Nilmani.

Non-collegiate student (University B. Com. Class).

Bandyopadhyay, Sunilkumar.

Vidyasagar College.

Bandyopadhyay, Tinkari.
Basu, Dwijendramohan.
„ Hirendrakrishna.

Non-collegiate student (Roll Raj. N. I).

Basu, Mihir.

Vidyasagar College.

Basu, Rabindrakrishna.
„ Sudhindranath.

Non-collegiate student (Vidyasagar College).

Basdeva, Nandan.

Vidyasagar College.

20 Bhattacharyya, Debendranath.
„ Nilkantha.

University B. Com. Class.

Bhattacharyya, Nitischandra.

Vidyasagar College.

Biswas, Mrinalkumar.

Non-collegiate students (University B. Com. Class).

Biswas, Nripendrachandra.
„ Sudhansubhushan.

University B. Com. Class.

Chakrabarti, Animeshchandra.

Vidyasagar College.

Chakrabarti, Arunkanti.

Non-collegiate student (Vidyasagar College.)

Chakrabarti, Jagadischandra.

University B. Com. Class.

Chakrabarti, Madhabchandra.

Non-collegiate student (Vidyasagar College).

30 Chakrabarti, Niranjan.

University B. Com. Class.

Chakrabarti, Santoshkumar.

Non-collegiate student (University B. Com. Class).

Chattopadhyay, Anilkumar.

University B. Com. Class.

Chattopadhyay, Muktiskumar.

Non-collegiate student (University B. Com. Class).

Chattopadhyay, Rabindranath.

Vidyasagar College.

Chattopadhyay, Ranjankumar.
„ Syamadas.

University B. Com. Class.

Chaudhuri, Asokchandra.

Non-collegiate student (Vidyasagar College).

Chaudhuri, Bhupatinath.

Vidyasagar College.

Chaudhuri, Khageadhwaja.
40 „ Nahniranjan.

University B. Com. Class.

Chaudhuri, Purenduprakas.

Vidyasagar College.

Das, Ajitkumar.

Non-collegiate student (University B. Com. Class).

Das, Pramathanath.

University B. Com. Class.

Das, Pulinbihari.
„ Sunilchandra.

Vidyasagar College.

Dasgupta, Amiyaprasanna.

Non-collegiate student (Vidyasagar College).

Dasgupta, Kananbihari.

Vidyasagar College.

Datta, Jogindraranjan.
" Praphullakumar.

University B. Com. Class.

50 Datta, Rakhaldas.

Non-collegiate student (Vidyasagar College).

Datta, Sisirranjan.

Vidyasagar College.

Datta, Subhaschandra.
" Sunirmalchandra.

Non-collegiate student (University B. Com. Class).

Dattagupta, Sudhirkumar.

Non-collegiate student (Vidyasagar College).

Debi Sahai Chaudhary.

Vidyasagar College.

Dhar, Sadhusaran.

University B. Com. Class.

G. Radhakrishna Moorty.

Vidyasagar College.

G. C. Balakrishna Shastri.

Non-collegiate student (Vidyasagar College).

Gangopadhyay, Anilkumar.

Vidyasagar College.

60 Gangopadhyay, Syamapada.

Non collegiate students (Vidyasagar College).

Gangopadhyay, Tarapada.
Ghosh, Amalendu.
" Asitkumar.

University B. Com. Class.

Ghosh, Bhabajit.
" Binayendranath.

Vidyasagar College.

Ghosh, Birendranath.
" Brajadulal.
" Durgaprasanna.
" Kamaniya.

Non collegiate student (Vidyasagar College).

70 Ghosh, Kumares.

Vidyasagar College.

Ghosh, Nripendrabhushan.

University B. Com. Class.

Ghosh, Prasadchandra.

Vidyasagar College.

Govindlal Gajilal Jetha.
Guha, Amulyakumar.

Non-collegiate student (Vidyasagar College).

Guha, Haripada.

University B. Com. Class.

Guha, Kalipada.

Non-collegiate student (Vidyasagar College).

Harbonslal Kapoor.

Vidyasagar College.

Harish Chandra Taneja.

Non-collegiate student (Vidyasagar College).

Jagannath Prasad Goenka.

Vidyasagar College.

80 K. Narayanan.†
K. Ramaswami.*
K. R. Srinivasavardhan.

University B. Com. Class.

Kakati, Debendranath.

Non-collegiate student (Vidyasagar College).

Kar, Abanikanta.

Non-collegiate student (University B. Com. Class).

Khaitan, Krishnaprasad.
Kundu, Pranabkumar.
M. S. Ahmed.

Vidyasagar College.

Mahabir Prasad Agrawal.

Non-collegiate student (University B. Com. Class).

Majumdar, Amulyakumar.

Vidyasagar College.

90 Majumdar, Bibhutibhushan.
" Chittaranjan.

Non-collegiate student (University B. Com. Class).

Majumdar, Samareschandra.

University B. Com. Class.

Mallik, Manilal.
Md. Abdul Kaddus.

Vidyasagar College.

Mitra, Anilkumar.

Non-collegiate student (Vidyasagar College).

Mitra, Balaikrishna.

Non-collegiate student (University B. Com. Class).

Mitra, Bhupendranath.

Vidyasagar College.

Mukhopadhyay, Asutosh.
" Biswanath.
100 " Krishnakamal.
" Madanmohan.
" Manoranjan.

Non-collegiate student (Vidyasagar College).

Mukhopadhyay, Narayan.

University B. Com. Class.

Mukhopadhyay, Niradkumar.

Vidyasagar College.

Mukhopadhyay, Nirmalchandra.

Non-collegiate student (Vidyasagar College).

Mukhopadhyay, Sailendranath.

Vidyasagar College.

Mukhopadhyay, Santimay.
Mustaphi, Kinkarkumar.

†Non-collegiate in Tamil.
*Non-collegiate in Malayalam.

University B. Com. Class.

Nandi, Manojkumar.

Vidyasagar College.

110 Nath, Sukumarchandra.
Onkarmal Sabu.

Non-collegiate student (Vidyasagar College).

P. Bhaskara Menon.

Vidyasagar College.

P. J. Oommen.*

Non-collegiate student (Vidyasagar College).

Pal, Chandrakanta.

Vidyasagar College.

Pan, Panchanan.
Rameswar Agarwala.

University B. Com. Class.

Ram Niwas Singh.

Non-collegiate student (University B. Com. Class).

Ravi Varma.

Vidyasagar College.

Ray, Ajitkumar.
120 ,, Atulkrishna.
,, Rathindranath.

Non-collegiate student (Roll Ber. N. 1).

Ray, Santibhushan.

Non-collegiate student (University B. Com. Class).

Raychaudhuri, Sailendranath.

Vidyasagar College.

S. Dharmaraja Iyer.†
Sarkar, Balaichand.
Sen, Hemachandra.

University B. Com. Class.

Sen, Hirankumar.

Vidyasagar College.

Sen, Satischandra.
,, Susilkumar.

Non-collegiate student (Roll. Ber. N. 2).

130 Sengupta, Kshitiprasanna.

Vidyasagar College.

Sengupta, Ranjitkumar.

Non-collegiate student (University B. Com. Class).

Sengupta, Sachindranath.

Non-collegiate student (Vidyasagar College).

Sengupta, Sudhirkumar.

Vidyasagar College.

Senmajumdar, Biswaranjan.

University B. Com. Class.

Shri Krishna Porwal.

Vidyasagar College.

Sinharay, Ajitmohan.
Sohan Lall Sharma.

Non-collegiate student (University B. Com. Class).

Syed Shafaat Ali.

University B. Com. Class.

T. S. Somayajulu.

Non-collegiate student (University B. Com. Class).

140 V. Lakshminarayana Rao.

Non-collegiate student.

V. Venkata Chalah.

University B. Com. Class.

Vedula Venkata Kali Sastry.

Non-collegiate student (Vidyasagar College).

Vishnu Shankar Ambardekar.

144 Vishwanath Krishna Chandorkar.

B. B. DUTT,

Controller of Examinations.

*Non-collegiate in Tamil.
†Non-collegiate in Malayalam.

Calcutta University.

Senate House, the 9th July 1936.

ERRATA LIST.

1. In the list of successful candidates at the I. A. Examination, 1936, published in the *Calcutta Gazette*, dated the 28th May 1936–

(a) on page 661, for

"34 Bandyopadhyay, Uma, (II) (SH) .. Bethune College"

please read

"34 Bandyopadhyay, Uma, II (BH) .. Bethune College";

(b) on page 667, for

"562 Datta, Nirmala .. Non-collegiate student (Roll Cal. F. N. 113)"

please read

"562 Datta (Mrs. Bose), Nirmala .. Non-collegiate student (Roll Cal. F. N. 113)";

(c) on page 668, for

"673 Sanyal, Silendranarayan .. Berhampur K. N. College"

please read

"673 Sanyal, Sibendranarayan .. Berhampur K. N. College";

(d) on page 679, for

"Dasgupta, Jitendralal .. Non-collegiate student (Rajshahi College)"

please read

"Dasgupta, Jibendralal .. Non-collegiate student (Rajshahi College)";

(e) on page 692, for

"Tobiruddin Sarcar .. Rangpur Carmichael College"

please read

"Toboruddin Sarcar .. Rangpur Carmichael College".

2. In the list of successful candidates at the I. Sc. Examination, 1936, published in the *Calcutta Gazette*, dated the 21st May 1936 –

(a) on page 559, for

"9 *Chattopadhyay, Jyotibhushan (CZ) .. Scottish Church College"

please read

"9 *Chattopadhyay, Jyotibhushan (CMZ) .. Scottish Church College";

(b) on page 562, for

"249 Basu, Asimkumar .. Asutosh College"

please read

"249 Basu, Asimkumar (P) .. Asutosh College";

(c) on page 571, for

"Chattopadhyay, Santwanukumar .. Vidyasagar College"

please read

"Chattopadhyay, Santanukumar .. Vidyasagar College";

(d) on page 573, for

"De, Binaykumar .. Non-collegiate student (Presidency College)" and

"Ghosh, Bhupeschandra .. Pabna Edward College"

please read, respectively,

"Das, Binaykumar .. Non-collegiate student (Presidency College)" and

"Basu, Bhupeschandra .. Pabna Edward College";

(e) on page 577, for

"Mukhopadhyay, Paramananda .. Bankura College"

please read

"Mukhopadhyay, Paramanauda .. Bankura College";

(f) on page 579, for

"Sen, Renuka .. Bethune College"

please read

"Sen, Renuka .. Vidyasagar College".

3. In the list of successful candidates at the B A. Examination, 1936, published in the *Calcutta Gazette*, dated the 25th June 1936—

(a) on page 1068, for

"25 Das, Sen Renuka .. Scottish Church College"

please read

'25 Sen, Renuka .. Scottish Church College";

(b) on page 1069, for

"84 A. A. M. Obidur Rahman Khan Sur .. Scottish Church College"

please read

"84 A. A. M. Ohidur Rahman Khan Sur .. Scottish Church College";

(c) on page 1079, for

"Das, Bimanbihari .. Non-collegiate student (Berhampur K. N. College)"

please read

"Das, Banbihari .. Non-collegiate student (Berhampur K. N. College)";

(d) on page 1082, for

"Ghosh, Manmohan .. Serampur College"

please read

"Ghosh, Manomohan .. Serampur College";

(e) on page 1083, for

"Gupta, Sudhirkumar .. Non-collegiate student (Asutosh College)"

please read

"Gupta, Sudhirkumar .. Non-collegiate student (City College)";

(f) on page 1086, for

"Mayeim Uddin Talukdor .. Non-collegiate student (Mymensingh A.M. College)"

please read

"Mayein Uddin Talukdor .. Non-collegiate student (Mymensingh A. M. College)";

(g) on page 1093, for

"Sinha, Sachindramohan .. Bangabasi College"

please read

"Sinha, Sachindramohan .. Bankura College";

(h) on page 1088, for

"Mukhopadhyay, Niradbaran .. Ripon College"

please read

"Mukhopadhyay, Niradbaran, I .. Ripon College".

4. In the list of successful candidates at the B. Sc. Examination, 1936, published in the *Calcutta Gazette*, dated the 18th June 1936—

(a) on page 1028, for

"Datta, Sunitchandra .. Vidyasagar College"

please read

"Datta, Sunilchandra .. Vidyasagar College";

(b) on page 1030, for

"Chattopadhyay, Harishikes Bangabasi College"

please read

"Chattopadhyay, Hrishikes .. Bangabasi College".

B. B. DUTT,
Controller of Examinations.

List of students who passed the Final Examination of the Government School of Art, Calcutta, in May 1936.

Calcutta, the 8th July 1936.

	Fine Art Department.	Division.
1	Samarendra Nath Ghose	.. 1st.
2	Radha Charan Bagchi	.. 1st.
3	Sachchidananda Bhattacherjee	.. 2nd.
4	Sudhindra Kumar Bhattacherjee	.. 2nd.
5	Sudhir Kumar Guha Mojumdar	.. 2nd.
6	Amarendra Mohan De	.. 2nd.
7	Subodh Chandra Roy	.. 2nd.
8	Amarendra Nath Chatterjee	.. 3rd.
9	Abani Ranjan Deb	.. 3rd.

Commercial Department.

1	Monindra Nath Lahiri	.. 2nd.
2	Sitansu Sehar Bhattacherjee	.. 2nd.
3	Kalidas Ker	.. 2nd.
4	Jogendra Nath Chatterjee	.. 2nd.
5	Anil Kumar Roy	.. 2nd.
6	Jitendra Nath Chatterjee	.. 2nd.
7	Jnanendra Nath Chakraverty	.. 2nd.
8	Nirode Behari Basak	.. 2nd.

Draftsman Department.

1	Sudhanshu Kumar Ghosh	.. 1st.
2	Balai Chand Ghosh	.. 1st.
3	Siddhi Bhusan Malik	.. 1st.
4	Anath Bandhu Sen Gupta	.. 2nd.
5	Asit Kumar Mitra	.. 2nd.

Indian Painting Department.

1	Satyabrata Saha	.. 2nd.
2	Tripureswar Mukherjee	.. 2nd.
3	Satya Ranjan Mazumder	.. 2nd.
4	Kamala Ranjan Thakur	.. 2nd.
5	Chandra Madhab Sen Gupta	.. 2nd.

Claymodelling Department.

1	Ramendra Kumar Bose	.. 2nd.
2	Nirmal Kumar Mozumder	.. 3rd.

Wood Engraving Department.

1	Kali Prasanna Chakraborty	.. 2nd.

Lithography Department.

1	Nafar Chandra Chatterjee	.. 2nd.

Teachership Department.

1	Tarak Nath Basu	.. 2nd.
2	Indu Bhusan Rakshit	.. 2nd.

33

M. C. DEY, *Principal,*
Government School of Art, Calcutta.

Dacca Division.

NOTIFICATION.

Dacca, the 6th July 1936.

Rules for the admission of private candidates to the Calcutta University Matriculation Examination, 1937.

1. A student who has not attended any school, recognized or unrecognized, for at least one year previous to the examination, will be treated as a private candidate. Teachers of schools are also considered as private candidates.

2. Private candidates who desire to sit for the ensuing University Matriculation Examination must appear at the Test Examination of any one of the undermentioned schools, to be held on the 1st December 1936 and the days following :—

(1) Dacca Collegiate School.

(2) Mymensingh Zilla School.

(3) Jamalpur Government High School.

(4) Faridpur Zilla School.

(5) Barisal Zilla School.

(6) Bhola Government High School.

(7) Jhalakati Government High School.

(8) Pirozpur Government High School.

3. Every private candidate must submit his application for admission to the Test Examination in the prescribed form on or before the 2nd November 1936 to the Inspector of Schools, Dacca Division. He must produce a certificate from a responsible Government officer to the effect (1) that he has not attended any school, recognized or unrecognized, for at least one year previous to the examination, (2) that his conduct and character have been good, (3) that he has diligently and regularly prosecuted his studies, and (4) that he has been subject to proper discipline.

Candidates who intend to appear at the Test Examination in the Dacca Collegiate School must submit their applications in duplicate.

A student, who failed to pass the annual examination for promotion to class X at the end of the session 1935 and then left the school will not be allowed to appear at the examination.

4. Every private candidate must also forward with his application his transfer certificate from the school (if any) in which he last read, or the Registrar's receipt (if he appeared at any previous Matriculation Examination).

Those who have never read in any school should produce either their horoscope or an affidavit sworn by their parents or guardians before a competent Magistrate declaring their age and a certificate from a respectable person with personal knowledge of the fact of the case that he has never been to any school.

5. Private candidates offering Hygiene as one of their subjects will be required to satisfy the Inspector of Schools that they have undergone a course of training in the subject. For this purpose they should submit along with their applications, certificates of training in it from a registered medical practitioner or from a recognised teacher in Hygiene.

6. Private candidates from outside the territorial jurisdiction of the Calcutta University including teachers of schools must obtain the sanction of the University to their migration before they are allowed to appear at the Test Examination for private candidates.

7. Teachers of schools recognised by the Calcutta or any other University or any Board of Secondary Education in India, who intend to appear at the Matriculation Examination as private candidates, are not required to pass the Test Examination. They should apply to the University for permission to appear at the Final Examination in proper time.

8. Every private candidate must pay a fee of Rs. 5 which should be remitted to the Inspector of Schools, Dacca Division, along with the application for admission to the Test Examination, on or before the prescribed date (2nd November 1936), after which a fine of Rs. 2 will have to be paid for each week's delay up to 16th November 1936. No application will be entertained after that date. *Where there are Treasuries or Sub-Treasuries near the residence of candidates the fee should be deposited there and chalans in duplicate showing the deposit submitted to the Inspector of Schools along with the application.* If the candidate be considered eligible for admission to the Test Examination a letter of permission will be issued. This should be shown to the Headmaster on the first day of examination. *In no circumstances will this fee be refunded.*

9. On the first date of examination, he must be accompanied, for the purpose of identification, by some person known to the officer conducting the examination, otherwise he will not be admitted to the Test Examination.

10. The Headmasters of the schools named above should send to this office, for orders, a statement, *in duplicate*, showing the marks gained by each private candidate in each subject at the Test Examination, *within a fortnight from the date of the said examination.* The application forms of candidates who are declared eligible should be forwarded to this office for countersignature, duly filled in and signed.

11. Private candidates allowed to go up for the Matriculation Examination should submit their fees to the Headmaster of the Government High School where they appear at the Test Examination at the time of filling up their application forms. The Headmaster will send the fees to the Controller of Examinations along with the applications countersigned by the Inspector of Schools so as to reach him on or before the date fixed by the University.

12. The Matriculation Examination will be held in March 1937. The dates will be notified by the Calcutta University.

Intermediate and B.A. Examinations, 1937.

Bona fide teachers of recognized English schools and inspecting officers of the Education Department, who have been employed as such for at least three academical years (32 calendar months) preceding the dates of examinations, will be admitted to the I.A. and B.A. Examinations of the Calcutta University as non-collegiate students, provided they have obtained special permission of the Senate.

Demonstrators, Laboratory Assistants and Librarians of affiliated colleges are regarded as teachers.

2. Candidates who have obtained special permission of the Senate must submit their applications to this office for countersignature not later than the 2nd January 1937.

3. Candidates should carefully read the printed form of application and supply all the necessary information.

4. The following documents in original must accompany the application :—

(*a*) The letter from the Senate of the Calcutta University permitting the candidate to appear at the ensuing examination.

(*b*) The University certificate to show that the candidate has passed the next preceding examination.

(*c*) Registrar's receipt in the case of those who were admitted to the same examination in a previous year.

(*d*) Registrar's receipt to show that the candidate's name has been registered as a "University student." If his name has not already been registered, he should produce a Post Office receipt showing that the required fee of Rs. 2 has been remitted to the University to get his name registered.

(*e*) A certificate from the Secretary in the case of teachers, and from the immediate superiors in the case of others, showing (*i*) that he has been serving as such for three academical years (32 calendar months), (*ii*) that he has been diligently and regularly prosecuting his studies and (*iii*) that his character and conduct have been good.

5. The dates of I.A. and B.A. Examinations, 1937, will be notified by the Calcutta University in the *Calcutta Gazette* in due course.

6. Applications with the countersignature of the undersigned, together with the fees for the above examinations, must reach the office of the Controller of Examinations, Calcutta University, on or before the dates to be fixed by the University and must be sent to that office by the candidate himself direct.

ABUL HASHEM KHAN CHAUDHURI,

Inspector of Schools, Dacca Division.

Dacca Division.

Test Examination of private candidates for the Calcutta University Matriculation Examination, 1937.

(This application must reach the office of the Inspector of Schools, Dacca Division, on or before the 2nd November 1936.)

APPLICATION.

To the Inspector of Schools, Dacca Division, Ramna, Dacca.

Sir,

I request permission to present myself at the ensuing Test Examination of private candidates for the Matriculation Examination of 1937.

I enclose herewith the necessary certificates as required under the rules.

The fee of rupees five is remitted by postal money order./Treasury chalans, in duplicate, showing the deposit of the fee of Rs. 5 are enclosed herewith.

I am,

Sir,

Yours obediently,

Name.....

Date.....

Address.....

Particulars to be filled in by the candidates.

1. Name of candidate

2. Father's name

3. Residence

   Post office

   Village

   Police-station

   District

4. Date of birth and age on 1st March 1937.

5. Name of the school (if any) in which he last read and date of last attendance in the school.

6. Name of the Government school at which he intends to appear at the Test Examination.

7. Whether he appeared at the Matriculation Examination in any previous year.

8. Name of the centre at which he intends to appear at the Final Matriculation Examination.

9. Name of the second language.

10. Vernacular language.

11. Vernacular language from which translation is to be made into English in the first English Paper.

12. Additional subjects to be taken up :—

   (*i*) Additional Mathematics.

   (*ii*) Additional paper in classical language.

   (*iii*) History.

   (*iv*) Geography.

   (*v*) Elementary Mechanics.

N.B.—Any two of the additional subjects taken up are to be retained and the rest scored through.

Education Department, Bengal.

NOTIFICATION.

Calcutta, the 27th June 1936.

No. 5T.B.—It is hereby notified for general information that text-books written in accordance with the Syllabuses of Studies for Secondary Schools (Government and Government-aided) for Boys and Girls in Bengal, published with Government (Education Department) notification No. 3059Edn., dated the 13th November 1928, on the following subjects and for class or classes mentioned in each case, will be received for consideration by the Secretary, Provincial Text Book Committee (Writers' Buildings, Block No. V, 1st Floor, Room No. 2), Calcutta, from the 10th to 15th June 1937. A further notification announcing exact dates for submission of books called for in this notification will be published later :—

I. Text-books for pupils.

CLASS III.

(1) *Arithmetic.*

A text-book covering the syllabuses prescribed for classes III and IV.

(2) *History (Story).*

An illustrated simple primer of about 50 pages.

(3) *Geography.*

An illustrated text-book covering the syllabuses prescribed for classes III and IV (about 75 pages).

(4) *Hygiene (for boys or for girls separately).*

An illustrated primer covering the syllabuses prescribed for classes III and IV (about 64 pages).

(5) *Drawing.*

A copy book for pupils covering the syllabuses prescribed for classes III and IV.

CLASS IV.

(1) *Arithmetic.*

A text-book (*vide* instructions under class III).

(2) *History.*

An illustrated text-book of about 80 pages (covering the syllabuses prescribed).

(3) *Geography.*

An illustrated text-book (*vide* instructions under class III).

(4) *Science.*

An illustrated text-book of about 50 pages (Elementary Nature Study).

(5) *Hygiene (for boys or for girls separately).*

An illustrated text-book (*vide* instructions under class III).

(6) *Drawing.*

A copy book for pupils (*vide* instructions under class III).

CLASS V.

(1) *Arithmetic.*

A text-book (covering syllabuses prescribed for classes V and VI).

(2) *History.*

An illustrated text-book (covering syllabuses prescribed for classes V and VI).

(3) *Geography.*

An illustrated text-book (covering syllabuses prescribed for classes V and VI).

(4) *Science.*

An illustrated text-book of about 100 pages (Nature Study) covering syllabuses prescribed for classes V and VI.

(5) *Hygiene (for boys or for girls separately).*

An illustrated text-book (covering syllabuses prescribed for classes V and VI).

(6) *Drawing.*

A copy book for pupils (covering syllabuses prescribed for classes V and VI).

CLASS VI.

(1) *Mathematics.*

(*a*) Arithmetic—A text-book (*vide* instructions under class V).

(*b*) Geometry—An elementary text-book for pupils covering the syllabuses prescribed.

(2) *History.*

An illustrated text-book with special chapters on English History for class VI (*vide* instructions under class V).

(3) *Geography.*

An illustrated text-book (*vide* instructions under class V).

(4) *Science.*

An illustrated text-book (*vide* instructions under class V).

(5) *Hygiene (for boys or for girls separately).*

An illustrated text-book (*vide* instructions under class V).

(6) *Drawing.*

A copy book for pupils (*vide* instructions under class V).

CLASS VII.

(1) *Mathematics.*

*(*a*) A text-book on Arithmetic.

*(*b*) A text-book on Algebra.

*(*c*) A text-book on Geometry.

(2) *History and Civics.*

An illustrated text book covering syllabuses prescribed for classes VII and VIII (with special chapters on Civics for class VIII).

(3) *Geography.*

A text-book covering syllabuses prescribed for classes VII and VIII (with special chapters on Physical Geography).

*Covering syllabuses prescribed for classes VII—X.

(4) *Science.*

An illustrated text-book of about 100 pages covering syllabuses prescribed for classes VII and VIII.

(5) *Classics.*

(*a*) *Sanskrit*—A reader of about 30 pages including 6 pages of easy poems.

(*b*) *Pali*—A reader of about 30 pages including 6 pages of easy poems.

(*c*) *Persian*—A reader of about 30 pages including 6 pages of easy poems.

(*d*) *Arabic*—

(*i*) A reader of about 30 pages including 6 pages of easy poems.

(*ii*) An Arabic copy book.

(6) *Hygiene (for boys or for girls separately).*

An illustrated text-book covering syllabuses prescribed for classes VII and VIII.

CLASS VIII.

(1) *Mathematics.*

*(*a*) A text-book on Arithmetic.

*(*b*) A text-book on Algebra.

*(*c*) A text-book on Geometry.

(*d*) *Mensuration and Surveying.*—A text-book covering the syllabuses prescribed for classes VIII—X.

(2) *History and Civics.*

An illustrated text-book (with special chapters on Civics not exceeding 50 pages (*vide* instructions under class VII).

(3) *Geography.*

A text-book (*vide* insturctions under class VII).

*(4) *Science.*

An illustrated text-book (*vide* instructions under class VII).

(5) *Classics.*

(*a*) *Sanskrit.*—A reader of about 40 pages including 8 pages of easy poems.

(*b*) *Pali.*—A reader of about 40 pages including 8 pages of easy poems.

(*c*) *Arabic.*—

(*i*) A reader of about 40 pages including 8 pages of easy poems.

(*ii*) An Arabic copy book.

(6) *Hygiene (for boys or for girls separately).*

An illustrated text-book (*vide* instructions under class VII).

II. Teachers' books.†

(*i*) Physical Training (for boys' and girls' schools).

(*ii*) Needle-work (for girls' schools).

(*iii*) Cookery (for girls' schools).

N.B.—(1) Text-books on the above subjects which are already on the approved lists (*vide* this office notifications Nos. 5T.B., dated the 21st October 1933 and 12T.B., dated the 28th September 1934) will be cancelled after 31st December 1938. Authors or publishers will be permitted to submit those books as well as new books on the above subjects for consideration by the Text-Book Committee. Text-books written in Urdu, Hindi and Nepali in all subjects mentioned above will also be received for consideration.

---

* *(*Vide* instructions under class VII).

†No books are required for pupils.

(2) No books will be received by the Secretary before the date specified in this notification. Each book should be submitted in six* copies with an application in the following form :—

(*i*) Name of book.
(*ii*) Class for which it is intended.
(*iii*) Name of author.
(*iv*) Name of publisher.
(*v*) Name and address of press where printed.
(*vi*) Address of author and publisher.
(*vii*) Whether the book was previously submitted for approval and, if so, with what result.

(3) Syllabuses of Hygiene for classes VII and VIII of boys' schools and for classes III—VIII of girls' schools have been revised (*vide* Government notification No. 400T.Edn., dated the 22nd May 1935, and Government notification No. 2415Edn., dated the 25th August 1932). Text-books should be prepared according to the revised syllabuses.

(4) Two declarations as shown below should be forwarded to the Secretary, Text Book Committee, for record along with the submission of each book called for in this notification.

(*i*) I (We) declare that I(We) am (are) the author (s) of the book entitled ....and published by.....

Signature of author (s)

Dated.....

(*ii*) I (We) declare that no copyright materal has been used in the book entitled...../necessary permission has been obtained for the copyright materal that has been used in the book entitled.....

Signature of author (s) or publisher (s).

Dated.....

(5) A sum of Rs. 12 should be paid as fee for each text-book mentioned under classes III—VI, and for each Sanskrit, Pali, Persian and Arabic Primer (including Arabic Copy book) for classes VII and VIII, and Rs. 15 for each of the other text-books mentioned under classes VII and VIII above. A sum of Rs. 6 should be paid for each book for teachers on Physical Training, Needle Work and Cookery. A chalan showing payment into a Government Treasury in Bengal of the respective sum should accompany the application submitting each book to the Committee. One treasury chalan may, however, be used in depositing fees for all books intended for one class on the same subject. No book will be considered unless it is accompanied by a treasury chalan. Fees once deposited will not be refunded.

Chalan forms may as well be available in this office. The following particulars should be given in each treasury chalan for each book separately :—

(*i*) Name of book and its author.
(*ii*) Class or classes for which submitted.
(*iii*) Amount of fees deposited.

(6) It is desirable that the title of a book submitted to the Committee for consideration should be printed at the top of each leaf of the book.

(7) The canvassing of members of the Text Book Committee by authors or publishers or any one on their behalf will render their books liable to disqualification.

(8) Books submitted to the Secretary should always be in print.

(9) No name except that of author and publisher should be allowed on the cover or title-page (*i.e.*, no name of editor, reviser or writer of foreword or preface should be allowed).

(10) Mat (*i.e.*, dull) and not shining paper should be used.

(11) The office of the Secretary, Provincial Text Book Committee, does not hold itself responsible for answering letters regarding books under the consideration of the Committee. The names of books approved will be duly notified.

J. M. BOTTOMLEY,
Director of Public Instruction, Bengal.

*Four of these copies should contain no names of authors or publishers on the cover, inner title page, in the preface or elsewhere. The identity of the author or publisher should in no way be revealed in these copies.

State Medical Faculty of Bengal.

NOTIFICATION.

Calcutta, the 30th June 1936.

No. 2819F.—The undermentioned candidates are declared to have passed the Intermediate Licentiateship Examination held in May 1936 :—

(In alphabetical order.)

	Name.		School.
	Abul Muhsin	..	Campbell Medical School.
	Adhikari, Rabindrachandra	..	Dacca Medical School.
	Ahmad Ali Chowdhury	..	Chittagong Medical School.
	Ajhar Uddin Ahmed	..	Dacca Medical School.
	Anirudh Chaturvedi	..	Calcutta Medical School.
	Ashraf Hossain	..	Campbell Medical School.
	Badiul Alam	..	Chittagong Medical School.
	Baguhi, Satyendrasekhar	..	Jackson Medical School, Jalpaiguri.
	,, Sudhirkumar	..	Campbell Medical School.
10	Bandyopadhyay, Ajitkumar	..	Ditto.
	,, Ajitkumar	..	Ronaldshay Medical School, Burdwan.
	,, Biswanath	..	Ditto.
	,, Debnarayan	..	Jackson Medical School, Jalpaiguri.
	,, Jitendranath	..	National Medical Institute.
	,, Nareschandra	..	Ditto.
	,, Niranjan	..	Dacca Medical School.
	,, Susilkumar	..	National Medical Institute.
	Banik, Krishnakumar	..	Ditto.
	,, Saileschandra	..	Lytton Medical School, Mymensingh.
20	Baruya, Atulchandra	..	National Medical Institute.
	,, Didhitibhushan	..	Chittagong Medical School.
	Basu, Anilchandra	..	Calcutta Medical School.
	,, Manindrakumar	..	Campbell Medical School.
	,, Parimalchandra	..	Dacca Medical School.
	,, Santoshkumar	..	Ditto.
	Basuchaudhuri, Sukomalkanta	..	Ditto.
	Bhadra, Sachindrachandra	..	Calcutta Medical School.
	Bhattacharyya, Asutosh	..	Campbell Medical School.
	,, Bankimchandra	..	Calcutta Medical School.
30	,, Dhirendranath	..	Lytton Medical School, Mymensingh.
	,, Narendranath, I	..	Campbell Medical School.
	,, Narendranath, II		Ditto.
	,, Prankumar	..	Dacca Medical School.
	,, Sachindrakumar	..	Campbell Medical School.
	,, Sailendrakisor	..	Dacca Medical School.
	,, Saktikumar	..	National Medical Institute.
	Bhaumik, Jitendrachandra	..	Chittagong Medical School.
	,, Satyendrakumar	..	Ditto.
	Biswas, Aswinikumar	..	Campbell Medical School.
40	Brahmachari, Anilkumar	..	Ronaldshay Medical School, Burdwan.
	Chakrabarti, Amulyagopal	..	Chittagong Medical School.
	,, Bijaykrishna	..	Ronaldshay Medical School, Burdwan.
	,, Harakanta	..	Dacca Medical School.
	,, Khagendrachandra	..	Ditto.
	,, Pramodranjan	..	Ditto.
	,, Santibidhan	..	Campbell Medical School.
	,, Sudhirkumar	..	Ditto.
	,, Sukhendrakumar	..	Dacca Medical School.
	,, Surendrakrishna	..	National Medical Institute.
50	,, Tarapada	..	Bankura Sammilani Medical School.
	,, Tribenimohan	..	Campbell Medical School.
	Chattopadhyay, Bankimchandra	..	Bankura Sammilani Medical School.
	,, Golokpati	..	Ronaldshay Medical School, Burdwan.
	,, Jnanendrasekhar	..	Campbell Medical School.
	,, Nandagopal	..	Ronaldshay Medical School, Burdwan.
	,, Prankumar	..	Lytton Medical School, Mymensingh.
	,, Sanjibchandra	..	Campbell Medical School.
	,, Sasibhushan	..	Calcutta Medical School.
	Chaudhuri, Bholanath	..	Campbell Medical School.
60	,, Birendranath	..	National Medical Institute.
	,, Harirakhal	..	Chittagong Medical School.
	,, Nanimadhab	..	National Medical Institute.
	,, Nikhilbandhu	..	Bankura Sammilani Medical School.
	,, Pagalchandra	..	Calcutta Medical School.
	,, Phanindramohan	..	Ditto.
	,, Ramapati	..	Ronaldshay Medical School, Burdwan.
	,, Sisirkumar	..	Campbell Medical School.
	,, Subodhchandra	..	Ronaldshay Medical School, Burdwan.
	Das, Jitendranath	..	Campbell Medical School.
70	,, Krishnagopal	..	Dacca Medical School.
	,, Lakshmanchandra	..	National Medical Institute.
	,, Niranjankumar	..	Dacca Medical School.
	,, Parindrachandra	..	Ditto.
	,, Radharaman	..	Calcutta Medical School.
	,, Sukumar	..	Dacca Medical School.
	,, Tarapada	..	Jackson Medical School, Jalpaiguri.
	Dasbhaumik, Sukumar	..	Chittagong Medical School.

	Name.		School.
	Dasgupta, Lila	..	Campbell Medical School.
	,, Praneschandra	..	National Medical Institute.
80	Datta, Ahibhushan	..	Ronaldshay Medical School, Burdwan.
	,, Anukulchandra	..	Campbell Medical School.
	,, Gaursankar	..	Ronaldshay Medical School, Burdwan.
	,, Harapada	..	Dacca Medical School.
	,, Sankaracharan	..	Calcutta Medical School.
	,, Sudhirendranath	..	Dacca Medical School.
	Dattabaksi, Kaliprasad	..	Jackson Medical School, Jalpaiguri.
	Dattachaudhuri, Sunilkumar	..	Lytton Medical School, Mymensingh.
	De, Binodbihari	..	Calcutta Medical School.
	,, Birendrakumar	..	Chittagong Medical School.
90	,, Nikunjabihari	..	Calcutta Medical School.
	,, Pareschandra	..	Dacca Medical School.
	,, Subalchandra	..	Chittagong Medical School.
	,, Sudhira	..	Dacca Medical School.
	,, Sureschandra	..	Lytton Medical School, Mymensingh.
	Deb, Bimalakanta	..	Chittagong Medical School.
	,, Satyakumar	..	Campbell Medical School.
	Dewan Chand Kalra	..	Bankura Sammilani Medical School.
	,, Hunansubimal	..	Chittagong Medical School.
	Dhani, Gangadhar	..	Campbell Medical School.
100	Dingal, Srisht dhar	..	Calcutta Medical School.
	Ezharal Haque	..	Chittagong Medical School.
	Fidelis Passah	..	Campbell Medical School.
	Gangopadhyay, Kalidas	..	Ditto.
	,, Nareschandra	..	Dacca Medical School.
	,, Satikumar	..	Calcutta Medical School.
	Ghatak, Dhirendramohan	..	Dacca Medical School.
	Ghosh, Anilkumar	..	Lytton Medical School, Mymensingh.
	,, Dibakar	..	Calcutta Medical School.
	,, Indujyoti	..	Campbell Medical School.
110	,, Kanailal	..	Ronaldshay Medical School, Burdwan.
	,, Mihirkumar	..	Ditto.
	,, Nimaichand	..	National Medical Institute.
	,, Pramodendu	..	Bankura Sammilani Medical School.
	,, Ramendranath	..	Calcutta Medical School.
	Girdhari Lal Chugh	..	National Medical Institute.
	Gomes, Xavier	..	Ditto.
	Habibur Rahman Bhuiya	..	Dacca Medical School.
	Haldar, Prakaschandra	..	Calcutta Medical School.
	Kar, Asutosh	..	Dacca Medical School.
120	,, Samarendra	..	Lytton Medical School, Mymensingh.
	Karmakar, Manikchandra	..	Calcutta Medical School.
	Kumar, Paresnath	..	Ditto.
	,, Sudhansusekhar	..	Bankura Sammilani Medical School.
	Kundanlal Arora	..	National Medical Institute.
	Kundu, Bibhaschandra	..	Campbell Medical School.
	,, Narendrachandra	..	Calcutta Medical School.
	Lala Dineshwar Prasad	..	Campbell Medical School.
	Mahammad Yousuf	..	Ditto.
	Maiti, Atulchandra	..	Ditto.
130	Maitra, Amitabha	..	Ditto.
	,, Jnanendranath	..	National Medical Institute.
	Majumdar, Bijaygobinda	..	Dacca Medical School.
	,, Pijushkanti	..	Calcutta Medical School.
	,, Samarendranath	..	Campbell Medical School.
	Mallik, Sudhendukumar	..	Chittagong Medical School.
	Mandal, Benimadhab	..	Campbell Medical School.
	,, Golokbihari	..	Ronaldshay Medical School, Burdwan.
	,, Sadhanchandra	..	Calcutta Medical School.
140	,, Susilkumar	..	National Medical Institute.
	Manna, Satyamohan	..	Campbell Medical School.
	Matiul Islam	..	Dacca Medical School.
	Md. Abdul Quddus	..	Lytton Medical School, Mymensingh.
	Md. Idris	..	Campbell Medical School.
	Md. Nurus Safa	..	Chittagong Medical School.
	Mitra, Kanailal	..	Campbell Medical School.
	,, Nareschandra	..	Dacca Medical School.
	,, Subodhkumar	..	Ditto.
	Mohammad Abdur Rauf	..	Campbell Medical School.
150	Moinuddin Ahmed	..	Ditto.
	Mosherrif Hossain	..	Dacca Medical School.
	Mukhopadhyay, Abanibhushan	..	Campbell Medical School.
	,, Ajitkumar	..	Ronaldshay Medical School, Burdwan.
	,, Binaybhushan	..	Calcutta Medical School.
	,, Durgadas	..	Bankura Sammilani Medical School.
	,, Hirendranath	..	Calcutta Medical School.
	,, Kamalkrishna		Ronaldshay Medical School, Burdwan.
	,, Kanailal	..	Calcutta Medical School.
	,, Kantibilas	..	Ronaldshay Medical School, Burdwan.
160	,, Pasupatinath		Campbell Medical School.
	,, Sailendrakumar	..	Ronaldshay Medical School, Burdwan.
	,, Sailendranath	..	Calcutta Medical School.
	,, Saktipada	..	Ronaldshay Medical School, Burdwan.
	,, Sudhansusekhar	..	Bankura Sammilani Medical School.
	,, Sukumar	..	Jackson Medical School, Jalpaiguri.
	Nag, Birendrakumar	..	Dacca Medical School.
	Naha, Pramodranjan	..	Chittagong Medical School.

	Name.		School.
	Nandi, Mukundamohan	..	Campbell Medical School.
	Nath, Ardhenduwekhar	..	National Medical Institute.
170	Pal, Dhrubabhushan	..	Bankura Sammilani Medical School.
	,, Haripada	..	Lytton Medical School, Mymensingh.
	,, Jyotishchandra	..	National Medical School Institute.
	,, Pramathanath	..	Ronaldshay Medical School, Burdwan.
	,, Priyaranjan	..	Chittagong Medical School.
	,, Santoshchandra	..	Lytton Medical School, Mymensingh.
	,, Sarojkanti	..	Ditto.
	,, Sudhirchandra	..	Dacca Medical School.
	,, Syamlal	..	Ditto.
	Pandit, Phanindranath	..	Lytton Medical School, Mymensingh.
180	Pathak, Rameschandra	..	Ditto.
	Patra, Lakshminarayan	..	Campbell Medical School.
	Patranabis, Saileschandra	..	Lytton Medical School, Mymensingh.
	Rakshit, Dineschandra	..	National Medical Institute.
	Ray, Bansidhar	..	Ronaldshay Medical School, Burdwan.
	,, Bimalakanta	..	National Medical Institute.
	,, Birendranarayan	..	Dacca Medical School.
	,, Dineschandra	..	Campbell Medical School.
	,, Dinesranjan	..	Dacca Medical School.
	,, Durgapada	..	Campbell Medical School.
190	,, Ganeschandra	..	Jackson Medical School, Jalpaiguri.
	,, Nitaicharan	..	Bankura Sammilani Medical School.
	,, Paritoshbandhu	..	Campbell Medical School.
	,, Taraprasanna	..	Chittagong Medical School.
	,, Trilochan	..	Campbell Medical School.
	,, Upendrakumar	..	Dacca Medical School.
	,, Ushakanta	..	Campbell Medical School.
	Raychaudhuri, Debiprasad	..	Ditto.
	,, Mrinalkanti	..	Jackson Medical School, Jalpaiguri.
	,, Sudhansumohan	..	Dacca Medical School.
200	Raykarmakar, Panku	..	Lytton Medical School, Mymensingh.
	Saha, Bansimohan	..	Campbell Medical School.
	,, Bimalchandra	..	Ditto.
	,, Gokulchandra	..	Dacca Medical School.
	,, Hiralal	..	Ditto.
	,, Rampada	..	Campbell Medical School.
	,, Satyaranjan	..	Lytton Medical School, Mymensingh.
	,, Sudhirchandra	..	Dacca Medical School.
	,, Syamlal	..	Calcutta Medical School.
	Saharay, Ramaniranjan	..	Lytton Medical School, Mymensingh.
210	Sarkar, Binaykumar	..	Jackson Medical School, Jalpaiguri.
	,, Karunakanta	..	Calcutta Medical School.
	,, Khageschandra	..	Dacca Medical School.
	Sen, Baidyanath	..	Campbell Medical School.
	,, Balaichandra	..	Calcutta Medical School.
	,, Himansubhushan	..	Campbell Medical School.
	,, Manindrachandra	..	Dacca Medical School.
	,, Sachindranath	..	Calcutta Medical School.
	Sengupta, Barindranath	..	Chittagong Medical School.
	,, Kalipada	..	Campbell Medical School.
220	,, Manimohan	..	Dacca Medical School.
	,, Sailendranath	..	Calcutta Medical School.
	,, Sailendraprasad	..	Dacca Medical School.
	,, Sudhischandra	..	National Medical Institute.
	,, Sukumar	..	Jackson Medical School, Jalpaiguri.
	Shamsul Alam Chowdhury	..	Dacca Medical School.
	Sihi, Panchugopal	..	National Medical Institute.
	Syed Moshareff Hossain	..	Dacca Medical School.
	Talukdar, Radhasyam	..	Ditto.
229	Zinat Hossain Shah	..	Campbell Medical School.

II. The undermentioned candidates are declared to have passed the Final Licentiateship Examination held in May 1936 :—

(In alphabetical order.)

	Name.		School.
	Afsaruddin Ahmed	..	Dacca Medical School.
	Ahmed Sobhan	..	Chittagong Medical School.
	Aich, Ranendralal	..	Dacca Medical School.
	A. M. Mosbah Uddin Ahmed	..	Ditto.
	A. N. Md. Abdus Salam Faquir	..	Lytton Medical School, Mymensingh.
	Anwar Uddin Tarafdar	..	Dacca Medical School.
	Bagchi, Dilipkumar	..	National Medical Institute.
	Bandyopadhyay, Ajitkumar	..	Campbell Medical School.
	,, Amalkanti	..	Ditto.
10	,, Birendrakumar	..	Ditto.
	,, Chandicharan, I	..	Calcutta Medical School.
	,, Chandicharan, II	..	Ditto.
	,, Mahadebchandra	..	Ronaldshay Medical School, Burdwan.
	,, Narayanchandra	..	Dacca Medical School.
	,, Phanindranath	..	Lytton Medical School, Mymensingh.
	,, Praphullakumar	..	Bankura Sammilani Medical School.
	,, Ramdas	..	Campbell Medical School.
	,, Rammay	..	Calcutta Medical School.

	Name.	School.
	Banik, Rajendralal	.. Dacca Medical School.
20	Bardhan, Khagendrakumar	.. Calcutta Medical School.
	Basu, Girindranath	.. Bankura Sammilani Medical School.
	,, Kumudranjan	.. Calcutta Medical School.
	,, Nisikanta	.. Dacca Medical School.
	,, Ramchandra	.. National Medical Institute.
	,, Sasankasekhar	.. Jackson Medical School, Jalpaiguri.
	,, Santoshkumar	.. Campbell Medical School.
	,, Sukumar	.. Dacca Medical School.
	Bera, Sudhirkumar	.. Ronaldshay Medical School, Burdwan.
	Bhaduri, Atulchandra	.. Campbell Medical School.
30	Bhattacharyya, Bijanbihari	.. Ronaldshay Medical School, Burdwan.
	,, Gurudas	.. Calcutta Medical School.
	,, Kamakhyacharan	.. Campbell Medical School.
	,, Kiranchandra	.. Chittagong Medical School.
	,, Mahendranath	.. National Medical Institute.
	,, Prabhatkumar	.. Campbell Medical School.
	,, Satyaprakas	.. Ronaldshay Medical School, Burdwan.
	Bhaumik, Saileschandra	.. Campbell Medical School.
	Bhuian, Labanyaprabha	.. Ditto.
	Biswas, Agnes	.. Calcutta Medical School.
40	,, Dhirendranath	.. Bankura Sammilani Medical School.
	,, Madhabendu	.. Campbell Medical School.
	,, Rabindranath	.. Bankura Sammilani Medical School.
	Chakrabarti, Adinath	.. Dacca Medical School.
	,, Atulchandra	.. Calcutta Medical School.
	,, Bibhutibhushan	.. Ditto.
	,, Nanigopal	.. Ditto.
	,, Nisikanta	.. Lytton Medical School, Mymensingh.
	,, Rabindranath	.. National Medical Institute.
	,, Sailendranath	.. Campbell Medical School.
50	,, Sudhansusekhar	.. Calcutta Medical School.
	Chanda, Haralal	.. Dacca Medical School.
	Chattopadhyay, Bholanath	.. Ronaldshay Medical School, Burdwan.
	,, Bholanath	.. Calcutta Medical School.
	,, Kalipada	.. Ditto.
	,, Munindralal	.. Lytton Medical School, Mymensingh.
	,, Prabodhchandra	.. National Medical Institute.
	Chaudhuri, Anilkumar	.. Chittagong Medical School.
	,, Asutosh	.. Dacca Medical School.
	,, Gaganchandra	.. Bankura Sammilani Medical School.
60	,, Kalipada	.. National Medical Institute.
	,, Nirmalkumar	.. Bankura Sammilani Medical School.
	,, Sibaprasad	.. Jackson Medical School, Jalpaiguri.
	,, Subodhkumar	.. National Medical Institute.
	Das, Bijalibhushan	.. Campbell Medical School.
	,, Kanailal	.. Calcutta Medical School.
	,, Mahimchandra	.. National Medical Institute.
	,, Manindranath	.. Campbell Medical School.
	,, Subodhchandra	.. Calcutta Medical School.
	Dasgupta, Birendranath	.. Campbell Medical School.
70	,, Sukumar	.. National Medical Institute.
	,, Susilchandra	.. Ditto.
	Datta, Brajalal	.. Dacca Medical School.
	,, Gobardhan	.. Ronaldshay Medical School, Burdwan.
	,, Mahendranath	.. National Medical Institute.
	,, Ramaniranjan	.. Chittagong Medical School.
	,, Srikanta	.. Calcutta Medical School.
	De, Gaurisankar	.. Campbell Medical School.
	,, Nagendrabihari	.. Lytton Medical School, Mymensingh.
	,, Sarojkumar*	.. Dacca Medical School.
80	Debmandal, Sripatischandra	.. Campbell Medical School.
	Dhar, Harinath	.. Dacca Medical School.
	Dunn, Muriel S.	.. Campbell Medical School.
	Gangopadhyay, Amiyalal	.. Bankura Sammilani Medical School.
	,, Amulyadhan	.. Calcutta Medical School.
	,, Syamapada	.. Dacca Medical School.
	,, Syamapada	.. Ronaldshay Medical School, Burdwan.
	Ghatak, Nityananda	.. National Medical Institute.
	Ghosh, Ajitkumar	.. Ronaldshay Medical School, Burdwan.
	,, Anilkumar	.. Campbell Medical School.
90	,, Aswinikumar	.. Ditto.
	,, Bibhutibhushan	.. Ditto.
	,, Bishnupada	.. Calcutta Medical School.
	,, Gunindranarayan	.. Lytton Medical School, Mymensingh.
	,, Haradhan	.. Calcutta Medical School.
	,, Jyotirmay	.. Dacca Medical School.
	,, Kamalapati	.. Campbell Medical School.
	,, Kedarnath	.. Dacca Medical School.
	,, Kuladaranjan	.. Ditto.
	,, Radhajiban	.. Campbell Medical School.
100	Ghoshal, Anilkrishna	.. Ditto.
	Guha, Suchamay	.. Calcutta Medical School.
	,, Susilchandra	.. Dacca Medical School.
	Gupta, Siddheswar	.. Bankura Sammilani Medical School.
	H. A. Giasuddin	.. Jackson Medical School, Jalpaiguri.

*Passed with distinction in Medical Jurisprudence and Hygiene.

	Name.	School.
	Hajra, Bibakananda	.. Calcutta Medical School.
	,, Biswanath	.. Campbell Medical School.
	,, Jatindranath	.. Calcutta Medical School.
	,, Pramodranjan	.. Ditto.
	Haldar, Jagatbandhu	.. National Medical Institute.
110	Indu, Ramaniranjan	.. Ditto.
	Jagannath Bhagat	.. Ditto.
	Jana, Sudhirchandra	.. Ditto.
	Kar, Debendrakumar	.. Campbell Medical School.
	Karmakar, Chittaranjan	.. Calcutta Medial School.
	Kazi Alauddin Ahmed	.. Chittagong Medical School.
	Khanna, Kishoram	.. National Medical Institute.
	Konar, Balakrishna	.. Ronaldshay Medical School, Burdwan.
	Kshetri, Taraknath	.. National Medical Institute.
	Kuleswar Singha	.. Chittagong Medical School.
120	Kundu, Adhirkumar	.. Jackson Medical School, Jalpaiguri.
	,, Nityagopal	.. Dacca Medical School.
	Lahiri, Binaybhushan	.. Calcutta Medical School.
	Mahapatra, Nisikanta	.. Bankura Sammilani Medical School.
	Mahtab Uddin Ahmed	.. Dacca Medical School.
	Maitra, Ajitkumar	.. Campbell Medical School.
	Majumdar, Manoranjan	Chittagong Medical School.
	,, Rabindramohan	.. Campbell Medical School.
	Malakar, Dineschandra	.. Jackson Medical School, Jalpaiguri.
	Mallik, Durgapada	.. Calcutta Medical School.
130	Mandal, Anilkumar	.. Campbell Medical School.
	,, Jogendranath	.. National Medical Institute.
	Md. Abdul Jalil	.. Ronaldshay Medical School, Burdwan.
	Md. Abdul Wadud	.. Dacca Medical School.
	Md. Abdur Rahaman	.. Campbell Medical School.
	Md. Aminul Islam	.. Dacca Medical School.
	Md. Mobarak Ali	.. Ronaldshay Medical School, Burdwan.
	Md. Moinul Islam	.. Campbell Medical School.
	Md. Mufazzal Hossain	.. Dacca Medical School.
	Md. Nasiruddin Meah	.. Campbell Medical School.
140	Md. Zakaria	.. Ronaldshay Medical School, Burdwan.
	Misra, Prabodhchandra	.. Calcutta Medical School.
	Mistri, Jitendranath	.. Dacca Medical School.
	Mitra, Jagadananda	.. Bankura Sammilani Medical School.
	,, Pasupati	.. National Medical Institute.
	Mohammad Tahir	.. Ronaldshay Medical School, Burdwan.
	Mohammed Abul Hossain	.. Campbell Medical School.
	Mukhopadhyay, Adikesab	.. National Medical Institute.
	,, Dhirendranath	.. Bankura Sammilani Medical School.
	,, Gopikrishna	.. Ditto.
150	,, Gurupada	.. Ditto.
	,, Haripada	.. Dacca Medical School.
	,, Kshetragopal	.. Ronaldshay Medical School, Burdwan.
	,, Kshudiram	.. National Medical Instititute.
	,, Narayanchandra	.. Dacca Medical School.
	,, Prabhaskumar	.. National Medical Institute.
	,, Prabhatkumar	.. Campbell Medical School.
	,, Ramchandra	.. Bankura Sammilani Medical School.
	,, Sachindrachandra	Dacca Medical School.
	Mustaphi, Binaybhushan	.. Campbell Medical School.
160	Nag, Narendranath	.. Ronaldshay Medical School, Burdwan.
	Nandi, Ajaykumar	Jackson Medical School, Jalpaiguri.
	,, Bimalapada	.. Ronaldshay Medical School, Burdwan.
	,, Binaybushan	.. Chittagong Medical School.
	,, Nagendrachandra	.. Lytton Medical School, Mymensingh.
	,, Sukhendubikas	.. Chittagong Medical School.
	Niyogi, Gobindadas	.. Lytton Medical School, Mymensingh.
	Nur Mohammed Mondal	.. Campbell Medical School.
	Pal, Bishnupada	.. Calcutta Medical School.
	,, Dinanath	.. National Medical Institute.
170	,, Hrishikes	.. Campbell Medical School.
	,, Lalitmohan	Ditto.
	,, Nakarilal	.. Dacca Medical School.
	,, Phakirchandra	.. Ronaldshay Medical School, Burdwan.
	,, Priyaranjan	.. Lytton Medical School, Mymensingh.
	,, Sailendranath	.. Calcutta Medical School.
	,, Subodhkumar	.. Campbell Medical School.
	,, Tryambaknath	.. Ronaldshay Medical School, Burdwan.
	Pramanik, Herambacharan	.. Calcutta Medical School.
	Quazi Azizul Hoque	.. Chittagong Medical School.
180	Ray, Ajitkumar	.. National Medical Institute.
	,, Anadibhusan	.. Bankura Sammilani Medical School.
	,, Bireswar	.. Campbell Medical School.
	,, Madanmohan	.. Ditto.
	,, Pramodkumar	.. Calcutta Medical School.
	,, Prasutosh	.. Ronaldshay Medical School, Burdwan.
	,, Purnendubikas	.. Chittagong Medical School.
	,, Ranendramohan	.. Lytton Medical School, Mymensingh.
	,, Sarojbikas	.. Bankura Sammilani Medical School.
	Raychaudhuri, Nirmalkumar	.. National Medical Institute.
190	,, Surendramohan	.. Ditto.
	Roffiuddin Mondal	.. Campbell Medical School.

	Name.		School.
	Saha, Bhabeschandra	..	Jackson Medical School, Jalpaiguri.
	,, Bijayratan	..	National Medical Institute.
	,, Kshetramohan	..	Chittagong Medical School.
	,, Syamlal	..	Dacca Medical School.
	Sahana, Sachindranath	..	Ronaldshay Medical School, Burdwan.
	Santra, Nityananda	..	Ditto.
	Sanyal, Priyanath	..	Jackson Medical School, Jalpaiguri.
	Sarkar, Himansukumar	..	Calcutta Medical School.
200	,, Nilratan	..	Campbell Medical School.
	,, Nitaipada	..	Calcutta Medical School.
	,, Pramodbihari	..	Dacca Medical School.
	,, Rammay	..	Bankura Sammilani Medical School.
	,, Rampriya	..	Jackson Medical School, Jalpaiguri.
	,, Sarojmohan	..	National Medical Institute.
	,, Sasibhushan	..	Campbell Medical School.
	Sen, Gopalchandra	..	Dacca Medical School.
	,, Jaydebprasad	..	National Medical Institute.
	,, Nirmalchandra	..	Ditto.
210	,, Santijiban	..	Dacca Medical School.
	,, Sukhendubhushan	..	Ditto.
	Sengupta, Anilranjan	..	Calcutta Medical School.
	,, Sarkendramohan	..	Dacca Medical School.
	,, Sarojkumar	..	Ditto.
	Shah Md. Lutfor Rahman	..	Campbell Medical School.
	Shaikh Gul Mahammad	..	Ditto.
	Sikdar, Arabindanath	..	Ditto.
	Sil, Hiranmay	..	National Medical Institute.
	Sinha, Kalidas	..	Campbell Medical School.
	,, Sibaranjan	..	Ronaldshay Medical School, Burdwan.
	Syed Saadat Ali	..	Calcutta Medical School.
	Tafazzal Hussain Chowdhury	..	Chittagong Medical School.
	Vikramananda Vaidya	..	Campbell Medical School.
	Violet, Idis	..	Ditto.
	Zahurul Karim Khan	..	Dacca Medical School.
226	Zulfaquar Ali	..	Chittagong Medical School.

R. M. DASS, *Secretary.*

Office of the Director of Public Instruction, Bengal.

NOTIFICATION.

Calcutta, the 9th July 1936.

The following students are awarded senior scholarships on the combined results of the Intermediate Examinations in Arts and Science of Calcutta University held in 1936. The scholarships take effect from the 1st June 1936 for two years.

(Principals of Colleges are requested to report to the Director of Public Instruction, Bengal, the names of holders of the scholarships as soon as they are admitted. No scholarship can be drawn until this information is available with respect to every scholarship-holder) : –

Ten first grade scholarships of Rs. 25 a month each.

1	Pasupati Mukhopadhyay	..	Bangabasi College.
2	Parimalkanti Ghosh	..	Ditto.
3	Atulchandra Mukhopadhyay	..	Presidency College.
4	Himadrinarayan Ray	..	St. Xavier's College.
5	Anilkanta Bhattacharyya	..	Ripon College.
	Sadananda Chakrabarti	..	Burdwan Raj College.
7	Pratapchandra Sen	..	Non-collegiate student (Presidency College).
8	Debidas Majumdar	..	Presidency College.
9	Anantanath Bhattacharyya	..	Non-collegiate student (Presidency College).
10	Harisadhan Ghosh	..	Ripon College.

Twenty-eight second grade scholarships of Rs. 20 a month each.

Calcutta—10.

1	Asimranjan Raychaudhuri	.. Sanskrit College.
2	Sumarendranath Sen	.. Vidyasagar College.
3	Debadas Sen	.. Presidency College.
4	Sarasiranjan Mukhopadhyay	.. Bangabasi College.
5	Dhrubadas Basu	.. Scottish Church College.
6	Ajaykumar Majumdar	.. Presidency College.
7	Subodhchandra Sen	.. Ditto.
8	Gobindatosh Chattopadhyay	.. Ditto.
9	Himansukumar Sengupta	.. Bangabasi College.
10	Sunilchandra Guha	.. Scottish Church College.

Presidency Division—5.

1	Gobindagopal Mukhopadhyay	.. Krishnagar College.
2	Bankimchandra Chattopadhyay	.. Bagerhat P. C. College.
3	Debaprasad Chattopadhyay	.. Krishnagar College.
4	Praphullaranjan Das	.. Ditto.
5	Sachindranath Basu	.. Daulatpur Hindu Academy.

Burdwan Division—5.

1	Paresnath Das	.. Serampur College.
2	Tarakumar Chattopadhyay	.. Santiniketan College, Visva-Bharati.
3	Pranabnath Bhaduri	.. Howrah Narasinha Dutt College.
4	Phanindranath Bhattacharyya	.. Serampur College.
5	Amiyakrishna Kumar	.. Bankura College.

Dacca Division—2.

1	Santiranjan Dasgupta	.. Barisal B. M. College.
2	Harshanarayan Basu	.. Ditto.

Chittagong Division—2

1	Abanimohan Datta	.. Comilla Victoria College.
2	Nilmadhab Sen	.. Ditto.

Rajshahi Division—4.

1	Santoshkumar Chattopadhyay	.. Rangpur Carmichael College.
2	Mrityunjayprasad Guha	.. Rajshahi College.
3	Sunitikumar Bandyopadhyay	.. Rangpur Carmichael College.
4	Manojkumar Biswas	.. Cooch-Behar Victoria College.

Thirteen special scholarships for girls of Rs. 20 a month each.

1	Rama Sarkar	.. Bethune College.
2	Dipti Sarkar	.. Ditto.
3	Uma Bandyopadhyay, II	.. Ditto.
4	Indira Bandopadhyay	.. Scottish Church College.
5	Sudharani Kar	.. Victoria Institution.
6	Amiya Ray	.. Asutosh College.
7	Manika Chakrabarti	.. Ditto.
8	Uma Sanyal	.. Scottish Church College.
9	Gauri Datta	.. Asutosh College.
10	Sulochana Jagannath Nadkarni	.. Ditto.
11	Sandhyashashi Mookerji	.. Victoria Institution.
12	Asa Gangopadhyay	.. Asutosh College.
13	Archana Sen	.. Victoria Institution.

J. M. BOTTOMLEY,

Director of Public Instruction, Bengal.

Results of the Government Commercial Course Special Examinations, 1936.

Calcutta, the 19th June 1936.

(Arranged in order of roll numbers.)

CALCUTTA CENTRE.

Advanced Book-keeping.

Roll No. Name.

Private.

3 Bholanath Chatterjee.
7 Mahmud Ali Khan.

Government Commercial Institute, Calcutta.

9 Rajani Kumar Bhattacharjee.
10 A. Mahadevan.
11 Basudeb Mukherjee.

Private.

13 Bretherick Fred.

Government Commercial Institute, Calcutta.

18 Satya Charan Ghose.
19 Krishna Dhon Karmoker.
21 Bibhuti Bhusan Dutt.

Private.

22 Sudhirendra Nath Roy Choudhury.

The Commercial Academy, Calcutta.

23 M. S. Krishnamurti.

Premier Commercial College, Calcutta.

24 Susil Chand Sett.
26 Monoranjan Bandyopadhyay.

The Suburban Commercial College, Calcutta.

27 Samarendra Nath Roy Choudhury.

Institute of Commerce, Calcutta.

30 Narayandas Bhattacharjee.
32 Ranga Dhar Biswal.

Government Commercial Institute, Calcutta.

34 Ramesh Chandra Ghosh.

Institute of Commerce, Calcutta.

37 Sudhangsu Kumar Somadder.

Calcutta Commercial Institute.

41 Anath Bandhu Vedajna.
42 Chandra Shi.

Junior Book-keeping.

Private.

1 Abinas Chandra Basu.
2 Bimol Prosad Bose.

Private (Detenu, Detention Camp, Deoli).

3 Phanindra Nath Mukherjea.

Private.

5 Tarapada Bhattacherjee.
6 Suresh Chandra Seal.
7 Mukta Lall Chandra.
8 Promode Gopal Ghosh.

Government Commercial Institute, Calcutta.

10 Paresh Nath Pal.
11 Santi Kumar Banerjee.
12 Sachindra Kumar Paul.

Calcutta Commercial Institute.

14 Nabakumar Banerjee.

Government Commercial Institute, Calcutta.

15 Sisir Kumar Das Majumdar.

Private.

18 Tarak Das Mukherjee.

Government Commercial Institute, Calcutta.

19 Barendra Nath Chatterjee.

Private.

20 Chandy Charan Dutt.

Government Commercial Institute, Calcutta.

23 Bireswar Chatterjee.
24 Atul Krishna Datta.
25 Saileswor Mukerji.
26 Debendra Nath Sarker.
27 Himanshu Jiban Mitra.
29 Santosh Kumar Karok.
30 Rai Charan Mitra.
31 Hitendra Nath Chatterjee.
32 Beni Madho Tewari.
33 Anil Kumar Ghose.

Premier Commercial College, Calcutta.

35 Ajit Nath Das.
36 Abinash Chandra Nandi.

The Suburban Commercial College, Calcutta.

37 Chuni Lal Banerjee.
38 Satyajit Gupta.

Presidency Telegraph and Commercial College, Calcutta.

39 Kumarendra Nath Mukherji.

Institute of Commerce, Calcutta.

43 Bepin Behari Bhattacharjee.

Commercial Coaching Institute, Calcutta.

46 Ganesh Chandra Ghosh.
47 Jatindra Mohan Acharjea.
48 Bimal Kumar Dey.
49 Santosh Kumar Dutta.
50 Tridib Kanti Dey Biswas.

Government Commercial Institute, Calcutta.

52 Phanindra Nath Banerjee.
53 Chuni Lall Dawn.
59 Susil Kumar Biswas.
60 Nishith Kumar Sen Gupta.
63 Gour Lal Sen.

Nityananda Commercial School, Barrackpore.

65 Ram Hari Bandhu.
66 Romendro Nath Ghosh.

The Hardinge Commercial Institute, Calcutta.

67 Bishnu Pado Roy.

Institute of Commerce, Y.M.C.A., Calcutta.

69 Mohadeb Chandra Bhattacharyya.

The City Telegraph and Commercial College, Calcutta.

70 Bankim Chandra Sarkar.

Chatterjee's Commercial Institute, Calcutta.

72 Suresh Chandra Bhattacharjee.
74 Prafulla Nath Bhattacharjee.

Calcutta Commercial Institute.

77 Santosh Kumar Banerjee.
78 Sourendra Nath Roy.
79 Ananda Ram Bhattacharya.
80 Bijoli Bhuson Khamaru.
81 Ajoy Kumar Mukherjee.

Government Commercial Institute, Calcutta.

82 Nani Gopal Ganguly.

Shorthand.

(160 words per minute.)

Private.

3 Sudhir Chandra Roy.

Institute of Commerce, Calcutta.

56 T. K. S. Mani.

(140 words per minute.)

Maharaja Cossimbazar Commercial Institute, Calcutta.

100 Ramesh Chandra Marik.

(120 words per minute.)

The Commercial Academy, Calcutta.

27 Achyuta Nath Rai Chaudhury.

(100 words per minute.)

Private.

1 Liladhar Annaji Joshi.
2 Biswa Nath Roy.

Cann's Fonetik Skool, Calcutta.

5 Sachindra Nath Mitra.
6 Ram Nath Sarma.
14 Rabindra Nath Ganguly.

The Central Commercial Institute, Calcutta.

23 Ram Chandra Bhattacharjee.
24 Jyotirindra Mohan Deb.

The Commercial Academy, Calcutta.

30 Nirmal Sen.
34 Saktidas Mukherjee.

Premier Commercial College, Calcutta.

42 Amulya Chandra Mukherjee.
48 Panchu Gopal Mukherjee.

The Suburban Commercial College, Calcutta.

50 Rama Prosad Sen.
51 Umashankar Barai.
53 C. V. Subramanian.

Commercial Coaching Institute, Calcutta.

60 Jimutendra Nath Chatterjee.
67 Pankaj Kumar Chakrabortty.

Government Commercial Institute, Calcutta.

70 Ramendra Nath Datta.

The Hardinge Commercial Institute, Calcutta.

76 Pradyot Kumar Sanyal.

The Central School of Shorthand and Typewriting, Calcutta.

86 Moheswar Charan Byasack.
87 Sailendra Nath Mookerjee.

Maharaja Cossimbazar Commercial Institute, Calcutta.

104 Bhaba Ranjan Kundu.

Government Commercial Institute, Calcutta.

107 Amarendra Nath Mukherjee.

(80 words per minute.)

Cann's Fonetic Skool, Calcutta.

7 Sydney Theophilus Gomez.

Private.

13 Basanta Kumar Nan.

The Ideal Commercial Institute, Calcutta.

19 Tara Pada Sarcar.
20 Suhas Chandra Chatterjee.

The Commercial Academy, Calcutta.

26 Rasamay Banerjee.
31 Bhupendra Nath Sarkhel.
33 Santi Ram Mukerjee.
35 Keshub Chandra Banerji.

Premier Commercial College, Calcutta.

44 Sisir Kumar Mukherjee.
45 Sisir Kumar Biswas.
49 Hari Das Chattopadhyay.

Institute of Commerce, Calcutta.

58 Krishna Swarup Agarwalla.

Commercial Coaching Institute, Calcutta.

59 Nazrul Hasan Shah.
61 Bimalendu Gupta Sarma.
63 Munna Lal Chaturvedi.
64 Monoranjan Ghose.
65 Ram Dhone Chatterjee.

Nityananda Commercial School, Barrackpore.

71 Ramawtar Chandra.
75 Kamala Prosad Mukherjee.

The Hardinge Commercial Institute, Calcutta.

77 Kanai Lal Paul.

Calcutta Commercial Institute.

95 Bejoy Kumar Ghosh.

Typewriting.

(70 words per minute.)

Commercial Coaching Institute, Calcutta.

55 Nazrul Hasan Shah.
59 Munna Lal Chaturvedi.

The College of Wireless and Commerce, Calcutta.

91 Hara Nath Bhatttacharyya.

(65 words per minute.)

The Ideal Commercial Institute, Calcutta.

11 Hriday Prasad Nan.
12 Sarat Chandra Das.

Government Commercial Institute, Calcutta.

17 Shib Nath Chatterji.

Institute of Commerce, Calcutta.

43 T. K. S. Mani.

(60 words per minute.)

Bhowanipore Commercial College, Calcutta.

8 Kaliprosanna Bhattacharji.

The Commercial Academy, Calcutta.

27 Achyuta Nath Rai Chaudhury.

Institute of Commerce, Y.M.C.A., Calcutta.

45 Krishna Swarup Agarwalla.

Commercial Coaching Institute, Calcutta.

48 Sudhir Kumar Dutta.

The Hardinge Commercial Institute, Calcutta.

74 Ganesh Chandra Bhar.

(55 words per minute.)

The Commercial Academy, Calcutta.

31 Barendra Kumar Sen.
36 M. S. Krishnamurti.

Premier Commercial College, Calcutta.

[illegible] Probhas Kumar Dey.

Commercial Coaching Institute, Calcutta.

46 Tarak Chandra Bhattacharjya.

The Hardinge Commercial Institute, Calcutta.

75 Nripendra Chandra Ganguli.

(50 words per minute.)

Government Commercial Institute, Calcutta.

2 Bhola Nath Bandyopadhyay.

The Ideal Commercial Institute, Calcutta.

13 Sukumar Bhar.

The Commercial Academy, Calcutta.

26 Rasamay Banerjee.

Premier Commercial College, Calcutta.

38 Satyabrata Basu.

Commercial Coaching Institute, Calcutta.

52 Satya Charan Basak.

Suffee Commercial College, Calcutta.

67 Md. Kamaraizzaman.

Calcutta Commercial Institute.

101 Shib Kumar Basu.

(45 words per minute.)

Private.

4 M. U. Mahesham.

The Ideal Commercial Institute, Calcutta.

10 Gonesh Chandra Mittra.

Government Commercial Institute, Calcutta.

15 Mihirendu Prokash Basu.

The Commercial Academy, Calcutta.

28 Dina Bandhu Mukerjee.
35 Rabindra Nath Das.

Commercial Coaching Institute, Calcutta.

50 Nirmal Kumar Bose.
51 Radha Nath Panja.
57 Bimalendu Gupta Sarma.

Suffee Commercial College, Calcutta.

68 Satya Ranjan Chakravorty.

The Hardinge Commercial Institute, Calcutta.

77 Krishna Chandra Seal.

Government Commercial Institute, Calcutta.

102 Amarendra Nath Mukherjee.

(40 words per minute.)

The Ideal Commercial Institute, Calcutta.

14 Suhas Chandra Chatterjee.

The Central Commercial Institute, Calcutta.

19 Ram Chandra Bhattacharjee.
22 Herambo Kumar Chakravarty.

The Commercial Academy, Calcutta.

29 Saligram Singh.
32 Anil Kumer Simlai.
33 Krishno Dhon Mukherjea.

Commercial Coaching Institute, Calcutta.

49 Sudhir Krishna Basu.
54 Hirendra Nath Sarkar.
56 Jimutendra Nath Chatterjee.

Government Commercial Institute, Calcutta.

60 Phanindra Nath Banerjee.

The Hardinge Commercial Institute, Calcutta.

78 Rampada Kundoo.
79 Sushil Kumar Mukherjee.
81 Krishna Chandra Ghose.

The College of Wireless and Commerce, Calcutta.

88 Ajit Kumar Banerjee.

Presidency Telegraph and Commercial College, Calcutta.

98 Kalyan Kumar Ghosal.

Calcutta Commercial Institute.

109 Amarendra Nath Gupta.

(35 words per minute.)

Private.

5 Panchu Gopal Chakrabarty.

Govrnment Commercial Institute, Calcutta.

7 Sisir Kumar Das Majumder.
16 Himanshu Jiban Mitra.

The Central Commercial Institute, Calcutta.

21 Sarat Chandra Roy.
24 Madhu Sudan Chatterji.

Premier Commercial College, Calcutta.

37 Shiba Pada De.

The Suburban Commercial College, Calcutta.

40 Umashanker Barai.

Institute of Commerce, Calcutta.

42 Rebati Mohan Saha.

Commercial Coaching Institute, Calcutta.

47 Kali Das Paul.
58 Nitai Krishna Dutt.

Government Commercial Institute, Calcutta.

61 Manik Lal Paul.
62 Amulya Charan Chakraborty.
63 Nishith Kumar Sen Gupta.
65 Iskander Ali Chowdhury.

Suffee Commercial College, Calcutta.

66 Majibul Huq.

The Hardinge Commercial Institute, Calcutta.

76 Purnima Ranjan Ghosh.
80 Samorendra Nath Gupta

The Central School of Shorthand and Typewriting, Calcutta.

86 Dambar Bahadur Pradhan.

The College of Wireless and Commerce, Calcutta.

87 S. N. Doraiswamy.
89 Santosh Kumar Dey.

Institute of Commerce, Calcutta.

93 Lutfur Rahman.
94 Abdul Goffur.

The Commercial and Telegraph Training School, Mymensingh.

107 Kalyan Kumar Mazumdar.

DACCA CENTRE.

Advanced Book-keeping.

Private.

1 Promode Chandra Sen.

Junior Book-keeping.

Commercial Academy, Dacca.

121 Abaniswar Das.
124 Dhirendra Chandra Datta.
126 Rakhal Chandra Chakraborty.
127 Bankim Chandra De Sarker.
128 Jatindra Kumar Das.
130 Mukunda Kumar Bose.
131 Abdur Rabb.
132 Haradhan Ganguly.
133 Keshab Chandra Chakraborty.
134 Nripendra Nath Mitra.

Institute of Commerce, Dacca.

138 Kali Das Roy Gosthipaty.
144 Ratna Bhushon Chakrabortty.
149 Parikshit Chandra Barman.

Shorthand.

(80 words per minute.)

Commercial Academy, Dacca.

91 Amarendra Nath Banerjee.
92 Mohammed Abdul Aziz Khan.
93 Sudhansu Bhusan Dutta.
101 Amiya Kishore Roy.
105 Justin Augley

Institute of Commerce, Dacca.

140 Nalin Kanti Sengupta.

Commercial College, Mymensingh.

175 Sudhangshu Shekhar Choudhury.
176 Anil Kanta Neogi.

Commercial and Telegraph Training School, Mymensingh.

182 Bipul Chandra Ghose.

Typewriting.

(55 words per minute.)

Commercial College, Mymensingh.

159 Monindra Kumar Brahma.

(50 words per minute.)

Commercial College, Mymensingh.

168 Mono Ranjan Roy.

(45 words per minute.)

Commercial Academy, Dacca.

95 Aiswariya Kumar Sen Gupta.
98 Dhirendra Kumar Bhattacharyya.
107 Benode Behari De.
108 Jnanendranath Banerjee.
121 Abaniswar Das.
129 Dilip Kumar Dutt.

Commercial College, Mymensingh.

158 Sudhendra Mohon Chakraborty.

(40 words per minute.)

Commercial Academy, Dacca.

93 Sudhansu Bhusan Dutta.
100 Dhirendra Chandra Bhowmik.
101 Amiya Kishore Roy.
102 Himansu Mohan Ghose
103 Sailendra Chandra Chakravorty.
116 Kedareswar Dutta.
122 Hari Prasad Choudhury.
128 Jatindra Kumar Das.

Institute of Commerce, Dacca.

138 Kali Das Roy Gosthipaty.
143 Amarendra Chandra Mookherjee.
144 Ratna Bhuson Chakrabortty.
147 Pran Gopal Banik.

Commercial College, Mymensingh.

153 Prasanta Kumar Bagchi.

Commercial and Telegraph Training School, Mymensingh.

179 Monindra Mohan Kar.

(35 words per minute.)

Commercial Academy, Dacca.

96 Sujit Kumer Gupta.
97 Joga Jiban Dutta.
99 Paramesh Chandra Das.
111 Kali Das Sil.
112 Barindra Nath Chowdhury.
113 Pradip Kumar Datta.
114 Bidhu Bhushan Chakraborty.
115 Sudhir Kumar Mazumder.
117 Mohit Mohan Sen Gupta.
118 Nripendra Kumar Dhar.
119 Deva Ranjan Sen Gupta.
123 Tapash Chandra Nath.
125 Subodh Kumar Ganguly.

Institute of Commerce, Dacca.

140 Nalin Kanti Sengupta.
149 Parikshit Chandra Barman.

Commercial College, Mymensingh.

154 Digendranath Sen.
155 Md. Abdul Khaliq.
156 Niranjan Kumar Singha.
160 Tirtharaj Chakraborty.
162 Priya Sanker Majumder.
167 Jalil Uddin Ahamed.
169 Rammongal Tewari.
170 Himangshu Mohan Ghosh.
171 Himangsu Bhusan Roy.
173 A. S. M. Afsar Uddin.

Commercial and Telegraph Training School, Mymensingh.

177 Nidhir Chandra Sarker.
178 Promode Kanto Lahiri.

P. ROY, *Secretary*,

Government Commercial Institute Board.

Calcutta University.

Senate House, the 16th July 1936.

ERRATA.

In the list of successful candidates at the Matriculation Examination, 1936, published in the *Calcutta Gazette*, dated the 18 June, 1936 :—

(1) *on page 883, for*

" Cal. 719 *Kedia Mahabir Prasad (MLVMc) .. 15-9 First "

please read

" Cal. 719 *Kedia Mahabir Prasad (MLVmMc) 15-9 First ";

(2) *on page 886, for*

" Cal. 1218 Sunilkumar Chanda .. 16-11 First "

please read

" Cal. 1218 Sunilkumar Chandra .. 16-11 First ";

(3) *on page 889, for*

" Cal. 1945 Binaykrishna Chakrabarti .. 19-6 First "

please read

" Cal. 1945 Bijaykrishna Chakrabarti .. 19-6 First ";

(4) *on page 890, for*

" Cal. 2160 Phanibhushan Bandyopadhyay (LIG) 16-8 First "

please read

" Cal. 2160 Phanibhushan Bandyopadhyay (LIG) 16-3 First ";

(5) *on page 893, for*

" Cal. 2737 Syed Nural Arafin Md. Khorshed .. 17-1 Second "

please read

" Cal. 2737 Syed Nural Arafin Md. Khorshed Jamal 17-1 Second ";

(6) *on page 894, for*

" Cal. 2952 Bishwanath Babua (L) .. 14-3 First "

please read

" Cal. 2592 Bishwanath Bubua (L) .. 14-3 First ";

(7) *on page 901, for*

" Cal. 4462 Ramendranath Goswami .. 16-1 First "

please read

" Cal. 4462 Ranendranath Goswami .. 16-1 First ";

(8) *on page 905, for*

" Cal. P. 1 Bamangati Sengupta .. 16-10 Second "

please read

" Cal. P. 1 Bimangati Sengupta .. 16-10 Second ";

(9) *on page 906, for*

" Cal. P. 317 Syed Vicaqul Haque .. 16-2 Third "

please read

" Cal. P. 317 Syed Vicarul Hossain .. 16-2 Third ";

(10) *on page 907, for*

" Cal. P. 531 Jnanendranath Gupta .. 18-3 Third "

please read

" Cal. P. 531 Inendranath Gupta .. 18-3 Third "

(11) *on page 911, for*

" Bhow. 688 Muhammad Abbaden Rahman .. 17-2 First "

please read

" Bhow. 688 Muhammad Abbadur Rahman .. 17-2 First " ;

(12) *on page 923, for*

" Bar. 880 Kesablal Das .. 16-0 Second "

please read

" Bar. 880 Kesablal Datta .. 16-0 Second " ;

(13) *on page 926, for*

" Shi. 35 Rabindranath Bhattacharyya (Ll) .. 15-2 First "

please read

" Shi. 35 Ratindranath Bhattacharyya (Ll) .. 15-2 First " ;

(14) *on page 934, for*

" Bagh. 30 Susilkumar Ray .. 19-1 Second "

please read

" Bagh. 30 Sisirkumar Ray .. 19-1 Second " ;

(15) *on page 935, for*

" Bank. 102 Gopalkrishna Ray (m) .. 15-9 First "

please read

" Bank. 102 Gopikrishna Ray (m) .. 15-9 First " ;

(16) *on page 939, for*

" Ber. P. 96 Ghulam Nabi .. 17-2 Second "

please read

" Ber. P. 93 Ghulam Nabi .. 17-2 Second " ;

(17) *on page 942, for*

" Birb. 312 Umasankar Laha .. 18-11 Third " and
" Birb. 313 Sridanchandra Ghosh .. 16-5 First "

please read, respectively,

" Birb. 312 Umasankar Saha .. 18-11 Third " ; and
" Birb. 313 Sridamchandra Ghosh .. 16-5 First " ;

(18) *on page 950, for*

" Chi. 65 Sudhirchandra Pal .. 15-6 First "

please read

" Chi. 65 Subridchandra Pal .. 15-6 First " ;

(19) *on page 953, for*

" Chi. 702 Md. Kerem Nabi .. 18-0 Second "

please read

" Chi. 702 Md. Nurun Nabi .. 18-0 Second ";

(20) *on page 955, for*

"Com. 148 Swadesbhushan Dasgupta .. 19-1 Second "

please read

"Com. 148 Swadesbhushan Debgupta .. 19-1 Second " ;

(21) *on page 958, for*

"Cont. 111 Bidhubhushan Misra .. 16-9 Second "

please read

"Cont. 111 Bidhubhushan Mitra .. 16-9 Second " ;

(22) *on page 959, for*

"Coo. 38 Dhirendranath Sarkar (MmMc) .. 19-2 First "

please read

"Coo. 38 Dhirendranath Sarkar (MmMc) .. 16-2 First " ;

(23) *on page 960, for*

"Dar. T. 6 S. Abdul Wajeed Passed"

please read

"Dar. T. 6 S. Abdul Majeed .. Passed" ;

(24) *on page 968, for*

"How. 484 *Sudhirranjan Bandyopadhyay 15-11 First"
(MLmMc)

please read

"How. 484 * Sudhiranjan Bandyopadhyay 15-11 First" ;
(MLmMc)

(25) *on page 969, for*

"How. 516 Susilkumar Ghoshal .. 18-2 Second"

please read

"How. 516 Sunilkumar Ghoshal .. 18-2 Second" ;

(26) *on page 972, for*

"Jam. 77 S. M. Askar Ali .. 15-11 First"

please read

"Jam. 77 S. M. Askar Ali .. 15-1 First" ;

(27) *on page 974, for*

"Jheni. 14 Haricharan Ray .. 16-3 First"

please read

"Jheni. 14 Haricharan Bandyopadhyay 16-3 First" ;

(28) *on page 978, for*

" Kat. 138 Kamalapati Chattopadhyay (MmMc) 24-9 First"

please read

"Kat. 138 Kamalapati Chattopadhyay (MmMc) 14-9 First" ;

(29) *on page 983*

the entries bearing Roll numbers Kri. 76 to Kri. 90 should be read under the heading

"Nabadwip Bakultala H. E. School" ;

(30) *on page 990, for*

"Mid. 15 Pratapkumar Ray (LMc) .. 15-3 First"

please read

"Mid. 15 Pratipkumar Ray (LMc) .. 15-3 First" ;

(31) *on page 994, for*

"Mym. 55 Biswabandhab Bhattacharyya	..	16-1	Third" and
"Mym. 61 Adhires Niyogi (MLMl)	..	16-10	First"

please read, respectively,

"Mym. 55 Biswabandhu Bhattacharyya	..	16-1	Third" ; and
"Mym. 61 Adhires Niyogi (MLml)	..	16-10	First" ;

(32) *on page 997, for*

"Net. 22 Pijushkumar Gupta	..	18-5	Second"

please read

"Net. 22 Pijushkumar Datta	..	18-5	Second" ;

(33) *on page 1000, for*

"Babupur H. E. School

Noa. 247 Pareschandra Nag	..	19-2	Second"

" Babupur Jirtali Union H. E. School

Noa. 250 Pyarimohan Sur	..	16-4	Second,
Noa. 251 Bhupalchandra Majumdar	..	18	Second" and

"Babupur Jirtali Union H. E. School

Noa. 271 Md. Sabirullah	..	21-1	Third"

please read, respectively,

"Noa. P.	30	Pareschandra Nag	..	19-2	Second ;
	31	Pyarimohan Sur	..	16-4	First ;
	32	Bhupalchandra Majumdar	..	18	Second ;
	37	Md. Sabirullah	..	21-1	Third" ;

(the entries being read under the heading "Private Students" on the same page).

(34) *on page 1010, for*

"Seraj. 37 Jagannath Gangopadhyay (MLml)	..	14-11	First " and
"Seraj. 74 S. M. Naizul Huq	..	16-8	First"

please read, respectively,

"Seraj. 37 Jagannath Gangopadhyay (MLml)	..	14-11	First " ; and
"Seraj. 74 S. M. Faizul Huq	..	16-8	First" ;

(35) *on page 1014, for*

" Taki 176 Praneschandra Mallik	..	16-10	Second"

please read

"Taki 176 Prabhaschandra Mallik	..	16-10	Second".

2. In the list of successful candidates at the B.A. Examination, 1936, published in the *Calcutta Gazette*, dated the 25th June 1936, on page 1094—

for

"Tofazel Ahmed	..	Presidency College"

please read

"Tofayel Ahmed	..	Presidency College".

3. In the list of successful candidates at the I. A. Examination, 1936, published in the *Calcutta Gazette*, dated the 28th May 1936, on page 683—

for

"940 Kantaprasad Sharma	..	Vidyasagar College"

please read

"940 Kamtaprasad Sharma	..	Vidyasagar College".

B. B. DUTT,

Controller of Examinations.

Orders by the Vice-Chancellor and Syndicate of the Calcutta University.

Senate House, Calcutta, the 3rd July 1936.

NOTIFICATION No. T. 445.

I.A. and I.Sc. Examinations, 1938.

ENGLISH.

The following pieces from the Intermediate Poetical Selections (University Publication—latest edition) are prescribed to be read in English for the I.A. and I.Sc. Examinations in 1938:

Shakespeare. "When to the sessions of sweet silent thought."

Milton. (1) Paradise Lost, Book 1. (2) On his Blindness.

Coleridge. The Rime of the Ancient Mariner.

Wordsworth. (1) The Affliction of Margaret. (2) On the extinction of the Venetian Republic.

Shelley. "Rarely, rarely, comest thou."

Keats. (1) "To one who has been long in city pent." (2) The Terror of Death.

Tennyson. (1) Enoch Arden. (2) Song of the Lotos-Eaters.

R. Browning. The Melon-seller.

Thomas Hood. The Bridge of Sighs.

Thomas Hardy. The Darkling Thrush.

Robert Bridges. London Snow.

Wilfred Owen. The Send-off.

J. CHAKRAVORTI, *Registrar.*

Dacca Medical School.

Dacca, the 3rd July 1936.

Admission to the Compounders Class—Session, 1936-37.

Applications for admission to the Compounders Class of the Dacca Medical School will be received from 15th July to 10th August 1936.

Applications should be supported by (*a*) a true copy of certificate of passing the Matriculation or its accepted equivalent, (*b*) a testimonial of good moral character from a Deputy Magistrate or a gentleman of equal position or from the Principal or Head Master of the college or school in which the candidate last studied, (*c*) a certificate of age. Matriculation certificate or a certificate from the head of the institution in which the candidate last studied will also be accepted as evidence of age.

Applications from the candidates must reach the office of the Superintendent between 15th July and 10th August 1936 for registration of their names and they must attend for personal interview on the 17th August 1936, at 8 a.m., in the school, and bring with them the original certificates.

Late or incomplete applications will not be entertained

Every male student who is selected for admission shall pay an entrance fee of Rs. 4 and first half-yearly instalment of Rs. 12 as tuition fee. He shall also pay annual sports fee of Rs. 2.

R. LINTON, MAJOR, I.M.S.,

Superintendent, Dacca Medical School.

Registered No. C207

The Calcutta Gazette

THURSDAY, JULY 16, 1936.

PART II

Advertisements.

Notices

Advertisements, Notices, etc., intended for insertion in this part of the Gazette must be sent to Press before 12 noon on Saturday, and all costs deposited and proofs returned by 4 p.m. on Monday. Manuscripts and postal remittances must be addressed to Superintendent, Government Printing (Publication Branch), Bengal Government Press, Alipore.

For the convenience of advertisers located in Calcutta, arrangements have been made to accept advertisements and prepayment of charges Sales Office, Ground Floor, Writers' Buildings, Calcutta. The latest time for receipt of advertisements for current week's Gazette has been extended till 4 p.m. on Mondays.

SUMMONS FOR DISPOSAL OF SUIT.

(Order V, rules 1 and 5, Code of Civil Procedure.)

In the Court of the Deputy Collector at Deoghar, Santal Parganas.

MONEY SUIT No. 189 OF 1935.

To Hari Das Pal, Nani Sette's house, Darmahatta Street, Calcutta.

WHEREAS Kalicharan Chatterjee, at present Deputy Magistrate of Purulia, district Manbhum, has instituted a suit against you for Rs. 136 due on account of house rent and damages, you are hereby summoned to appear in this Court in person or by a pleader duly instructed, and able to answer all material questions relating to the suit or who shall be accompanied by some person able to answer all such questions on the 23rd day of July 1936 at 10·30 a.m. to answer the claim; and as the day fixed for your appearance is appointed for the final disposal of the suit, you must be prepared to produce on that day all the witnesses upon whose evidence and all the documents upon which you intend to rely in support of your defence.

Take notice that, in default of your appearance on the day before mentioned, the suit will be heard and determined in your absence.

Given under my hand and the seal of the Court this 9th day of June 1936.

S. A. ASHRAF, Deputy Collector.

(800—2)

In the Court of the Sub-Judge at Rangpur.

MONEY EXECUTION CASE No. 184 OF 1936.

Sailendra Nath Banerjee, Receiver to the estate of Gopi Ballav Sen and others, decree-holders

versus

Jogesh Gobinda Mazumdar of Gharinda, police-station Tangail, district Mymensingh, at present residing at Kanongotala, police-station Kotwali, district Rangpur, judgment-debtor.

Date of sale—3rd August 1936 at 12 noon.

Total claim—Rs. 14,192-4.

NOTICE is hereby given that the following revenue-paying zamindary property will be sold in the above-mentioned Execution Case in the Court of the Subordinate Judge of Rangpur in the sale room of the above Court on the date and hour mentioned above:—

Description of property.

In the district of Rangpur, tauzi No. 71 of the Rangpur Collectorate, mahal lot Matukpur Gayraha, the annual revenue in 16 annas share of which is Rs. 1,252-2-10 gandas—out of which the share of the judgment-debtor is 5 annas 6 pies—which is known as mauza Chhaola (Chhaula) and mauza Kabir Sardar (Kuber Sadar) Kisamat within the police-station Kotwali and mauza Matukpur within police-station Gangachara and mauza Jior Sadar (Jila Sadar) within police-station Pirgacha and mauza Kalikapur within police-station Kaliganj and mauza Sidheswari within police-station Jaldhaka within the subdivision of Nilphamari.

The valuation assessed by the Court is Rs. 2,000 only.

S. C. DE, Sub-Judge.

(1445—1)

Land Sale Notice.

FORM No. 27.

Advertisement for Sale.

NOTICE is hereby given that the undermentioned plots of land, no longer required by Government, situated to the north of the East Indian Railway, in the district of Howrah, will be put up to sale at 12 o'clock noon, on the 21st August 1936, corresponding with the 5th Bhadra, 1343 B.S.

The purchasers of the plots of land will be subject to the following conditions :—

1st.—If the amount of purchase money does not exceed Rs. 100, the whole amount must be paid down at once.

2nd.—If the amount of purchase money exceeds Rs. 100, one-fourth of the amount must be immediately deposited. If the balance be not paid by noon of the fifteenth day after the sale, reckoning the day of sale as one, or if that day be a close holiday, then by noon of the first succeeding office day, the sale shall be cancelled, the sum deposited being forfeited to Government and the lot again put up for sale at the risk of the defaulting purchaser, after issue of advertisement, as in the case of original sale.

3rd.—The plots of land will be sold revenue free to the highest bidders.

4th.—The sale will become final on receipt by the Collector of the orders of the Commissioner confirming it, and a regular conveyance will then be granted to the purchaser :—

Consecutive lot No.	Name of district.	Pargana and mauza.	Number of mile on which land is situate.	Situated on which side of the railway.	Approximate area of lot in acres and decimals.	Land excluded from sale from each lot.		Commencement and termination of lot.	Boundary of lot.
						Reasons for exclusion.	Acres and decimals.		
1	2	3	4	5	6	7		8	9
1	Howrah	Krishnachandrapur, pargana Boro.	..	To the north of the railway.	0·0130	..	..	....	North and South—Sitaram Sow. East—Municipal road (plot No 16). West—Jewanlal's Aluminium Factory (plot No. 18).
2	Do. ..	Ditto ..	..	Do. ..	0·0130	..	..	....	North—Tinkari Mondal and municipal drain (plot No. 21). East and South—Tinkari Mondal. West—Municipal drain (plot No. 21).

Howrah, the 7th July 1936.

S. C. RAY, *for* Collector.

In the Court of the Sub-Judge at Dinajpur.

MONEY EXECUTION CASE No. 50 OF 1936.

Jagdeo Panday and another, decree-holders

versus

Nirada Sundari Choudhurani, judgment-debtor.

Claim—Rs. 3,245-11.

Date of sale—3rd August 1936 at 12 noon.

THE right, title and interest of the judgment-debtor in the scheduled property will be sold in the sale room of the above Court on the date and hour specified above—

Schedule of property.

The 8 annas share of the judgment-debtor in tauzi No. 458, lat Parbatipur, of the Dinajpur Collectorate, pargana Hasiabangalipur, mauza Disbandi, police-station Nawabganj, mauzas Dhapakole and Parbatipur, police-station Parbatipur in the district of Dinajpur and mauzas Sonapur *alias* Sonapara, Nikardighi and Karai, police-station Panchbibi, in the district of Bogra, bearing annual land revenue of Rs. 1,624-7-10 pies in 16 annas share.

K. B. SEN, Sub-Judge.

Dinajpur, the 8th July 1936. (1449—1)

In the Court of the Sub-Judge at Dinajpur.

MONEY EXECUTION CASE No. 51 OF 1936.

Fulchand Pandey, decree-holder

versus

Nirada Sundari Choudhurani, judgment-debtor.

Claim—Rs. 4,871-15-9 pies.

Date of sale—3rd August 1936 at 12 noon.

THE right, title and interest of the judgment-debtor in the scheduled property will be sold in the sale room of the above Court on the date and hour specified above—

Schedule of property.

The 8 annas share of the judgment-debtor in tauzi No. 456, lat Ganga Prosad of the Dinajpur Collectorate, pargana Sashabir, mauzas Bistaib, Azimpur, Matian, Naldighi, Kirtarhar, Krishnaprosad, Panchpua-araji, Panchpua, Ganga Prosad, Rudrapur, Dahagram, Mahadebpur, Karnai, Parshuma, police-station Kotwali and mauzas Sibakrishnapur, Tikrail, Simulia, Kamarkhair, Chandura, Narail, Selimpur, Raghunathpur-araji, Raghunathpur Sahara, police-station Gangarampur, and mauza Manaharpara, police-station Balurghat in the district of Dinajpur, bearing annual land revenue of Rs. 5,031-15-7 pies in 16 annas share.

K. B. SEN, Sub-Judge.

Dinajpur, the 8th July 1936. (1450—1)

In the High Court of Judicature at Fort William in Bengal, in insolvency.

NOTICE OF ADJUDICATION ORDER.

No. 69 of 1936.

Re Mahadeo Acharaya, residing at No. 14, Upper Chitpore Road, in the town of Calcutta, and employed as a service-holder. Ex parte the creditor.

H. C. Banerjee and Co., creditor's solicitors.

ON the 16th day of June 1936, an order was made by the High Court of Judicature at Fort William in Bengal in its insolvency jurisdiction adjudging the above-named as an insolvent.

Note.—All debts due to the estate should be paid to me.

Dated this 8th day of July 1936.

G. M. FALKNER, Official Assignee.

In the High Court of Judicature at Fort William in Bengal, in insolvency.

NOTICE OF ADJUDICATION ORDER.

No. 84 of 1936.

Re Jhowerilal Damodar Harsorah, residing at and lately carrying on business at No. 9, Chittaranjan Avenue, in the town of Calcutta, as manufacturer and repairer of collapsible gates under the name and style of Bombay Collapsible Gate and Grill Manufacturing Company, and at present of no occupation, ex parte the debtor in person.

ON the 2nd day of July 1936, an order was made by the High Court of Judicature at Fort William in Bengal in its insolvency jurisdiction adjudging the abovenamed as an insolvent.

Note.—All debts due to the estate should be paid to me.

Dated this 8th day of July 1936.

G. M. FALKNER, Official Assignee.

In the High Court of Judicature at Fort William in Bengal, in insolvency.

NOTICE OF ADJUDICATION ORDER.

No. 89 of 1936.

Re Jotindra Nath Bose, residing at No. 49, Shambazar Street, in the town of Calcutta, of no occupation, lately practising as a Vakil of this Court, ex parte the debtor.

B. N. Dutt, debtor's solicitor.

ON the 3rd day of July 1936, an order was made by the High Court of Judicature at Fort William in Bengal in its insolvency jurisdiction adjudging the abovenamed as an insolvent.

Note.—All debts due to the estate should be paid to me.

Dated this 7th day of July 1936.

G. M. FALKNER, Official Assignee.

In the High Court of Judicature at Fort William in Bengal, in insolvency.

NOTICE OF ADJUDICATION ORDER.

No. 90 of 1936.

Re Robert Alexander D'Rozario, residing at No. 8-7-1, Hati Bagan Road, Entally, in the suburbs of the town of Calcutta, and employed as an Assistant in the New Empire Theatre at No. 1, Humayun Place, Chowringhee, in the town of Calcutta, ex parte the debtor in person.

ON the 4th day of July 1936, an order was made by the High Court of Judicature at Fort William in Bengal in its insolvency jurisdiction adjudging the abovenamed as an insolvent.

Note.—All debts due to the estate should be paid to me.

Dated this 7th day of July 1936.

G. M. FALKNER, Official Assignee.

In the High Court of Judicature at Fort William in Bengal, in insolvency.

No. 53 of 1935.

Re Cecil Jack Lister.

NOTICE is hereby given that a dividend is intended to be declared in the above estate. Persons claiming to be creditors in the above estate are required to file their claims, supported by affidavit and vouchers, on or before the 20th instant, after which date no claims received by the undersigned will be considered.

Persons who have already filed their claims need not lodge fresh claims.

A form of proof of debt may be had on application from the undersigned.

G. M. FALKNER, Official Assignee.

10, Old Post Office Street, Calcutta, the 10th July 1936.

(1448—1)

In the Court of the District Judge of Bankura.

INSOLVENCY CASE No. 6 OF 1933.

Falaram De of Bankura Town, district Bankura, insolvent.

NOTICE is hereby given to his creditors that the abovenamed insolvent has applied for his absolute discharge under section 41 of the Provincial Insolvency Act and that 14th August 1936 has been fixed for hearing thereof.

S. K. GANGULI, District Judge.

Bankura, the 8th July 1936. (1384—1)

In the Court of the District Judge of Bankura.

INSOLVENCY CASE No. 3 OF 1934.

Nilachal Samanta, son and heir of Surja Kumar Samanta, deceased, of Kenduadihi, police-station Bankura, district Bankura, insolvent.

NOTICE is hereby given to his creditors that the abovenamed insolvent has been finally discharged from insolvency by order of this Court, dated the 16th May 1936.

S. K. GANGULI, District Judge.

Bankura, the 6th July 1936. (1394—1)

In the Court of the District Judge at Bogra.

INSOLVENCY CASE No. 6 OF 1936.

WHEREAS the creditor Rangpur Coal Co., Ltd., of Nawabganj, Rangpur, police-station Kotwali, district Rangpur, has applied to this Court to declare the debtor Abdur Rahaman Paikar, son of late Foyez Mahammad Paikar, resident of Phulbari, police-station Kotwali, district Bogra, as an insolvent, this is to give notice to all his creditors that the Court has fixed 22nd July 1936 for hearing of the aforesaid petition and for examination of the debtor.

N. B. BANERJI, Ex-officio Registrar.

Bogra, the 9th July 1936.

(1446—1)

In the Court of the District Judge of Faridpur.

INSOLVENCY CASE No. 64 OF 1936.

Ramani Mohan Bhoumik, son of Nabadwip Chandra Bhoumik, of Choumukha, police-station Nagarkanda, district Faridpur, creditor-petitioner,

versus

Ajimaddi Matubbar, son of late Metalep Matubbar, of Kamdia, police-station Nagarkanda, district Faridpur, debtor, opposite party.

NOTICE is hereby given that the abovenamed creditor has prayed for having the abovenamed debtor adjudged insolvent and that the 5th August 1936 has been fixed for the hearing of the application.

K. B. ROY, District Judge.

Faridpur, the 26th June 1936. (1299—1)

In the Court of the District Judge of Faridpur.

INSOLVENCY CASE No. 69 OF 1936.

Sudhanya Kumar Saha, son of late Dina Nath Saha, of Jadurdia, police-station Nagarkanda, district Faridpur, creditor-petitioner,

versus

(1) Sheik Hatem, (2) Sheik Ajimaddin, (3) Baru Khatun, sons and daughter of late Sheik Baser, of Jadurdia, police-station Nagarkanda, district Faridpur, debtors, opposite party.

NOTICE is hereby given that the abovenamed creditor-petitioner has applied to this Court for having the debtors adjudged insolvents and that the 31st July 1936 has been fixed for the hearing of the application.

K. B. ROY, District Judge.

Faridpur, the 6th July 1936. (1391—1)

In the Court of the District Judge of Faridpur.

INSOLVENCY CASE No. 65 OF 1936.

Hadgi Rajjabali Matubbar, son of late Nandu Matubbar, of Bahadurpur, police-station Sibchar, district Faridpur, debtor-petitioner.

NOTICE is hereby given that the abovenamed debtor-petitioner has applied to this Court for being adjudged insolvent and that the 24th July 1936 has been fixed for the hearing of the application.

K. B. ROY, District Judge.

Faridpur, the 6th July 1936. (1392—1)

In the Court of the District Judge of Faridpur.

INSOLVENCY CASE No. 66 OF 1936.

Madan Mohan Bhowmik, son of Jaladhar Bhoumik, of Choumukha, police-station Nagarkanda, district Faridpur, creditor-petitioner,

versus

(1) Nabin Chandra Malo, (2) Jaladhar Malo, sons of late Ram Nath Malo, of Meherdia, (3) Ananta Mohan Malo, (4) Debnath Malo, sons of late Dina Nath Malo, of Choumukha, police-station Nagarkanda, district Faridpur, debtors, opposite party.

NOTICE is hereby given that the abovenamed creditor-petitioner has applied to this Court for having the debtors adjudged insolvents and that the 1st August 1936 has been fixed for the hearing of the application.

K. B. ROY, District Judge.

Faridpur, the 6th July 1936. (1393—1)

In the Court of the District Judge of Hooghly.

NOTICE is hereby given, under clause (2) of section 12 of the Provincial Insolvency Act, V of 1920, to his creditors that the insolvency petition of Nanilal Hazra, son of late Ram Charan Hazra, of Dogachia, thana Jangipara, district Hooghly, has been admitted by this Court as No. 51 of 1936, and that the 18th July 1936 has been fixed for the hearing thereof.

S. SEN, District Judge.

Chinsura, the 30th June 1936. (1359—1)

In the Court of the District Judge of Hooghly.

INSOLVENCY PETITION No. 19 OF 1936.

NOTICE is hereby given that Haripada Samanta and Makhanlal Samanta, sons of late Dayal Chandra Samanta, of Nandanpur, thana Khanakul, district Hooghly, was on the 2nd July 1936 adjudged insolvents. The 3rd October 1936 has been fixed for framing a schedule and creditors are required to prove their claims on that day.

S. SEN, District Judge.

Chinsura, the 3rd July 1936. (1396—1)

In the Court of the District Judge of Hooghly.

INSOLVENCY CASE No. 56 OF 1936.

NOTICE is hereby given, under clause (2) of section 12 of the Provincial Insolvency Act, V of 1920, that the creditor Sm. Probhabati Dasi has applied to have the debtors Banku Behari Das, Gour Dhan Das and Dhajahari Das, sons of late Haridas Das, of Kumragori, thana Chanditola, district Hooghly, declared insolvents, and that the 25th July 1936 has been fixed for the hearing thereof.

S. SEN, District Judge.

Chinsura, the 4th July 1936. (1397—1)

In the Court of the District Judge of Hooghly.

INSOLVENCY CASE No. 57 OF 1936.

NOTICE is hereby given, under clause (2) of section 12 of the Provincial Insolvency Act, V of 1920, that the creditor Sm. Provabati Dassi has applied for declaring insolvents of the debtors Kissori Mohan Dey, Brindaban Chandra Dey, Naratam Das Dey, Batto Kristo Dey, Hari Prosad Dey and Bholanath Dey, sons of Nando Gopal Dey, of Begumpore, thana Chanditala, district Hooghly, and that the 25th July 1936 has been fixed for the hearing thereof.

S. SEN, District Judge.

Chinsura, the 4th July 1936. (1398—1)

In the Court of the Addl. District Judge of Hooghly at Howrah.

NOTICE is hereby given under the Provincial Insolvency Act, V of 1920, to his creditors that the insolvency petition of Jugal Chandra Hazra, son of late Kura Ram Hazra, of Jhikhira, thana Amta, district Howrah, has been admitted by this Court as No. 94 of 1936, and that the 31st July 1936 has been fixed for the hearing thereof.

S. N. GUHA RAY, Addl. District Judge.

Howrah, the 6th July 1936. (1395—1)

In the Court of the District Judge of Pabna-Bogra.

INSOLVENCY CASE No. 16 OF 1936.

NOTICE is hereby given that Kokon Chandra Karmakar of Mirzapur, police-station Bera, district Pabna, has applied before this Court for an order of adjudication against his debtor Eusufuddin Miah, son of late Mozaharuddin Miah, of Char Lakshmipur, police-station Bera, district Pabna, and the 30th July 1936 has been set down for hearing of the case in this Court.

S. N. MODAK, District Judge.

Pabna, the 10th July 1936. (1451—1)

In the Court of the District Judge of Rajshahi.

INSOLVENCY CASE No. 13 OF 1936.

NOTICE is hereby given that Suresh Chandra Sanyal, son of late Radha Sundar Sanyal, of Balihar, police-station Naogaon, district Rajshahi, was on the 20th day of June 1936 adjudicated an insolvent and directed to apply for final discharge in six months.

S. K. GUPTA, District Judge.

Rajshahi, the 10th July 1936. (1452—1)

NOTICE TO CREDITORS OF APPLICATION FOR DISCHARGE.

Section 41 (1) of the Provincial Insolvency Act, V of 1920.

In the 4th Court of the Sub-Judge at Alipore.

INSOLVENCY CASE No. 150 OF 1935.

Robert Dugald Withworth King of 76, Traffic Quarters, Sealdah, 24-Parganas, applicant.

TAKE notice that the abovenamed insolvent has applied at the Court for his discharge, and that the Court has fixed the 17th day of August 1936, at 11 o'clock, for hearing the application.

Dated this 8th day of July 1936.

S. P. BOSE, Sub-Judge.

(1399—1)

NOTICE TO CREDITORS OF APPLICATION FOR DISCHARGE.

Section 41 (1) of the Provincial Insolvency Act, V of 1920.

In the 4th Court of the Sub-Judge at Alipore.

INSOLVENCY CASE No. 341 OF 1935.

Atul Chandra Das of 100, Manicktola Main Road, police-station Manicktola, 24-Parganas, applicant.

TAKE notice that the abovenamed insolvent has applied at the Court for his discharge, and that the Court has fixed the 10th day of August 1936, at 11 o'clock, for hearing the application.

Dated this 30th day of June 1936.

B. P. GHOSH, Sub-Judge-in-charge.

(1400—1)

NOTICE TO CREDITORS OF APPLICATION FOR DISCHARGE.

Section 41 (1) of the Provincial Insolvency Act, V of 1920.

In the 4th Court of the Sub-Judge at Alipore.

INSOLVENCY CASE No. 362 OF 1935.

Rakhal Chandra Dalui of Naihaty, Banerjeepara, 24-Parganas, applicant.

TAKE notice that the abovenamed insolvent has applied at the Court for his discharge, and that the Court has fixed the 10th day of August 1936, at 11 o'clock, for hearing the application.

Dated this 6th day of July 1936.

S. P. BOSE, Sub-Judge.

(1401—1)

NOTICE TO CREDITORS OF APPLICATION FOR DISCHARGE.

Section 41 (1) of the Provincial Insolvency Act, V of 1920.

In the 4th Court of the Sub-Judge at Alipore.

INSOLVENCY CASE No. 409 OF 1935.

Ajodhya Sha Kanu of Standard Jute Mill, Titagarh, 24-Parganas, applicant.

TAKE notice that the abovenamed insolvent has applied at the Court for his discharge, and that the Court has fixed the 3rd day of August 1936, at 11 o'clock, for hearing the application.

Dated this 30th day of June 1936.

B. P. GHOSH, Sub-Judge-in-charge.

(1402—1)

In the 4th Court of the Sub-Judge of 24-Parganas.

INSOLVENCY CASE No. 263 OF 1936.

Thaira Chamar of 40, Gopalnagore Road, Alipore, 24-Parganas, applicant.

To Buddhu Dosad of 33/1, Mohim Halder Street, Calcutta, and others, creditors.

ON the 25th day of June 1936 it was ordered that the matter of the petition of the applicant be heard on the 10th day of August 1936, and that the said applicant do attend to be examined by this Court on that date.

S. P. BOSE, Sub-Judge.

Alipore, the 6th July 1936. (1403—1)

In the 4th Court of the Sub-Judge of 24-Parganas.

INSOLVENCY CASE No. 267 OF 1936.

Moni Mohan Chatterjee of Baduria, police-station Baduria, 24-Parganas, applicant.

To Chowgaon Banking Corporation of 44-2, Lansdowne Road, Calcutta, and others, creditors.

ON the 22nd day of June 1936 it was ordered that the matter of the petition of the applicant be heard on the 3rd day of August 1936, and that the said applicant do attend to be examined by this Court on that date.

S. P. BOSE, Sub-Judge.

Alipore, the 6th July 1936. (1404—1)

In the 4th Court of the Sub-Judge of 24-Parganas.

INSOLVENCY CASE No. 276 OF 1936.

Shaik Bulla of Ghasit Khan's House, Purano Bazar, Titagarh, 24-Parganas, applicant.

To Saraju Tewary Bariwala of Purano Bazar, post-office Titagarh, 24-Parganas, and others, creditors.

ON the 20th day of June 1936 it was ordered that the matter of the petition of the applicant be heard on the 3rd day of August 1936, and that the said applicant do attend to be examined by this Court on that date.

B. P. GHOSH, Sub-Judge-in-charge.

Alipore, the 30th June 1936. (1405—1)

In the 4th Court of the Sub-Judge of 24-Parganas.

INSOLVENCY CASE No. 278 OF 1936.

Sridhar Chandra Bibu of 64, Prince Anwarsha Road, Tollygunj, 24-Parganas, applicant.

To Dost Muhammad Khan of 23, Russa Road, South, Tollygunj, 24-Parganas, and others, creditors.

ON the 20th day of June 1936 it was ordered that the matter of the petition of the applicant be heard on the 3rd day of August 1936, and that the said applicant do attend to be examined by this Court on that date.

B. P. GHOSH, Sub-Judge-in-charge.

Alipore, the 30th June 1936. (1406—1)

In the 4th Court of the Sub-Judge of 24-Parganas.

INSOLVENCY CASE No. 279 OF 1936.

Khursed Ahmad of Chandar, police-station Behala, 24-Parganas, applicant.

To Mahabir Prasad of 252, Lake Road suburb of Calcutta, and others, creditors.

ON the 20th day of June 1936 it was ordered that the matter of the petition of the applicant be heard on the 3rd day of August 1936, and that the said applicant do attend to be examined by this Court on that date.

B. P. GHOSH, Sub-Judge-in-charge.

Alipore, the 30th June 1936. (1407—1)

In the 4th Court of the Sub-Judge of 24-Parganas.

INSOLVENCY CASE No. 280 OF 1936.

S. M. Ayub Nasim of 8, Patuapara Lane, police-station Beliaghata, 24-Parganas, applicant.

To B. N. Singha Roy of 115, Lower Circular Road, Calcutta, and others, creditors.

ON the 22nd day of June 1936 it was ordered that the matter of the petition of the applicant be heard on the 3rd day of August 1936, and that the said applicant do attend to be examined by this Court on that date.

B. P. GHOSH, Sub-Judge-in-charge.

Alipore, the 30th June 1936. (1408—1)

In the 4th Court of the Sub-Judge of 24-Parganas.

INSOLVENCY CASE No. 281 OF 1936.

Shaik Aijuddin of Crematorium Street, Beniapukur, 24-Parganas, applicant.

To Ram Lall Show of 21-1 Koreya Bazar Road, Calcutta, and others, creditors.

ON the 22nd day of June 1936 it was ordered that the matter of the petition of the applicant be heard on the 3rd day of August 1936, and that the said applicant do attend to be examined by this Court on that date.

S. P. BOSE, Sub-Judge.

Alipore, the 6th July 1936. (1409—1)

In the 4th Court of the Sub-Judge of 24-Parganas.

INSOLVENCY CASE No. 282 OF 1936.

Harihar Singh of 33-1, Sastitola Road, Narikeldanga, police-station Beliaghata, 24-Parganas, applicant.

To Tarini Mohan Saha of New Market, Block Nos. 6 and 7, North Range, Stewart Hogg Market, Calcutta, and others, creditors.

ON the 22nd day of June 1936 it was ordered that the matter of the petition of the applicant be heard on the 3rd day of August 1936, and that the said applicant do attend to be examined by this Court on that date.

B. P. GHOSH, Sub-Judge-in-charge.

Alipore, the 30th June 1966. (1410—1)

In the 4th Court of the Sub-Judge of 24-Parganas.

INSOLVENCY CASE No. 284 OF 1936.

Jogesh Chandra Burman of Khorda, police-station Diamond Harbour, 24-Porganas, applicant.

To Bhowanipore Wards' Estate, Alipore, and others, creditors.

ON the 22nd day of June 1936 it was ordered that the matter of the petition of the applicant be heard on the 3rd day of August 1936, and that the said applicant do attend to be examined by this Court on that date.

S. P. BOSE, Sub-Judge.

Alipore, the 6th July 1936. (1411—1)

In the 4th Court of the Sub-Judge of 24-Parganas.

INSOLVENCY CASE No. 285 OF 1936.

Belata Earana of Kelvin Jute Mill, Titagarh, 24-Parganas, applicant.

To Larotty Parama of Kelvin Jute Mill Line, Titagarh, 24-Parganas, and others, creditors.

ON the 22nd day of June 1936 it was ordered that the matter of the petition of the applicant be heard on the 3rd day of August 1936, and that the said applicant do attend to be examined by this Court on that date.

B. P. GHOSH, Sub-Judge-in-charge.

Alipore the 30th June 1936. (1412—1)

In the 4th Court of the Sub-Judge of 24-Parganas.

INSOLVENCY CASE No. 286 OF 1936.

Haripada Nandan of 36E, Beninandan Street, police-station Bhowanipore, 24-Parganas, applicant.

To Balai Chand Dutt of 194, Rashbehari Avenue, post-office Kalighat, Calcutta, and others, creditors.

ON the 23rd day of June 1936 it was ordered that the matter of the petition of the applicant be heard on the 10th day of August 1936, and that the said applicant do attend to be examined by this Court on that date.

S. P. BOSE, Sub-Judge.

Alipore the 6th July 1936. (1413—1)

In the 4th Court of the Sub-Judge of 24-Parganas.

INSOLVENCY CASE No. 289 OF 1936.

Bhagatram Mistry of Fatehpur, Akshoy Kanan, police-station Muchikhola, 24-Parganas, applicant.

To Surajmal Marwari of Fatehpur, Garden Reach, post-office Metiaburuz, 24-Parganas, and others, creditors.

ON the 25th day of June 1936 it was ordered that the matter of the petition of the applicant be heard on the 10th day of August 1936, and that the said applicant do attend to be examined by this Court on that date.

S. P. BOSE, Sub-Judge.

Alipore, the 6th July 1936. (1414—1)

In the 4th Court of the Sub-Judge of 24-Parganas.

INSOLVENCY CASE No. 290 OF 1936.

Haricharan Sadhukhan of 3, Kalabagan, Manicktola, 24-Parganas, applicant.

To Sm. Nistarini Dasi of 30, Sahitya Parisad Street, Calcutta, creditor.

ON the 29th day of June 1936 it was ordered that the matter of the petition of the applicant be heard on the 10th day of August 1936, and that he said applicant do attend to be examined by this Court on that date.

S. P. BOSE, Sub-Judge.

Alipore the 7th July 1936. (1415—1)

In the 4th Court of the Sub-Judge of 24-Parganas.

INSOLVENCY CASE No. 291 OF 1936.

Lal Chand Chaudhury of 37, Linton Street, Beniapukur, 24-Parganas, applicant.

To Santosh Kumar Das and others of 43, Linton Street, Calcutta, creditors.

ON the 25th day of June 1936 it was ordered that the matter of the petition of the applicant be heard on the 10th day of August 1936, and that the said applicant do attend to be examined by this Court on that date.

S. P. BOSE, Sub-Judge.

Alipore, the 6th July 1936. (1416—1)

In the 4th Court of the Sub-Judge of 24-Parganas.

INSOLVENCY CASE No. 292 OF 1936.

Lakshman Pashi of Mudiali 1st Lane, police-station Metiaburuz, 24-Parganas, applicant.

To Kanailal Agarwala of Metiaburuz, Garden Reach, 24-Parganas, and others, creditors.

ON the 25th day of June 1936 it was ordered that the matter of the petition of the applicant be heard on the 10th day of August 1936, and that the said applicant do attend to be examined by this Court on that date.

S. P. BOSE, Sub-Judge.

Alipore, the 7th July 1936. (1417—1)

In the 4th Court of the Sub-Judge of 24-Parganas.

INSOLVENCY CASE No. 293 OF 1936.

Khetra Gopal Pandit of Panditpara, Jaynagore, 24-Parganas, applicant.

To Annapurna Dasi of Sikdarpara Lane, Calcutta, and others, creditors.

ON the 26th day of June 1936 it was ordered that the matter of the petition of the applicant be heard on the 10th day of August 1936, and that the said applicant do attend to be examined by this Court on that date.

B. P. GHOSH, Sub-Judge-in-charge.

Alipore, the 30th June 1936. (1418—1)

In the 4th Court of the Sub-Judge of 24-Parganas.

INSOLVENCY CASE No. 294 OF 1936.

Narayan Bhusan Biswas of 4-1, Nilmoni Mitter Road, police-station Chitpur, 24-Parganas, applicant.

To Jyotish Chandra Banerjee of Imperial Bank of India, Strand Road, Calcutta, and others, creditors.

ON the 27th day of June 1936 it was ordered that the matter of the petition of the applicant be heard on the 10th day of August 1936, and that the said applicant do attend to be examined by this Court on that date.

S. P. BOSE, Sub-Judge.

Alipore, the 2nd July 1936. (1419—1)

In the 4th Court of the Sub-Judge of 24-Parganas.

INSOLVENCY CASE No. 295 OF 1936.

Surendranath Mondal of Dhakuria, police-station Tollygunge, 24-Parganas, applicant.

To B. K. Dutt & Co. of 8-1, Hospital Street, Calcutta, and others, creditors.

ON the 27th day of June 1936 it was ordered that the matter of the petition of the applicant be heard on the 10th day of August 1936, and that the said applicant do attend to be examined by this Court on that date.

S. P. BOSE, Sub-Judge.

Alipore, the 6th July 1936. (1420—1)

In the 4th Court of the Sub-Judge of 24-Parganas.

INSOLVENCY CASE No. 296 OF 1936.

Md. Ismail Chaudhury of 3, Dent Mission Road, Kidderpore, 24-Parganas, applicant.

To Gour Chandra Poddar and Ramesh Chandra Poddar of 46-1, Watgunj Street, Calcutta, and others, creditors

ON the 27th day of June 1936 it was ordered that the matter of the petition of the applicant be heard on the 10th day of August 1936, and that the said applicant do attend to be examined by this Court on that date.

S. P. BOSE, Sub-Judge.

Alipore, the 6th July 1936. (1421—1)

In the 4th Court of the Sub-Judge of 24-Parganas.

INSOLVENCY CASE No. 297 OF 1936.

Batalia Mallayya of 17, Kenneson Jute Mill Line, Titagrah, 24-Parganas, applicant.

To Jadu Chuneat of Telipara Jute Mill New Line, Hooghly, and others, creditors

ON the 29th day of June 1936 it was ordered that the matter of the petition of the applicant be heard on the 10th day of August 1936, and that the said applicant do attend to be examined by this Court on that date.

S. P. BOSE, Sub-Judge.

Alipore, the 7th July 1936. (1422—1)

In the 4th Court of the Sub-Judge of 24-Parganas.

INSOLVENCY CASE No. 298 OF 1936.

Mrs. B. Hazlam of 30, Convent Road, police-station Entally, 24-Parganas, applicant.

To Alim Khan, Korim Khan and others, of 2, Prinsep Street, Calcutta, creditors.

ON the 29th day of June 1936 it was ordered that the matter of the petition of the applicant be heard on the 10th day of August 1936, and that the said applicant do attend to be examined by this Court on that date.

S. P. BOSE, Sub-Judge.

Alipore, the 7th July 1936. (1423—1)

In the 4th Court of the Sub-Judge of 24-Parganas.

INSOLVENCY CASE No. 299 OF 1936.

Ekadasi Gain of Peepulat, Diamond Harbour, 24-Parganas, applicant.

To Aghore Nath Halder of Gondalberia, Diamond Harbour, 24-Parganas, and others, creditors.

ON the 29th day of June 1936 it was ordered that the matter of the petition of the applicant be heard on the 10th day of August 1936, and that the said applicant do attend to be examined by this Court on that date.

S. P. BOSE, Sub-Judge.

Alipore, the 7th July 1936. (1424—1)

In the 4th Court of the Sub-Judge of 24-Parganas.

INSOLVENCY CASE No. 302 OF 1936.

Ramjan Mondal of Suria, police-station Habra, 24-Parganas, applicant.

To Rajabali Mondal of Sadhanpur, post-office Arkhali Amdanga, 24-Parganas, and others, creditors.

ON the 3rd day of July 1936 it was ordered that the matter of the petition of the applicant be heard on the 17th day of August 1936, and that the said applicant do attend to be examined by this Court on that date.

S. P. BOSE, Sub-Judge.

Alipore, the 6th July 1936. (1425—1)

In the 4th Court of the Sub-Judge of 24-Parganas.

INSOLVENCY CASE No. 304 OF 1936

S. DeTorres of 46, Nazir Lane, Kidderpore, 24 Parganas, applicant.

To Lachmi Narayan Bajpai of 1-1, Sandel Street, Calcutta, and others, creditors.

ON the 4th day of July 1936 it was ordered that the matter of the petition of the applicant be heard on the 17th day of August 1936, and that the said applicant do attend to be examined by this Court on that date.

S. P. BOSE, Sub-Judge.

Alipore, the 6th July 1936. (1426—1)

ORDER OF ADJUDICATION.

Section 27 of the Provincial Insolvency Act, V of 1920.

In the 4th Court of the Sub-Judge at Alipore.

INSOLVENCY APPLICATION No. 35 OF 1936.

PURSUANT to a petition, dated 30th January 1936, filed by Probhat Mittra of Baguiati, police-station Rajarhat, 24-Parganas, debtor, and on the application of the debtor himself and on reading his application and hearing his pleader, it is ordered that the debtor be and the said debtor is hereby adjudged insolvent.

It is further ordered that the debtor do apply for his discharge within 4th January 1937.

Dated this 2nd day of July 1936.

S. P. BOSE, Sub-Judge.

(1427—1)

ORDER OF ADJUDICATION.

Section 27 of the Provincial Insolvency Act, V of 1920.

In the 4th Court of the Sub-Judge at Alipore.

INSOLVENCY APPLICATION No. 96 OF 1936.

PURSUANT to a petition, dated 29th February 1936, filed by Shashi Bhusan Rakshit of 51-1, Moyerpore Road, police-station Alipore, 24-Parganas, debtor, and on the application of the debtor himself and on reading his application and hearing his pleader, it is ordered that the debtor be and the said debtor is hereby adjudged insolvent.

It is further ordered that the debtor do apply for his discharge within 15th February 1937.

Dated this 13th day of June 1936.

S. C. CHAKRABARTTY, Sub-Judge.

(1428—1)

ORDER OF ADJUDICATION.

Section 27 of the Provincial Insolvency Act, V of 1920.

In the 4th Court of the Sub-Judge at Alipore.

INSOLVENCY APPLICATION No. 131 OF 1936.

PURSUANT to a petition, dated 19th March 1936, filed by B. Jacquet of 23, Sarat Ghose Street, Intally, 24-Parganas, debtor, and on the application of the debtor himself and on reading his application and hearing his pleader, it is ordered that the debtor be and the said debtor is hereby adjudged insolvent.

It is further ordered that the debtor do apply for his discharge by 5th January 1937.

Dated this 29th day of June 1936.

S. P. BOSE, Sub-Judge.

(1429—1)

ORDER OF ADJUDICATION.

Section 27 of the Provincial Insolvency Act, V of 1920.

In the 4th Court of the Sub-Judge at Alipore.

INSOLVENCY APPLICATION No. 184 OF 1936.

PURSUANT to a petition, dated 21st April 1936, filed by Satish Chandra Chakravarty of 10, Manicktola Road, police-station Beliaghata, 24-Parganas, debtor, and on the application of the debtor himself and on reading his application and hearing his pleader, it is ordered that the debtor be and the said debtor is hereby adjudged insolvent.

It is further ordered that the debtor do apply for his discharge within six months from this date.

Dated this 29th day of June 1936.

S. P. BOSE, Sub-Judge.

(1430—1)

ORDER OF ADJUDICATION.

Section 27 of the Provincial Insolvency Act, V of 1920.

In the 4th Court of the Sub-Judge at Alipore.

INSOLVENCY APPLICATION No. 196 OF 1936.

PURSUANT to a petition, dated 25th April 1936, filed by Sailendranath Sarkar of Panapukur, police-station Bhangore, 24-Parganas, debtor, and on the application of the debtor himself and on reading his application and hearing his pleader, it is ordered that the debtor be and the said debtor is hereby adjudged insolvent.

It is further ordered that the debtor do apply for his discharge by 5th January 1937.

Dated this 29th day of June 1936.

S. P. BOSE, Sub-Judge.

(1431—1)

ORDER OF ADJUDICATION.

Section 27 of the Provincial Insolvency Act, V of 1920.

In the 4th Court of the Sub-Judge at Alipore.

INSOLVENCY APPLICATION No. 202 OF 1936.

PURSUANT to a petition, dated 26th April 1936, filed by Krishna Chandra Shaw of 4-26-1, Barawaritolla Road, police-station Beliaghata, 24-Parganas, debtor, and on the application of the debtor himself and on reading his application and hearing his pleader, it is ordered that the debtor be and the said debtor is hereby adjudged insolvent.

It is further ordered that the debtor do apply for his discharge within 4th January 1937.

Dated this 2nd day of July 1936.

S. P. BOSE, Sub-Judge.

(1432—1)

ORDER OF ADJUDICATION.

Section 27 of the Provincial Insolvency Act, V of 1920.

In the 4th Court of the Sub-Judge at Alipore.

INSOLVENCY APPLICATION No. 204 OF 1936.

PURSUANT to a petition, dated 29th April 1936, filed by Amritalal Sarkar of 17-1, Annada Banerjee Lane, police-station Bhowanipore, 24-Parganas, debtor, and on the application of the debtor himself and on reading his application and hearing his pleader, it is ordered that the debtor be and the said debtor is hereby adjudged insolvent.

It is further ordered that the debtor do apply for his discharge by 5th January 1937.

Dated this 29th day of June 1936.

S. P. BOSE Sub-Judge.

(1433—1)

ORDER OF ADJUDICATION.

Section 27 of the Provincial Insolvency Act, V of 1920.

In the 4th Court of the Sub-Judge at Alipore.

INSOLVENCY APPLICATION No. 66 OF 1936.

PURSUANT to a petition, dated 14th February 1936, filed by Upendra Nath Gora of 112 Lot, Durbachati, Plot No. II, Radhakrishnanagore, 24-Parganas, debtor, and on the application of the debtor himself and on reading his application and hearing his pleader, it is ordered that the debtor be and the said debtor is hereby adjudged insolvent.

It is further ordered that the debtor do apply for his discharge within 6th January 1937.

Dated this 6th day of July 1936.

S. P. BOSE, Sub-Judge.

(1434—1)

ORDER OF ADJUDICATION.

Section 27 of the Provincial Insolvency Act, V of 1920.

In the 4th Court of the Sub-Judge at Alipore.

INSOLVENCY APPLICATION No. 199 OF 1936.

PURSUANT to a petition, dated 26th April 1936, filed by Sk. Mohammad Ali of 20, Tanti Bagan Lane, police-station Entally, 24-Parganas, debtor, and on the application of the debtor himself and on reading his application and hearing his pleader, it is ordered that the debtor be and the said debtor is hereby adjudged insolvent.

It is further ordered that the debtor do apply for his discharge within 6th January 1937.

Dated this 6th day of July 1936.

S. P. BOSE, Sub-Judge.

(1435—1)

ORDER OF ADJUDICATION.

Section 27 of the Provincial Insolvency Act, V of 1920.

In the 4th Court of the Sub-Judge at Alipore.

INSOLVENCY APPLICATION No. 200 OF 1936.

PURSUANT to a petition, dated 28th April 1936, filed by Syed Mehdi Hossain *alias* Syed Sadek Hossain of 39, Mominpore Road, police-station Ekbalpore, 24-Parganas, debtor, and on the application of the debtor himself and on reading his application and hearing his pleader, it is ordered that the debtor be and the said debtor is hereby adjudged insolvent.

It is further ordered that the debtor do apply for his discharge within 6th January 1937.

Dated this 6th day of July 1936.

S. P. BOSE, Sub-Judge.

(1436—1)

ORDER OF ADJUDICATION.

Section 27 of the Provincial Insolvency Act, V of 1920.

In the 4th Court of the Sub-Judge at Alipore.

INSOLVENCY APPLICATION No. 201 OF 1936.

PURSUANT to a petition, dated 28th April 1936, filed by Jajneswar Ganguly of 93, Raja Rajendralal Mitra Road, police-station Beliaghata, 24-Parganas, debtor, and on the application of the debtor himself and on reading his application and hearing his pleader, it is ordered that the debtor be and the said debtor is hereby adjudged insolvent.

It is further ordered that the debtor do apply for his discharge within 6th January 1937.

Dated this 6th day of July 1936.

S. P. BOSE, Sub-Judge.

(1437—1)

ORDER OF ADJUDICATION.

Section 27 of the Provincial Insolvency Act, V of 1920.

In the 4th Court of the Sub-Judge at Alipore.

INSOLVENCY APPLICATION No. 207 OF 1936.

PURSUANT to a petition, dated 30th April 1936, filed by Samiruddin Goldar of Khurigachi, police-station Amdanga, 24-Parganas, debtor, and on the application of the debtor himself and on reading his application and hearing his pleader, it is ordered that the debtor be and the said debtor is hereby adjudged insolvent.

It is further ordered that the debtor do apply for his discharge within 6th January 1937.

Dated this 6th day of July 1936.

S. P. BOSE, Sub-Judge.

(1438—1)

ORDER OF ADJUDICATION.

Section 27 of the Provincial Insolvency Act, V of 1920.

In the 4th Court of the Sub-Judge at Alipore.

INSOLVENCY APPLICATION No. 211 OF 1936.

PURSUANT to a petition, dated 4th May 1936, filed by Ram Ganesh Bhujawala of 7-7, Lakshminarayan Gully, Watgunj, 24-Parganas, debtor, and on the application of the debtor himself and on reading his application, and hearing his pleader, it is ordered that the debtor be and the said debtor is hereby adjudged insolvent.

It is further ordered that the debtor do apply for his discharge within 6th January 1937.

Dated this 6th day of July 1936.

S. P. BOSE, Sub-Judge.

(1439—1)

ORDER OF ADJUDICATION.

Section 27 of the Provincial Insolvency Act, V of 1920.

In the 4th Court of the Sub-Judge at Alipore.

INSOLVENCY APPLICATION No. 219 OF 1936.

PURSUANT to a petition, dated 8th May 1936, filed by Narendra Nath Banerjee of 81, Barrackpore Trunk Road, police-station Cossipore, 24-Parganas, debtor, and on the application of the debtor himself and on reading his application and hearing his pleader, it is ordered that the debtor be and the said debtor is hereby adjudged insolvent.

It is further ordered that the debtor do apply for his discharge within 6th January 1937.

Dated this 6th day of July 1936.

S. P. BOSE, Sub-Judge.

(1440—1)

ORDER ANNULLING ADJUDICATION.

Section 43 of the Provincial Insolvency Act, V of 1920.

In the 4th Court of the Sub-Judge at Alipore.

INSOLVENCY APPLICATION No. 85 OF 1926.

Rakhal Chandra Das Rajak, applicant.

WHEREAS Rakhal Chandra Das Rajak of Nadial, Metiaburuz, 24-Parganas, debtor, does neither appear nor apply for discharge within the specified time, it is ordered that the order of adjudication, dated 25th January 1927, against the debtor be and the same is hereby annulled.

Dated this 17th day of June 1936.

S. P. BOSE, Sub-Judge.

ORDER ANNULLING ADJUDICATION.

Section 43 of the Provincial Insolvency Act, V of 1920.

In the 4th Court of the Sub-Judge at Alipore.

INSOLVENCY APPLICATION No. 183 of 1935.

Habibal Hossain, applicant.

WHEREAS Habibal Hossain of North Kazipara, Baraset, 24-Parganas, debtor, does neither appear nor apply for his discharge within the specified time, it is ordered that the order of adjudication, dated 26th November 1935, against the debtor be and the same is hereby annulled.

Dated this 8th day of June 1936.

P. N. CHAUDHURI, Sub-Judge.

ORDER ANNULLING ADJUDICATION.

Section 43 of the Provincial Insolvency Act, V of 1920.

In the 4th Court of the Sub-Judge at Alipore.

INSOLVENCY APPLICATION No. 279 OF 1935.

Sheik Lal Mohammad, applicant.

WHEREAS Sheik Lal Mohammad of 45, Nazir Lane, Kidderpore, 24-Parganas, debtor, does neither appear nor apply for discharge within the specified time, it is ordered that the order of adjudication, dated 20th December 1935, against the debtor be and the same is hereby annulled.

Dated this 20th day of June 1936.

B. P. GHOSH, Sub-Judge-in-charge.

ORDER ANNULLING ADJUDICATION.

Section 43 of the Provincial Insolvency Act, V of 1920.

In the 4th Court of the Sub-Judge at Alipore.

INSOLVENCY APPLICATION No. 333 OF 1935.

Lasman Chaudhury, applicant.

WHEREAS Lasman Chaudhury of 15, Fern Road, Ballygunge, 24-Parganas, debtor, does not proceed with his application for discharge, it is ordered that the order of adjudication, dated 16th December 1935, against the debtor be and the same is hereby annulled.

Dated this 24th day of June 1936.

S. C. CHAKRABARTTY, Sub-Judge.

ORDER ANNULLING ADJUDICATION.

Section 43 of the Provincial Insolvency Act, V of 1920.

In the 4th Court of the Sub-Judge at Alipore.

INSOLVENCY APPLICATION No. 360 OF 1935.

Hira Saw, applicant.

WHEREAS Hira Saw of Jagaddal Katchari Road, police-station Jagaddal, 24-Parganas, debtor, does neither appear nor apply for discharge within the specified time, it is ordered that the order of adjudication, dated 30th November 1935, against the debtor be and the same is hereby annulled.

Dated this 8th day of June 1936.

P. N. CHAUDHURI, Sub-Judge.

ORDER ANNULLING ADJUDICATION.

Section 43 of the Provincial Insolvency Act, V of 1920.

In the 4th Court of the Sub-Judge at Alipore.

INSOLVENCY APPLICATION No. 407 OF 1935.

Sris Chandra Sen, applicant.

WHEREAS Sris Chandra Sen of Pottery Road, Entally, 24-Parganas, debtor, does neither appear nor apply for discharge within the specified time, it is ordered that the order of adjudication, dated 20th December 1935, against the debtor be and the same is hereby annulled.

Dated this 20th day of June 1936.

S. C. CHAKRABARTTY, Sub-Judge.

ORDER ANNULLING ADJUDICATION.

Section 43 of the Provincial Insolvency Act, V of 1920.

In the 4th Court of the Sub-Judge at Alipore.

INSOLVENCY APPLICATION No. 410 OF 1935.

Sheik Abdul Majid, applicant.

WHEREAS Sheik Abdul Majid of 99-3, Cossipore Road, Cossipore, 24-Parganas, debtor, does neither appear nor apply for discharge within the specified time, it is ordered that the order of adjudication, dated 10th December 1935, against the debtor be and the same is hereby annulled.

Dated this 25th day of June 1936.

S. C. CHAKRABARTTY, Sub-Judge.

ORDER ANNULLING ADJUDICATION.

Section 43 of the Provincial Insolvency Act, V of 1920.

In the 4th Court of the Sub-Judge at Alipore.

INSOLVENCY APPLICATION No. 414 OF 1935.

Kunja Behary Chaudhury, applicant.

WHEREAS Kunja Behary Chaudhury of Itabhati, police-station Matla, 24-Parganas, debtor, does neither appear nor apply for discharge within the specified time, it is ordered that the order of adjudication, dated 10th December 1935, against the debtor be and the same is hereby annulled.

Dated this 10th day of June 1936.

S. P. BOSE, Sub-Judge.

In the Court of the District Judge of 24-Parganas.

INSOLVENCY CASE No. 22 OF 1936.

S. M. Jafri of 24-9-4, Kakurgachi Road, Narikeldanga, 24-Parganas, applicant.

To Jahanara Begum *alias* Miss Kajjan of 226, Circular Avenue, Calcutta, and others, creditors.

ON the 2nd day of July 1936 it was ordered that the matter of the petition of the applicant be heard on the 3rd day of August 1936, and that the said applicant do attend to be examined by this Court on that date.

T. H. ELLIS, District Judge.

Alipore, the 7th July 1936. (1390—1)

NOTICE TO CREDITORS OF APPLICATION FOR DISCHARGE.

Section 41 (*l*) of the Provincial Insolvency Act, V of 1920.

In the Court of the District Judge at Alipore.

INSOLVENCY CASE No. 13 OF 1935.

Abdul Samad Majlis of 27, Convent Road, Entally, 24-Parganas, applicant.

TAKE notice that the abovenamed insolvent has applied at the Court for his discharge, and that the Court has fixed the 10th day of August 1936, at 11 o'clock, for hearing the application.

Dated this 8th day of July 1936.

T. H. ELLIS, District Judge.

(1441—1)

NOTICE TO CREDITORS OF APPLICATION FOR DISCHARGE.

Section 41(*l*) of the Provincial Insolvency Act, V of 1920.

In the Court of the District Judge at Alipore.

INSOLVENCY CASE No. 23 OF 1935.

Mohommed Eachin of 1, Gobra Gorasthan Lane, police-station Benapukur, 24-Parganas, applicant.

TAKE notice that the abovenamed insolvent has applied at the Court for his discharge, and that the Court has fixed the 10th day of August 1936, at 11 o'clock, for hearing the application.

Dated this 8th day of July 1936.

T. H. ELLIS, District Judge.

(1442—1)

In the Court of the District Judge of 24-Parganas.

INSOLVENCY CASE No. 23 OF 1936.

K. A. Dupley of 14-B, Gorachand Road, police-station Beniapukur, 24-Parganas, applicant.

To Rameswar Chokhani of 7, Lyons Range, Calcutta, and others, creditors.

ON the 8th day of July 1936 it was ordered that the matter of the petition of the applicant be heard on the 10th day of August 1936, and that the said applicant do attend to be examined by this Court on that date.

B. M. MITRA, District Judge.

Alipore, the 10th July 1936. (1454—1)

WANTED temporarily for six months with every prospect of being made permanent an experienced Head Clerk and Accountant for the office of the District Engineer of Pabna on a salary of Rs. 100—5—150 per month. None need apply who is not a passed accountant or a graduate in Commerce Examination under the rules. Preference will be given to those who have got previous experience in the District Engineer's office works or P. W. D. office works. Applications stating age, qualifications, past services, native village and district of the candidates with copies of certificates will be received by the undersigned up to the 30th July 1936. The selected candidate will have to join at once and will not get any joining travelling allowance.

A. R. MAHMOOD, Chairman, District Board.

Pabna, the 2nd July 1936. (1370—3)

WE hereby notify, for the information of the public, that by virtue of an agreement, by mutual consent, have dissolved the partnership in the Manohar Film Distributing Company, Calcutta, Bombay Delhi and Lahore, and the said agreement has this 20th day of June 1936 been filed in the suit filed by the said Radha Kishan Ram Kishan against parties of the Manohar Film Distributing Company in the Court of L. Sardari Lal, Sub-Judge, 1st Class, Amritsar.

BRIJ LAL BHATIA, *for* self and

JAMANLAL BHATIA, and

MURLIDHAR BHATIA, *for* Chunilal Keshodas.

Amritsar, the 20th June 1936. (1368—1)

THE Bengal and Madras Service Family Pension Fund which is provisionally managed and assisted by Government has for its object the provision of monthly pensions for the maintenance of the widows and children of subscribers and is open, with certain exceptions, to all active and pensioned members of the Uncovenanted service of Government (except those serving under the Government of Bombay), and to Local Fund servants earning pensions from Government. Some of the special features of the fund are (1) that widowed daughters incapable of re-marriage or children labouring under such mental or bodily infirmities as incapacitate them from earning their livelihood or preclude the possibility of marriage (in case of a daughter) are admitted to its benefits; and (2) that subscribers to the Widows and Daughters' branches are entitled to a refund of 30 per cent. of the premia paid, should the nominee predecease them after five years of admission. The second quinquennial valuation of the Fund has been completed by the Actuary to the Government of India, and his report discloses very favourable results. For forms of application and rules of the Fund apply to the Accountant-General, Bengal, Imperial Secretariat Buildings, Calcutta.

Notice under section 10A of Act IX (B.C.) of 1879.

WHEREAS under sections 7 and 35 of the Court of Wards Act, IX (B.C.) of 1879, as amended up to date, the Court of Wards has assumed charge of the property of Babus Ram Prasad Sen and his brothers of mauza Radhaballabh situated in the district of Rangpur.

Notice is hereby given under section 10A of the said Act that all creditors having claims against the said estate of Babu Ram Prasad Sen and his brothers or his immoveable property are hereby required to submit the same in writing to the Collector of Rangpur within six months from the date of publication of this notice.

Creditors are hereby warned that claims not submitted, as required by the notice, are liable to be deemed to have been duly discharged.

H. C. SEN, Wards Deputy Collector.

Rangpur, the 17th June 1936. (1281—3)

Notice to creditors under section 10-A of Act IX (B.C.) of 1879.

WHEREAS on the death of Sreejukta Lakshmi Kamini Sen, widow of late Nabin Chandra Sen, Ward of Court, the Board has declared by its order No. 7622-W., dated 28th May 1936, her only son and heir Mr. Nirmal Chandra Sen, Bar.-at-Law, Rangoon, a disqualified proprietor under clause (*c*) of section 6 of the Court of Wards Act and has decided to retain the property under its charge which is already in its possession.

Notice is hereby given under section 10-A of the said Act that all creditors having claims against the said Mr. Nirmal Chandra Sen or his immovable property are hereby required to submit the same in writing to the Collector of Chittagong at his office at Chittagong within six months from the date of publication of this notice.

Creditors are also hereby warned that claims not submitted as required by this notice are liable to be deemed to have been duly discharged and ceased to carry interest.

M. B. DUTTA, Wards Deputy Collector *for* Collector.

Chittagong, the 11th July 1936. (1453—1)

Estate Rudyard Kipling, deceased.

PURSUANT to section 360 of Act XXXIX of 1925 and section 42 of Act XXVIII of 1866, the creditors and all persons interested in the estate of Rudyard Kipling, late of Batemans, Burwash, in the County of Sussex in England, who died at the Middlesex Hospital in the County of Middlesex, on the 18th day of January 1936, and Letters of Administration to whose estate were granted by the High Court, Calcutta, on the 16th day of June 1936, are hereby required to submit particulars of their claims to the undersigned on or before the 16th day of August 1936, after which date the Administrator will distribute the assets, having regard only to the claims of which notice shall then have been received.

ORR, DIGNAM & CO.,
Solicitors to the Administrator.

32, Dalhousie Square, South, Calcutta,
The 8th July 1936. (1447—1)

Estate John Brown, deceased.

PURSUANT to section 360 of Act XXXIX of 1925 and section 42 of Act XXVIII of 1866, the creditors and all persons interested in the estate of John Brown, late of Chief Mining Engineer's Office, Sijua post office, district Manbhum, Bihar and Orissa, who died at Loyabad, sub-district Dhanbad district Manbhum, on the 30th day of January 1936, and Letters of Administration to whose estate were granted by the High Court, Calcutta, on the 19th day of June 1936, are hereby required to submit particulars of their claims to the undersigned on or before the 19th day of August 1936, after which date the Administrator will distribute the assets, having regard only to the claims of which notice shall then have been received.

ORR, DIGNAM & Co., Solicitors to the Administrator.

32, Dalhousie Square, South, Calcutta, the 10th July 1936. (1456—1)

Destroyed Receipt.

A RECEIPT numbered 14789, dated 9th September 1935, and granted by the Reserve Bank of India, Public Debt Office, on submission of the undermentioned Government Promissory Note. Notice of loss has been given to the Reserve Bank of India, Public Debt Office, and the undersigned is about to apply for surrender of the security :—

G. P. Note No.	Loan.	Amount.	Holder's name.
218200	3½ per cent., 1842-43.	Rs. 100	Murari Churn Law.

Name of the proprietor—Murari Churn Law.

Residence—121, Muktaram Babu Street, Calcutta.

(1444—1)

IN THE HIGH COURT OF JUDICATURE AT FORT WILLIAM IN BENGAL.

Ordinary Original Civil Jurisdiction.

In the matter of the Indian Companies Act

and

In the matter of Madan Theatres, Ltd.

NOTICE is hereby given that a petition for the winding up of the abovenamed Company by the High Court of Judicature at Fort William in Bengal was on the 18th day of January 1936 presented to the said Court by Messrs. Manohar Film Distributing Company of No. 12, Raja Woodmunt Street, Calcutta, a creditor of the Company, and that the said petition is directed to be heard before the Court on the 3rd day of August 1936, and any creditor or contributory of the said Company desirous of opposing an order for the winding up of the said Company under the above Act should appear at the time of hearing by himself or his attorney or advocate for that purpose; and a copy of the petition will be furnished to any creditor or contributory of the said Company requiring the same by the undersigned on payment of prescribed charge for the same.

Dated the 10th day of July 1936.

MUKHERJEE & BISWAS,
Attorneys for the petitioners,
1B, Old Post Office Street, Calcutta.

Note.—Rule 41 provides that any person who intends to appear on the hearing of the said petition must serve on or send by post to the abovenamed notice in writing of his intention so to do. The notice must state the name and address of the person, or, if a firm, the name and address of the firm, and must be served, or, if posted, must be sent by post in sufficient time to reach the abovenamed not later than two clear days before the 3rd day of August 1936.

(1455—1)

In the matter of the Indian Companies Acts, 1913-20,

and

In the matter of Anstroo, Limited (in voluntary liquidation).

NOTICE is hereby given that at an extraordinary general meeting of the members of the abovenamed Company duly convened and held at No. 5, Fairlie Place, Calcutta, on Tuesday, the 30th day of June 1936, the following resolution was passed as a special resolution :—

"That the Company be wound up voluntarily and that Mr. Frederick Graham Roberts and Mr. John Grant of Messrs. Graham Roberts & Co., Chartered Accountants, 5, Fairlie Place, Calcutta, be and they are hereby appointed liquidators for the purpose of such winding up with joint and several powers at such remuneration (if any) as may be agreed between them and the shareholders."

I. C. MOUNTAIN,
Chairman.

5, Fairlie Place, Calcutta, the 4th July 1936.

(1386—1)

In the matter of the Indian Companies Acts, 1913-20,

and

In the matter of Anstroo, Limited (in voluntary liquidation).

NOTICE is hereby given, pursuant to section 209 of the Indian Companies Act, 1913, that a meeting of the creditors of the abovenamed Company will be held at 5, Fairlie Place, Calcutta, on the 29th day of July 1936, at 11-30 a.m.

F. GRAHAM ROBERTS,
JOHN GRANT,
Liquidators.

5, Fairlie Place, Calcutta, the 4th July 1936.

(1387—1)

In the matter of the Indian Companies Acts, 1913-20,

and

In the matter of Millhoo, Limited (in voluntary liquidation).

NOTICE is hereby given that at an extraordinary general meeting of the members of the abovenamed Company duly convened and held at No. 5, Fairlie Place, Calcutta, on Tuesday, the 30th day of June 1936, the following resolution was passed as a special resolution :—

"That the Company be wound up voluntarily and that Mr. Frederick Graham Roberts and Mr. John Grant of Messrs. Graham Roberts & Co., Chartered Accountants, 5, Fairlie Place, Calcutta, be and they are hereby appointed liquidators for the purpose of such winding up with joint and several powers at such remuneration (if any) as may be agreed between them and the shareholders."

I. C. MOUNTAIN,
Chairman.

5, Fairlie Place, Calcutta, the 30th June 1936.

(1388—1)

In the matter of the Indian Companies Acts, 1913-20,

and

In the matter of Millhoo, Limited (in voluntary liquidation).

NOTICE is hereby given, pursuant to section 209 of the Indian Companies Act, 1913, that a meeting of the creditors of the abovenamed Company will be held at No. 5, Fairlie Place, Calcutta, on the 29th day of July 1936, at 11 a.m.

F. GRAHAM ROBERTS,
JOHN GRANT,
Liquidators.

5, Fairlie Place, Calcutta, the 30th June 1936. (1389—1)

Descriptive Catalogue of Sanskrit Manuscripts.

PARTS I, II and III of a Descriptive Catalogue of the Sanskrit Manuscripts in the Library of the Calcutta Sanskrit College, prepared by Pandit Hrishikesh Sastri and Babu Siva Chandra Gui, M.A., B.L., of that College, are offered to the public for sale. The Catalogue having to be completed in 23 parts the price of each part is 12 annas a copy exclusive of postage. Copies can be obtained from the Principal of the Sanskrit College, Calcutta.

Imperial Library.

Secretariat Buildings, 6, Esplanade East, Calcutta.

Open on—

Week days and Saturdays from 10 a.m. to 7 p.m.
Sundays and Gazetted holidays from 2 p.m. to 5 p.m.

THE Imperial Library is also a Lending Library. It is free to all except children. There is no subscription to pay.

K. M. ASADULLAH, Librarian.

Registered No. C207

The Calcutta Gazette

THURSDAY, JULY 16, 1936.

PART V

Acts of the Indian Legislature assented to by the Governor-General and Ordinances promulgated under section 72 of the Government of India Act.

GOVERNMENT OF INDIA.

Legislative Department.

The following Act of the Indian Legislature received the assent of the Governor General on the 23rd April, 1936, and is hereby promulgated for general information :—

ACT No. III OF 1936.

An Act to amend the law relating to marriage and divorce among Parsis.

WHEREAS it is expedient to amend the law relating to marriage and divorce among Paris ; It is hereby enacted as follows :—

I.—PRELIMINARY.

Short title, extent and commencement.

1. (*1*) This Act may be called the Parsi Marriage and Divorce Act, 1936.

(2) It extends to the whole of British India and, in respect of Parsi subjects of His Majesty, to the whole of India :

Provided that the Governor General in Council may, in respect of territories in India beyond the limits of British India, by notification in the Gazette of India, direct that the provisions of this Act relating to the constitution and powers of Parsi Matrimonial Courts and to appeals from the decisions and orders of such Courts shall apply with such modifications as may be specified in the notification.

(*3*) It shall come into force on such date as the Governor General in Council may, by notification in the Gazette of India, appoint.

Definitions.

2. In this Act, unless there is anything repugnant in the subject or context,—

(*1*) "Chief Justice" includes senior Judge;

(*2*) "Court" means a Court constituted under this Act;

(*3*) to "desert," together with its grammatical variations and cognate expressions, means to desert the other party to a marriage without reasonable cause and without the consent, or against the will, of such party;

(*4*) "grievous hurt" means—

(*a*) emasculation;

(*b*) permanent privation of the sight of either eye;

(*c*) permanent privation of the hearing of either ear;

(*d*) privation of any member or joint;

(*e*) destruction or permanent impairing of the powers of any member or joint;

(*f*) permanent disfiguration of the head or face; or

(*g*) any hurt which endangers life;

(*5*) "husband" means a Parsi husband;

(*6*) "marriage" means a marriage between Parsis whether contracted before or after the commencement of this Act;

(*7*) a "Parsi" means a Parsi Zoroastrian;

(*8*) "priest" means a Parsi priest and includes Dastur and Mobed; and

(*9*) "wife" means a Parsi wife.

II.—MARRIAGES BETWEEN PARSIS.

Requisites to validity of Parsi marriages.

3. No marriage shall be valid if—

(*a*) the contracting parties are related to each other in any of the degrees of consanguinity or affinity set forth in Schedule I; or

(*b*) such marriage is not solemnized according to the Parsi form of ceremony called "Ashirvad" by a priest in the presence of two Parsi witnesses other than such priest, or

(*c*) in the case of any Parsi (whether such Parsi has changed his or her religion or domicile or not) who has not completed the age of twenty-one years, the consent of his or her father or guardian has not been previously given to such marriage.

Remarriage when unlawful.

4. (*1*) No Parsi (whether such Parsi has changed his or her religion or domicile or not) shall contract any marriage under this Act or any other law in the lifetime of his or her wife or husband, whether a Parsi or not, except after his or her lawful divorce from such wife or husband or after his or her marriage with such wife or husband has lawfully been declared null and void or dissolved, and, if the marriage was contracted with such wife or husband under the Parsi Marriage and Divorce Act, 1865, or under this Act, except after a divorce, declaration or dissolution as aforesaid under either of the said Acts. XV of 1865.

(*2*) Every marriage contracted contrary to the provisions of sub-section (*1*) shall be void.

Punishment of bigamy.

5. Every Parsi who during the lifetime of his or her wife or husband, whether a Parsi or not, contracts a marriage without having been lawfully divorced from such wife or husband or without his or her marriage with such wife or husband having legally been declared null and void or dissolved, shall be subject to the penalties provided in sections 494 and 495 of the Indian Penal Code for the offence of marrying again during the lifetime of a husband or wife. XLV of 1860.

Certificate and registry of marriage.

6. Every marriage contracted under this Act shall, immediately on the solemnization thereof, be certified by the officiating priest in the form contained in Schedule II. The certificate shall be signed by the said priest, the contracting parties, or their fathers or guardians when they shall not have completed the age of twenty-one years, and two witnesses present at the marriage; and the said priest shall thereupon send such certificate together with a fee of two rupees to be paid by the husband to the Registrar of the place at which such marriage is solmenized. The Registrar on receipt of the certificate and fee shall enter the certificate in a register to be kept by him for that purpose and shall be entitled to retain the fee.

Appointment of Registrar.

7. For the purposes of this Act a Registrar shall be appointed. Within the local limits of the ordinary original civil jurisdiction of a High Court, the Registrar shall be appointed by the Chief Justice of such Court, and without such limits, by the Local Government. Every Registrar so appointed may be removed by the Chief Justice or Local Government appointing him.

Marriage register to be open for public inspection.

8. The register of marriages mentioned in section 6 shall, at all reasonable times, be open for inspection, and certified extracts therefrom shall, on application, be given by the Registrar on payment to him by the applicant of two rupees for each such extract. Every such register shall be evidence of the truth of the statements therein contained.

Copy of certificate to be sent to Registrar-General of Births, Deaths and Marriages.

9. Every Registrar, except the Registrar appointed by the Chief Justice of the High Court of Judicature at Bombay, shall at such intervals as the Local Government by which he was appointed from time to time directs, send to the Registrar-General of Births, Deaths and Marriages for the territories administered by such Local Government a true copy certified by him in such form as such Local Government from time to time prescribes, of all certificates entered by him in the said register of marriages since the last of such intervals.

Registration of divorces.

10. When a Court passes a decree for divorce, nullity or dissolution, the Court shall send a copy of the decree for registration to the Registrar of Marriages within its jurisdiction appointed under section 7; the Registrar shall enter the same in a register to be kept by him for the purpose, and the provisions of Part II applicable to the Registrars and registers of marriages shall be applicable, so far as may be, to the Registrars and registers of divorces and decrees of nullity and dissolution.

Penalty for solemnizing marriage contrary to section 4.

11. Any priest knowingly and wilfully solemnizing any marriage contrary to and in violation of section 4 shall, on conviction thereof, be punished with simple imprisonment for a term which may extend to six months, or with fine which may extend to two hundred rupees, or with both.

Penalty for priest's neglect of requirements of section 6.

12. Any priest neglecting to comply with any of the requisitions affecting him contained in section 6 shall, on conviction thereof, be punished for every such offence with simple imprisonment for a term which may extend to three months, or with fine which may extend to one hundred rupees, or with both.

Penalty for omitting to subscribe and attest certificate.

13. Every other person required by section 6 to subscribe or attest the said certificate who shall wilfully omit or neglect so to do, shall, on conviction thereof, be punished for every such offence with a fine not exceeding one hundred rupees.

Penalty for making, etc., false certificate.

14. Every person making or signing or attesting any such certificate containing a statement which is false, and which he either knows or believes to be false, shall be punished with simple imprisonment for a term which may extend to three months, or with fine which may extend to one hundred rupees, or with both; and if the act amounts to forgery as defined in the Indian Penal Code, then such person shall also be liable, on conviction thereof, to the penalties provided in section 466 of the said Code. XIV of 1860.

Penalty for failing to register certificate.

15. Any Registrar failing to enter the said certificate pursuant to section 6 shall be punished with simple imprisonment for a term which may extend to one year, or with fine which may extend to one thousand rupees, or with both.

Penalty for secreting, destroying or altering register.

16. Any person secreting, destroying or dishonestly or fraudulently altering the said register in any part thereof, shall be punished with imprisonment of either description as defined in the Indian Penal Code for a term which may extend to two years, or if he be a Registrar, for a term which may extend to five years and shall also be liable to fine which may extend to five hundred rupees. XIV of 1860.

Formal irregularity not to invalidate marriage.

17. No marriage contracted under this Act shall be deemed to be invalid solely by reason of the fact that it was not certified under section 6, or that the certificate was not sent to the Registrar, or that the certificate was defective, irregular or incorrect.

III.—PARSI MATRIMONIAL COURTS.

Constitution of Special Courts under the Act.

18. For the purpose of hearing suits under this Act, a special Court shall be constituted in each of the Presidency-towns of Calcutta, Madras and Bombay, and in such other places in the territories of the several Local Governments as such Governments respectively shall think fit.

Parsi Chief Matrimonial Courts.

19. The Court so constituted in each of the Presidency-towns shall be entitled the Parsi Chief Matrimonial Court of Calcutta, Madras or Bombay, as the case may be. The local limits of the jurisdiction of a Parsi Chief Matrimonial Court shall be conterminous with the local limits of the ordinary original civil jurisdiction of the High Court. The Chief Justice of the High Court, or such other Judge of the same Court as the Chief Justice shall from time to time appoint shall be the Judge of such Matrimonial Court, and, in the trial of cases under this Act, he shall be aided by seven delegates.

Parsi District Matrimonial Courts.

20. Every Court so constituted at a place other than a Presidency-town shall be entitled the Parsi District Matrimonial Court of such place. Subject to the provisions contained in section 21, the local limits of the jurisdiction of such Court shall be conterminous with the limits of the district in which it is held. The Judge of the principal Court of original civil jurisdiction at such place shall be the Judge of such Matrimonial Court, and in the trial of cases under this Act he shall be aided by seven delegates.

Power to alter territorial jurisdiction of District Courts.

21. The Local Government may from time to time alter the local limits of the jurisdiction of any Parsi District Matrimonial Court, and may include within such limits any number of districts under its government.

Certain districts to be within jurisdiction of the Chief Matrimonial Court.

22. Any district which the Local Government, on account of the fewness of its Parsi inhabitants, shall deem it inexpedient to include within the jurisdiction of any District Matrimonial Court, shall be included within the jurisdiction of the Parsi Chief Matrimonial Court for the territories under such Local Government where there is such a Court.

Court seal.

23. A seal shall be made for every Court constituted under this Act, and all decrees and orders and copies of decrees and orders of such Court shall be sealed with such seal, which shall be kept in the custody of the presiding Judge.

Appointment of delegates.

24. (*1*) The Local Governments shall, in the Presidency-towns and districts subject to their respective governments, respectively appoint persons to be delegates to aid in the adjudication of cases arising under this Act, after giving the local Parsis an opportunity of expressing their opinion in such manner as the respective Governments may think fit.

(*2*) The persons so appointed shall be Parsis, their names shall be published in the local official Gazette and their number shall, within the local limits of the ordinary original civil jurisdiction of a High Court, be not more than thirty, and in districts beyond such limits, not more than twenty.

Power to appoint new delegates.

25. The appointment of a delegate shall be for ten years; but he shall be eligible for reappointment for the like term or terms. Whenever a delegate shall die, or have completed his term of office, or be desirous of relinquishing his office, or refuse or become incapable or unfit to act, or cease to be a Parsi, or be convicted of an offence under the Indian Penal Code or other law for the time being in force, or be adjudged insolvent, then and so often the Local Government may appoint any person being a Parsi to be a delegate in his stead; and the name of the person so appointed shall be published in the local official Gazette. XLV of 1860.

Delegates to be deemed public servants.

26. All delegates appointed under this Act shall be considered to be public servants within the meaning of the Indian Penal Code. XLV of 1860.

Selection of delegates under sections 19 and 20 to be from those appointed under section 24.

27. The delegates selected under sections 19 and 20 to aid in the adjudication of suits under this Act, shall be taken under the orders of the presiding Judge of the Court in due rotation from the delegates appointed by the Local Government under section 24:

Provided that each party to the suit may, without cause assigned, challenge any three of the delegates attending the Court before such delegates are selected, and no delegate so challenged shall be selected.

Practitioners in Matrimonial Courts.

28. All legal practitioners entitled to practise in a High Court shall be entitled to practise in any Court constituted under this Act, and all legal practitioners entitled to practise in a District Court shall be entitled to practise in any Parsi District Matrimonial Court constituted under this Act.

Court in which suits to be brought.

29. (*1*) All suits instituted under this Act shall be brought in the Court within the limits of whose jurisdiction the defendant resides at the time of the institution of the suit.

(*2*) When the defendant shall at such time have left British India such suit shall be brought in the Court at the place where the plaintiff and defendant last resided together.

(*3*) In any case, whether the defendant resides in British India or not, such suit may be brought in the Court at the place where the plaintiff resides or at the place where the plaintiff and the defendant last resided together, if such Court, after recording its reasons in writing, grants leave so to do.

IV.—MATRIMONIAL SUITS.

Suits for nullity.

30. In any case in which consummation of the marriage is from natural causes impossible, such marriage may, at the instance of either party thereto, be declared to be null and void.

Suits for dissolution.

31. If a husband or wife shall have been continually absent from his or her wife or husband for the space of seven years, and shall not have been heard of as being alive within that time by those persons who would have naturally heard of him or her, had he or she been alive, the marriage of such husband or wife may, at the instance of either party thereto, be dissolved.

Grounds for divorce.

32. Any married person may sue for divorce on any one or more of the following grounds, namely :—

(*a*) that the marriage has not been consummated within one year after its solemnization owing to the wilful refusal of the defendant to consummate it ;

(*b*) that the defendant at the time of the marriage was of unsound mind and has been habitually so up to the date of the suit :

Provided that divorce shall not be granted on this ground, unless the plaintiff (1) was ignorant of the fact at the time of the marriage, and (2) has filed the suit within three years from the date of the marriage ;

(*c*) that the defendant was at the time of marriage pregnant by some person other than the plaintiff :

Provided that divorce shall not be granted on this ground, unless (1) the plaintiff was at the time of the marriage ignorant of the fact alleged, (2) the suit has been filed within two years of the date of marriage, and (3) marital intercourse has not taken place after the plaintiff came to know of the fact ;

(*d*) that the defendant has since the marriage committed adultery or fornication or bigamy or rape or an unnatural offence :

Provided that divorce shall not be granted on this ground, if the suit has been filed more than two years after the plaintiff came to know of the fact ;

(*e*) that the defendant has since the marriage voluntarily caused grievous hurt to the plaintiff or has infected the plaintiff with venereal disease or, where the defendant is the husband, has compelled the wife to submit herself to prostitution :

Provided that divorce shall not be granted on this ground, if the suit has been filed more than two years (*i*) after the infliction of the grievous hurt, or (*ii*) after the plaintiff came to know of the infection, or (*iii*) after the last act of compulsory prostitution ;

(*f*) that the defendant is undergoing a sentence of imprisonment for seven years or more for an offence as defined in the Indian Penal Code : XLV of 1860.

Provided that divorce shall not be granted on this ground, unless the defendant has prior to the filing of the suit undergone at least one year's imprisonment out of the said period ;

(*g*) that the defendant has deserted the plaintiff for at least three years ;

(*h*) that a decree or order for judicial separation has been passed against the defendant, or an order has been passed against the defendant by a Magistrate awarding separate maintenance to the plaintiff, and the parties have not had marital intercourse for three years or more since such decree or order ;

(*i*) that the defendant has failed to comply with a decree for restitution of conjugal rights for a year or more ; and

(*j*) that the defendant has ceased to be a Parsi :

Provided that divorce shall not be granted on this ground if the suit has been filed more than two years after the plaintiff came to know of the fact.

Joining of co-defendant.

33. In every such suit for divorce on the ground of adultery, the plaintiff shall, unless the Court shall otherwise order, make the person with whom the adultery is alleged to have been committed a co-defendant, and in any such suit by the husband the Court may order the adulterer to pay the whole or any part of the costs of the proceedings.

Suits for judicial separation.

34. Any married person may sue for judicial separation on any of the grounds for which such person could have filed a suit for divorce, or on the ground that the defendant has been guilty of such cruelty to him or her or their children, or has used such personal violence, or has behaved in such a way as to render it in the judgment of the Court improper to compel him or her to live with the defendant.

Decrees in certain suits.

35. In any suit under section 30, 31, 32 or 34, whether defended or not, if the Court be satisfied that any of the grounds set forth in those sections for granting relief exist, that none of the grounds therein set forth for withholding relief exist and that :

(*a*) the act or omission set forth in the plaint has not been condoned ;

(*b*) the husband and wife are not colluding together :

(*c*) the plaintiff has not connived at or been accessory to the said act or omission :

(*d*) (save where a definite period of limitation is provided by this Act) there has been no unnecessary or improper delay in instituting the suit ; and

(*e*) there is no other legal ground why relief should not be granted :

then and in such case, but not otherwise, the Court shall decree such relief accordingly.

Suit for restitution of conjugal rights.

36. Where a husband shall have deserted or without lawful cause ceased to cohabit with his wife, or where a wife shall have deserted or without lawful cause ceased to cohabit with her husband, the party so deserted or with whom cohabitation shall have so ceased may sue for the restitution of his or her conjugal rights and the Court, if satisfied of the truth of the allegations contained in the plaint, and that there is no just ground why relief should not be granted, may proceed to decree such restitution of conjugal rights accordingly.

Counter-claim by defendant for any relief.

37. In any suit under this Act, the defendant may make a counter-claim for any relief he or she may be entitled to under this Act.

No suit to be brought to enforce marriage or contract arising out of marriage when husband is under sixteen years or wife under fourteen years.

38. Notwithstanding anything hereinbefore contained, no suit shall be brought in any Court to enforce any marriage or any contract connected with or arising out of any marriage, if, at the date of the institution of the suit, the husband shall not have completed the age of sixteen years, or the wife shall not have completed the age of fourteen years.

Alimony *pendente lite*.

39. In any suit under this Act if the wife shall not have an independent income sufficient for her support and the necessary expenses of the suit, the Court, on the application of the wife, may order the husband to pay her monthly or weekly during the suit such sum not exceeding one-fifth of her husband's net income as the Court, considering the circumstances of the parties, shall think reasonable.

Permanent alimony.

40. (*1*) The Court may, if it shall think fit at the time of passing any decree under this Act or subsequently thereto on application made to it for the purpose, order that the husband shall,—

(*a*) to the satisfaction of the Court, secure to the wife while she remains chaste and unmarried such gross sum or such monthly or periodical payment of money for a term not exceeding her life as, having regard to her own property, if any, her husband's ability and the conduct of the parties, shall be deemed just, and for that purpose may require a proper instrument to be executed by all necessary parties and suspend the pronouncing of its decree until such instruments shall have been duly executed, or

(*b*) make such monthly payments to the wife for her maintenance and support as the Court may think reasonable.

In case any such order shall not be obeyed by her husband it may be enforced in the manner provided for the execution of decrees and orders under the Code of Civil Procedure, 1908, and further the husband may be sued by any person supplying the wife with necessaries during the time of such disobedience for the price of such necessaries. V of 1908.

(*2*) The Court, if satisfied that there is a change in the circumstances of either party at any time, may at the instance of either party vary, modify or rescind such order in such manner as the Court may deem just.

Payment of alimony to wife or to her trustee.

41. In all cases in which the Court shall make any decree or order for alimony it may direct the same to be paid either to the wife herself, or to any trustee on her behalf to be approved by the Court, and may impose any terms or restrictions which to the Court may seem expedient, and may from time to time appoint a new trustee, if for any reason it shall appear to the Court expedient so to do.

Disposal of joint property.

42. In any suit under this Act the Court may make such provisions in the final decree as it may deem just and proper with respect to property presented at or about the time of marriage which may belong jointly to both the husband and wife.

Suits may be heard with closed doors.

43. In every suit preferred under this Act, the case shall be tried with closed doors should such be the wish of either of the parties.

Validity of trial.

44. Notwithstanding anything contained in section 19 or section 20, where in the case of a trial in a Parsi Matrimonial Court not less than five delegates have attended throughout the proceedings, the trial shall not be invalid by reason of the absence during any part thereof of the other delegates.

Provisions of Civil Procedure Code to apply to suits under the Act.

45. The provisions of the Code of Civil Procedure, 1908, shall, so far as the same may be applicable, apply to proceedings in suits instituted under this Act including proceedings in execution and orders subsequent to decree. V of 1908.

Determination of questions of law and procedure and of fact.

46. In suits under this Act all questions of law and procedure shall be determined by the presiding Judge; but the decision on the facts shall be the decision of the majority of the delegates before whom the case is tried:

Provided that, where such delegates are equally divided in opinion, the decision on the facts shall be the decision of the presiding Judge.

Appeal to High Court.

47. An appeal shall lie to the High Court from—

(*a*) the decision of any Court established under this Act, whether a Chief Matrimonial Court or District Matrimonial Court, on the ground of the decision being contrary to some law or usage having the force of law, or of a substantial error or defect in the procedure or investigation of the case which may have produced error or defect in the decision of the case upon the merits, and on no other ground; and

(*b*) the granting of leave by any such Court under sub-section (*3*) of section 29;

Provided that such appeal shall be instituted within three calendar months after the decision appealed from shall have been pronounced.

Liberty to parties to marry again.

48. When the time hereby limited for appealing against any decree granting a divorce or annulling or dissolving a marriage shall have expired, and no appeal shall have been presented against such decree, or when any such appeal shall have been dismissed, or when in the result of any appeal a divorce has been granted or a marriage has been declared to be annulled or dissolved, but not sooner, it shall be lawful for the respective parties thereto to marry again, as if the prior marriage had been terminated by death.

V.—CHILDREN OF THE PARTIES.

Custody of children.

49. In any suit under this Act, the Court may from time to time pass such interim orders and make such provisions in the final decree as it may deem just and proper with respect to the custody, maintenance and education of the children under the age of sixteen years, the marriage of whose parents is the subject of such suit, and may, after the final decree upon application, by petition for this purpose, make, revoke, suspend or vary from time to time all such orders and provisions with respect to the custody, maintenance and education of such children as might have been made by such final decree or by interim orders in case the suit for obtaining such decree were still pending.

Settlement of wife's property for benefit of children.

50. In any case in which the Court shall pronounce a decree of divorce or judicial separation for adultery of the wife, if it shall be made to appear to the Court that the wife is entitled to any property either in possession or reversion, the Court may order such settlement as it shall think reasonable to be made of any part of such property, not exceeding one half thereof, for the benefit of the children of the marriage or any of them.

VI. MISCELLANEOUS.

Superintendence of High Court

51. The High Court shall have superintendence over all Courts constituted under this Act subject to its appellate jurisdiction in the same manner as it has over other Courts under section 107 of the Government of India Act, and all the provisions of that section shall apply to such Courts.

Applicability of provisions of the Act.

52. (*1*) The provisions of this Act shall apply to all suits to which the same are applicable whether the circumstances relied on occurred before or after the passing of this Act, and whether any decree or order referred to was passed under this Act or under the law in force before the passing of this Act, and where any proceedings are pending in any Court at the time of the commencement of this Act, the Court shall allow such amendment of the pleadings as may be necessary as the result of the coming into operation of this Act.

(*2*) A Parsi who has contracted a marriage under the Parsi Marriage and Divorce Act, 1865, or under this Act, even though such Parsi may change his or her religion or domicile, so long as his or her wife or husband is alive and so long as such Parsi has not been lawfully divorced from such wife or husband or such marriage has not lawfully been declared null and void or dissolved under the decree of a competent Court under either of the said Acts, shall remain bound by the provisions of this Act. XV of 1865.

Repeal.

53. The Parsi Marriage and Divorce Act, 1865, is hereby repealed. XV of 1865.

SCHEDULE I.

(*See* section 3.)

Table of prohibited degrees of consanguinity and affinity.

A man shall not marry his—

1. Paternal grand-father's mother.
2. Paternal grand-mother's mother.
3. Maternal grand-father's mother.
4. Maternal grand-mother's mother.
5. Paternal grand-mother.
6. Paternal grand-father's wife.
7. Maternal grand-mother.
8. Maternal grand-father's wife.
9. Mother or step-mother.
10. Father's sister or step-sister.
11. Mother's sister or step-sister.
12. Sister or step-sister.
13. Brother's daughter or step-brother's daughter, or any direct lineal descendant of a brother or step-brother.
14. Sister's daughter or step-sister's daughter, or any direct lineal descendant of a sister or step-sister.
15. Daughter or step-daughter, or any direct lineal descendant of either.
16. Son's daughter or step-son's daughter, or any direct lineal descendant of a son or step-son.
17. Wife of son or step-son, or of any direct lineal descendant of a son or step-son.
18. Wife of daughter's son or of step-daughter's son, or of any direct lineal descendant of a daughter or step-daughter.
19. Mother of daughter's husband.
20. Mother of son's wife.
21. Mother of wife's paternal grand-father.

22. Mother of wife's paternal grand-mother.
23. Mother of wife's maternal grand-father.
24. Mother of wife's maternal grand-mother.
25. Wife's paternal grand-mother.
26. Wife's maternal grand-mother.
27. Wife's mother or step-mother.
28. Wife's father's sister.
29. Wife's mother's sister.
30. Father's brother's wife.
31. Mother's brother's wife.
32. Brother's son's wife.
33. Sister's son's wife.

A woman shall not marry her

1. Paternal grand-father's father.
2. Paternal grand-mother's father.
3. Maternal grand-father's father.
4. Maternal grand-mother's father.
5. Paternal grand-father.
6. Paternal grand-mother's husband.
7. Maternal grand-father.
8. Maternal grand-mother's husband.
9. Father or step-father.
10. Father's brother or step-brother.
11. Mother's brother or step-brother.
12. Brother or step-brother.
13. Brother's son or step-brother's son, or any direct lineal descendant of a brother or step-brother.
14. Sister's son or step-sister's son, or any direct lineal descendant of a sister or step-sister.
15. Son or step-son, or any direct lineal descendant of either.
16. Daughter's son or step daughter's son, or any direct lineal descendant of a daughter or step-daughter.
17. Husband of daughter or of step-daughter, or of any direct lineal descendant of a daughter or step-daughter.
18. Husband of son's daughter or of step-son's daughter, or of any direct lineal descendant of a son or step son.
19. Father of daughter's husband.
20. Father of son's wife.
21. Father of husband's paternal grand-father.
22. Father of husband's paternal grand-mother.
23. Father of husband's maternal grand father.
24. Father of husband's maternal grand-mother.
25. Husband's paternal grand-father.
26. Husband's maternal grand-father
27. Husband's father or step father.
28. Brother of husband's father.
29. Brother of husband's mother.
30. Husband's brother's son, or his direct lineal descendant.
31. Husband's sister's son, or his direct lineal descendant.
32. Brother's daughter's husband.
33. Sister's daughter's husband.

NOTE.—In the above table the words "brother" and "sister" denote brother and sister of the whole as well as half blood. Relationship by step means relationship by marriages.

SCHEDULE II.

(*See* section 6.).

Certificate of Marriage.

	Date and place of marriage.
	Names of the husband and wife.
	Condition at the time of marriage.
	Rank or profession.
	Age.
	Residence.
	Names of the Fathers or Guardians.
	Rank or profession.
	Signature of the officiating Priest.
	Signatures of the contracting parties.
	Signatures of the fathers or guardians of the contracting parties under 21 years of age.
	Signatures of witnesses.

G. H. SPENCE,

Secy. to the Govt. of India.

Registered No. C207

No. 29 of 1936

The Calcutta Gazette

THURSDAY, JULY 16, 1936.

CONTENTS:

	PAGE.		PAGE.
Preliminary Forecast of the Jute Crop, 1936	967—981	Vital Statistics of towns of Bengal for the week ending 4th July 1936 ..	991
Statement under the Cotton Ginning and Pressing Factories Act, 1925 ..	982		
Corporation of Calcutta Notice ..	982	Statement showing water-levels of certain rivers in Bengal for the month of April 1936	992—993
Weather and Crop Report for the week ending 8th July 1936	983—986		
Prices-current (wholesale and retail) of Food-grains, Salt, etc., in the districts of Bengal for the second half of June 1936	987—990	Statement of weekly gauge-readings on the river Ganges at Rampur Boalia ..	994

SUPPLEMENT.

Official Papers.

DEPARTMENT OF AGRICULTURE, BENGAL.

PRELIMINARY FORECAST OF THE JUTE CROP, 1936.

Consolidated Statement for Bengal, Bihar and Orissa and Assam.

[This Forecast deals with estimates of areas only. Estimates of outturn are dealt with in the Final Forecast.]

Area in 1936.—The estimated area of jute in the four provinces is 2,504,900 acres, an increase of 324,000 acres, or about 15 per cent, as compared with the revised total for 1935.

The consolidated figures are as follows:—

Name of province.	Estimated area under jute.			Difference between the preliminary forecast of 1936 and final forecast, 1935.	
	1935.		1936.	Increase.	Decrease.
	Preliminary.	Final.	Preliminary.		
1	2	3	4	5	6
	Acres.	Acres.	Acres.	Acres.	Acres.
Bengal (including Cooch Behar and Tripura States).	1,613,500	1,917,500*	2,180,800	263,300	..
Bihar ..	142,000	128,400	181,000	52,600	..
Orissa ..		17,200	15,100	..	2,100
Assam ..	102,700	117,800*	128,000	10,200	..
Total ..	1,858,200	2,180,900*	2,504,900	326,100	2,100

*Revised.

The Departmental Preliminary Forecasts for the four provinces are appended.

KENNETH McLEAN,
Director of Agriculture, Bengal.

CALCUTTA,
The 15th July 1936.

DEPARTMENT OF AGRICULTURE, BENGAL.

PRELIMINARY FORECAST OF THE JUTE CROP OF BENGAL, 1936.

[NOTE.—On an average of the five years ending 1933-34, the area under jute in Bengal to which this forecast relates, represents some 86·1 per cent. of the total area under jute in British India.]

The preliminary forecast deals only with the estimates of area sown and the condition of the crop at the time of publication of the forecast. The estimates of area are based on information received through the Collectors from the Revenue staff; also from the Panchayets and Agricultural Officers.

Revision of area for 1935.—In 1935 the forecasted area was 1,689,000 acres. This has since been revised to 1,917,500 acres. Crop sampling experiments were carried out last year in the jute-growing districts to check the areas returned. The results indicated that in certain districts the areas returned were considerably short of the actuals and that the errors have recurred over a number of years.

Area sown in 1936.—In Bengal returns for the present season show a total area of 2,180,800 acres, an increase of 263,300 acres, or about 13·73 per cent. as compared with the revised figures for 1935. The increase in area is attributed partly to favourable weather conditions at the time of sowing and partly to expectation of high prices for the season's crop.

Character of the season.—At the outset rainfall was defective and the progress of sowings was slow. Later on occasional good showers facilitated sowings in East Bengal. Alternate rain and sunshine helped growth and development generally. In North Bengal crop, though late in some tracts progressed favourably, on the whole. In West Bengal conditions were generally fair for sowing and the present outlook is satisfactory.

Present state of the crop.—The condition of the crop is good in East and parts of North Bengal and satisfactory elsewhere.

Stock.—Collectors report that stocks in the hands of cultivators are small.

KENNETH McLEAN,
Director of Agriculture, Bengal.

CALCUTTA:
The 15th July 1936

APPENDIX I.

Preliminary forecast of the jute crop of Bengal, 1936.

District.	Estimated area under jute—		Whether much, little or no jute remains in the district from the crop of 1935.	Date by which the sowing of the crop generally commenced this year, and whether the date was early, normal or late.	Remarks by District Officers.
	Last year.	This year.			
1	2	3	4	5	6
	Acres.	Acres.			
24-Parganas ..	45,000	53,000	No jute with cultivators.	Second week of May. Late.	Increase due to better price for jute and failure of aman paddy. Frequent rain unfavourable for crop.
Nadia ..	51,000*	61,000	Little with raiyats.	End of May. Normal.	Increase due to rise in prices and drought preventing sugarcane planting. Frequent rain retarding crop.
Murshidabad ..	25,000*	35,000	No jute with raiyats.	Middle of May. Normal.	Frequent rain is interfering with cultural operations. Condition of crop fair.
Jessore ..	70,000	85,000	Little ..	Second week of May. Late.	Increased prices and lack of ready funds owing to failure of crops last year induced cultivators to sow more jute. Incessant rain has not been favourable for crop.
Khulna ..	25,500*	25,000	Small quantity with raiyats.	Beginning of May Normal.	Excessive rain has affected the growth of the crop.
Burdwan ..	1,000	1,500	Little with cultivators.	Ditto ..	Increase is due to rise in price of jute and failure of paddy crops in last two years.
Midnapore ..	3,000	4,000	No stocks ..	Middle of May. Early.	Increase is due to seasonable rainfall and high prices. Condition of the crop is good.
Hooghly ..	18,000	22,500	Very little with cultivators.	Middle of May. Normal.	Increase is due to favourable weather at sowing time. Excessive rain has affected the crop.
Howrah ..	3,000	4,000	Little with raiyats.	End of May. Normal.	Failure of paddy last year induced cultivators to increase area under jute. Condition of crop is fair but excessive rain caused some damage.
Rajshahi ..	75,000*	87,500	Little with cultivators.	End of May. Late.	The condition of the crop is fair.
Dinajpur ..	55,500*	63,000	No stocks ..	End of May. Normal.	The condition of the crop is satisfactory.
Jalpaiguri ..	22,000	31,000	Little with cultivators.	Middle of April. Normal.	Higher price levels and the favourable sowing season account for the increase in area. Incessant rain and want of sunshine have interfered with growth. Condition of the crop is fair.
Darjeeling ..	1,500	2,000	Practically no stocks with cultivators.	May. Late ..	Heavy rainfall has affected the growth of the crop. Condition of the crop is fair.
Rangpur ..	197,000*	233,000	Little with cultivators.	March. Normal	Increase in area is due to rise in the price of jute and favourable weather at sowing time. More rain is wanted.
Bogra ..	75,000*	80,000	Little with raiyats.	Low lands February. Normal. High lands May. Late.	Increase in area is due to rise in jute prices and favourable weather. Condition of the crop is good.
Pabna ..	69,000*	75,000	Little with cultivators.	End of March. Normal.	Increase in area is due to rise in jute prices. Condition of the crop is fair.
Malda ..	10,000*	12,000	Do. ..	Middle of May. Normal.	The condition of the crop is satisfactory.
Dacca ..	235,000	264,000	Very little with raiyats.	Low lands February. Normal. High lands. April. A bit late.	Increase in area is due to the rise in price of jute and favourable weather conditions at sowing time. The condition of the crop is fair.
Mymensingh ..	460,000	518,000	Little with raiyats.	Middle of March. Normal.	Increase is due to increase in prices and favourable weather conditions at the time of sowing. The condition of the crop is fair.
Faridpur ..	183,000*	189,000	Little with cultivators.	End of April. Late.	Increase is due to expectation of continued better prices. Condition of the crop is fair.
Bakarganj ..	38,000*	39,000	Very little with raiyats.	April. Late.	Heavy rain has been unfavourable for the crop.
Chittagong ..	300	300	Little with raiyats.	April. Early.	Weather has been unfavourable.

*Revised.

District.	Estimated area under jute—		Whether much, little or no jute remains in the district from the crop of 1935.	Date by which the sowing of the crop generally commenced this year, and whether the date was early, normal or late.	Remarks by District Officers.
	Last year	This year.			
1	2	3	4	5	6
	Acres.	Acres.			
Tippera ..	200,000	225,000	Very little with raiyats.	March. Normal.	Increase is due to improved prices. Condition of the crop is good.
Noakhali ..	36,000	45,000	Little with raiyats.	Middle of March. Early.	Condition of the crop is fair.
Total for Bengal	1,898,800	2,154,800			
Cooch Behar ..	17,500	24,500	Little with cultivators.	End of March. Normal.	Increase is due to the rise in price of jute and favourable weather conditions at sowing time. The condition of the crop is satisfactory.
Tripura State ..	1,200	1,500	Little remains with raiyats.	Beginning of April. Normal	Increase is due to increase in price of fibre. Condition of the crop is fair.
Grand Total ..	1,917,500*	2,180,800			

*Revised.

APPENDIX II.

Statement of rainfall in inches from February to June each year from 1933 to 1936.

District.	Rainfall in February.					Rainfall in March.					Rainfall in April.					Rainfall in May.					Rainfall in June.				
	1933.	1934.	1935.	1936.	Normal.	1933.	1934.	1935.	1936.	Normal.	1933.	1934.	1935.	1936.	Normal.	1933.	1934.	1935.	1936.	Normal.	1933.	1934.	1935.	1936.	Normal.
24-Parganas	1·88	0·19	1·19	0·46	1·16	0·01	0·05	1·31	0·31	1·60	3·74	1·40	2·78	0·45	2·03	7·93	2·43	0·52	13·52	5·58	18·23	9·63	6·92	13·12	11·57
Nadia	2·14	0·91	1·29	0·26	0·98	0·06	0·01	1·61	1·73	1·63	5·76	1·96	1·62	1·05	2·75	7·56	5·27	3·96	10·46	6·40	12·48	15·50	9·70	8·43	9·95
Murshidabad	1·27	1·38	0·72	0·15	0·76	0·05	Nil	0·38	0·75	1·02	3·39	1·84	0·34	0·61	1·55	6·66	3·34	3·45	6·98	5·29	12·42	7·03	6·20	8·78	10·52
Jessore	4·56	0·89	1·29	0·25	1·21	0·00	0·00	2·04	4·06	2·01	9·69	4·11	4·73	1·55	3·54	10·01	7·99	2·84	11·77	7·40	19·65	15·97	8·29	8·87	11·90
Khulna	1·44	0·61	0·71	0·79	1·23	0·20	0·23	1·31	2·05	2·07	5·67	1·31	4·80	0·71	3·72	8·99	4·72	0·71	14·10	7·43	16·92	15·88	10·40	11·22	13·28
Burdwan	1·97	1·43	1·13	0·30	1·09	0·11	Nil	1·03	1·96	1·63	4·01	2·79	0·84	0·64	1·65	7·58	2·54	1·84	7·66	4·88	9·46	7·62	6·17	9·83	10·81
Midnapore	2·73	0·45	1·48	0·83	1·10	0·45	0·01	1·50	0·41	1·67	2·04	1·15	1·35	1·01	1·72	5·59	2·39	1·16	11·75	5·29	11·75	8·15	8·31	15·56	11·83
Hooghly	2·35	0·92	1·32	0·07	1·16	0·11	Nil	1·32	1·74	1·45	3·47	1·77	1·26	0·54	2·17	7·92	3·78	1·12	9·90	5·58	18·88	8·18	5·38	9·46	9·90
Howrah	2·60	0·00	1·97	0·37	1·29	0·09	Nil	0·90	0·74	1·71	3·59	2·78	2·31	0·42	2·07	12·11	3·60	2·01	12·43	5·52	17·41	10·65	8·04	16 89	11·73
Rajshahi	1·89	1·21	0·84	0·13	0·65	0·02	Nil	0·49	0·35	0·95	3·31	1·25	0·71	0·35	1·67	6·40	3·39	2·58	7·22	5·89	12·59	9·68	8·78	7·32	11·30
Dinajpur	0·44	1·27	1·08	0·01	0·68	0·04	0·01	0·03	0·91	0·82	2·95	3·06	0·73	1·80	1·94	6·09	4·74	8·63	9·14	6·71	16·71	12·37	11·53	6·65	14·61
Jalpaiguri	0·37	3·10	1·82	0·23	0·89	0·00	0·00	1·44	2·65	1·88	5·23	4·78	1·24	5·39	5·63	10·94	13·50	14·62	14·11	14·22	34·70	32·83	40·85	25·64	28·25
Darjeeling	0·21	2·72	1·61	1·45	1·00	0·05	0·07	1·12	2·75	1·71	7·39	3·09	1·81	4·71	3·97	9·15	10·25	8·29	15·13	9·16	22·23	24·89	16·47	17·56	24·39
Rangpur	0·24	1·63	0·49	0·32	0·64	0·04	0·02	0·02	1·41	1·16	4·45	4·29	2·46	3·85	3·22	7·43	10·31	16·13	13·56	10·60	19·63	15·12	19·45	7·61	17·41
Bogra	1·11	1·51	0·82	0·01	0·72	0·02	Nil	Nil	0·88	1·00	3·69	3·01	0·47	1·44	2·27	8·84	6·95	2·76	8·37	7·49	13·79	10·66	6·15	6·26	11·92
Pabna	1·69	2·04	1·22	0·16	0·79	0·52	0·04	1·47	1·16	1·85	6·93	3·79	1·97	0·92	2·88	10·24	8·11	4·71	11·52	7·02	12·04	22·94	10·94	9 44	11·33
Malda	0·39	1·88	0·59	0·05	0·79	0·06	Nil	Nil	0·82	0·78	1·81	1·08	0·04	0·56	1·21	6·46	1·62	2·22	4·33	4·62	8·45	8·80	7·02	4·56	10·68
Dacca	0·85	2·48	0·87	1·31	1·09	0·13	Nil	1·14	2·80	2·64	9·84	4·24	4·41	2·17	5·85	9·06	7·67	2·17	15·88	9·27	12·32	25·21	11·67	12·88	14·02
Mymensingh	0·92	1·96	0·55	0·24	0·81	0·07	0·21	0·17	2·73	1·72	6·12	5·03	2·59	3·88	4·55	9·71	9·25	7·03	18·65	11·15	12·43	22·78	13·04	10·79	17·83
Faridpur	1·24	2·22	0·74	0·90	1·12	0·13	Nil	1·28	1·95	2·29	10·16	2·52	3·77	1·23	5·10	9·36	6·90	3·67	15·23	8·95	15·37	18·65	13·32	8·12	14·52
Bakarganj	0·77	1·18	0·75	1·52	1·12	0·29	0·16	1·27	0·83	2·04	5·40	0·92	6·10	0·88	4·53	10·29	5·76	0·31	20·92	9·25	23·93	21·66	15·40	14·22	18·38
Chittagong	0·00	0·39	0·73	1·00	0·68	0·14	0·59	Nil	1·61	2·18	7·46	1·91	6·85	2·65	5·14	7·03	9·98	1·99	17·52	10·38	19·77	29·19	22·94	17·75	23·11
Tippera	0·20	3·40	0·76	0·72	1·08	0·61	0·45	1·17	2·47	2·88	7 41	4·10	7·39	1·37	6·47	9·85	10·98	3·84	16·60	10·71	13·33	20·27	13·43	12·85	16·01
Noakhali	0·13	1·88	1·45	1·01	0·99	0·26	0·10	0·44	1·89	2·60	7·18	2·23	5·46	2·19	6·15	7·44	7·99	0·87	20·38	10·48	18·01	21·47	15·82	11·34	21·28
Cooch Behar	0·75	2·82	1·19	0·36	0·71	0·00	0·01	0·16	3·26	1·58	4·35	3·50	2·10	4·87	4·97	8·44	14·00	19 47	11·59	13·99	29·81	19·37	34·78	24·67	28·23
Tripura State	0·00	3·14	1·41	0·62	1·24	0·37	0·07	1·03	2·16	3·78	6·96	2·44	3·36	3·23	6·54	8·66	14·38	5·54	25·13	11·31	7·56	24·52	10·65	17·89	15·41

Note.—The figures given above are the averages for all the rainfall registering stations in each district.

DEPARTMENT OF AGRICULTURE, BIHAR.

PRELIMINARY FORECAST OF THE JUTE CROP OF BIHAR, 1936.

[NOTE. **On an average of the five years ending 1933-34, the area under jute in Bihar and Orissa to which this Forecast relates represents about 7·3 per cent. of the total area under jute in British India.**]

The present forecast deals only with the estimated area sown. It gives also a general survey of prospects, but makes no reference to the probable outturn either in percentage figures or in bales.

2. **Acreage.**—I estimate the area sown during the current and four preceding years in round numbers as follows:—

Year.		Acreage.	
1932	...	170,000 (Revised).	Including Orissa.
1933	...	192,100	
1934	...	173,800 (Revised).	
1935	...	128,400	
1936	...	181,000	

3. **Weather conditions.**—In March light rain fell in all the jute-growing districts. The fall was below the normal. In April light rain fell in all the jute districts. The fall was below the normal everywhere. In May rain fell in all the jute districts. The fall was above the normal everywhere. In June light rain fell in all the jute districts. The weather conditions are reported to be not quite favourable in the important jute district of Purnea. Sowings were normal and have been completed.

4. **District returns.**—Last year's area under jute has been finally estimated at 128,400 acres excluding Orissa. The total area under jute this year is estimated by District Officers in round numbers at 181,000 acres. The increase in area is marked in Purnea and also in Bhagalpur and Darbhanga and is due to a little rise in the price of jute market in Purnea and to favourable weather in the remaining two districts.

5. **Condition and prospects.**—The condition of the crop is, on the whole, fair.

6. **General.**—The quantity of jute which remains in the jute districts from the crops of 1935 is reported to be small.

The statement below compares the estimated area under jute in this province this year with the preliminary and final figures of last year:—

Name of province.	Estimated area under jute.			Difference between the preliminary forecast of 1936 and final forecast 1935.	
	1935.		1936	Increase.	Decrease.
	Preliminary.	Final.	Preliminary.		
1	2	3	4	5	6
	Acres.	Acres.	Acres.	Acres.	Acres.
Bihar ..	128,300	128,400	181,000	52,600	..

D. R. SETHI,
Director of Agriculture, Bihar.

PATNA:
The 24th June 1936.

APPENDIX I.

Preliminary forecast of the jute crop of Bihar for 1936.

Division.	District.	Total area of the district.	Estimated total area under cultivation.	Estimated normal area under jute. (This figure has been arrived at by taking the acreage of 10 years immediately preceding the year to which this forecast relates.)	Estimated area under jute.		Whether much, little or no jute remains in the district from the crop of 1935.	Date by which the sowing of the crop generally commenced this year, and whether that date was early, normal or late.	Remarks by District Officers.
					Last year (1935) final figure.	This year (1936).			
1	2	3	4	5	6	7	8	9	10
		Acres.	Acres.	Acres.	Acres.	Acres.			
Tirhut	Champaran ..	2,263,194	1,430,200	3,200	2,300	2,325	A little ..	Middle of April to last week of April.	The weather and rainfall have been favourable. The present condition of the crop is fair. The sowings were normal and have been completed. The crop of this year is expected to be better than last year.
	Muzaffarpur ..	1,934,630	1,627,000	3,500	4,240	4,120	No jute ...	Normal in Sadr and Sitamarhi but late in Hajipur.	
	Darbhanga ..	2,142,720	1,677,800	1,600	310	380	Nil ..	First week of May (Normal).	The crop is not grown for trade but for domestic use. The increase in area is due to favourable weather.
Bhagalpur	Bhagalpur ..	2,661,814	1,684,100	3,400	3,519	3,659	Little ..	First week of April to last week.	The present condition of the crop is fair.
	Purnea ..	3,143,635	1,694,400	154,400	117,574	170,000	A little ..	Middle of April ..	The weather and rainfall have not been quite favourable. The present condition is fair. The outturn is also expected to be fair. The increase in area is due to a little rise in the price of jute market.
	Santal Parganas ..	3,512,665	1,717,900	900	500	500	Very little ..	First week of June	The prospect of the crop is fair.
	Total ..	15,658,658	9,831,400	167,000	128,443 or in round numbers 128,400	180,984 or in round numbers 181,000			

APPENDIX II.

Statement of rainfall in inches from February to June each year from 1933 to 1936.

Name of district.	Rainfall in February.				Rainfall in March.				Rainfall in April.				Rainfall in May.				Rainfall in June.			
	1933.	1934.	1935.	1936.	1933	1934.	1935.	1936	1933.	1934.	1935	1936.	1933.	1934.	1935.	1936	1933.	1934.	1935.	1936.*
1	2	3	4	5	6	7	8	9	10	11	12	13	14	15	16	17	18	19	20	21
Champaran ..	0·20	1·02	0·74	0·86	0·00	0·05	Nil	0·18	2·10	0·81	Nil	0·31	5·67	0·61	0·58	1·18	6·53	12·54	8·55	6·82
Muzaffarpur ..	0·10	0·43	1·05	0·15	0·00	0·10	Nil	0·14	1·84	0·24	0·00	0·03	3·56	0·37	0·01	4·18	5·72	6·15	5·36	4·80
Darbhanga ..	0·43	0·01	0·82	0·12	Nil	0·06	Nil	0·01	2·36	0·12	0·04	0·14	3·79	0·02	1·41	4·01	7·76	8·59	5·25	4·25
Bhagalpur ..	0·30	0·53	0·93	0·02	0·00	0·02	Nil	0·14	2·77	0·34	Nil	0·21	4·77	1·61	0·81	4·35	8·44	7·18	5·16	6·03
Purnea ..	0·24	1·28	0·11	0·03	0·00	Nil	Nil	0·11	4·29	1·26	0·08	0·83	4·80	4·02	4·36	6·48	13·89	8·70	8·70	4·06
Santal Parganas ..	0·73	1·15	0·90	0·17	0·11	0·01	0·13	0·15	2·07	0·77	0·08	0·35	6·36	1·79	1·28	4·39	8·05	0·84	4·63	6·24

*Figure relate to headquarters only up to 22nd June 1936.

DEPARTMENT OF AGRICULTURE, ORISSA.

PRELIMINARY FORECAST OF THE JUTE CROP OF ORISSA, 1936.

The present forecast deals only with the estimated area sown. It gives also a general survey of prospects, but makes no reference to the probable outturn either in percentage figures or in bales.

2. **Acreage.**—The area sown during the current and four preceding years is estimated in round numbers as follows:—

Year.	Acreage.
1932	... 19,200
1933	... 19,100
1934	... 17,400
1935	... 17,200
1936	... 15,100

3. **Weather conditions.**—In March light rain fell in Cuttack and Balasore. The fall was below normal. In April also light rain fell in Cuttack and Balasore. In May and June heavy rain fell in Cuttack and Balasore. Nearly half of the area sown in Balasore is reported to have been damaged by heavy rain and floods.

4. **District returns.**—Last year's area under jute has been finally estimated at 17,200 acres. The total area under jute this year is estimated by District Officers in round number at 15,100 acres. The decrease in area is due to heavy rainfall at sowing time.

5. **Condition and prospects.**—The condition of the crop is reported to be not good in Balasore.

6. **General.**—The quantity of jute which remains in the jute districts from the crops of 1935 is reported to be little.

The statement below compares the estimated area under jute in this province this year with the preliminary and final figures of last year:—

Name of Province.	Estimate area under jute.			Difference between the preliminary forecast of 1936 and final forecast of 1935.	
	1935.		1936.	Increase.	Decrease.
	Preliminary.	Final.	Preliminary.		
1	2	3	4	5	6
	Acres.	Acres.	Acres.	Acres.	Acres.
Orissa ..	13,700	17,200	5,100	..	2,100

R. P. WARD,

Revenue Commissioner, Orissa, Offg.

CUTTACK:

The 25th June 1936.

APPENDIX I.

Preliminary forecast of the jute crop of Orissa for 1936.

Name of province.	District.	Total area of the district.	Estimated total area under cultivation.	Estimated normal area under Jute. (This figure has been arrived at by taking the average of 10 years immediately preceding the year to which this forecast relates.)	Estimated area under jute.		Whether much, little or no jute remains in the district from the crop of 1935.	Date by which the sowing of the crop generally commenced this year, and whether the date was early, normal or late.	Remarks by District Officers.
					Last year (1935) final figure.	This year (1936).			
1	2	3	4	5	6	7	8	9	10
		Acres.	Acres.	Acres.	Acres.	Acres.			
Orissa	Cuttack ..	2,915,756	1,396,800	15,000	15,400	14,200	Very little ..	Second week of May. Middle of June in Angul subdivision. Normal.	The decrease in area is due to heavy rainfall at sowing time.
	Balasore ..	1,334,400	932,200	2,500	1,800	900	Little ..	May. Normal ..	Owing to the unusual and incessant rain and flood of May and June 1936, condition of jute crop is not good and nearly half of the area sown appears to have been damaged. Owing to want of rain in April as well as in the 1st week of May last, jute seed could not be sown and it was only when there was little shower of rain during the latter part of May 1936 people began to scatter seeds but further sowing had to be completely stopped owing to incessant rain of May and June.
	Total .	4,250,156	2,328,000	17,500	17,200	15,100			

APPENDIX II.

Statement of rainfall in inches from February to June each year from 1933 to 1936.

Name of district.	Rainfall in February.				Rainfall in March.				Rainfall in April.				Rainfall in May.				Rainfall in June.			
	1933.	1934.	1935.	1936.	1933.	1934.	1935.	1936.	1933.	1934.	1935.	1936.	1933.	1934.	1935.	1936.	1933.	1934.	1935.	1936.*
1	2	3	4	5	6	7	8	9	10	11	12	13	14	15	16	17	18	19	20	21
Cuttack ..	1·06	0·05	0·57	1·77	0·03	0·69	0·60	0·12	1·27	0·39	2·88	0·08	5·68	1·34	0·30	11·72	11·14	12·39	5·88	6·18
Balasore ..	3·56	0·19	0·60	1·86	0·32	0·37	0·96	0·43	2·44	0·27	3·37	0·12	5·82	2·85	1·28	14·39	8·51	11·36	6·52	5·33

*Figures relate to headquarters only up to 22nd June 1936.

DEPARTMENT OF AGRICULTURE, ASSAM.

PRELIMINARY FORECAST OF THE JUTE CROP OF ASSAM, 1936.

[NOTE.—On the average of the five years ending 1933-34, the area under jute in Assam represents some 5·5 per cent. of the total area under jute in British India.]

1. **Season.**—The weather has been generally favourable for the cultivation and growth of the crop almost in all the jute-growing districts but during the latter part of May there was a high flood which affected the crop in both the Valleys, specially in the low lying areas. Reports of some damage by insect also has been reported from Kamrup. The present condition of the crop is, however, reported to be satisfactory and the outturn is anticipated to be better than that of last year.

2. **Area sown.**—The total area under jute as estimated by the Deputy Commissioners is 128,000 acres against 117,800 acres (revised) of last year. There is an increase in area in all the important jute-growing districts except Sylhet which is attributed mainly to favourable weather condition at sowing time. The net increase over last year's actual figure is 10,200 acres.

3. **Stock.**—According to the reports of the Deputy Commissioners very little jute remains in stock from the crop of last year.

Name of province.	Estimated area under jute.			Difference between the preliminary forecast of 1936 and final forecast, 1935.	
	1935.		1936.	Increase.	Decrease.
	Preliminary.	Final	Preliminary.		
1	2	3	4	5	6
	Acres.	Acres.	Acres.	Acres.	Acres.
Assam ..	102,700	117,800	128,000	10,200	..

J. N. CHAKRAVARTY,
Director of Agriculture, Assam.

SHILLONG:
The 26th June 1936.

APPENDIX I.

Preliminary forecast of the jute crop of Assam, 1936.

District.	Area under jute—			Difference between the figures now estimated for 1936 and the final of 1935.		Whether much, little or no jute remains in the district from the crop of 1935.	Date by which the sowing of the crop generally commenced this year and whether that date was early, normal or late.	Remarks by the Deputy Commissioner.
	Normal.	Final of 1935.	Now estimated for 1936.	Increase.	Decrease.			
1	2	3	4	5	6	7	8	9
	Acres.	Acres.	Acres.	Acres.	Acres.			
Cachar (plains) ..	200	200	200	..	..	None ..	Middle of April. Normal.	The weather was favourable at sowing time but the growth has been impeded by the excessive rainfall during the first part of June resulting in flood, especially in low-lying areas where the crop has been damaged to some extent. The outturn is likely to be worse than that of last year.
Sylhet ..	15,000	10,700	9,400	..	1,300	Little ..	Do ..	The decrease in area is due to restriction scheme. The weather has been generally favourable for the cultivation and growth of the crop and a better outturn than last year is anticipated.
Goalpara ..	60,000	29,400	35,000	5,600	..	A little quantity remains.	First part of April. Normal	The increase in area is due to favourable weather condition at sowing time. The weather has been generally favourable for the crop but the recent flood has caused some damage to the crop in low-lying areas. However, the outturn is expected to be better than last year.
Kamrup ..	28,000	24,200	26,100	1,900	..	None ..	Early April. Normal.	The increase in area is due to favourable weather at sowing time. The weather has been generally favourable for the cultivation and growth of the crop but flood and insects have caused some damage in some places. The outturn is likely to be better than last year.
Darrang ..	12,600	8,700	9,000	300	..	Little ..	Beginning of April. Normal.	The slight increase in area is due to extension of cultivation. The weather has been favourable for the cultivation and growth of the crop and a better outturn than last year is expected.
Nowgong ..	50,000	40,200	43,500	3,300	..	Do. ..	Middle of March. Normal.	The increase in area is due partly to better price of jute last year and partly to the extension of cultivation by the colonists in spite of the attempt to restrict cultivation. The weather has been favourable for the crop but the recent flood has caused some damage specially in the low-lying areas. The present condition of the crop is good and the outturn is expected to be better than last year.
Sibsagar ..	400	400	400	..	..	None ..	Middle of April. Normal.	The weather was dry at sowing time but improved afterwards. The present condition of the crop is fair and the outturn is expected to be the same as in last year.
Lakhimpur ..	1,000	300	400	100	..	None ..	First week of April. Normal	The weather has been favourable for the crop and a better outturn than last year is anticipated.
Garo Hills (plains)	5,000	3,700	4,000	300	..	Do. ..	Ditto ..	The increase in area is due to favourable weather at sowing time. The weather has been favourable for the cultivation and growth of the crop and a normal outturn is expected.
Total ..	172,200	117,800	128,000	11,500	1,300			

APPENDIX II.

Statement of rainfall from February to June each year from 1933 to 1936.

District.	Rainfall in February.				Rainfall in March.				Rainfall in April.				Rainfall in May.				Rainfall in June.			
	1933.	1934.	1935.	1936.	1933.	1934.	1935.	1936.	1933.	1934.	1935.	1936.	1933.	1934.	1935.	1936.	1933.	1934.	1935.	1936.*
1	2	3	4	5	6	7	8	9	10	11	12	13	14	15	16	17	18	19	20	21
	Inches.	Inches.	Inches.	Inches.	Inches.	Inches.	Inches.	Inches.	Inches.	Inches.	Inches.	Inches.	Inches.	Inches.	Inches.	Inches.	Inches.	Inches.	Inches.	Inches.
Cachar	·38	5·12	2·13	3·37	1·24	4·49	3·17	5·99	9·43	18·76	12·00	20·58	16·67	26·60	16·39	16·24	23·67	32·77	20·80	17·43
Sylhet	·40	4·19	·59	3·00	·40	1·29	2·47	4·44	7·99	14·59	5·66	12·17	12·33	28·48	16·84	22·03	25·71	40·36	18·25	28·14
Goalpara	·53	2·20	1·38	1·02	Nil	·02	1·60	2·11	6·47	6·52	2·91	5·54	9·41	18·03	18·14	13·51	21·00	15·67	16·77	17·95
Kamrup	1·56	2·98	2·11	2·40	·08	·09	2·03	1·97	7·66	8·64	1·82	4·89	12·64	17·61	16·27	14·61	15·00	21·05	12·61	13·56
Darrang	·87	2·26	1·90	2·19	·18	·06	2·14	2·10	5·68	9·92	3·92	7·99	9·26	13·68	12·16	11·16	13·90	17·28	7·07	13·61
Nowgong	1·18	1·59	2·17	2·00	·11	·06	1·80	1·45	4·89	6·46	2·04	4·11	6·63	10·53	7·23	13·44	11·05	24·20	5·94	8·01
Sibsagar	3·38	2·21	2·02	2·65	·66	·52	1·93	1·73	9·58	10·52	3·22	6·68	6·87	14·71	12·42	12·06	15·75	18·90	7·10	9·83
Lakhimpur	3·13	3·12	3·40	1·33	1·82	1·53	4·29	2·13	8·96	15·52	5·92	9·61	10·11	18·24	13·89	13·25	24·93	24·13	21·10	21·11
Garo Hills	·32	1·35	·28	·29	·09	·20	·17	3·39	7·81	12·92	3·09	6·38	12·89	10·59	13·16	24·88	13·87	32·82	16·60	18·73

*The figures for June 1936 are only approximate and are taken from the weekly weather and crop reports up to the week ending 10th June 1936.

FORM C—BENGAL.

STATEMENT OF COTTON PRESSED IN THE BENGAL PRESIDENCY FOR THE WEEK ENDING THE 3rd JULY 1936.

[Section 5(2) of the Cotton Ginning and Pressing Factories Act, 1925.]

Name of Division or block.	Number of bales pressed.				District included in the block.
	During the week.	During the corresponding week last year.	Since 1st September 1935 (the date prescribed by the Local Government as the commencement of the season).	During the corresponding period last year.	
The Bengal Presidency	1,912 or 1,895·33 bales of 400 lbs. each.	1,796	58,974	38,327	All districts in the Presidency.

J. B. McBRIDE,

Chief Inspector of Factories, Bengal.

CORPORATION OF CALCUTTA.

Central Municipal Office, the 13th July 1936.

By-election to elect a Councillor of the Corporation of Calcutta for the General Constituency —Collootola—Ward No. 8—in one of the two seats not reserved for Muhammadans.

NOTICE.

In compliance with provisions of sub-section (2) of section 28 of Act III (B. C.) of 1923 and rule 15 (2) of the rules made by the Local Government under section 30 of the said Act, it is hereby notified that Kaviraj Satya Brata Sen has been declared duly elected as a Councillor of the Corporation of Calcutta for the General Constituency—Collootola Ward No. 8.

J. C. MUKERJEA,

Chief Executive Officer.

DISTRICT REPORTS ON WEATHER AND CROPS.

For the week ending on the 8th July 1936.

Summary.—During the week the rainfall was generally moderate to heavy. Preparatory tillage for and sowing of winter rice in seed-beds are in brisk progress. Reaping of autumn crops is proceeding in places. The standing crops are thriving well. During the week ending Saturday, the 4th July, daily average of labourers attending test relief works and the number of persons receiving gratuitous relief were 1,865 and 4,733, respectively, in the distressed areas of Murshidabad. In 24-Parganas, Birbhum and Burdwan, 518, 2,128 and 4,100 persons were employed on test relief works on Saturday, the 4th July. In Nadia and Burdwan, 887 and 1,300 persons also received gratuitous relief. In Hooghly 9,193 labourers were engaged on test relief works during the week ending Saturday, the 4th idem. The average price of common rice for the province has remained practically stationary as compared with that of the previous week.

Serial No.	District and sub-division.	Rainfall.	Price of common rice, in seers, per rupee.		Character of the weather, condition of crops, etc.
			This week.	Previous week.	
1	2	3	4	5	6
		Inches.			
1	24-Parganas ..	2·12	9¾	9 15/16	Weather seasonable. Fodder and water are sufficient. Prospects of crops are favourable except in Barasat subdivision. Import of rice continues from East Bengal in Basirhat. 518 persons were engaged on test relief works and relief works in Sadar, Basirhat and Diamond Harbour on the last day of the week ending the 4th July. Agricultural loans also gratuitous relief were distributed during the week in Sadar, Basirhat, Diamond Harbour and Barasat.
	Diamond Harbour..	6·64	9½	9½	
	Barrackpore ..	1·96	9	9	
	Barasat ..	1·15	9	9	
	Basirhat ..	1·70	11	11	
2	Nadia ..	5·15	8	8	Weather seasonable. Agricultural operation is going on in full swing. Rice is being imported largely in Ranaghat. Fodder and water are sufficient. Cattle-disease is reported from Nabadwip and Nakashipara police-stations. Distribution of agricultural loan is being made in Sadar, Ranaghat and Chuadanga. Gratuitous relief was given to 5 and 840 persons in Sadar and Chuadanga for the week ending 4th July, and 42 persons in Meherpur on the 1st July 1936.
	Kushtia ..	5·20	10	10	
	Meherpur ..	2·90	11	11	
	Chuadanga ..	3·10	12	12	
	Ranaghat ..	2·58	9½	9½	
3	Murshidabad ..	3·02	9½	9½	Weather seasonable. Prospects of standing crops are favourable. Fodder and water are sufficient. Cattle-disease is reported from Sadar, Lalbagh and Kandi subdivisions. Rice is being imported from Dinajpur in Lalbagh subdivision. No export. Number of average daily labourers who attended the test relief centres during the week ending Saturday, the 4th July, was 1,865 and that of persons receiving gratuitous relief in the distressed areas was 269, 3,341 and 1,123 in Lalbagh, Kandi and Jangipur subdivisions, respectively.
	Lalbagh ..	2·53	10	10½	
	Jangipur ..	3·09	10½	10½	
	Kandi ..	3·70	9½	9½	
4	Jessore ..	2·69	11	11	Weather seasonable. Prospects of standing crops are fair. No large export or import. Fodder and water are sufficient.
	Jhenidah ..	3·05	13½	13	
	Magura ..	3·70	12	13	
	Narail ..	2·85	13	12	
	Bongaon ..	2·21	10	10	
5	Khulna ..	3·38	10	10	Weather seasonable. Fodder and water are sufficient. Test relief works suspended.
	Satkhira ..	2·93	10½	10½	
	Bagerhat ..	3·92	8½	8½	

Serial No.	District and sub-division.	Rainfall.	Price of common rice, in seers, per rupee.		Character of the weather, condition of crops, etc.
			This week.	Previous week.	
1	2	3	4	5	6
		Inches.			
6	Burdwan ..	8·25	9½	9½	Weather seasonable. Condition of crop is favourable. Fodder is sufficient. Cattle-disease is reported from Ausgram thana. 4,100 labourers were engaged on test relief works on 4th July 1936. 1,300 persons received gratuitous relief.
	Asansol ..	2·07	11	11	
	Katwa ..	3·90	9	9	
	Kalna ..	2·14	8½	8½	
7	Birbhum ..	3·49	10	10	Weather seasonable. Prospects of standing crops are fair. Water is sufficient but there is scarcity of fodder. 2,128 persons were employed on test relief works on preceding Saturday.
	Rampurhat ..	1·58	11	10½	
8	Bankura ..	3·60	10	10	Weather hot and cloudy. Transplantation of paddy seedlings is in progress. Prospects of standing crops are good. Fodder and water are sufficient.
	Vishnupur .	2·37	8¾	8¾	
9	Midnapore ..	1·53	10	10	Transplantation of winter paddy continues. Jute plants are thriving. Fodder and water are sufficient.
	Contai ..	2·63	8	8½	
	Tamluk ..	2·40	9	9	
	Ghatal ..	0·64	11⅛	11⅛	
	Jhargram ..	3·23	10	10	
10	Hooghly ..	3·38	9⅞	9⅞	Weather seasonable. Fodder and water are sufficient. The number of test work labourers for the week ending Saturday, the 4th July, was 9,193.
	Serampore ..	2·29	9½	10	
	Arambagh ..	2·43	9½	9½	
11	Howrah ..	2·93	10	10	Weather seasonable. Cultivation of winter paddy is in progress. Fodder and water are sufficient.
	Uluberia ..	1·80	9½	9½	
12	Rajshahi (Rampur-Boalia).	4·32	9¼	9¼	Weather seasonable. Condition of standing crops appears to be favourable. Fodder and water are sufficient.
	Naogaon ..	2·24	10½	10½	
	Nator ..	2·13	9¾	9¾	
13	Dinajpur ..	3·31	11	11	Weather seasonable. Fodder and water are sufficient.
	Thakurgaon ..	(n)	(n)	12	
	Balurghat ..	(n)	(n)	11	
14	Jalpaiguri ..	5·08	11	11	Weather hot. Fodder and water are sufficient.
	Alipur ..	5·24	11½	11½	

(n) Not reported.

Serial No.	District and sub-division.	Rainfall.	Price of common rice, in seers, per rupee.		Character of the weather, condition of crops, etc.
			This week.	Previous week.	
1	2	3	4	5	6
		Inches.			
15	Darjeeling ..	(*n*)	8	8	Weather favourable. Transplantation of paddy and *marua* is in progress. Fodder and water are sufficient.
	Kurseong ..	1·60	8	8	
	Siliguri ..	2·35	10	10	
	Kalimpong ..	5·67	7	7	
16	Rangpur ..	(*n*)	(*n*)	(*n*)	Report not received.
	Nilphamari ..	(*n*)	(*n*)	(*n*)	
	Kurigram ..	(*n*)	(*n*)	(*n*)	
	Gaibandha ..	(*n*)	(*n*)	(*n*)	
17	Bogra ..	3·64	10¼	10¼	Sky cloudy with occasional rainfall. Agricultural operation not affected by weather condition. Fodder and water are sufficient.
18	Pabna ..	2·18	10½	10½	Weather seasonable. Condition of standing crops is satisfactory. Fodder and water are sufficient.
	Serajganj ..	2·81	11½	11½	
19	Malda ..	2·45	10¾	10½	Weather seasonable. Its effects on agricultural operation are good. Prospects of standing crops are fair. Fodder and water are available. Cattle-disease is subsiding.
20	Cooch Behar ..	2·31	13 4/16	12 4/16	Weather seasonable. Preparation of lands for winter paddy and rearing of seedlings in nursery and transplantation of the same are in progress. Prospects of standing crops are fair. Harvesting of *autumn* crops continues. Fodder and water are sufficient. Cattle-disease is reported from Tufanganj and Dinhata subdivisions.
21	Dacca ..	4·38	10½	10	Rainfall at North Sadar (Kapasia) 3·31. Weather seasonable. Prospects of crops appear to be good. No large export and import. Fodder and water are sufficient. Anthrax exists in Sadar and Narayanganj subdivisions. Harvesting of *aus* paddy and jute continues in the Manikganj subdivision.
	Manikganj ..	2·83	10⅝	10½	
	Narayanganj ..	3·61	12	12	
	Munshiganj ..	3·20	10½	10¾	

(*n*) Not reported.

Serial No.	District and sub-division.	Rainfall.	Price of common rice, in seers, per rupee.		Character of the weather, condition of crops, etc.
			This week.	Previous week.	
1	2	3	4	5	6
		Inches.			
22	Mymensingh ..	2·42	10	10	Weather seasonable. Condition of crops is fair. Fodder and water are available.
	Jamalpur ..	2·04	10½	10½	
	Tangail ..	2·43	11	11	
	Netrakona ..	5·90	12½	12½	
	Kishorganj ..	2·42	10 11/16	10½	
23	Faridpur ..	(n)	(n)	11	Report not received.
	Goalundo (Rajbari)	(n)	(n)	10½	
	Madaripur ..	(n)	(n)	11½	
	Gopalganj (a) ..	(n)	(n)	12½	
24	Bakarganj (Barisal)	4·51	10	10	Weather seasonable. Prospects of standing crops are not bad in Sadar, fair in Pirojpur and Patuakhali and good in Bhola. Fodder and water are sufficient. Cattle-disease exists in Pirojpur and Patuakhali subdivisions.
	Pirojpur ..	8·26	9½	9½	
	Patuakhali ..	5·90	10	10	
	Dakshin Shabazpur (Bhola).	3·41	10	10	
25	Chittagong ..	2·22	10 11*	10 11*	Weather seasonable. Transplantation of *aman* crop has commenced and its condition is fair. Fodder and water are sufficient. Cattle-disease is reported from places. Panga salt sells at 14 seers at Sadar and 12 seers at Cox's Bazar.
	Cox's Bazar ..	4·68	11	11	
26	Tippera (Comilla) ..	5·35	10½	10	Weather condition and prospect of crops are fair.
	Brahmanbaria ..	1·41	10½	10½	
	Chandpur ..	4·41	11	11½	
27	Noakhali ..	9·18	9	9	Rainfall has good effect on the standing crops. Fodder and water are sufficient. Cattle-disease still prevails in Feni thana.
	Feni ..	4·53	10½	10½	
28	Chittagong Hill Tracts.	2·09	11	11	Weather seasonable. Its effects are favourable. Fodder and water are sufficient. Cattle-disease still prevails.
29	Tripura State ..	3·29	10	10	Weather seasonable. Condition of standing crops is fair. Fodder and water are sufficient. Cattle-disease exists in Sabroom and Belonia Divisions. Cotton sells at Rs. 8 to Rs. 10 and jute at Rs. 2-8 to Rs. 5-8.

(a) The rainfall at Haridaspur, which is very near to Gopalganj, is shown here.

* Burma rice. (n) Not reported.

S. ABDULLAH, for *Director of Agriculture, Bengal.*

Dacca, the 13th July 1936.

Wholesale prices-current of food grains, gur, etc., in the undermentioned marts of Bengal for the second half of June 1936.

Marts.	Paddy local (best quality).			Paddy local (common quality).			Rice local (best quality).		
	Present return.	Next preceding return.	Corresponding return of last year.	Present return.	Next preceding return.	Corresponding return of last year.	Present return.	Next preceding return.	Corresponding return of last year.
1	2	3	4	5	6	7	8	9	10
	Rs. a. p.	Rs. a. p.	Rs. a. p.	Rs. a. p.	Rs. a. p.	Rs. a. p.	Rs. a. p.	Rs. a. p.	Rs. a. p.
Calcutta	3 0 0	3 0 0	2 9 0	2 12 0	2 12 0	2 7 6	5 6 0	5 8 0	5 12 0
Burdwan	2 8 0	2 8 0	2 1 0	2 6 6	2 6 0	1 15 0	4 8 0	4 8 0	4 9 0
Midnapore	2 10 0	2 10 0	2 2 0	2 3 0	2 3 0	1 14 0	4 12 0	4 12 0	4 4 0
Chittagong	1 15 0	1 15 0	1 15 0	1 14 6	1 14 6	1 12 0	4 8 0	4 8 0	5 3 0
Dacca	2 8 0	2 8 0	2 8 0	2 2 0	2 3 6	2 4 0	4 2 0	4 4 0	4 6 0
Pabna	2 4 0	2 4 0	2 6 0	2 0 0	2 0 0	2 1 0	4 12 0	4 10 0	4 14 0
Rangpur	2 0 0	1 14 0	1 14 0	1 12 0	1 10 0	1 12 0	4 8 0	4 8 0	5 8 0
Serajganj (Pabna)	..	..	..	..	..	..	..	..	..
Sarisabari (Mymensingh) ..	..	..	..	..	..	..	..	..	..
Narayanganj (Dacca)	..	..	..	..	..	..	..	..	..

Marts.	Rice local (common quality).			Wheat.			Raw cotton.		
	Present return.	Next preceding return.	Corresponding return of last year.	Present return.	Next preceding return.	Corresponding return of last year.	Present return.	Next preceding return.	Corresponding return of last year
	11	12	13	14	15	16	17	18	19
	Rs. a. p.	Rs. a. p.	Rs. a. p.	Rs. a. p.	Rs. a. p.	Rs. a. p.	Rs. a. p.	Rs. a. p.	Rs. a. p.
Calcutta	4 14 0	4 14 0	4 8 0	3 5 6 to 3 6 6	3 4 6	3 4 0	21 12 0	21 0 0	17 8 0
Burdwan	4 2 0	4 2 0	3 9 0						
Midnapore	3 12 0	3 12 0	3 5 6	..	..	..	..	..	..
Chittagong	3 10 0	3 10 0	3 11 0	..	..	..	..	..	..
Dacca	3 5 0	3 10 0	4 0 0	..	..	..	..	..	..
Pabna	3 13 0	3 13 0	3 10 0	..	..	..	..	..	..
Rangpur	4 0 0	4 0 0	3 12 0	..	..	..	..	..	..
Serajganj (Pabna)	..	..	..	..	..	..	..	..	..
Sarisabari (Mymensingh) ..	..	..	..	..	..	..	..	..	..
Narayanganj (Dacca)	..	..	..	..	..	..	..	..	..

Marts.	Coal.			Raw jute (weighted average).			*Gur* (sugarcane).		
	Present return.	Next preceding return.	Corresponding return of last year.	Present return.	Next preceding return.	Corresponding return of last year.	Present return.	Next preceding return.	Corresponding return of last year.
	20	21	22	23	24	25	26	27	28
	Rs. a. p.	Rs. a. p.	Rs. a. p.	Rs. a. p.	Rs. a. p.	Rs. a. p.	Rs. a. p.	Rs. a. p.	Rs. a. p.
Calcutta	0 6 6	0 6 6	0 7 6	5 8 0	5 8 0	5 11 0	3 0 0	3 0 0	4 8 0
Burdwan	..	..	..	..	..	..	4 6 0	4 6 0	4 8 0
Midnapore	..	..	..	..	..	..	4 0 0	4 0 0	4 8 0
Chittagong	..	..	..	..	..	..	3 12 0	3 12 0	5 8 0
Dacca	..	..	..	..	..	..	3 11 0	3 14 0	5 8 0
Pabna	..	..	..	..	..	..	2 6 6	2 6 0	4 0 0
Rangpur	..	..	..	..	..	..	2 8 6 to 3 0 0	2 8 0 to 3 0 0	3 0 0 to 3 8 0
Serajganj (Pabna)	..	..	..	(a) 1 8 0	5 0 0	5 2 0	..	..	..
Sarisabari (Mymensingh) ..	..	..	..	(a) 1 0 0 to 5 8 0	3 8 0 to 5 13 0	4 1 0 to 6 4 0	..	..	..
Narayanganj (Dacca) ..	..	..	..	4 2 0 to 5 4 0	4 0 0 to 4 8 0	5 0 0 to 5 11 0	..	..	..

(*a*) New

Dacca, the 11th July 1936.

S. ABDULLAH, for *Director of Agriculture, Bengal.*

Prices-current (retail) of common rice and salt in the districts of Bengal for the second half of June 1936.

Districts and Marts.	Quantity per rupee in seers of eighty tolas.								
	Common rice.						Salt.		
	Average.			Cheapest.					
	Present return.	Next preceding return.	Corresponding return of last year.	Present return.	Next preceding return.	Corresponding return of last year.	Present return.	Next preceding return.	Corresponding return of last year.
	S. Ch.	S. Ch.	S. Ch.	S. Ch.	S. Ch.	S. Ch.	S. Ch.	S. Ch.	S. Ch.
Presidency Division.									
24-Parganas—									
1 Chotla Hat	9 9	9 11	10 10	11 4	11 6	11 6	18 0C	17 8C	17 12
2 Mogra Hat	9 6	9 13	9 11	10 10	10 9	10 0	16 0C 14 8K	16 0C 16 0K	16 0
3 Calcutta-Beliaghata ..	8 4	8 7	8 12	11 7	10 0	11 8	18 10C 17 10K 16 0P	18 0C 16 4K 15 0P	16 0
Nadia—									
4 Goari	8 0	8 0	9 6	11 7	11 7	10 12	14 0P 14 0K	14 0P 14 0K	14 0†
5 Ranaghat	9 8	9 8	9 4	11 12	11 12	12 8	14 0P 14 0K	14 0P 14 0K	14 0†
Murshidabad—									
6 Berhampore	9 8	9 8	9 8	10 0	10 0	10 0	14 0K	14 0K	14 0K
7 Kandi	9 8	9 8	10 8	9 12	9 12	11 0	14 0K 13 0B	14 0K 14 0B	14 0
8 Jangipur	10 0	10 0	10 0	10 4	10 4	10 8	16 0K	15 0K	15 0
Jessore—									
9 Sadar	12 8	11 0	10 0	12 8	12 0	10 8	15 0P 13 0K	15 0P 15 0K	15 0†
10 Bongaon	10 0	10 0	10 0	12 8	12 8	12 8	14 8P 13 0K	14 8P 13 0K	14 8 13 0K
Khulna—									
11 Sadar	10 0	9 8	11 0	11 8	11 8	1 0	16 0C 16 0K	16 0C 16 0K	14 0 13 0K
12 Bagerhat	8 8	9 0	12 0	10 0	10 0	12 10	15 0K	15 0K	14 0
Burdwan Division.									
Burdwan—									
13 Sadar	9 4	9 4	11 4	9 12	9 8	10 12	13 0C 13 0K	13 0C 13 0K	16 0†
14 Kalna	8 8	8 8	9 7	11 14 (B)	12 0 (B)	9 12	17 0P	17 0P	16 0
Birbhum—									
15 Suri	10 0	10 0	10 0	11 0	10 8	11 0	14 0M	14 0M	14 0
16 Rampurhat	10 8	10 8	10 0	11 0	11 0	11 0	16 0C	16 0C	15 0
Bankura—									
17 Sadar	10 0	10 0	10 0	11 0	11 0	11 0	14 0P	14 0P	14 0
18 Vishnupur	9 0	9 0	10 0	10 0	10 0	11 4	13 0P	13 0P	13

P—Panga. R—Rangoon rice. K—Karkach. B—Bombay. C—Crushed.

N.B.—The prices of Karkach and Liverpool salt tally with each other in marts marked †.

M—Madras.

Prices-current (retail) of common rice and salt in the districts of Bengal for the second half of June 1936.

Districts and Marts.	Quantity per rupee in seers of eighty tolas.								
	Common rice.						Salt.		
	Average.			Cheapest.					
	Present return.	Next preceding return.	Corresponding return of last year.	Present return.	Next preceding return.	Corresponding return of last year.	Present return.	Next preceding return.	Corresponding return of last year.
	S. Ch.	S. Ch.	S. Ch.	S. Ch.	S. Ch.	S. Ch.	S. Ch.	S. Ch.	S. Ch.
BURDWAN DIVISION—*contd.*									
Midnapore—									
19 Sadar	11 0	11 0	9 10	11 11	11 11	12 6	14 0L	14 0L 14 0K	14 0
20 Contai	8 0	8 0	12 0	9 0	9 0	13 0	13 0C	13 0C	21 0
Hooghly—									
21 Sadar	9 10	9 11	10 0	11 8	11 4	11 0	16 0P	16 0P	15 0
22 Arambagh ..	9 8	10 0	11 0	10 0	10 8	11 8	14 8P 14 0K	14 8P 14 0K	14 8 14 0K
Howrah—									
23 Sadar	9 8	9 8	10 0	11 0	11 8	11 8	17 8C 15 0K	17 0C 15 0K	16 0
24 Uluberia ..	9 8	9 8	10 8	10 0	10 0	12 0	16 0C 13 4K	16 0C 14 0K	16 0
RAJSHAHI DIVISION.									
Rajshahi—									
25 Rampur-Boalia ..	9 8	9 12	10 0	10 4	10 0	10 8	12 0C 12 0K	12 0C 12 0K	13 4†
26 Nator	9 12	9 12	9 12	10 8	10 8	10 8	12 0C 12 0K	12 0C 12 0K	12 0†
27 Dinajpur—Railbazar Hat.	10 0	9 8	12 9	11 0	10 0	13 3	10 0K	10 0K	14 0†
28 Jalpaiguri—Sadar ..	9 0	9 8	10 0	10 8	11 0	12 0	13 0C	13 0C	13 0
Darjeeling—									
29 Sadar	9 0	9 0	8 8	9 0	9 8	10 0	10 0P 9 0K	10 0P 9 0K	10 8 9 0K
30 Siliguri ..	10 0	10 0	10 8	11 0	11 0	11 0	13 0P 12 0K 12 0C	13 0P 12 0K 12 0C	12 0†
Rangpur—									
31 Sadar	11 4	11 4	11 13	11 4	11 4	11 13	13 8P	13 8P	14 12
32 Nilphamari ..	11 10	11 8	10 8	12 10	12 8	13 0	12 8K	12 8K	12 8
33 Bogra—Sadar ..	10 8	10 11	12 0	10 12	11 0	12 6	12 0C	12 0C	15 0
Pabna—									
34 Sadar	10 4	10 8	10 0	11 8	11 8	11 8	14 0L 14 0K	14 0L 14 0K	13 0 13 0K
35 Serajganj ..	10 12	10 12	10 12	11 4	11 4	11 0	16 0L 15 0K	16 0L 15 0K	16 0 15 0K
Malda—									
36 Sadar	10 8	10 8	11 0	11 0	11 8	11 12	14 8OK 13 0K 15 0OK 14 0K	14 8C 14 0K 15 0C 14 0K	14 8 15 0K 15 0 14 0K
37 Balia—Nawabganj	10 13	10 7	11 4	11 8	12 0	11 12			

P—Panga. K—Kurkuch C—Crushed L—Liverpool.
N. B.—The prices of Kurkuch and Liverpool salt tally with each other in marts marked †.
OK—Okha and other Indian varieties.

Prices-current (retail) of common rice and salt in the districts of Bengal for the second half of June 1936.

Districts and Marts.	Quantity per rupee in seers of eighty tolas.								
	Common rice.						Salt.		
	Average.			Cheapest.					
	Present return.	Next preceding return.	Corresponding return of last year.	Present return.	Next preceding return.	Corresponding return of last year.	Present return.	Next preceding return.	Corresponding return of last year.
	S. Ch.	S. Ch.	S. Ch.	S. Ch.	S. Ch.	S. Ch.	S. Ch.	S. Ch.	S. Ch.
Dacca Division.									
Dacca—									
38 Sadar	9 8	10 0	10 0	11 8	12 0	11 8	13 4C 13 4K	14 0C 13 0K	14 0 13 12K
39 Mirkadim ..	10 8	10 12	10 0	11 4	11 0	11 0	14 8K	14 8K	15 0K
Mymensingh—									
40 Nasirabad ..	9 4	9 8	10 8	11 0	11 0	11 8	13 4L 13 0K	13 4L 13 0K	13 0K
41 Netrakona ..	12 12	12 4	10 10	13 10	13 4	12 4	13 8L 13 5K	13 4L 12 4K	13 4 12 4K
Faridpur—									
42 Sadar ..	11 0	11 0	11 0	12 0	12 0	12 0	13 0K	13 0K	12 0
43 Rajbari ..	10 8	10 8	10 0	12 8	12 8	12 0	12 0C	12 0C	12 0
Bakarganj—									
44 Barisal ..	10 0	10 0	12 0	10 8	10 8	13 0	14 8C 14 8K	13 5C 13 5K	16 0 14 0K
45 Pirojpur ..	9 12	9 12	10 0	10 0	10 0	10 2	14 0C 14 0K	14 0C 14 0K	13 0†
Chittagong Division.									
Tippera—									
46 Comilla ..	10 0	10 0	10 0	10 11	10 11	10 11	14 8C	14 8C	12 13 10 10K
47 Chandpur ..	10 1	10 1	11 0	11 4	11 4	11 8	16 0C	16 0C	13 1
Noakhali—									
48 Kalitara Hat ..	9 0	9 8	9 0	10 8	10 8	10 0	13 0C 10 8K	13 0C 10 8K	13 0 10 0K
49 Feni Hat ..	10 0	10 0	10 12	10 10	10 10	11 8	13 0C 13 2K	13 0C 13 2K	13 4 10 0K
Chittagong—									
50 Sadar	10 0	10 0	7 10	11 0	11 0	10 5	13 0P	13 0P	13 0
51 Cox's Bazar ..	9 0	9 0	9 0	11 0	11 0	10 0	13 0P	13 0P	13 0
52 Chittagong Hill Tracts —Rangamati ..	11 0	11 0	10 0	12 0	12 0	11 0	10 8L 7 0K	10 8L 7 0K	13 0 6 4K

P—Panga. C—Crushed. K—Karkach. L—Liverpool.

N. B.—The prices of Karkach and Liverpool salt tally with each other in marts marked †.

Dacca, the 11th July 1936.

S. ABDULLAH, for *Director of Agriculture, Bengal.*

Vital statistics of towns with a population of 50,000 and over of the Bengal Presidency for the week ending Saturday, the 4th July 1936.

Districts.	Nos.	Towns.	Population under registration according to census of 1931.			Births registered.		Deaths registered.																							
			Male.	Female.	Total.	Number registered (excluding still-births).	Still-births registered.	Cholera.	Small-pox.	Plague.	Cerebro-spinal meningitis.	Malaria.	Enteric fever.	Measles.	Relapsing fever (Spirochætal).	Kala-azar.	Influenza.	Other fevers.	Dysentery.	Diarrhœa.	Pneumonia.	Pulmonary Tuberculosis.	Other respiratory diseases.	Injuries including suicide.	Deaths from child-birth.	Other causes.	Total of all causes.			Total of corresponding week of the previous year.		
																											Male.	Female.	Total.	Male.	Female.	Total.
Calcutta ..	1	Calcutta ..	778,817	362,045	1,140,862	440	47	28	24	..	7	17	26	3	..	2	8	27	41	15	109	65	50	15	3	265	379	326	705	302	257	559
Burdwan ..	2	Asansol Mining Settlement.	209,544	173,136	382,680	71	1	1	1	..	..	..	1	..	..	..	..	6	..	2	7	..	..	1	..	15	22	12	34	67	48	115
Howrah ..	3	Howrah ..	145,120	79,753	224,873	119	3	5	3	..	..	..	2	..	..	..	..	..	8	5	17	7	20	5	..	48	72	48	120	64	50	114
Dacca ..	4	Dacca ..	79,365	59,153	138,518	73	1	..	..	..	..	..	1	..	..	3	..	..	5	3	6	..	7	1	..	18	31	13	44	27	19	46
24-Parganas	5	Bhatpara ..	60,134	24,841	84,975	31	1	..	..	..	..	..	1	..	..	..	..	14	1	1	9	1	..	..	..	11	24	14	38	14	13	27
	6	Garden Reach.	36,131	19,741	55,872	13	..	..	..	..	..	2	..	..	..	..	..	..	..	1	2	..	1	..	..	3	5	4	9	..	..	..
Chittagong ..	7	Chittagong	35,049	18,107	53,156	36	4	1	..	..	..	1	1	..	..	2	..	9	3	..	..	1	1	5	1	10	19	16	35	14	7	21

A. C. CHATTERJI, M.B., D.P.H., MAJOR, I.M.S., *Director of Public Health, Bengal.*

Calcutta, the 9th July 1936.

IRRIGATION DEPARTMENT.

Statement showing heights above P. W. D. datum and low water in the rivers Ganges, Bhagirathi, Jalangi and Brahmaputra for the month

Date.	River Ganges.											
	Mirzapur. Zero of gauge is 200·00 ft. above P. W. D. datum.		Benares. Zero of gauge is 197·05 ft. above P. W. D. datum.		Buxar.* Zero of gauge is 169·91 ft. above Bengal P. W. D. datum.		Dinapore. Zero of gauge is 135·51 ft. above P. W. D. datum.		Monghyr. Zero of gauge is at P. W. D. datum.		Rajmahal. Zero of gauge is 5·98 ft.	
	Distance in miles.	From Allahabad, 86.	From Allahabad, 134.	From Mirzapur, 48.	From Benares, 90.		From Benares, 177.	From Buxar, 87.	From Benares, 287.	From Dinapore, 110.	From Benares, 407.	From Monghyr, 120.
	Highest gauge reading.	2nd September 1916. 265·97 ft.	2nd September 1916. 244·55 ft.		7th September 1919. 203·40 ft.		21st August 1923. 172·41 ft.		8th September 1901. 129·60 ft.		15th August 1913. 90·37 ft.	
	Lowest gauge reading.	11th April 1878. 198·92 ft.	20th May 1879. 191·70 ft.		15th May 1914. 161·65 ft.		20th April 1902. 130·11 ft.		2nd May 1914. 95·75 ft.		30th April 1936. 54·97 ft.	
		Height above zero of gauge.	Height above P. W. D. datum.	Height above zero of gauge.	Height above P. W. D. datum.	Height above zero of gauge.	Height above P. W. D. datum.	Height above zero of gauge.	Height above P. W. D. datum.	Height above zero of gauge.	Height above P. W. D. datum.	Height above zero of gauge.	Height above P.W.D datum.
1	2	3	4	5	6	7	8	9	10	11	12	13	14
1st	..	11·25	211·25	Below zero 1·58	195·47	1·58	171·49	8·90	144·41	99·10	99·10	61·40	55·42
2nd	..	11·21	211·21	1·58	195·47	1·58	171·49	8·80	144·31	99·00	99·00	61·50	55·52
3rd	..	11·21	211·21	1·58	195·47	1·58	171·49	8·80	144·31	99·00	99·00	61·50	55·52
4th	..	11·17	211·17	1·67	195·36	1·58	171·49	8·80	144·31	98·90	98·90	61·50	55·52
5th	..	11·17	211·17	1·75	195·30	1·58	171·49	8·80	144·31	98·90	98·90	61·55	55·57
6th	..	11·17	211·17	1·75	195·30	1·58	171·49	8·80	144·31	98·80	98·80	61·55	55·57
7th	..	11·17	211·17	1·83	195·22	1·58	171·49	8·80	144·31	98·80	98·80	61·55	55·57
8th	..	11·12	211·12	1·83	195·22	1·58	171·49	8·80	144·31	98·70	98·70	61·55	55·57
9th	..	11·12	211·12	1·83	195·22	1·58	171·49			98·70	98·70	61·60	55·62
10th	..	11·12	211·12	1·83	195·22	1·58	171·49			98·60	98·60	61·60	55·62
11th	..	11·12	211·12	1·92	195·13	1·58	171·49			98·60	98·60	61·60	55·62
12th	..	11·12	211·12	1·92	195·13	1·58	171·49			98·50	98·50	61·55	55·57
13th	..	11·12	211·12	1·92	195·13	1·58	171·49			98·50	98·50	61·45	55·47
14th	..	11·12	211·12	1·92	195·13	1·50	171·41			98·50	98·50	61·35	55·37
15th	..	11·12	211·12	1·92	195·13	1·42	171·33			98·40	98·40	61·25	55·27
16th	..	11·08	211·08	2·00	195·05	1·42	171·33			98·30	98·30	61·20	55·22
17th	..	11·08	211·08	2·00	195·05	1·42	171·33			98·30	98·30	61·20	55·22
18th	..	11·04	211·04	2·00	195·05	1·33	171·24			98·20	98·20	61·15	55·17
19th	..	11·04	211·04	2·00	195·05	1·33	171·24	8·80	144·31	98·20	98·20	61·10	55·12
20th	..	11·00	211·00	2·08	194·97	1·33	171·24	8·80	144·31	98·10	98·10	61·10	55·12
21st	..	11·00	211·00	2·08	194·97	1·33	171·24	8·80	144·31	98·10	98·10	61·05	55·07
22nd	..	10·96	210·96	2·17	194·88	1·25	171·16	8·80	144·31	98·10	98·10	61·10	55·12
23rd	..	10·92	210·92	2·17	194·88	1·25	171·16	8·80	144·31	98·00	98·00	61·10	55·12
24th	..	10·87	210·87	2·17	194·88	1·25	171·16	8·80	144·31	98·00	98·00	61·10	55·12
25th	..	10·83	210·83	2·17	194·88	1·25	171·16	8·80	144·31	98·00	98·00	61·10	55·12
26th	..	10·83	210·83	2·25	194·80	1·25	171·16	8·80	144·31	98·00	98·00	61·05	55·07
27th	..	10·79	210·79	2·25	194·80	1·17	171·08	8·80	144·31	98·00	98·00	61·05	55·07
28th	..	10·75	210·75	2·33	194·72	1·17	171·08	8·80	144·31	98·00	98·00	61·05	55·07
29th	..	10·71	210·71	2·42	194·63	1·17	171·08	8·80	144·31	97·90	97·90	61·00	55·02
30th	..	10·71	210·71	2·42	194·63	1·08	170·99	8·80	144·31	97·80	97·80	60·95	54·97
Average level	..	11·03	211·03	1·98 Below zero	195·07	1·42	171·33	8·81	144·32	98·40	98·40	61·29	55·31

Remained closed for silt-clearance.

Note.—Since the 1st January 1929 the datum of all gauges has been finally altered to refer to the Bengal Public Works Department datum which is 9·25 applied to all reduced levels recorded since each gauge was established have been prepared.

*The zero of the Buxar gauge has been checked from the G. T. S. Bench marks Nos. 125 and 126 on line 70K and found to be 169·91 feet above the Bengal

†On and from 1st January 1931, High water level and low water level readings are shown at Swarupganj.

The 3rd July 1936.

BENGAL.

of April 1936, and the highest reading of each gauge above P. W. D. datum as well as the lowest gauge reading since 1876.

				River Bhagirathi.		River Jalangi.				River Brahmaputra.	
Rampur-Boalia. Zero of gauge is 32·25 ft. above P. W. D. datum.		Godagari. Zero of gauge is 1·409 ft. above Bengal P. W. D. datum.		Berhampore. Zero of gauge is at P. W. D. datum.		Swarupganj.† Zero of gauge is at P. W. D. datum.				Gauhati. Zero of gauge is 129·958 ft. above P. W. D. datum.	
From Benares, 471.	From Kalunhal 64.	From Benares, 591.	From Rampur-Boalia, 120.								
28th August 1879. 64·24 ft.		16th August 1931. 29·60 ft.		14th August 1890. 63·46 ft.		25th September 1900. 35·30 ft.				24th August 1906. 160·25 ft.	
24th April 1934. 32·05 ft.		8th February 1914. 2·41 ft.		26th May 1884. 32·00 ft.		7th May 1896. 2·11 ft.				14th and 15th February 1936 129·058 ft.	
Height above zero of gauge.	Height above P. W. D. datum.	Height above zero of gauge.	Height above P. W. D. datum.	Height above zero of gauge.	Height above P. W. D. datum.	Height above zero of gauge.		Height above P.W.D. datum.		Height above zero of gauge.	Height above P. W. D. datum.
						H. W. L.	L. W. L.	H. W. L.	L. W. L.		
15	16	17	18	19	20	21	22	23	24	25	26
2·20	34·45	8·40	9·809	34·05	34·05	3·57	3·39	3·57	3·39	Below zero. 5·90	131·058
2·20	34·45	8·30	9·709	34·05	34·05	3·51	3·36	3·51	3·36	6·00	130·958
2·20	34·45	8·10	9·509	34·10	34·10	3·60	3·36	3·60	3·36	5·10	131·858
2·15	34·40	8·30	9·709	34·10	34·10	3·88	3·39	3·88	3·39	4·70	132·258
2·15	34·40	8·50	9·909	34·10	34·10	4·74	3·72	4·74	3·72	4·10	132·858
2·20	34·45	8·90	10·309	34·05	34·05	5·70	4·27	5·70	4·27	2·20	134·758
2·20	34·45	9·20	10·609	34·05	34·05	5·75	4·18	5·75	4·18	0·30	136·658
2·20	34·45	9·40	10·809	34·05	34·05	5·48	4·20	5·48	4·20	Above zero. 0·40	137·358
2·25	34·50	9·30	10·709	34·05	34·05	5·82	4·39	5·82	4·39	1·95	138·908
2·30	34·55	9·50	10·909	34·05	34·05	5·60	4·35	5·60	4·35	3·50	140·458
2·30	34·55	9·70	11·109	34·00	34·00	5·02	4·04	5·02	4·04	4·10	141·058
2·30	34·55	10·00	11·409	34·00	34·00	4·56	3·83	4·56	3·83	3·60	140·558
2·30	34·55	10·30	11·709	34·00	34·00	4·24	3·63	4·24	3·63	3·30	140·258
2·25	34·50	10·50	11·909	34·00	34·00	3·85	3·45	3·85	3·45	3·40	140·358
2·20	34·45	10·80	12·209	34·00	34·00	3·69	3·37	3·69	3·37	4·50	141·458
2·15	34·40	11·30	12·709	34·00	34·00	3·67	3·34	3·67	3·34	3·10	140·058
2·05	34·30	11·10	12·509	34·00	34·00	3·68	3·30	3·68	3·30	3·00	139·858
2·00	34·25	11·20	12·609	33·95	33·95	3·94	3·40	3·94	3·40	0·95	137·908
1·95	34·20	11·40	12·809	33·95	33·95	4·40	3·68	4·40	3·68	Below zero. 0·90	136·058
1·90	34·15	11·40	12·809	34·00	34·00	5·15	4·05	5·15	4·05	0·40	136·558
1·85	34·10	11·40	12·809	34·00	34·00	6·04	4·63	6·04	4·63	0·60	136·358
1·80	34·05	11·40	12·809	34·00	34·00	6·78	5·04	6·78	5·04	1·20	135·758
1·80	34·05	11·40	12·809	34·00	34·00	6·90	5·16	6·90	5·16	1·30	135·658
1·80	34·05	11·20	12·609	34·00	34·00	6·64	5·06	6·64	5·06	0·80	136·158
1·80	34·05	11·00	12·409	34·00	34·00	6·20	4·79	6·20	4·79	0·30	136·658
1·80	34·05	10·80	12·209	33·95	33·95	5·60	4·53	5·60	4·53	0·10	136·858
1·80	34·05	10·70	12·109	33·95	33·95	5·10	4·28	5·10	4·28	Above zero. 2·20	139·158
1·75	34·00	10·40	11·809	33·95	33·95	4·80	4·00	4·80	4·00	4·10	141·058
1·70	33·95	10·30	11·709	33·95	33·95	4·34	3·82	4·34	3·82	3·90	140·858
1·70	33·95	10·20	11·609	33·95	33·95	4·22	3·61	4·22	3·61	3·85	140·808
2·04	34·29	10·13	11·539	34·01	34·01	4·88	3·99	4·88	3·99	0·43	137·388

reduced above the Kidderpore Old Dock Sill. The values of the highest and lowest readings have similarly been altered. Printed notes on the correction to be P. W. D. datum.

J. F. RUSSELL, *Personal Assistant to the Chief Engineer to the Government of Bengal, Irrigation Department.*

Statement of weekly gauge readings on the river Ganges at Rampur Boalia for the week ending the 4th July 1936.

Date.	Hour	Height of surface above P. W. D datum.	Height of surface above P. W. D. datum on the same date last year.	Remarks.
1936				
28th June ..	7 a m.	41·37	40·30	Value of B. M. on Rajshahi College step = 64 73 P. W. D. Zero of gauge = 0 37 P W D up to 29-6-1936 and afterwards = 0 00 P W D
29th „	7 „	44 87	40 45	
30th „	7 „	46·30	40 50	
1st July	7 „	47 00	40 65	
2nd „	7 „	47·40	41·15	
3rd „	7 „	47·90	41·70	
4th „	7 „	48 60	42·15	

Highest recorded level on 26-8 1879 = 64 24.
Lowest recorded level on 24-4-1931 = 32·05.

GUPTA, *Subdivisional Officer,*
Irrigation Department, Rajshahi.

Rampur Boalia, the 4th July 1936.

Printed and published by the Superintendent, Government Printing, Bengal Government Press, Alipore, Bengal, on the 16th July 1936.

Registered No. C207

The Calcutta Gazette

Extraordinary

Published by Authority

SATURDAY, JULY 18, 1936.

GOVERNMENT OF INDIA.

Legislative Department.

Simla, the 18th July, 1936.

NOTIFICATION.

No. F-101-XVIII/36-C. & G.—A vacancy having occurred in the Legislative Assembly by reason of the acceptance by the Governor General of the resignation of his office by Sir Darcy Lindsay, Kt., C.B.E., a member elected to the said Assembly by the Bengal (European) Constituency, the Governor General is pleased, in pursuance of the provisions of sub-rule (*1*) of rule 26 of the Legislative Assembly Electoral Rules, to call upon the Bengal (European) Constituency to elect, in accordance with the said Rules, a person for the purpose of filling the said vacancy on or before the 20th September 1936.

G. H. SPENCE,

Secy. to the Govt. of India.

GOVERNMENT OF BENGAL.

Appointment Department.

NOTIFICATION.

No. 6104A.—18th July 1936.—Whereas by notification No. F-101-XVIII/36-C. & G., dated the 18th July 1936, the Governor General has been pleased to call upon the Bengal (European) Constituency of the Legislative Assembly to elect a member to the said Assembly in the place of Sir Darcy Lindsay, Kt., C.B.E., resigned:

Now, therefore, the Governor in Council is pleased, in exercise of the powers conferred by clauses (*a*) and (*b*) of sub-rule (*2*) of rule 11 of the Legislative Assembly Electoral Rules, and in pursuance of sub-rule (*3*) of that rule, to appoint the 30th July 1936 as the date for the nomination of candidates and for the delivery of nomination papers to the Returning Officer and the 3rd August 1936 as the date on which the scrutiny of nominations shall be held.

H. J. TWYNAM,

Chief Secy. to the Govt. of Bengal (offg.).

Printed and published by the Superintendent, Government Printing Bengal Government Press, Alipore, Bengal, on the 18th July 1936.

Registered No. C207

BENG. LEGISLATIVE LIBRARY 14.9.36

No. 30 of 1936

The Calcutta Gazette

Published by Authority

THURSDAY, JULY 23, 1936

CONTENTS:

	Page.
Part I —Orders and Notifications by the Governor of Bengal, the Government of Bengal, the High Court, Government Treasury, etc	1749—1788
Part IA —Orders and Notifications by the Government of India republished for general information	191—196
Part IB —Educational Notices	1195—1214
Part II.—Advertisements	691—696
Part III —Acts of the Bengal Legislative Council	Nil
Part IV —Bills introduced in the Bengal Legislative Council, Reports of Select Committees presented or to be presented to that Council, and Bills published before introduction in that Council	Nil
Part V —Acts of the Indian Legislature assented to by the Governor General and Ordinances promulgated under section 72 of the Government of India Act	Nil
Part VI —Bills introduced in the Council of State and Legislative Assembly, Reports of Select Committees presented to the Council and Assembly and Bills published under rule 18 of the Indian Legislative Rules	Nil
Supplement No 30 :—	
Report on Public Instruction in Bengal for the year 1934-35	995—1034
Weekly Gauge Readings—Monthly Weather and Crop Report—Weekly Weather and Crop Report—Weekly Vital Statistics Area leased for irrigation—Major and Minor Works and Navigation Cotton Ginning and Pressing Corporation of Calcutta Notice	1035—1046
Resolution on the Report on the Administration of the Jail Department of the Presidency of Bengal for the year 1935	1047—1049
Resolution on the Report on the working of the Bengal Children Act, 1922, the Bengal Suppression of Immoral Traffic Act, 1933, the Reformatory Schools Act of 1897 and the Bengal Borstal Schools Act, 1928	1050—1055

PART I

Orders and Notifications by the Governor of Bengal, the Government of Bengal, the High Court, Government Treasury, etc.

Orders by the Government of Bengal.

No. 6220A.

Appointments and Transfers.

General.

No. 6066A.—14th July 1936 —The services of Mr. S. N Roy, No I, O I E, I C S, are placed at the disposal of the Government of India in the Department of Industries and Labour.

Mymensingh-Tippera. No 6100A - 15th July 1936 Maulvi Mahbubuddin Ahmad, Deputy Magistrate and Deputy Collector, Mymensingh, is transferred to the headquarters station of the Tippera district

Pabna. No. 6119A. 16th July 1936 — Khan Bahadur Muhammad Mahmūd, Deputy Magistrate and Deputy Collector, Pabna, is appointed to act, until further orders, as Magistrate and Collector of that district.

24-Parganas.—No. 6162A.—17th July 1936.—The services of Mr. B. K. Basu, I.C.S., Additional District and Sessions Judge, 24-Parganas, are placed at the disposal of the Government of Assam.

Hooghly.—No. 6168A.—17th July 1936.—Mr. S. S. R. Hattiangadi, I.C.S., is appointed temporarily to act as Additional District and Sessions Judge, Hooghly.

ECCLESIASTICAL.

Calcutta.—No. 6071A.—14th July 1936.—The Reverend Canon C. G. Pearson was appointed to be Chaplain in visiting charge of the Presidency General Hospital, Calcutta, from the 1st June to the 30th June 1936, both days inclusive.

Calcutta.—No. 6073A.—14th July 1936.—The Reverend T. B. Randolph, Senior Chaplain, St. Paul's Cathedral, Calcutta, is appointed to be Chaplain in visiting charge of the Presidency General Hospital, Calcutta, with effect from the 1st July 1936.

Confirmation.

POLICE.

No. 6127A.—16th July 1936.—Mr. G. Walker, I.P., probationary Assistant Superintendent of Police, is confirmed in the inferior scale of the Indian Police, with effect from the 22nd June 1936.

Leave.

GENERAL.

24-Parganas.—No. 5996A.—13th July 1936.—Babu Kshiti Nath Ghosh, Sub-Deputy Collector, 24-Parganas, is allowed leave on average pay for three months, under the proviso to rule 81(*b*)(*ii*) of the Fundamental Rules, with effect from the date on which he may avail himself of it.

Burdwan.—No. 6055A.—13th July 1936.—Mr. E. R. Kitchin, I.C.S., Assistant Magistrate, Burdwan, was allowed leave on average pay for seven days, under rule 81(*b*)(*i*) of the Fundamental Rules, with effect from the 25th June 1936.

Khulna.—No. 6062A.—14th July 1936.—Babu Kuladaranjan Das Sarkar, Deputy Magistrate and Deputy Collector, Satkhira, Khulna, is allowed leave on average pay for three months, under rule 81(*b*)(*ii*) of the Fundamental Rules, with effect from the date on which he may be relieved.

24-Parganas. — No. 6110A.—16th July 1936. — Mr. H. G. S. Bivar, I.C.S., President, Special Tribunal, Alipore, 24-Parganas, is allowed leave on average pay for twenty-seven days, under rule 81 (*b*) (*i*) of the Fundamental Rules, with effect from the 29th June 1936.

24-Parganas.—No. 6113A. — 16th July 1936. — Mr. E. G. Creek, I.C.S., Joint Magistrate and Deputy Collector, Diamond Harbour, 24-Parganas, is allowed leave on average pay for six weeks, under rule 81 (*b*) (*i*) of the Fundamental Rules, with effect from the 16th June 1936.

Pabna. — No. 6116A. — 17th July 1936. — Mr. L. C. Guha, Magistrate and Collector, Pabna, is allowed leave on average pay, under rule 81(*b*)(*ii*) of the Fundamental Rules, from the 14th August 1936 or any subsequent date on which he may avail himself of it, up to the 13th December 1936.

No. 6121A. — 16th July 1936. — Babu Heramba Nath Bhattacharji, Sub-Deputy Collector, is allowed leave on average pay for two months, under rule 81 (*b*) (*ii*) of the Fundamental Rules, in extension of the leave granted to him under the orders of the 22nd June 1936.

Howrah.—No. 6147A.—17th July 1936.—Maulvi Saiyid Ghulam Kabir, Deputy Magistrate and Deputy Collector, Howrah, is allowed leave on average pay for twenty days, under rule 81(*b*) (*ii*) of the Fundamental Rules, with effect from the 29th June 1936.

No. 6173A.—18th July 1936.—In modification of the orders of the 25th June 1936, Maulvi Abu Hamid Nurul Huda, Sub-Deputy Collector, is allowed leave on average pay up to the 7th June 1936, under rule 81(*b*)(*ii*) of the Fundamental Rules, in extension of the leave granted to him under the orders of the 9th April 1936.

No. 6177A.—18th July 1936.—Mr. E. F. McInerny, I.C.S., is allowed leave on half average pay for five months and sixteen days, under rule 81(*d*) of the Fundamental Rules, with effect from the 31st March 1936.

POLICE.

Bakarganj.—No. 6058A.—14th July 1936.—Mr. Muhammad Abdul Hai Maswood. I.P., Assistant Superintendent of Police, on probation, Bakarganj, is allowed leave on average pay for one month, under rule 81(*b*)(*ii*) of the Fundamental Rules, with effect from the 27th June 1936.

No. 6138A.—16th July 1936.—Mr. R. Higgins, I.P., has been granted by the High Commissioner for India an extension of leave on half average pay for two months.

H. J. TWYNAM,

Chief Secy. to the Govt. of Bengal (offg.).

Reforms.

NOTIFICATION.

No. 4389A.R.—16th July 1936. — In exercise of the power conferred by the proviso to rule 3 of the Bengal Legislative Assembly Electoral (Preparation, Revision and Publication of Electoral Rolls) Rules, 1936, read with paragraph 26 of Part I of the Government of India (Provincial Legislative Assemblies) Order, 1936, and of all other powers enabling him in that behalf, the Governor in Council is pleased to authorise the Additional Subdivisional Magistrates mentioned

below to perform all the functions of the Returning Officer in the constituencies noted against each :—

	Constituencies.
I. Additional Sadar Subdivisional Magistrate, Chittagong.	1. Chittagong South (Muhammadan Rural) constituency comprising the Satkania, Banskhali and Anwara police-stations of the Sadar subdivision of the Chittagong district.
	2. Chittagong South Central (Muhammadan Rural) constituency comprising the Patiya, Boalkhali and Rangania police-stations of the Sadar subdivision of the Chittagong district.
II. Additional Sadar Subdivisional Magistrate, Tippera.	1. Tippera North (Muhammadan Rural) constituency comprising the Debidwar and Muradnagar police-stations of the Sadar subdivision of the Tippera district.
	2. Tippera West (Muhammadan Rural) constituency comprising the Homna and Daudkandi police-stations of the Sadar subdivision of the Tippera district.

R. N. GILCHRIST,

Reforms Commr. and Joint Secy. (ex-officio) to the Govt. of Bengal.

POLITICAL DEPARTMENT.

Political.

NOTIFICATION.

Chittagong.— No. 11566P.— 21st July 1936. —Whereas it appeared to the District Magistrate of Chittagong that the letting off of bombs or fireworks in Chittagong was likely to cause obstruction to the authorities responsible for the preservation of the public tranquillity and whereas he issued an order, dated the 28th September 1932, under section 144 of the Code of Criminal Procedure, 1898, directing all persons to abstain from letting off any bombs or fireworks within the police-stations of Kotwali, Double Moorings and Panchalaish :

And whereas it appears to the local Government that the conditions in Chittagong which led to the issue by the District Magistrate of the aforesaid order still continue and that the letting off of bombs or fireworks is likely to cause a danger to human life or safety :

Now, therefore, in exercise of the power conferred by section 144(5) of the Code of Criminal Procedure, it is hereby directed that the said order shall remain in force for a further period of two months with effect from the 27th July 1936.

H. J. TWYNAM,

Chief Secy. to the Govt. of Bengal (offg.).

Jails.

Orders by the Inspector-General of Prisons, Bengal.

No. 17476.—20th July 1936. Dr. J. N. Basu made over charge of the Rangpur Jail to Dr. J. K. Sen Gupta on the forenoon of the 12th July 1936

R. E. FLOWERDEW, LT.-COL., I.M.S.,

Inspector-General of Prisons, Bengal.

JUDICIAL DEPARTMENT.

No. 6221A.

Powers.

Chittagong.—No. 6087A.—15th July 1936.—Mr. F. A. Karim, I.C.S., Joint Magistrate and Deputy Collector, Chittagong, is vested with the powers of a Subordinate Judge within that district.

Hooghly.— No. 6123A. 16th July 1936. — Babu Haran Chandra Sen, Deputy Magistrate, Hooghly, is vested, under section 407 (2) of the Code of Criminal Procedure, with the power to hear appeals from the decisions of the Magistrates of the second and third classes.

Hooghly.— No. 6143A. — 16th July 1936. — Babu Surendra Nath Sen Gupta, No. II, Sub-Deputy Magistrate, Hooghly, is vested with the powers of a Magistrate of the second class.

Faridpur-Tippera-Nadia-Howrah-24-Parganas-Chittagong - Mymensingh - Murshidabad. — No. 6187A.—17th July 1936.—The officers named below are vested with the powers of an Assistant Sessions Judge :

Babu Surendra Chandra Basu, officiating Subordinate Judge, Faridpur.

Babu Dwarka Nath De, officiating Subordinate Judge, Tippera.

Babu Banku Bihari Chatarji, officiating Additional Subordinate Judge, Nadia.

Babu Dhirendra Nath Guha, officiating Subordinate Judge, Howrah.

Babu Sitesh Chandra Sen, officiating Subordinate Judge, 24-Parganas.

Babu Upendra Chandra Majumdar, officiating Subordinate Judge, Chittagong.

Babu Priya Nath Basu, officiating Subordinate Judge, Mymensingh.

Babu Dwijendra Nath Pal, officiating Subordinate Judge, Murshidabad.

H. J. TWYNAM,

Chief Secy. to the Govt. of Bengal (offg.).

Appointments and Transfers.

Midnapore.—No. 5392J.—13th July 1936.—In exercise of the powers conferred by sections 14 and 15 and the proviso to section 357 of the Code of Criminal Procedure, 1898 (Act V of 1898), the Governor in Council is pleased :—

(*a*) to confer upon Babu Radha Gobinda Pal the powers of a Magistrate of the second class, in the district of Midnapore, for a period of three years from the 1st August 1936, in respect to such cases as may be made over to him within the limits of the Sadar subdivision of the said district,

(*b*) to direct that he shall, in addition to sitting singly, sit as a member of the Sadar Bench in the said district, and

(*c*) to direct him to take down evidence in the English language.

Burdwan.—No. 5394J.—14th July 1936.—Babu Gobinda Chandra Chakrabatti, Subordinate Judge and Assistant Sessions Judge, on leave, is appointed to be Subordinate Judge and Assistant Sessions Judge of Burdwan, *vice* Babu Abani Prasad Neogi.

24-Parganas-Dinajpur-Jalpaiguri.—No. 5397J.—14th July 1936.—Babu Kumud Bandhu Sen, Subordinate Judge and Assistant Sessions Judge of the 24-Parganas, is appointed to be Subordinate Judge and Assistant Sessions Judge of Dinajpur and Jalpaiguri, *vice* Babu Santosh Sil Banarji.

24-Parganas.—No. 5400J.—14th July 1936.—Babu Surendra Nath Mitra, Second Additional Subordinate Judge and Assistant Sessions Judge of the 24-Parganas, is appointed to be Subordinate Judge and Assistant Sessions Judge of the said district, *vice* Babu Kumud Bandhu Sen.

Dacca-Mymensingh.—No. 5403J.—14th July 1936.—Babu Mayataru Haldar, Subordinate Judge and Assistant Sessions Judge of Dacca, is appointed to be Subordinate Judge and Assistant Sessions Judge of Mymensingh, *vice* Babu Subodh Chandra Datta.

Burdwan-Dacca.—No. 5406J.—14th July 1936.—Babu Manmatha Kumar Ray, munsif of Katwa, in the district of Burdwan, is appointed to act, until further orders, as Subordinate Judge of Dacca, *vice* Babu Mayataru Haldar.

Burdwan.—No. 5409J.—14th July 1936.—Babu Dhirendra Nath Bagchi, munsif, on leave, is appointed to be a munsif in the district of Burdwan, to be ordinarily stationed at Katwa, *vice* Babu Manmatha Kumar Ray.

Howrah-Hooghly.—No. 5412J.—14th July 1936.—Maulvi Velayet Hossain Mollah, munsif of Howrah, is appointed temporarily to be a munsif of Arambagh, in the district of Hooghly, during the absence, on leave, of Babu Prabodh Chandra Ghosh.

Howrah. No. 5471J.—14th July 1936.—In exercise of the powers conferred by sections 14 and 15 and the proviso to section 357 of the Code of Criminal Procedure, 1898 (Act V of 1898), the Governor in Council is pleased—

(*a*) to confer upon Babu Charu Chandra Pal the powers of a Magistrate of the third class, in the district of Howrah, for a period of three years from the 16th August 1936,

(*b*) to direct him to sit as a member of the Sadar bench in the said district, and

(*c*) to direct him to take down evidence in the English language.

Nadia.—No. 5531J.—17th July 1936.—In exercise of the powers conferred by sections 14 and 15 and the proviso to section 357 of the Code of Criminal Procedure, 1898 (Act V of 1898), the Governor in Council is pleased—

(*a*) to confer upon Babu Jatindra Kumar Sen the powers of a Magistrate of the third class, in the district of Nadia, for a period of three years from the date of this notification,

(*b*) to direct him to sit as a member of the Chuadanga bench in the said district, and

(*c*) to direct him to take down evidence in the English language.

Jessore.—No. 5560J.—18th July 1936.—In exercise of the powers conferred by sections 14 and 15 and the proviso to section 357 of the Code of Criminal Procedure, 1898 (Act V of 1898), the Governor in Council is pleased—

(*a*) to confer upon Babu Ganesh Chandra Ghosh the powers of a Magistrate of the third class, in the district of Jessore, for a period of three years from the date of this notification,

(*b*) to direct him to sit as a member of the Narail bench in the said district, and

(*c*) to direct him to take down evidence in the English language.

Leave.

No. 5516J.—17th July 1936.—Babu Sharat Chandra Mukharji, Subordinate Judge and Assistant Sessions Judge, is allowed leave for one month in extension of the leave already granted to him, as follows, viz., leave on average pay for fifteen days, under Fundamental Rules 81 (*b*) (*ii*) and 82 (*b*), and on half average pay for the remaining period, under rule 81 (*d*) of those Rules.

Resignation.

Burdwan.—No. 5519J.—17th July 1936.—The Governor in Council is pleased to accept the resignation tendered by Pandit Krishna Prasad Kalia of his appointment as an Honorary Magistrate of the Raniganj bench in the district of Burdwan.

NOTIFICATIONS.

Calcutta.—No. 5564J.—18th July 1936.—In exercise of the power conferred by section 18 of the Parsi Marriage and Divorce Act, 1936 (III of 1936), the Governor in Council is pleased to constitute the Parsi Chief Matrimonial Court of Calcutta in the Presidency-town of Calcutta. The seal of the Court shall be that now used by the High Court of Judicature at Calcutta in the exercise of its ordinary original civil jurisdiction.

2. In exercise of the power conferred by section 22 of the said Act the Governor in Council is further pleased to declare that all the districts in the Presidency of Bengal where the Act is in force shall be included within the jurisdiction of the Parsi Chief Matrimonial Court of Calcutta.

3. In exercise of the power conferred by section 24 of the said Act the Governor in Council is also pleased to appoint the following persons to be delegates to aid in the adjudication of cases in the Parsi Chief Matrimonial Court of Calcutta, namely :—

Mr. C. H. M. Rustomjee.

Mr. J. J. Modi.

Mr. D. C. Driver.

Mr. E. S. Olpadwala.

Mr. M. C. Guzdar.

Mr. M. D. Darbari.

Mr. V. F. Viccaji.

Mr. A. Dinshaw.

Mr. G. T. Dastur.

Mr. D. Pestonji.

Mr. D. R. Billimoria.

Mr. K. E. Wadia.

Mr. J. D. Guzdar.

Mr. S. M. Oonvala.

Noakhali.—No. 5583J.—18th July 1936.—In exercise of the power conferred by section 65 of the Bengal Village Self-Government Act, 1919 (Bengal Act V of 1919), the Governor in Council is pleased to appoint Maulvi Md. Habibulla Mia, a member of the Banchhanagar union board within the Lakshmipur police-station in the Sadar subdivision of the Noakhali district, to be, during his term of office as such member, a member of the union bench within the jurisdiction of the said union board for the purposes of that section, *vice* Maulvi Abdul Majid Chaudhury, resigned.

T. ROXBURGH,

Secy. to the Govt. of Bengal (offg.).

LOCAL SELF-GOVERNMENT DEPARTMENT.

NOTIFICATIONS.

Minister-in-charge: The Hon'ble Sir Bijoy Prasad Singh Roy, Kt.

Bakarganj. — No. 5703L.S.-G. — 14th July 1936.—It is hereby notified for general information that, in exercise of the power conferred by section 10 of the Bengal Local Self-Government Act, 1885 (Bengal Act III of 1885), the Governor of Bengal (Ministry of Local Self-Government) are pleased to appoint the 21st, 22nd and 23rd September 1936 as dates for holding the second election for filling up the vacancy on the Patuakhali local board in the seat allotted to the Barguna police-station in the district of Bakarganj.

2. This cancels notification No. 4951L.S.-G., dated the 11th June 1936.

Jessore.—No. 5813M.—20th July 1936.—In exercise of the power conferred by section 506 of the Bengal Municipal Act, 1932 (Bengal Act XV of 1932), the Government of Bengal (Ministry of Local Self-Government) are pleased to confirm the by-laws framed by the Commissioners of the Jessore Municipality in the district of Jessore under section 392 (*i*) of the said Act and published for information under notification No. 1456M., dated the 4th March 1936.

24-Parganas.—No. 5818M.—20th July 1936.—In exercise of the power conferred by section 506 of the Bengal Municipal Act, 1932 (Bengal Act XV of 1932), the Government of Bengal (Ministry of Local Self-Government) are pleased to confirm the by-laws framed by the Commissioners of the Baranagar Municipality in the district of the 24-Parganas under section 434 of the said Act and published for information under notification No. 2535M., dated the 21st April 1936.

ADDENDUM.

Minister-in-charge: The Hon'ble Sir Bijoy Prasad Singh Roy, Kt.

No. 5736L.S.-G.—16th July 1936.—At the end of notification No. 1106L.S.-G., dated the 17th February 1936, published at pages 472-73, Part I of the *Calcutta Gazette*, dated the 5th March 1936, *add* the following :—

"4. This cancels notification No. 2337L.S.-G., dated the 6th August 1929.".

Medical.

Minister-in-charge: The Hon'ble Sir Bijoy Prasad Singh Roy, Kt.

Khulna.—No. 2978Medl.—15th July 1936.—Dr. Narendra Nath Ghosh, Civil Surgeon, Khulna, was granted leave on average pay for eight days, under rule 81 (*b*) (*ii*) of the Fundamental Rules, with effect from the 2nd April 1936.

Bankura.—No. 3007Medl.—16th July 1936.—Dr. Dhirendra Nath Sen of the Brahmanbaria subdivision and dispensary, on relief, is appointed as officiating Civil Surgeon, Bankura, *vice* Dr. Khagendra Benode Sinha, transferred.

Bankura-Tippera.—No. 3008Medl.—16th July 1936.—Dr. Khagendra Benode Sinha, officiating Civil Surgeon, Bankura, on relief, is posted to Comilla as officiating Civil Surgeon, Tippera, *vice* Dr. S. K. Mazumdar, granted leave.

Calcutta.—No. 3014Medl. — 17th July 1936. — Dr Pashupati Bose, Demonstrator of Anatomy, Medical College, Calcutta, is allowed earned leave for thirty-one days, under rule 10 of the Bengal Services Revision of Leave Rules, 1934, with effect from the 4th June 1936.

NOTIFICATION.

Minister-in-charge: The Hon'ble Sir Bijoy Prasad Singh Roy, Kt.

Khulna. — No. 3020Medl. — 17th July 1936.— The appointment of the following gentlemen as members of the committee for the management of the Ayurvedic Charitable Dispensary at Rayenda in the district of Khulna is notified for general information :—

The Subdivisional Officer, Bagerhat, *ex-officio.*

The Thana Officer, Sarankhola police-station *ex-officio.*

The President, Dhansagar union board.

The President, Rayenda union board.

The President, South-Khali union board.

Babu Sarat Kumar Raha, Tahsildar, Amragachi Kachari Law Estate.

The President, Khontakata union board.

The Manager, Reily Estate, Tafalbaria.

Babu Basanta Kumar Kar, Naib, Banagram Estate.

Babu Jogesh Chandra Das.

Public Health.

NOTIFICATIONS.

No. 2715P.H. — 16th July 1936. — For the purposes of the Paris Sanitary Convention, 1926, and with reference to rule 1 (*5*) of the rules framed under section 6, sub-section (*1*), clause (*p*) of the Indian Ports Act, 1908 (Act XV of 1908), and published in Marine Department notification No. 16Mno., dated the 6th March 1917, the Governor in Council is pleased to declare Madras to be an infected port on account of cholera.

Minister-in-charge: The Hon'ble Sir Bijoy Prasad Singh Roy, Kt.

Howrah.—No. 2782P.H.—16th July 1936.— In pursuance of rule 8 of the rules for the preparation, publication and execution of projects for water-supply, sewerage or drainage by municipal authorities, it is hereby notified for general information that the scheme for the construction of an additional filter bed at the head works of the Howrah water-works at Serampore, has been approved by the Government of Bengal (Ministry of Public Health), and that the particulars of the said scheme are as follows :—

(*a*) The scheme is designed to increase the supply of water in the town of Howrah.

(*b*) The estimated cost of the scheme is Rs. 42,152 to be met from the surplus of the municipal fund.

(*c*) and (*d*) No extra cost of maintenance is involved.

2. The scheme will be taken into consideration on or after the 1st September 1936, and any objection or suggestion with regard thereto, which may be received by the undersigned before that date, will be duly considered.

G. S. DUTT,
Secy. to the Govt. of Bengal.

Orders by the Director of Public Health, Bengal.

Dacca.—No. 9640A.—16th July 1936.—Maulvi Badi Uzzaman, Assistant Analyst, Dacca Public Health Laboratory, is allowed an extension of leave on average pay for a period of one month in continuation of the leave previously granted to him under rule 81 (*b*) (*ii*) of the Fundamental Rules.

A. C. CHATTERJI, M.B., D.P.H., MAJOR, I.M.S.,
Director of Public Health, Bengal.

EDUCATION DEPARTMENT.

NOTIFICATIONS.

Darjeeling.—No. 2315Edn.—20th July 1936.— The Governor in Council is pleased to appoint Mr. H. A. Stark as the representative of the Provincial Board of Anglo-Indian and European Education, Bengal, on the combined Governing Body of the Victoria Boys' and Dow Hill Girls' Schools, Kurseong.

24-Parganas.—No. 2309Edn.—20th July 1936. —In exercise of the power conferred by section 7, sub-section (*1*), of the Bengal Children Act, 1922 (Ben. Act II of 1922), the Governor in Council is pleased to appoint the following persons to constitute the committee for the control and management of the Reformatory and Industrial Schools, Alipore, for a period of three years, with effect from the 1st June 1936 :—

(1) Mr. D. J. Cohen, M.L.C.
(2) The Director of Industries, Bengal.
(3) The Inspector-General of Prisons, Bengal.

(4) The Civil Surgeon, 24-Parganas.
(5) The Honorary Secretary to the Society for the Protection of Children in India.
(6) Mr. A. K. Chanda, M.A. (Oxon.), I.E.S.
(7) Mrs. A. N. Chaudhury.
(8) Mr. C. S. Paterson, M.SC., General Secretary, Y. M. C. A., Calcutta.
(9) Mr. J. Ahmed, Presidency Magistrate, Central Children Court, Calcutta.
(10) Mr. N. N. Bhose, B.A. (Cantab.), Bar.-at-Law, General Organising Secretary, Boy Scouts' Association, Calcutta.
(11) Mr. Amin Ahmed, Bar.-at-Law, Judge, Small Cause Court, Calcutta.
(12) Mr. J. W. Rouston, Jessop & Co., Ltd., Calcutta.
(13) Mr. S. P. Chaudhury, Representative of the Bengal After-care Association for Juveniles and Adolescents.

The Superintendent of the Reformatory and Industrial Schools, Alipore, will act as Secretary, but he will not be a member of the committee.

Minister-in-charge: The Hon'ble Khan Bahadur M. Azizul Haque.

Chittagong.—No. 2254Edn.—14th July 1936.—Miss Suprava Das Gupta, Assistant Head Mistress, Dr. Khastagir's High School for Girls, Chittagong, is appointed to act in the Bengal Educational Service (Women's Branch) as Head Mistress of the school, with effect from the 1st August 1936, or any subsequent date on which she assumes the duties of the post, during the absence, on leave, of Miss Surama Biswas, or until further orders.

Calcutta.—No. 2302Edn.—18th July 1936.—Mr. Somnath Maitra, Professor of English, Presidency College, Calcutta, is allowed leave on average pay for four months, with effect from the 1st August 1936, or any subsequent date on which he avails himself of it, under Fundamental Rule 81(*b*)(*ii*), provided the leave is spent elsewhere than in India, Ceylon or Nepal, and thereafter leave on half average pay, under Fundamental Rule 81(*d*), for a period of three months and leave on half average pay, under Fundamental Rule 82(*c*), for the remaining period up to the date prior to the commencement of the summer vacation of the College, 1937, afixing the summer vacation to the leave under Fundamental Rule 82(*d*), provided the entire period of the vacation is spent *ex*-India.

Hooghly.—No. 2306Edn.—18th July 1936.—Babu Durgaprasanna Acharyya is confirmed in the Bengal Educational Service as a Professor of Physics in the Hooghly College, with effect from the 23rd March 1935, *vice* Babu Purna Chandra Bhattacharjee, retired.

Calcutta.—No. 2318Edn.—20th July 1936.—The Government of Bengal (Ministry of Education) are pleased to appoint Mr A. O. Brown, of Messrs. Mackinnon Mackenzie & Co., Calcutta, to be a member of the Governing Body of the Islamia College, Calcutta, for the remainder of its present term, *i.e.*, up to the end of the academic session 1937-38, *vice* the Hon'ble Sir George Campbell, Kt., resigned.

Registration.

NOTIFICATIONS.

Minister-in-charge: The Hon'ble Khan Bahadur M. Azizul Haque.

Pabna.—No. 461Regn.—18th July 1936.—In exercise of the power conferred by section 3 of the Bengal Muhammadan Marriages and Divorces Registration Act, 1876 (Bengal Act I of 1876), the Government of Bengal (Ministry of Education) are pleased to appoint Maulvi A. F. Md. Syedul Islam temporarily to be a Muhammadan Registrar within the police-station of Kazipur, in the district of Pabna, during the absence, on leave, of Maulvi Zahiruddin Ahmed, or until further orders.

Pabna.—No. 462Regn.—18th July 1936.—In exercise of the power conferred by section 2 of the Kazis' Act, 1880 (Act XII of 1880), the Government of Bengal (Ministry of Education) are pleased to appoint Maulvi A. F. Md. Syedul Islam temporarily to be the Kazi for the celebration of marriages and the performance of other rites and ceremonies within the police-station of Kazipur, in the district of Pabna, during the absence, on leave, of Maulvi Zahiruddin Ahmed, or until further orders.

Bakarganj.—No. 467 Regn.—18th July 1936.—In exercise of the power conferred by section 3 of the Bengal Muhammadan Marriages and Divorces Registration Act, 1876 (Bengal Act I of 1876), the Government of Bengal (Ministry of Education) are pleased to appoint Maulvi A.K. Abdul Jabbar Chaudhuri to be a Muhammadan Registrar within the Unions Nos. XII to XVIII of police-station Amtoli, in the district of Bakarganj.

Bakarganj.—No. 468 Regn.—18th July 1936.—In exercise of the power conferred by section 2 of the Kazis Act, 1880 (Act XII of 1880), the Government of Bengal (Ministry of Education) are pleased to appoint Maulvi A. K. Abdul Jabbar Chaudhuri to be the Kazi for the celebration of marriages and the performance of other rites and ceremonies within the Unions Nos. XII to XVIII of police-station Amtoli, in the district of Bakarganj.

Bakarganj.—No. 471 Regn.—18th July 1936.—In exercise of the power conferred by section 3 of the Bengal Muhammadan Marriages and Divorces Registration Act, 1876 (Bengal Act I of 1876), the Government of Bengal (Ministry of Education) are pleased to appoint Maulvi Habibur Rahman to be a Muhammadan Registrar within the police-stations of Bhandaria and Kathalia, in the district of Bakarganj.

Bakarganj.—No. 472 Regn.—18th July 1936.—In exercise of the power conferred by section 2 of the Kazis Act, 1880 (Act XII of 1880), the Government of Bengal (Ministry of Education) are pleased to appoint Maulvi Habibur Rahman to be the Kazi for the celebration of marriages and the performance of other rites and ceremonies within the police-stations of Bhandaria and Kathalia, in the district of Bakarganj.

Miscellaneous.

NOTIFICATION.

Minister-in-charge: The Hon'ble Khan Bahadur M. Azizul Haque.

No. 1766Mis.—13th July 1936.—In exercise of the power conferred by clause (*a*) of sub-section (*2*) of section 84 of the Bengal Wakf Act, 1934 (Bengal Act XIII of 1934), the Government of Bengal (Ministry of Education) are pleased to make the following rules regarding exemption of wakfs under section 4 of the said Act :—

Rules under section 84(2) (a) of the Bengal Wakf Act, 1934, regarding exemption of wakfs under section 4 of the said Act.

1. An application for exemption of any wakf property from the operation of all or any of the provisions of the Act under section 4 may be made by a mutwalli or any other person interested in the wakf as defined in sub-section (*8*) of section 6 of the said Act.

2. The application shall be made to the Commissioner and shall be accompanied by a fee of Rs. 5 or an amount equal to 2 per cent. of the gross income, whichever is greater ; and shall be signed and verified in the manner prescribed under section 44(7).

3. The application shall state clearly the grounds on which the exemption is prayed for and the provisions of the Act from which exemption is desired.

4. On receipt of such an application the Commissioner shall enter it in the register prescribed by the Board. He may in his discretion cause it to be published in the *Calcutta Gazette* and/or post a copy thereof in his own office and in the office of the Collector of the district in which the greater portion of the land comprised in the wakf is situated inviting objections, if any, within thirty days of its publication in the gazette or in the office of the Commissioner or the Collector, whichever is later.

5. After hearing such objections and after making further enquiries, if any, the Commissioner shall forward the application to the Board with his recommendation.

6. In refusing or recommending exemption the Commissioner may take into consideration :—

(*a*) The nature, size and importance of the wakf.

(*b*) Whether the properties are well managed or otherwise.

(*c*) Whether the beneficiaries and persons interested in the wakf have confidence in the management.

(*d*) Whether there are provisions for any public charities, and, if so, what is the extent and scope of those provisions.

(*e*) Whether the income of the wakf is sufficient to bear the burden of the levy or the costs of any annual or periodical audit of the accounts.

(*f*) What the amount of levy under section 59 of the Act would be if the exemption be not allowed ; and

(*g*) Whether the exemption applied for would be beneficial or detrimental to the interest of the wakf itself.

7. If the Board decide to grant the exemption prayed for, the Commissioner shall then forward the case to the Local Government for their sanction, with a statement of the Board's reasons for granting the exemption, together with a copy of the report of the investigation made under rule 4 and with such further remarks as he may wish to offer.

8. The Local Government may consider the case on its merits and may grant or refuse sanction.

H. GRAHAM,

Secy. to the Govt. of Bengal.

Orders by the Director of Public Instruction, Bengal.

Darjeeling.—No. 36-B.—10th July 1936.—Mr. E. V. Staynor, Mathematics Master, Victoria Boys' School, Kurseong, is granted leave, on average pay, for two months, under Fundamental Rules 81(*b*)(*ii*) and 82(*b*), with effect from 21st June 1936.

Bengal Educational Service.

Faridpur.—No. 37-B.—13th July 1936.—Babu Kshirode Chandra Sen Gupta, District Inspector of Schools, Faridpur, in the Bengal Educational Service, is declared to have been on leave on average pay, under Fundamental Rule 81(*b*)(*ii*) for one month and seven days, with effect from 28th May 1936.

J. M. BOTTOMLEY,
Director of Public Instruction, Bengal.

Orders by the Inspector-General of Registration, Bengal.

24-Parganas.—No. 403.—7th July 1936.—Babu Ramesh Chandra Das Gupta, Sub-Registrar of Kakdwip, in the district of the 24-Parganas, is allowed leave on average pay for six days, under rule 81 (*b*) (*ii*) of the Fundamental Rules, with effect from the 6th July 1936, or any subsequent date on which he avails himself of the leave.

Nadia.—No. 404.—8th July 1936.—Babu Soraj Kumar Sen, Sub-Registrar of Ranaghat, in the district of Nadia, is allowed leave on average pay for two months, under rule 81 (*b*) (*ii*) of the Fundamental Rules, in extension of the leave granted to him in this department notification No. 367, dated the 24th June 1936.

24-Parganas.—No. 405.—8th July 1936.—Babu Lakshmi Narayan Das, probationary Sub-Registrar attached to Sadar Registration office at Alipore, in the district of the 24-Parganas, is allowed leave, on medical certificate, for fourteen days, under rule 16 of the Bengal Services (Revision of Leave) Rules, 1934, in extension of the leave granted to him in this department notification No. 375, dated the 26th June 1936.

Bankura - Midnapore. — No. 410. — 13th July 1936. — Babu Rama Prasad Mukharji, Sub-Registrar attached to the Sadar Registration office at Bankura, is appointed to act as Sub-Registrar of Dantan, in the district of Midnapore, during the absence, on leave, of the permanent incumbent, or until further orders.

Rangpur-Nadia.—No. 411.—13th July 1936.—Maulvi M. A. Jabbar, Sub-Registrar of Sadullapur, in the district of Rangpur, is appointed to be Sub-Registrar of Sikarpur, in the district of Nadia.

Bogra-Rangpur.—No. 412.—13th July 1936.—Maulvi Najmul Huda, Sub-Registrar attached to the Sadar Registration office at Bogra, is appointed to act, until further orders, as Sub-Registrar of Sadullapur, in the district of Rangpur.

Rajshahi-Nadia.—No. 413.—13th July 1936.—Babu Manindra Kumar Maitra, Sub-Registrar attached to the Sadar Registration office at Rajshahi, at present officiating as Sub-Registrar of Sikarpur, in the district of Nadia, is posted temporarily to the headquarters station of the district of Nadia.

Rangpur.—No. 414.—13th July 1936.—Maulvi Mahiuddin Ahmad, Sub-Registrar of Gobindaganj, in the district of Rangpur, is appointed to be Sub-Registrar of Jaldhaka in the same district.

Rangpur.—No. 415.—13th July 1936.—Maulvi Basirullah Ahmad, Sub-Registrar of Jaldhaka, in the district of Rangpur, is appointed to be Sub-Registrar of Gobindaganj in the same district.

24-Parganas.—No. 416.—14th July 1936.—Babu Gopendra Nath Ray, Joint Sub-Registrar of Joynagar at Dakshin Barasat, in the district of the 24-Parganas, is appointed to be Sub-Registrar of Cossipore-Dum Dum in the same district.

Midnapore-24-Parganas.—No. 417.—14th July 1936.—Babu Nripendra Nath Basu, Sub-Registrar of Egra, in the district of Midnapore, is appointed to be Joint Sub-Registrar of Jaynagar at Dakshin Barasat, in the district of the 24-Parganas.

Faridpur-24-Parganas-Midnapore. — No. 418.—14th July 1936.—Babu Kalyan Kumar Das Gupta, Sub-Registrar attached to the Sadar Registration office at Faridpur and at present temporarily posted at Alipore, 24-Parganas, is appointed to act, until further orders, as Sub-Registrar of Egra, in the district of Midnapore.

Dacca.—No. 419.—14th July 1936.—Maulvi Naziruddin Muhammad (II), Joint Sub-Registrar of Sabhar at Kaliakair, in the district of Dacca, is allowed leave on average pay for three months, under rule 81(*b*) (*ii*) of the Fundamental Rules, with effect from the 8th June 1936.

Dacca.—No. 420.—14th July 1936.—Babu Rajendra Kumar Das, probationary Sub-Registrar attached to Dacca, is appointed to act as Joint Sub-Registrar of Sabhar at Kaliakair in the same district, with effect from the 8th June 1936, during the absence, on leave, of Maulvi Naziruddin Muhammad (II), Sub-Registrar, or until further orders.

Calcutta.—No. 421.—14th July 1936.—Maulvi Muhammad Mozammel Huq, probationary Sub-Registrar attached to Calcutta, acted as Joint Sub-Registrar of Calcutta from the 1st to the 30th June 1936 (inclusive), during the absence, on deputation, of Qura Hussain Qaisar Mirza, Joint Sub-Registrar of Calcutta, to act as Sub-Registrar of Calcutta.

Chittagong.—No. 422.—18th July 1936.—Babu Nirendra Nath Kanungo, Sub-Registrar of Banskhali, in the district of Chittagong, is allowed leave on average pay for one day on the 22nd June 1936, under rule 81(*b*)(*ii*) of the Fundamental Rules.

Midnapore.—No. 423.—18th July 1936.—Babu Bankim Chandra Mukharji, Sub-Registrar of Danton, in the district of Midnapore, is allowed leave on average pay for one month, under rule 81(*b*)(*ii*) of the Fundamental Rules, in extension of the leave granted to him in this department notification No. 246, dated 28th April 1936.

24-Parganas.—No. 424.—18th July 1936.—Babu Kshitish Chandra Gupta, Sub-Registrar of Baduria, in the district of the 24-Parganas, is allowed leave on average pay for one month, under rule 81(*b*)(*ii*) of the Fundamental Rules, in extension of the leave granted to him in this department notification No. 335, dated the 12th June 1936.

Khulna.—No. 425.—18th July 1936.—Babu Ramesh Chandra Mukherji, Sadar Joint Sub-Registrar of Khulna, is allowed leave on average pay for three weeks, under rule 81(*b*)(*ii*) of the Fundamental Rules, in extension of the leave granted to him in this department notification No. 354, dated the 19th June 1936.

Faridpur.—No. 426.—18th July 1936.—Maulvi Abdul Khaleq Khan, Joint Sub-Registrar of Muksudpur at Kasiani, in the district of Faridpur, is allowed leave for three months and eighteen days, viz., leave on average pay for two months and twenty-seven days, under rule 81(*b*)(*ii*) of the Fundamental Rules, in extension of the leave granted to him in this department notification No. 160, dated the 19th March 1936, and leave on half average pay, under rule 81(*d*) of the same Rules, for the remaining period.

Calcutta.—No. 427.—20th July 1936.—Babu Saurendra Nath Sen, Sub-Registrar attached to Calcutta Registration office, is allowed leave on average pay for one month, under rule 81(*b*)(*ii*) of the Fundamental Rules, in extension of the leave granted to him in this department notification No. 322, dated the 8th June 1936.

Noakhali. No. 428.—20th July 1936.—Babu Kshirode Mohan Bhowmik, Sub-Registrar attached to the Sadar Registration office at Noakhali, is allowed leave on average pay for one month and twelve days, under rule 81 (*b*)(*ii*) of the Fundamental Rules, with effect from the 19th June 1936.

Khulna.—No. 429.—20th July 1936.—Babu Hira Lal Das, Sub-Registrar of Kaliganj, in the district of Khulna, is allowed leave on average pay for one month, under rule 81(*b*)(*ii*) of the Fundamental Rules, in extension of the leave granted to him in this department notification No. 250, dated the 30th April 1936.

S. CHATTERJEA,
Inspector-General of Registration, Bengal.

COMMERCE DEPARTMENT.

Orders by the Registrar of Joint Stock Companies, Bengal.

Calcutta, the 13th July 1936.

In the matter of the Indian Companies Act, 1913 (VII of 1913), and in the matter of Pabna Motor Transport Co., Ltd.

Pursuant to the provisions of section 172(2) of the Indian Companies Act, 1913 (VII of 1913), notice is hereby given that an order was passed on the 27th May 1929 by the Hon'ble High Court of Judicature at Fort William in Bengal in its Ordinary Original Civil Jurisdiction under section 162 of the said Act for winding up Pabna Motor Transport Co., Ltd.

In the matter of the Indian Companies Act, 1913 (VII of 1913), and in the matter of Bogra United Bank, Ltd.

Pursuant to the provisions of section 172(2) of the Indian Companies Act, 1913 (VII of 1913), notice is hereby given that an order was passed on the 2nd December 1935 by the Hon'ble High Court of Judicature at Fort William in Bengal in its Ordinary Original Civil Jurisdiction under section 162 of the said Act for winding up Bogra United Bank, Ltd.

Calcutta, the 17th July 1936.

In the matter of the Indian Companies Act, 1913 (VII of 1913), and in the matter of G. M. Khan & Sons, Ltd.

Pursuant to the provisions of section 172(2) of the Indian Companies Act, 1913 (VII of 1913), notice is hereby given that an order was passed on the 27th April 1936 by the Hon'ble High Court of Judicature at Fort William in Bengal in its ordinary original civil jurisdiction under section 162 of the said Act for winding up G. M. Khan & Sons, Ltd.

In the matter of the Indian Companies Act, 1913 (VII of 1913), and in the matter of Bahadurabad Loan & Commerce, Ltd.

Pursuant to the provisions of section 172 (2) of the Indian Companies Act, 1913 (VII of 1913), notice is hereby given that an order was passed on the 20th January 1936 by the Hon'ble High Court of Judicature at Fort William in Bengal in its ordinary original civil jurisdiction under section 162 of the said Act for winding up Bahadurabad Loan & Commerce, Ltd.

In the matter of the Indian Companies Act, 1913 (VII of 1913), and in the matter of Indo Western Corporation, Ltd.

Pursuant to the provisions of section 172 (2) of the Indian Companies Act, 1913 (VII of 1913), notice is hereby given that an order was passed on the 17th February 1936 by the Hon'ble High Court of Judicature at Fort William in Bengal in its ordinary original civil jurisdiction under section 162 of the said Act for winding up Indo Western Corporation, Ltd.

N. K. MAJUMDER,
Registrar of Companies under Act VII of 1913.

PUBLIC WORKS DEPARTMENT.

Railway.

NOTIFICATIONS.

Minister-in-charge: The Hon'ble Nawab Sir Mohiuddin Faroqui, Kt., of Ratanpur.

No. 1R.—13th July 1936.—In exercise of the power conferred by section 6 of the Bengal Tramways Act, 1883 (Bengal Act III of 1883), the Government of Bengal (Ministry of Public Works), are pleased to direct that the following amendment be made in the Bengal District Road Tramways Company Order, 1895, published under notification No. 112, dated the 26th March 1895, at page 280 of Part I of the *Calcutta Gazette* of the 27th idem, as modified by notification No. 7R., dated the 24th January 1913, published at page 189 of Part I of the *Calcutta Gazette* of the 29th idem, and notification No. 4R., dated the 18th February 1922, published at page 371 of Part I of the *Calcutta Gazette* of the 22nd idem, namely :—

For the classification of and the maximum and minimum rates for goods specified in paragraph 35 of the said Order, *substitute* the following :—

Class.			Maximum.	Minimum.
1	..	..	·76	·100
2	..	..	·84	·100
2A	..	..	·92	·100

Class.	Maximum.	Minimum.
2B	1·00	·100
2C	1·08	·100
3	1·16	·166
4	1·24	·166
4A	1·34	·166
4B	1·44	·166
5	1·54	·166
6	1·66	·166
6A	1·78	·166
7	1·92	·166
8	2·08	·166
9	2·50	·166
10	3·74	·166

No. 2R.—13th July 1936.—In exercise of the power conferred by section 6 of the Bengal Tramways Act, 1883 (Bengal Act III of 1883), the Government of Bengal (Ministry of Public Works) are pleased to direct that the following amendment be made in the Howrah Amta Extension Order, 1901, published under notification No. 75R., dated the 7th April 1902, at page 491 of Part I of the *Calcutta Gazette* of the 9th idem, as modified by notification No. 5R., dated the 24th January 1913, published at page 188 of Part I of the *Calcutta Gazette* of the 29th idem, and notification No. 7R., dated the 23rd March 1922, published at page 605 of Part I of the *Calcutta Gazette* of the 29th idem, namely :—

For the classification of and the maximum and minimum rates for goods specified in paragraph 29 of the said Order, *substitute* the following :—

Class.	Maximum.	Minimum.
1	·76	·100
2	·84	·100
2A	·92	·100
2B	1·00	·100
2C	1·08	·100
3	1·16	·166
4	1·24	·166
4A	1·34	·166
4B	1·44	·166
5	1·54	·166
6	1·66	·166
6A	1·78	·166
7	1·92	·166
8	2·08	·166
9	2·50	·166
10	3·74	·166

No. 3R.—13th July 1936.—In exercise of the power conferred by section 6 of the Bengal Tramways Act, 1883 (Bengal Act III of 1883), the Government of Bengal (Ministry of Public Works) are pleased to direct that the following amendment be made in the Bengal District Road Tramways Company Order, 1895, published under notification No. 111,. dated the 26th March 1895, at page 267 of Part I of the *Calcutta Gazette* of the 27th idem, as modified by notification No. 6R., dated the 24th January 1913, published at page 188 of Part I of the *Calcutta Gazette* of the 29th idem, and notification No. 6R., dated the 23rd March 1922, published at page 604 of Part I of the *Calcutta Gazette* of the 29th idem, namely :—

For the classification of and the maximum and minimum rates for goods specified in paragraph 35 of the said Order, *substitute* the following :—

Class.	Maximum.	Minimum.
1	·76	·100
2	·84	·100
2A	·92	·100
2B	1·00	·100
2C	1·08	·100
3	1·16	·166
4	1·24	·166
4A	1·34	·166
4B	1·44	·166
5	1·54	·166
6	1·66	·166
6A	1·78	·166
7	1·92	·166
8	2·08	·166
9	2·50	·166
10	3·74	·166

No. 4R.—13th July 1936.—In exercise of the power conferred by section 6 of the Bengal Tramways Act, 1883 (Bengal Act III of 1883), the Government of Bengal (Ministry of Public Works) are pleased to direct that the following amendment be made in the Barasat-Bashirhat Patipukur Extension Order, published under notification No. 9R., dated the 19th February 1909, at page 261 of Part I of the *Calcutta Gazette* of the 24th idem, as modified by notification No. 16R., dated the 1st April 1913, published at page 521, Part I of the *Calcutta Gazette* of the 2nd idem, and notification No. 3R., dated the 27th January 1922, published at page 244 of Part I of the *Calcutta Gazette* of the 1st February 1922, namely :—

For the classification of and the maximum and minimum rates for goods specified in paragraph 30 of the said Order, *substitute* the following :—

Class.	Maximum.	Minimum.
1	·57	·100
2	·63	·100
2A	·69	·100
2B	·76	·100
2C	·81	·100
3	·87	·166
4	·92	·166
4A	1·00	·166
4B	1·08	·166
5	1·16	·166
6	1·24	·166
6A	1·34	·166
7	1·44	·166
8	1·54	·166
9	1·87	·166
10	2·80	·166

No. 5R.—13th July 1936.—In exercise of the power conferred by section 6 of the Bengal Tramways Act, 1883 (Bengal Act III of 1883), the Government of Bengal (Ministry of Public Works) are pleased to direct that the following amendment be made in the Barasat-Bashirhat Taki Extension Order, published under notification No. 22R., dated the 23rd November 1907, at page 2026 of Part I of the *Calcutta Gazette* of the 27th idem, as modified by notification No. 15R., dated the 1st April 1913, published at page 520, Part I of the *Calcutta Gazette* of the 2nd idem, and notification No. 2R., dated the 27th January 1922, published at pages 243 and 244 of the *Calcutta Gazette* of the 1st February 1922, namely :—

For the classification of and the maximum and minimum rates for goods specified in

paragraph 29 of the said Order, *substitute* the following :—

Class.	Maximum.	Minimum.
1	·57	·100
2	·63	·100
2A	·69	·100
2B	·76	·100
2C	·81	·100
3	·87	·166
4	·92	·166
4A	1·00	·166
4B	1·08	·166
5	1·16	·166
6	1·24	·166
6A	1·34	·166
7	1·44	·166
8	1·54	·166
9	1·87	·166
10	2·80	·166

No. 6R.—13th July 1936.—In exercise of the power conferred by section 6 of the Bengal Tramways Act, 1883 (Bengal Act III of 1883), the Government of Bengal (Ministry of Public Works) are pleased to direct that the following amendment be made in the Barasat-Bashirhat Tramways Company Order, published under notification No. 86R., dated the 15th May 1903, at page 611 of Part I of the *Calcutta Gazette* of the 20th idem, as modified by notification No. 14R., dated the 1st April 1913, published at page 520 of Part I of the *Calcutta Gazette* of the 2nd idem, and notification No. 1R., dated the 27th January 1922, published at page 273 of Part I of the *Calcutta Gazette* of the 1st February 1922, namely :—

For the classification of and the maximum and minimum rates for goods specified in paragraph 35 of the said Order, *substitute* the following :—

Class.	Maximum.	Minimum.
1	·57	·100
2	·63	·100
2A	·69	·100
2B	·76	·100
2C	·81	·100
3	·87	·166
4	·92	·166
4A	1·00	·166
4B	1·08	·166
5	1·16	·166
6	1·24	·166
6A	1·34	·166
7	1·44	·166
8	1·54	·166
9	1·87	·166
10	2·80	·166

H. S. E. STEVENS,
Secy. to the Govt. of Bengal.

IRRIGATION DEPARTMENT.

Establishment.

NOTIFICATION.

No. 9C.I.E.—18th July 1936.—Babu Prasad Das Sen Gupta, Assistant Engineer, is granted, under proviso to rule 81 (*b*) (*ii*) of the Fundamental Rules, leave on average pay, on medical certificate, for three months, with effect from the 28th June 1936.

T. A. CURRY,
Chief Engineer to the Government of Bengal.

DEPARTMENT OF AGRICULTURE AND INDUSTRIES.

Industries.

NOTIFICATIONS.

Minister-in-charge: The Hon'ble Nawab Sir Mohiuddin Faroqui, Kt., of Ratanpur.

No. 4494Ind.—16th July 1936.—Mr. C. C. Ghosh is appointed to be Deputy Director of Sericulture, Bengal, with effect from the 9th July 1936.

Dinajpur.—No. 4613Ind.—18th July 1936.—The orders issued with this department resolution No. 290T.A.I., dated the 19th September 1935, sanctioning a loan of Rs. 500 under the Bengal State Aid to Industries Act, 1931 (Bengal Act III of 1931), to Maulvis Serajuddin Ahmed and Safiuddin Ahmed of Dinajpur for the establishment of a soap factory are hereby cancelled.

Forests.

NOTIFICATIONS.

Darjeeling.—No. 852For.—15th July 1936.—Under the provisions of section 20 of the Indian Forest Act, 1927 (XVI of 1927), the Governor in Council declares that the whole of the freehold location known as "Paharpur" (Darjeeling lease No. 106 and general register No. B1-172) is reserved forest with effect from the 1st September 1936. The total area is 2 acres. It will form part of the Senchal reserved forest.

The land is situated in the district of Darjeeling, thana Jorbangala and is bounded on all sides by the Senchal reserved forest.

Darjeeling.—No. 853For. — 15th July 1936.—In exercise of the power conferred by section 27 of the Indian Forest Act, 1927 (XVI of 1927), the Governor in Council is pleased to declare that the area specified below which was declared to be reserved forest by notification, dated the 23rd January 1879, shall cease to be reserved forest with effect from the date of this notification :—

Specification of the land disforested.

Name of reserve or portion of reserve disforested—Senchal (part).
District—Darjeeling.
Thana—Jorbangala.
Area—2 acres.

Boundaries.

North and West—From a point on Lalkhuti Jhora 7 chains 0 link below where it meets the Old Military Road at a bearing of 215° 0′ for 1 chain 29 links ; then at a bearing of 232° 0′ for 1 chain 82 links ; then at a bearing of 238° 30′ for 3 chains 0 link to meet the boundary of the Senchal reserve forest.

West and South—The Rangmuk estate.
East—Lalkhuti Jhora.

The right of way over the road which passes through the land is retained by the Government.

Brief description of land—This forest land is on both sides of the road which passes from Sonada Railway Station to the Old Military Road and it adjoins forest land belonging to Burdwan Raj Estate. It is now handed over to that estate in exchange for Paharpur Location.

H. S. E. STEVENS,
Secy. to the Govt. of Bengal.

Orders by the Conservator of Forests, Bengal.

Sundarbans.—No. 8290For.—14th July 1936. — Babu Suresh Chandra Basu, Extra Assistant Conservator of Forests, attached to the Sundarbans Division, is transferred to the charge of the Khulna Range in the same Division, with effect from the 1st September 1936, with headquarters at Nalianala.

W. MEIKLEJOHN,
Conservator of Forests, Bengal.

Orders by the Registrar of Co-operative Societies, Bengal.

No. 86-L.—15th July 1936.—Whereas I am of opinion, as the result of an enquiry held into the constitution, working and financial condition of the Kuliana Samabaya Samity (registered No. 658 of 1910), in the subdivision Jhargram in the district of Midnapore, under sub-section (*1*) of section 35 of the Co-operative Societies Act, II of 1912, that the society ought to be dissolved.

Now, therefore, in exercise of the power conferred by sub-section (*1*) of section 39 of the same Act, I hereby cancel the registration of the said society.

And further, in exercise of the power conferred by sub-section (*1*) of section 42 of the same Act, I hereby appoint the Departmental Officer in charge of Co-operative Societies, Jhargram Circle, to be liquidator of the said society.

No. 87-L.—15th July 1936.—Whereas I am of opinion, as the result of an enquiry held into the constitution, working and financial condition of the Bara Ektal Joutha Bank (registered No. 320 of 1923), in the subdivision Jhargram in the district of Midnapore, under sub-section (*1*) of section 35 of the Co-operative Societies Act, II of 1912, that the society ought to be dissolved.

Now, therefore, in exercise of the power conferred by sub-section (*1*) of section 39 of the same Act, I hereby cancel the registration of the said society.

And further, in exercise of the power conferred by sub-section (*1*) of section 42 of the same Act, I hereby appoint the Departmental Officer in charge of Co-operative Societies, Jhargram Circle, to be liquidator of the said society.

A. M. ARSHADALI,
Registrar of Co-operative Societies, Bengal.

REVENUE DEPARTMENT.

Land Revenue.

NOTIFICATIONS.

No. 10089L.R.—14th July 1936.—In exercise of the power conferred by sub-section (*1*) of section 39 of the Bengal Agricultural Debtors Act, 1935 (Bengal Act VII of 1936), the Governor in Council is pleased to authorise Collectors in the undermentioned districts to transfer from one Debt Settlement Board to another, for disposal, applications made under section 8 of the said Act :—

Dacca.	Bogra.
Mymensingh.	Pabna.
Faridpur.	Malda.
Bakarganj.	Chittagong.
Rajshahi.	Tippera.
Dinajpur.	Noakhali.
Jalpaiguri.	Howrah.
Rangpur.	Midnapore.

No. 10090L.R.—14th July 1936.—In exercise of the power conferred by clause (*7*) of section 2 of the Bengal Agricultural Debtors Act, 1935 (Bengal Act VII of 1936), the Governor in Council is pleased to appoint the undermentioned officers, *ex-officio*, to exercise the powers of a Collector under sub-section (*1*) of section 39 of the said Act and under sub-rule (*2*) of rule 5, rule 6 and rule 49 of the Bengal Agricultural Debtors Rules, 1936, in regard to Debt Settlement Boards in their respective subdivisions :—

Bakarganj district.

Subdivisional Magistrate of Sadar subdivision.
Subdivisional Magistrate of Patuakhali subdivision.
Subdivisional Magistrate of Dakshin Shahbazpur (Bhola) subdivision.
Subdivisional Magistrate of Pirojpur subdivision.

Bogra district.

Subdivisional Magistrate of Sadar subdivision.

Chittagong district.

Subdivisional Magistrate of Sadar subdivision.
Subdivisional Magistrate of Cox's Bazar subdivision.

Dacca district.

Subdivisional Magistrate of Sadar subdivision.
Subdivisional Magistrate of Narayanganj subdivision.
Subdivisional Magistrate of Manikganj subdivision.
Subdivisional Magistrate of Munshiganj subdivision.

Dinajpur district.

Subdivisional Magistrate of Sadar subdivision.
Subdivisional Magistrate of Thakurgaon subdivision
Subdivisional Magistrate of Balurghat subdivision.

Faridpur district.

Subdivisional Magistrate of Sadar subdivision
Subdivisional Magistrate of Gopalganj subdivision.
Subdivisional Magistrate of Madaripur subdivision.
Subdivisional Magistrate of Gopalganj subdivision.

Howrah district.

Subdivisional Magistrate of Sadar subdivision.
Subdivisional Magistrate of Uluberia subdivision.

Jalpaiguri district.

Subdivisional Magistrate of Sadar subdivision.
Subdivisional Magistrate of Alipur subdivision.

Malda district.

Subdivisional Magistrate of Sadar subdivision.

Midnapore district.

Subdivisional Magistrate of Sadar subdivision.
Subdivisional Magistrate of Ghatal subdivision.
Subdivisional Magistrate of Tamluk subdivision.
Subdivisional Magistrate of Contai subdivision.
Subdivisional Magistrate of Jhargram subdivision.

Mymensingh district.

Subdivisional Magistrate of Sadar subdivision.
Subdivisional Magistrate of Tangail subdivision.
Subdivisional Magistrate of Kishoreganj subdivision.
Subdivisional Magistrate of Jamalpur subdivision.
Subdivisional Magistrate of Netrakona subdivision.

Noakhali district.

Subdivisional Magistrate of Sadar subdivision.
Subdivisional Magistrate of Feni subdivision.

Pabna district.

Subdivisional Magistrate of Sadar subdivision.
Subdivisional Magistrate of Sirajganj subdivision.

Rajshahi district.

Subdivisional Magistrate of Sadar subdivision.
Subdivisional Magistrate of Nator subdivision.
Subdivisional Magistrate of Naugaon subdivision.

Rangpur district.

Subdivisional Magistrate of Sadar subdivision.
Subdivisional Magistrate of Gaibandha subdivision.
Subdivisional Magistrate of Kurigram subdivision.
Subdivisional Magistrate of Nilphamari subdivision.

Tippera district.

Subdivisional Magistrate of Sadar subdivision.
Subdivisional Magistrate of Chandpur subdivision.
Subdivisional Magistrate of Brahmanbaria subdivision.

No. 10420L.R.—20th July 1936.—In exercise of the power conferred by section 55 of the Bengal Agricultural Debtors Act, 1935 (Bengal Act VII of 1936), the Governor in Council is pleased to make the following amendment to the Bengal Agricultural Debtors Rules, 1936, published under this department notification No. 9187 L.R., dated the 26th June 1936, namely :—

Amendment.

After rule 111 of the said rules the following rules shall be added, namely :—

Accounts.

112. (*1*) All money received by a Board shall either remain in the custody of the Chairman or be deposited in the nearest treasury or sub-treasury.

(*2*) If the nearest treasury or sub-treasury is within seven miles of the Chairman's residence, all sums in excess of one hundred rupees, and if the treasury or sub-treasury is at a greater distance, all sums in excess of one hundred and fifty rupees, shall be deposited in such treasury or sub-treasury.

113. Receipts and payments on account of diet money, travelling allowance and compensation of witnesses shall be classified as peremptory, and shall be recorded in a Peremptory Cash Register in Form XX on the day on which the money is received or paid, as the case may be. A balance shall be struck in that register at the close of each day, when the Chairman or presiding member shall examine the entries with the vouchers and receipts and initial the register in token of his having verified the entries and found them correct. The totals of receipts and payments shall be transferred to the Cash Book daily.

114. All other receipts and payments shall be recorded in the Cash Book, which shall be maintained in Form XXI. The Cash Book shall be closed and balanced each day, and the closing balance shall be verified daily with the cash in hand and a certificate of such verification shall be recorded daily in the Cash Book under the signature of the Chairman or presiding member.

115. A receipt signed by the Chairman or presiding member shall be granted in Form XXII for every sum received on behalf of the Board.

116. No payment shall be made on behalf of the Board except on a written order, which shall state the amount to be paid in words as well as in figures and shall be signed by the Chairman or presiding member.

117. When any payment, other than a peremptory payment, is made on behalf of the Board the Chairman or presiding member shall take a receipt from the payee which shall be kept with the payment order as a voucher, and shall endorse it with the voucher number assigned to it in the Cash Book.

When a peremptory payment is made the signature of the payee shall be taken in column 13 of the Peremptory Cash Register in token of receipt.

118. A record of court-fees, including court-fees on applications for copies but excluding court-fees paid for copies, shall be maintained in Form XXIII.

119. Any person requiring a copy of a record or part of a record shall make a written application to the Chairman. The Chairman or presiding member shall determine the amount of the prescribed fee payable, and shall cancel the court-fee stamps in the manner provided in rule 19 (*2*). On receipt of the fee, as so determined, the copies shall be prepared and shall be authenticated by the Chairman or presiding member by affixing his signature and the seal of the Board.

120. A register of applications for copies shall be kept in Form XXIV.

121. The bill of the copyist for his remuneration, which shall be at the rate of two annas of every three paid for the copies, shall be countersigned by the Chairman and forwarded to the Subdivisional Officer each month with the applications for copies to which the bill relates in original bearing the cancelled court-fee stamps. The Subdivisional Officer shall check the bill with the stamped applications, and, if he finds it correct, shall pass it for payment.

122. (*1*) The Circle Officer shall check the Cash Book and other account registers, and verify the cash in hand, when he inspects the work of the Board.

(*2*) The Chairman shall produce the vouchers and the cash in hand when so required by an inspecting officer.

123. A record of all postage stamps used shall be maintained in a manuscript register of letters and notices issued by post, which shall show (*1*) the date of issue, (*2*) the name of the person addressed, (*3*) the nature of the letters or notice and (*4*) the value of the postage stamps (*a*) purchased, (*b*) used on the letter or notice and (*c*) in hand.

Case Registers, Returns and Records.

124. A Case Register of applications under section 8, made to the Board or transferred to it from another Board, shall be maintained in Form XXV.

125. A Miscellaneous Register of applications, other than those under section 8, shall be maintained in the form described on page 15 of the Register and Return Manual, 1919, for Register of Cases No. 8.

126. A Disposal Register shall be maintained in Form XXVI by all Boards, and another in Form XXVII by Special Boards.

127. A Monthly Progress Register shall be maintained by all Boards in Form XXVIII and another by Special Boards in Form XXIX : and a return in the same form shall be submitted through the Subdivisional Officer to the Collector of the district on the 15th of each month.

128. A Process Register shall be maintained by all Boards in Form II of Schedule B of the Rules under the Bengal Village Self-Government Act, 1919, published under notification No. 5649J., dated the 13th August 1926.

129. Every Board shall keep an Inspection Book.

130. With the approval of the Collector a Board may use additional forms and registers.

131. A Board shall submit by the 1st May and the 1st November in each year through the Subdivisional Officer concerned to the Collector of the district, for submission through the Commissioner to the Local Government, a report reviewing (*a*) the progress made and the results achieved during the six months ending the 31st October and the 31st March, respectively, and (*b*) any difficulties experienced in working the Act, together with any suggestions for alterations in the Act or rules.

132. Case records of all proceedings disposed of during the month, excluding awards and those certificates which under rule 103 are to be forwarded to the Sub-Registrar, shall be transferred by a Board to the Subdivisional or Collectorate Record Room, as the case may be, before the close of the following month.

133. A Board shall transfer to the Collectorate Record Room every register kept by it within one month of the date of completion. The Inspection Book shall be kept with the Board permanently.

134. The rules relating to the preservation of registers, books and records in the Bengal Records Manual, 1928, shall apply *mutatis mutandis* to the registers, books and records of a Board.

135. The records of any case which has not yet been transferred to the Collectorate Record Room shall be open, with the permission of the Board, free of charge, to inspection by the parties during a sitting of the Board.

Form XX.

(*See* rule 113.)

Peremptory Cash Register of the ——————— *Debt Settlement Board.*

Dr.

Date.	From whom received.	Particulars and nature of receipt.	Witnesses' expenses.	Miscellaneous.	Total.	Remarks.
1	2	3	4	5	6	7
			Rs.	Rs.	Rs.	

Cr.

To whom paid.	Particulars and nature of receipt.	Witnesses' expenses.	Miscellaneous.	Total.	Signature of the payee.	Remarks.
8	9	10	11	12	13	14
		Rs.	Rs.	Rs.		

Instructions.

On each day when there is a receipt or payment-

(*1*) the words "opening balance" shall be written in column 3 and the amount of the last closing balance be entered in column 6,

(*2*) the grand total of the opening balance and of the day's receipts shall be struck and entered in column 6,

(*3*) the total of all payments shall be struck and entered in column 12,

(*4*) the total entered in column 12 shall be deducted from the grand total entered in column 6, and

(*5*) the balance thus obtained shall be entered in column 12 against the words "closing balance" which shall be written in column 9.

Form XXI.

(*See* rule 114.)

Cash Book.

Receipts.

Date.	From whom received.	Serial No. of counter-foil in the Receipt Book.	Opening balance.	Peremptory receipts.	Amounts received from treasury or other source for payment to staff, etc.			Miscellaneous receipts.	Total.	Remarks.
1	2	3	4	5	6	7	8	9	10	11
			Rs.	Rs.	Rs.	Rs.	Rs.	Rs.	Rs.	

Payments.

Date.	To whom paid.	No. of voucher.	Peremptory payments.	Amounts paid to staff, etc. (received from treasury or other source).	Miscellaneous payments.			Total.	Closing balance.	Remarks.
12	13	14	15	16	17	18	19	20	21	22
			Rs.	Rs.	Rs.	Rs.	Rs.	Rs.	Rs.	

Form XXII.

(*See* rule 115.)

Counterfoil Receipt Book.

.....Debt Settlement Board.

Receipt.

Serial No.....

Date.....

Received from.....

On account of.....

The sum of.....

Date of credit in Cash Book or Peremptory Cash Register.....

Signed

Chairman/Member

.....Debt Settlement Board.

Receipt.

Serial No.....

Date.....

Received from.....

On account of.....

The sum of.....

Signed

Chairman/Member

Form XXIII.

(*See* rule 118.)

Register of Fees.

A total should be struck each day.

Sums received on account of diet and travelling allowance or compensation of witnesses and fees paid for copies are to be entered in Form XX or XXI, as the case may be, and not in this register.

Serial No.	Date.	No. and year of proceedings.	Fees on miscellaneous petitions.	Fees on applications under section 8.	Fees on award other than in insolvency cases.	Fees on applications for review.	Fees on certificates under section 21.	Fees on awards in insolvency cases under section 22 (*1*) (*a*).	Total.	Remarks.
1	2	3	4	5	6	7	8	9	10	11

Form XXIV.

(*See* rule 120.)

Register of applications for copies.

A total of fees received should be struck each day.

.....Debt Settlement Board.

Serial No.	Name of applicant.	Date of application.	Description of document of which copy is required and number and year of case in which filed.	Number of English words.	Number of vernacular words.	Court-fees paid.	Date of payment.	Date on which copy was delivered.	Remarks.
1	2	3	4	5	6	7	8	9	10

Form XXV.

(*See* rule 124.)

Case Register of applications under section 8 of the Bengal Agricultural Debtors Act, 1935.

Serial No.	Name of the Debtor.	Name of the Creditor.	Total amount claimed by the creditors.	Date of receipt of application.	Date of the final order	Abstract of the final order.	Remarks.
1	2	3	4	5	6	7	8

Instructions.

Column (1).—The serial numbers should run for a year and the number of the month should be written after the yearly serial number thus—

1/1=Application 1 filed in January.
102/5=Application 102 filed in May, etc.

A new serial number should be given to any application transferred to the Board from another Board, and a note—

"Transferred from the..... Board (No..... of.....)" should be made in the remarks column.

Columns (2) and (3).—If there are several debtors or several creditors the names of only the first debtor or the first creditor, as the case may be, need be entered, with a note of the total number of debtors or creditors, e.g., "A. B. and 3 others".

Column (7).—The final order will be one of the following :—

(*a*) "Dismissed" wholly.
(*b*) "Dismissed" in part and "settled" in part.
(*c*) "Settled" wholly.
(*d*) "Transferred" to another Board.

The amount of the claim dismissed or settled should be entered in this column.

Form XXVI.

(*See* rule 126.)

Disposal Register, Part I.

(To be maintained by all Debt Settlement Boards.)

Date of disposal.	Serial No. in this register.	Reference to serial No. in register of applications.	Total of debts—		Applications wholly dismissed under section 17.	
			As claimed by creditors.	As determined under section 18.	Serial No.	Amount of claims.
1	2	3	4	5	6	7

Applications partly dismissed and partly settled under section 19.

Serial No.	Amount of claims dismissed.	Settled under section 19 (*1*).			
		Amount of claims settled.	Amount awarded under—		Total awarded.
			Clause (*a*).	Clause (*b*).	
8	9	10	11	12	13

Applications wholly settled under section 19 (*1*).					Applications transferred to other Boards.		Remarks.
Serial No.	Amount of claims.	Amount awarded under—		Total awarded.	Serial No.	Amount of claims.	
		Clause (*a*).	Clause (*b*).				
14	15	16	17	18	19	20	21

Instructions.

A new series of serial numbers should be started each month.

Totals should be struck at the end of each month.

Below the totals for the month, totals for disposals under the various heads for the year up to date should be entered.

Form XXVII.

(*See* rule 126.)

Disposal Register, Part II.

(To be maintained by Special Debt Settlement Boards only.)

Date of disposal.	Totals brought forward from Part I, columns 2 and 4.		Awards under section 22 (*1*).						Total.		Certificates under section 21.			Remarks.
			Clause (*a*).			Clause (*b*).								
	No.	Amount of claims.	Serial No.	Amount of claims.	Amount awarded.	Serial No.	Amount of claims.	Amount paid to creditors.	No.	Amount of claims.	No. of cases.	No. of certificates.	Amount of the debts certified.	
1	2	3	4	5	6	7	8	9	10	11	12	13	14	15

Instructions.

Columns 2 and 3 should be filled in only when totals are struck at the end of the month.

Columns 10 and 11 should be filled in only at the end of the month, when the total of columns 2, 4 and 7 will be entered in column 10 and that of columns 3, 5 and 8 in column 11.

Form XXVIII.

(*See* rule 127.)

Monthly Progress Register, Part I.

(To be maintained by all Debt Settlement Boards.)

Year..... .....Debt Settlement Board.

Month.	Applications to be dealt with.							
	Pending on 1st of month.		Made to the Board under section 8.		Transferred to the Board.		Total.	
	No.	Amount of claims.	No.	Amount of claims.	No.	Amount of claims.	No.	Amount of claims.
1	2	3	4	5	6	7	8	9

Disposals.

Dismissed wholly.		Dismissed in part and settled in part under section 19.			
				Settled under section 19(*1*).	
No.	Amount of claims.	No	Amount of the claims dismissed.	Amount of claims.	Amount awarded.
10	11	12	13	14	15

Disposals (continued).							Balance.		No. of sittings.	Remarks.
Settled wholly under section 19.			Transferred from the Board.		Total.					
No.	Amount of claims.	Amount awarded.	No.	Amount of claims.	No.	Amount of claims.	No.	Amount of claims.		
16	17	18	19	20	21	22	23	24	25	26

Form XXIX.

(*See* rule 127.)

Monthly Progress Register, Part II.

(To be maintained by Special Debt Settlement Boards only.)

Year..... .....Debt Settlement Board.

Disposals.

Month.	Totals brought forward from Part I, columns 21 and 22.		Awards under section 22 (*1*).					
			Clause (*a*).			Clause (*b*).		
	No.	Amount of claims.	No.	Amount of claims.	Amount awarded.	No.	Amount of claims.	Amount paid to creditors.
1	2	3	4	5	6	7	8	9

Disposals (continued).		Balance.		Certificates under section 21.			Remarks.
Total							
No.	Amount of claims.	No.	Amount of claims.	No. of cases.	No. of certificates.	Amount of the debts certified.	
10	11	12	13	14	15	16	17

Malda-Dacca.—No. 10359L.R.—18th July 1936.—Babu Upendra Kumar Mitra, Sub-Deputy Collector, Malda, is appointed to be Khas Mahal Officer, Dacca, with effect from the date on which he takes over charge of his duties in the latter district.

Howrah.—No. 10407L.R.—20th July 1936.—Babu Satya Charan Bhattacharjee, Deputy Collector and Assistant Settlement Officer, Howrah, is allowed "earned leave" for two months, under rule 10 of the Bengal Services (Revision of Leave) Rules, 1934, with effect from the 18th August 1936 or any subsequent date on which he is relieved of his settlement duties.

Land Acquisition.

NOTIFICATIONS.

Mymensingh.—No. 10257L.A.—15th July 1936.—Whereas it appears to the Governor in Council that additional land is likely to be required to be taken by Government at the expense of the district board, Mymensingh, for constructing approaches of the bridge over the Janakipur khal on the Chandrakona Nalitabari road in the village of Janakipur, jurisdiction list No. 171, thana Nalitabari (now Nakla), pargana Pukhuria, district Mymensingh, it is hereby notified that for the above purpose a piece of additional land comprising the remaining portion of cadastral plot No. 323 and portions of cadastral plot Nos. 322 and 496, and measuring, more or less, 1·062 acres, is likely to be required within the aforesaid village of Janakipur.

This notification is made, under the provisions of section 4 of Act I of 1894, to all whom it may concern.

A plan of the land may be inspected in the office of the Land Acquisition Officer, Jamalpur.

In exercise of the powers conferred by the aforesaid section, the Governor in Council is pleased to authorise the officers for the time being engaged in the undertaking, with their servants and workmen, to enter upon and survey the land and do all other acts required or permitted by that section.

Any person interested in the above land, who has any objection to the acquisition thereof, may, within thirty days after the date on which public notice of the substance of this notification is given in the locality, file an objection in writing before the Collector of Mymensingh.

24-Parganas.—No. 10263L.A.—15th July 1936.—Whereas it appears to the Governor in Council that land is likely to be required to be taken by Government at the public expense for a public purpose, viz., for a proposed siding to the Calcutta Electric Supply Corporation, Ltd., for new generating station in the village of Mulajore, jurisdiction list No. 18, thana Jagaddal, pargana Havelisahar, district 24-Parganas, it is hereby notified that for the above purpose a piece of land comprising portions of cadastral plot Nos. 1106, 90, 91, 92, 1104, 88, 86, 85, 84, 83, 82, 81 and 73 and entire plot No. 89, and measuring, more or less, 0·7831 of an acre, is likely to be required within the aforesaid village of Mulajore.

This notification is made, under the provisions of section 4 of Act I of 1894, to all whom it may concern.

A plan of the land may be inspected in the office of the Executive Engineer, Calcutta District, Eastern Bengal Railway.

In exercise of the powers conferred by the aforesaid section, the Governor in Council is pleased to authorise the officers for the time being engaged in the undertaking, with their servants and workmen, to enter upon and survey the land and do all other acts required or permitted by that section.

Any person interested in the above land, who has any objection to the acquisition thereof, may, within thirty days after the date on which public notice of the substance of this notification is given in the locality, file an objection in writing before the Collector of the 24-Parganas.

Bogra.—No. 10266L.A.—15th July 1936.—Whereas it appears to the Governor in Council that land is likely to be required to be taken by Government at the expense of the Sonatala union board for a public purpose, viz., for Sonatola Union Board road in the village of Aguniartair, jurisdiction list No. 17, thana Sariakandi, pargana Poladashi, zilla Bogra, it is hereby notified that for the above purpose a piece of land comprising part of cadastral plot No. 2121, and measuring, more or less, 0·02 of an acre, is likely to be required within the aforesaid village of Aguniartair.

This notification is made, under the provisions of section 4 of Act I of 1894, to all whom it may concern.

A plan of the land may be inspected in the office of the Collector of Bogra.

In exercise of the powers conferred by the aforesaid section, the Governor in Council is pleased to authorise the officers for the time being engaged in the undertaking, with their servants and workmen, to enter upon and survey the land and do all other acts required or permitted by that section.

Any person interested in the above land, who has any objection to the acquisition thereof, may, within thirty days after the date on which public notice of the substance of this notification is given in the locality, file an objection in writing before the Collector of Bogra.

Tippera.—No. 10269L.A.—15th July 1936.—Whereas it appears to the Governor in Council that land is likely to be required to be taken by Government at the expense of the Comilla Municipality for a public purpose, viz., for widening out the Kalitala road in the village of Kandirpar, jurisdiction list No. 285, thana Comilla (Kotwali), pargana Mekerkul, district Tippera,

it is hereby notified that for the above purpose three pieces of land altogether measuring, more or less, 0·055 of an acre, bounded on the—

Block A.

North—By remaining portion of T. S. plot No. 360,

South and East—By portion of T. S. plot No. 411,

West—By portion of T. S. plot No. 554,

Block B.

North—By portion of T. S. plot No. 411,

East—By remaining portion of T. S. plot No. 412,

South—By remaining portion of T. S. plot Nos. 491 and 412,

West—By portion of T. S. plot No. 354,

Block C.

North—By portion of T. S. plot No. 411,

East and South—By remaining portion of T. S. plot No. 414,

West—By portion of T. S. plot No. 413,

are likely to be required within the aforesaid village of Kandirpar.

This notification is made, under the provisions of section 4 of Act I of 1894, to all whom it may concern.

A plan of the land may be inspected in the office of the Sadar Subdivisional Officer (South), Comilla.

In exercise of the powers conferred by the aforesaid section, the Governor in Council is pleased to authorise the officers for the time being engaged in the undertaking, with their servants and workmen, to enter upon and survey the land and do all other acts required or permitted by that section.

Any person interested in the above land, who has any objection to the acquisition thereof, may, within thirty days after the date on which public notice of the substance of this notification is given in the locality, file an objection in writing before the Collector of Tippera.

Calcutta-24-Parganas.—No. 10335L.A.—17th July 1936.—Babu Jogesh Chandra Mitra, Deputy Magistrate and Deputy Collector, employed as Special Land Acquisition Officer at Alipore, district 24-Parganas, is appointed to be the Second Land Acquisition Collector, Calcutta, with effect from the 1st August 1936 or any subsequent date on which he joins the appointment and is vested with the powers of a Collector under the Land Acquisition Act, I of 1894, in the town of Calcutta and in the district of 24-Parganas.

Khulna.—No. 10414L.A.—20th July 1936.—The Governor in Council is pleased to cancel notification No. 2386L.A., dated the 11th February 1935, under section 4 of the Land Acquisition Act, I of 1894, published at page 344, Part I, of the *Calcutta Gazette* of the 14th idem, in respect of the proposed acquisition of 0·06 of an acre of land required by the Phultala union board, district Khulna, for extension of Uttardihi Jola Jugipara road in the village of Uttardihi, jurisdiction list No. 1, thana Phultala, pargana Changutia, district Khulna.

Chittagong.—No. 10417L.A.—20th July 1936.—The Governor in Council is pleased to cancel the notification No. 1782L.A., dated the 7th February 1936, under section 4 of the Land Acquisition Act, I of 1894, published at pages 387-88, Part I of the *Calcutta Gazette* of the 13th idem, in respect of the proposed acquisition of 67·94 acres of land required by the Chandranagar Tea Company, Ltd., for the construction of roads, company's factory, etc., in the villages of Purbakaiyapukhia, Paschim Kaiyapukhia, etc., police-station Fatikcheri, district Chittagong.

ERRATUM.

Tippera.—No. 9961L.A.—10th July 1936.—In line 13 of the notification No. 6941L.A., dated the 28th June 1934, under section 4 of the Land Acquisition Act, I of 1894, published at page 961, Part I of the *Calcutta Gazette* of the 5th July 1934 and in line 13 of the declaration No. 14198L. A., dated the 23rd August 1935, under section 6 of the Act, published at page 1641, Part I of the the *Calcutta Gazette* of the 29th idem, in respect of the acquisition of land required by the Chandpur Municipality for the burial ground for the south section of the municipality in the village of Chandpur Municipality, pargana Purchandi, district Tippera, *for* "795" *read* "796".

DECLARATIONS.

Burdwan.—No. 10248L.A.—15th July 1936.—Whereas it appears to the Governor in Council that land is required to be taken by Government at the public expense for a public purpose, viz., for road approach at mile 2, chainage 24 and 93 feet of distributary No. 11, Branch Canal, Damodar Canal Project, in the village of Chandipur, jurisdiction list No. 41, thana Bhatar, pargana Mazafarsahi, district Burdwan, it is hereby declared that for the above purpose two pieces of land comprising parts of cadastral survey plot Nos. 2014, 2015, 2029-2031, 2039, 2059, 2061, 2062, 2129, 2130, 2132-2134, 2137, 2139-2142, 2162, 2170-2172, 2174-2179, 2187 and 2209, and together measuring, more or less, 2·56 acres, are required within the aforesaid village of Chandipur.

This declaration is made, under the provisions of section 6 of Act I of 1894, to all whom it may concern.

A plan of the land may be inspected in the office of the Special Land Acquisition Officer, Burdwan, as well as in that of the Executive Engineer, Damodar Canal Division, Burdwan.

Burdwan.—No. 10251L.A.—15th July 1936.—Whereas it appears to the Governor in Council that land is required to be taken by Government at the public expense for a public purpose, viz., for road approach of head sluice at mile 19, chainage 43 and 80 feet of distributary No. 11, Branch Canal, Damodar Canal Project, in the village of Eruar, jurisdiction list No. 38, thana Bhatar, pargana Mazafarsahi, district Burdwan, it is hereby declared that for the above purpose three pieces of land comprising parts of cadastral survey plots Nos. 29, 70, 71, 73, 74 and 78, and altogether measuring, more or less, 0·19 of an acre, are required within the aforesaid village of Eruar.

This declaration is made, under the provisions of section 6 of Act I of 1894, to all whom it may concern.

A plan of the land may be inspected in the office of the Special Land Acquisition Officer, Burdwan, as well as in that of the Executive Engineer, Damodar Canal Division, Burdwan.

Burdwan.—No. 10254L.A.—15th July 1936.—Whereas it appears to the Governor in Council that land is required to be taken by Government at the public expense for a public purpose, viz., for an assisted siding of the East Indian Railway to serve Real Jambad Colliery in the village of Bahula, jurisdiction list No. 30, thana Ondal and in the village of Kenda, jurisdiction list No. 73, thana Jamuria, pargana Shergarh, district Burdwan, it is hereby declared that for the above purpose a piece of land comprising parts of cadastral survey plots Nos. 1043 and 1108 in mauza Bahula and part of cadastral survey plot No. 2744 in mauza Kenda, and measuring, more or less, 0·40 of an acre, is required within the aforesaid villages of Bahula and Kenda.

This declaration is made, under the provisions of section 6 of Act I of 1894, to all whom it may concern.

A plan of the land may be inspected in the office of the Special Land Acquisition Officer, Burdwan, as well as in that of the Divisional Superintendent, East Indian Railway, Asansol.

24-Parganas.—No. 10260L.A.—15th July 1936.—Whereas it appears to the Governor in Council that additional land is required to be taken by Government at the expense of the district board, 24-Parganas, for a public purpose, viz., for a middle English school at Kowtala, in the village of Khari, jurisdiction list No. 49, thana Mathurapur, pargana Khari, district 24-Parganas, it is hereby declared that for the above purpose a piece of land comprising portions of cadastral survey plots Nos. 3511, 3512 and 3513, and measuring, more or less, 0·3874 of an acre, is required within the aforesaid village of Khari.

This declaration is made, under the provisions of section 6 of Act I of 1894, to all whom it may concern.

A plan of the land may be inspected in the office of the Land Acquisition Officer, 24-Parganas.

Noakhali.—No. 10272L.A.—15th July 1936.—Whereas it appears to the Governor in Council that land is required to be taken by Government at the public expense for a public purpose, viz., for the extension of the playing field of the Begamganj High English School, in the village of Choumuhani, pargana Amrabad, zilla Noakhali, it is hereby declared that for the above purpose a piece of land measuring, more or less, 1·06 acres comprising cadastral survey plots Nos. 10 and 11, is required within the aforesaid village of Choumuhani.

This declaration is made, under the provisions of section 6 of Act I of 1894, to all whom it may concern.

A plan of the land may be inspected in the office of the Collector of Noakhali.

Chittagong. — No. 10304L.A. — 16th July 1936.—Whereas it appears to the Governor in Council that land is required to be taken by Government at the public expense for a public purpose, viz., for extension of the compound of the Custom House, Chittagong, in the village of Madarbari, police-station Double Moorings, district Chittagong, it is hereby declared that for the above purpose a piece of land comprising the part of revisional survey plot No. 1948 and measuring, more or less, 0·0232 of an acre, is required within the aforesaid village of Madarbari.

This declaration is made, under the provisions of section 6 of Act I of 1894, to all whom it may concern.

A plan of the land may be inspected in the office of the Collector of Chittagong.

Burdwan.—No. 10411L.A.—20th July 1936.—Whereas it appears to the Governor in Council that land is required to be taken by Government at the expense of the district board, Burdwan, for a public purpose, viz., for the track road to Sadarghat ferry in the village of Mirchhoba, jurisdiction list No. 33, thana Burdwan, pargana Burdwan, district Burdwan, it is hereby declared that for the above purpose a piece of land comprising parts of cadastral survey plot Nos. 180 and 188, and measuring, more or less, 0·27 of an acre, is required within the aforesaid village of Mirchhoba.

This declaration is made, under the provisions of section 6 of Act I of 1894, to all whom it may concern.

A plan of the land may be inspected in the office of the Special Land Acquisition Officer, Burdwan, as well as in that of the Chairman, district board, Burdwan.

Excise.

NOTIFICATIONS.

Minister-in-charge: The Hon'ble Sir Bijoy Prasad Singh Roy, Kt.

No. 692Ex.—13th July 1936.—Babu Gunendra Nath Ray Choudhuri, Superintendent of Excise and Salt, is allowed leave on average pay, under rule 81 (*b*) (*ii*) of the Fundamental Rules, for two months, in extension of the leave granted to him in this department notification No. 570Ex., dated the 23rd May 1936.

No. 695Ex.—13th July 1936.—Babu Atul Chandra Mazumdar, Sub-Inspector of Excise and Salt, is appointed to act as Inspector of Excise and Salt, with effect from the date he assumes charge of the office, *vice* Maulvi S. M. Tafazzal Hussain, granted leave, or until further orders.

This cancels this department notification No. 56T.Ex., dated the 8th May 1936.

J. B. KINDERSLEY,

Secy. to the Govt. of Bengal (offg.).

BOARD OF REVENUE, BENGAL.

NOTIFICATIONS.

24-Parganas.—No. 9623C.P.—13th July 1936.—In exercise of the powers conferred by clause (2) of section 8 of the Bengal Land Revenue (Assistant Collectors) Regulation, 1821 (IV of 1821), the Board of Revenue authorises Babu Jajneswar Mazumdar, Settlement Kanungo, who has been placed on duty in connection with the maintenance, for the purposes of section 158A of the Bengal Tenancy Act, 1885, of the record-of-rights of the estate of Babu Kali Charan Nag Choudhuri of Arbelia in the district of the 24-Parganas, to exercise and perform within the local limits of the said estate any of the powers and duties vested in the Collectors of Land Revenue under any enactment in force therein for the purpose of the said work of maintenance of the record-of-rights.

Dacca. — No. 9882C.P. — 17th July 1936.—In exercise of powers conferred by clause (2) of section 8 of the Bengal Land Revenue (Assistant Collectors) Regulation, 1821 (IV of 1821), the Board of Revenue authorises Babu Prafulla Chandra Moulik, Settlement Kanungo, who has been placed on duty in connection with the maintenance, for the purposes of section 158A of the Bengal Tenancy Act, 1885, of the record-of-rights of the estate of Lala Brojendra Kumar Bose in the district of Dacca, to exercise and perform within the local limits of the said estate any of the powers and duties vested in the Collectors of Land Revenue under any enactment in force therein for the purpose of the said work of maintenance of the record-of-rights.

S. BANERJEE,

Secy. to the Board of Revenue, Bengal.

TREASURY NOTICE.

Faridpur, the 16th July 1936.

Uncovenanted Deputy Collector Babu Birendra Mohan Ghosh has been placed in executive charge of the Faridpur Treasury from the forenoon of the 16th July 1936, *vice* Babu Girija Bhusan Ghoshal, Deputy Collector, transferred to Chittagong, and is authorised to draw bills on other treasuries.

K. A. L. HILL, *Collector.*

SHERIFF'S OFFICE.

The 9th July 1936.

Notice is hereby given that the Fourth Criminal Sessions of the year 1936 of the High Court of Judicature at Fort William in Bengal for the town of Calcutta and Factory of Fort William and the places subordinate thereto will be held at the Court House in the town of Calcutta, on Monday, the 3rd day of August next, at 11 o'clock in the forenoon, and thenceforward from day to day until the said sessions be over. And it is hereby proclaimed that all persons who are to prosecute any of the prisoners to be brought up for trial at the said sessions be present then and there to prosecute.

C. G. ARTHUR, *Sheriff.*

শরিফ আফিস, সন ১৯৩৬ সাল, তারিখ ৯ই জুলাই।

সকলকে সমাচার দেওয়া যাইতেছে যে, সুবে বাঙ্গালার ফোর্ট উইলিয়ম দুর্গের অধীন সহর কলিকাতার ও অন্যান্য স্থানের ফৌজদারী বিচার নিষ্পত্তি জন্য আগামী সন ১৯৩৬ সালের ৩রা আগষ্ট সোমবার বেলা ১১ ঘটিকার সময় এবং যে পর্য্যন্ত সেশিয়ানের কার্য্য সমাধা না হয়, প্রতিদিন উক্ত সময়ে কলিকাতার হাইকোর্টের আপন আদালত ঘরে সন ১৯৩৬ সালের চতুর্থ ক্রিমিনেল সেশিয়ান বসিবেক এবং এতদ্বারা প্রচার করা যাইতেছে যে, যে সকল ব্যক্তি কোন কয়েদীর বিরুদ্ধে ফৌজদারী মিছিল করিবেক, তাহারা উক্ত স্থানে উক্ত সময়ে হাজির থাকিয়া মোকদ্দমা করে। ইতি।

সি, জি, আর্থার,

শরিফ।

HIGH COURT NOTICES.

Civil.

The 16th July 1936.

No. 15745A.—The munsifs named in the following schedule are vested with the powers of a Judge of a Court of Small Causes for the trial of suits cognizable by such a Court up to the value of Rs. 300 within the local limits noted against each :—

Schedule.

1. Babu Narayan Chandra Basu, under orders of transfer to Serampore (Hooghly)—Serampore munsifi.
2. Babu Pratap Chandra Sen Gupta, under orders of transfer to Chuadanga (Nadia)—Chuadanga munsifi.

The 17th July 1936.

No. 15897A.—Mr. F. A. Karim, I.C.S., Joint Magistrate and Deputy Collector, Chittagong, exercising the powers of a Subordinate Judge, is vested with the powers of a Judge of a Court of Small Causes for the trial of suits cognizable by such a Court up to the value of Rs. 500 within the local limits of the Sadar munsifi of Chittagong.

By order of the High Court,

E. S. SIMPSON, *Registrar.*

Original Side.

Calcutta, the 16th July 1936.

The Hon'ble the Chief Justice has been pleased to grant Babu Subodh Chandra Sen Gupta, Assistant Registrar, High Court, Original Side, leave for six months preparatory to retirement from 6th July 1936, viz., leave on average pay for four months and on half average pay for the remaining period, under the proviso to Fundamental Rule 81 (*b*) (*ii*) and Fundamental Rule 81 (*d*), respectively, read with Fundamental Rule 86, and has made the following acting arrangement from 16th July 1936 until further order :—

Babu Bhupendra Nath Mitra, Superintendent, Crown Office, Rs. 150—5—200, *vice* Babu Subodh Chandra Sen Gupta, Assistant Registrar, Rs. 200—20—300.

By order,

A. L. COLLET, *Registrar.*

ORDERS BY COMMISSIONERS OF DIVISIONS.

Burdwan Division—Chinsura.

Burdwan, the 6th July 1936.

It is hereby notified for general information that, under section 13 of the Bengal Village Self-Government Act, 1919 (Bengal Act V of 1919), read with rule 35 of the rules for the election and appointment of members of union boards, etc., Babu Atul Chandra Banerjee has been duly elected to be a member of Ward No. II of the Kulti union board in police-station Kulti in the Asansol subdivision of Burdwan, *vice* Babu Sarbeswar Roy, deceased.

It is hereby notified for general information that, under section 13 of the Bengal Village Self-Government Act, 1919 (Bengal Act V of 1919), read with rule 35 of the rules for the election and appointment of members of union boards, etc., Babu Bibhuti Bhusan Mondal has been duly elected to be a member of Ward No. III of the Kulti union board in police-station Kulti in the Asansol subdivision of Burdwan, *vice* Babu Mahadeb Dewashi, deceased.

R. JOHNSTON, *District Magistrate.*

Birbhum, the 10th July 1936.

No. 49L.S.-G. — It is hereby notified for general information that, under section 13 of the Bengal Village Self-Government Act, 1919 (Bengal Act V of 1919), read with rule 36 of the rules for the election and appointment of members of union boards, etc., Babu Rakhal Chandra Das has been appointed by me to be a member of the Nanur union board in Nanur police-station in the Sadar subdivision of the district of Birbhum, *vice* Babu Anadi Kinkar Roy, removed.

H. BOSE, *District Magistrate.*

Chittagong Division—Chittagong.

No. 3536G.—17th July 1936 – It is hereby notified for general information that at a by-election held on the 6th July 1936, in the Barabazar Ward of the Noakhali Municipality, Maulvi Mohammad Yusaf was duly elected to be a Commissioner for that ward of the municipality, *vice* Khan Sahib Maulvi Safar Ali, deceased.

J. D. V. HODGE, *Commissioner (offg.).*

Chittagong, the 13th July 1936.

No. 8351.—It is hereby notified for general information that, under section 13 of the Bengal Village Self-Government Act, 1919 (Bengal Act V of 1919), read with rule 35 of the rules for the election and appointment of members of union boards, the following gentlemen have been duly elected to be members of the undermentioned union boards within the police-station Satkania in the "B" subdivision of the Chittagong district :—

Satkania police-station.

Kanchana union board No. III.

Munshi Abdul Salam, *vice* Munshi Abdul Jalil, deceased.

Lohagara union board No. XVII.

Munshi Azizur Rahaman, *vice* Maulvi Obedur Rahaman, deceased.

G. L. HYDE, *Addl. District Magistrate.*

Comilla, the 14th July 1936.

No. 6653M.—It is hereby notified for general information that, under section 13 of the Bengal Village Self-Government Act, 1919, read with section 6 (2) and rule 35 of the rules for the election and appointment of members of union boards, Babu Nagendra Chandra Ghosh has been duly elected as a member of the Binauti union board No. VII of the Kasba police-station in the Brahmanbaria subdivision of the district of Tippera, *vice* Babu Barada Charan Chakrabarty, removed by the district board.

J. P. RAY, *Addl. District Magistrate.*

Orders by the Deputy Inspector-General of Police, Bakarganj Range.

Barisal. No. 3441.—16th July 1936.—Babu Prakash Chandra Ray, Inspector, Tippera, is granted leave for 2 months, viz., 15 days' privilege leave and 1 month and 15 days' furlough on average salary, on medical certificate, under Article 301 (*a*) of the Civil Service Regulations, with effect from 20th June 1936.

Sub-Inspector Haji Abdul Majid of Tippera is appointed to act as Inspector in the above vacancy.

G. H. MANNOOCH,
Deputy Inspector-General of Police (offg.).

Dacca Division—Dacca.

Orders by the Deputy Inspector-General of Police, Dacca Range.

Dacca.—No. 2887.—16th July 1936.—Babu Jitendra Lal Ray Chaudhuri, officiating Court Inspector, Dacca, will continue to act as such with effect from 1st July 1936 until further orders, *vice* Babu Nripendra Nath Maitra, Inspector, retired

Maulvi Zillur Rahim, officiating Inspector, Dacca, will continue to act as such with effect from 1st July 1936 until further orders, *vice* Babu Sharat Chandra Basu, Inspector, retired.

A. D. GORDON,
Deputy Inspector-General of Police.

Presidency Division—Calcutta.

No. 344J.G.—13th July 1936.—It is hereby notified for general information that in exercise of the powers conferred on me by rule 63(*2*) of the Bengal Jail Code, 1919, Volume I, as revised, I appoint Mr. H. Elton of the Burma Shell Oil Storage and Distributing Company of India, Ltd., to be a non-official visitor of the Alipore Central Jail in the district of the 24-Parganas for a period of two years with effect from the date of this notification, in place of Mr. F. C. Guthrie, resigned.

A. J. DASH, *Commissioner.*

Krishnagar, the 11th July 1936.

No. 2161L.S.-G.—It is hereby notified for general information that—(*a*) under sub-section (*2*) of section 6 of the Bengal Village Self-Government Act, 1919 (Bengal Act V of 1919), the gentlemen as per list "A" have been duly elected to be members of the union boards mentioned therein, (*b*) under sub-section (*4*) of section 6 of the said Act the gentlemen as per list "B" are appointed by me to be members of the respective union boards noted therein and (*c*) under sub-section (*3*) of section 6 of the said Act the gentlemen as per list "C" are appointed by me to be members of the union boards as noted in each case :—

List "A."

Chuadanga subdivision, Nadia district.

Chuadanga police-station.

Maminpur union board.

Ward No. I.

Munshi Inraj Molla.
Munshi Mahatabuddin Ahamad.

Ward No. II.

Babu Mati Lall Brahmachari.
Babu Gaurhari Moitra.

Ward No. III.

Babu Laksmikanta Dey.
Munshi Jan Ali Khondker.

Titudaha union board.

Ward No. I.

Babu Durlav Chandra Mondal.
Babu Shib Chandra Biswas.

Ward No. II.

Munshi Jahiraddin Mondal.

Ward No. III.

Babu Kanai Biswas.

Kutubpur union board.

Ward No. I.

Munshi Easin Molla.
Munshi Khorshed Ali Biswas.

Ward No. III.

Babu Mohinimohon Bandopadhyay.
Babu Behari Lall Saha.

Alukdia union board.

Ward No. I.

Munshi Samsuddin Biswas.
Munshi Mahammad Eaqub Hossain.

Ward No. II.

Babu Indu Bhusan Chakravarty.
Babu Kanai Lall Biswas.

Ward No. III.

Munshi Bisarath Ali Biswas.
Munshi Elahi Baksh Malita.

Sankarchandra union board.

Ward No. I

Munshi Fakir Mahammad Biswas.
Munshi Romjan Ali Biswas.

Ward No. III.

Babu Sambhunath Mukherjee.
Munshi Fazur Ali Mondal.

Padmabil union board.

Ward No. I.

Babu Amiyabhusan Chaudhury.
Munshi Samsuddin Joarder.

Ward No. III.

Munshi Bhajan Biswas.
Munshi Mahammad Ali Shah.

Begampur union board.

Ward No. I.

Babu Amulya Kumar Banerjee.
Babu Bisweswar Ganguli.

Ward No. II.

Babu Bhiksharam Pramanik.
Munshi Banshi Mondal.

Ward No. III.

Babu Subal Chandra Chaubey.
Babu Nityananda Biswas.

Damurhuda police-station.

Kurulgachi union board.

Ward No. I.

Babu Birnarayan Sinha Roy.
Babu Nishithabhusan Sinha Roy.

Ward No. II.

Babu Apurba Kumar Ganguli.
Babu Sukumar Roy.
Babu Nagendragopal Ganguli.
Babu Jaminimohon Mazumder.

Damurhuda union board.

Ward No. I.

Babu Bholanath Santara.

Ward No. II.

Munshi Bhaduruddin Khan.
Babu Pramathabhusan Biswas.

Ward No. III.

Babu Srihari Biswas.
Munshi Jonabali Biswas.

Natipota union board.

Ward No. I.

Babu Soukhindramohan Sarkar.
Babu Sourendramohan Sarkar.

Ward No. II.

Babu Sachindranath Biswas.
Babu Haripada Biswas.

Ward No. III.

Babu Baisnab Charan Biswas.

Pirpurkulla union board.

Ward No. I.

Babu Shishir Kumar Sinha.
Munshi Piziruddin Biswas.
Munshi Habiluddin Biswas.

Ward No. II.

Munshi Afzel Hosain Mallik.
Munshi Fakir Muhammad Biswas.

Natudah union board.

Ward No. II.

Munshi Muhammad Fazlul Huque.

Ward No. III.

Babu Niranjan Sinha.
Munshi Muhammad Ebrahim Khan.

List "B."

Chuadanga subdivision, Nadia district.

Chuadanga police-station.

Titudaha union board.

Ward No. II.

Munshi Khelafat Mandal.

Ward No. III.

Babu Sarat Chandra Roy.

Kutubpur union board.

Ward No. II.

Munshi Sukur Muhammad Biswas.
Munshi Torapali Biswas.

Sankarchandra union board.

Ward No. II.

Babu Gangapada Mitra.
Munshi Badsa Ali Biswas.

Padmabil union board.

Ward No. II.

Munshi Fakir Muhammad Biswas.
Munshi Golam Abbas Joarder.

Damurhuda police-station.

Damurhuda union board.

Ward No. I.

Babu Bamandas Kundu.

Natipota union board.

Ward No. III.

Munshi Mafizuddin Ahmed.

Pirpurkulla union board.

Ward No. II.

Munshi Mafizuddin Biswas.

Natudah union board.

Ward No. I.

Babu Abinash Chandra Das.
Munshi Jahiruddin Mallik.

Ward No. II.

Babu Nani Gopal Sinha.

List "C."

Chuadanga subdivision, Nadia district.

Chuadanga police-station.

Maminpur union board.

Babu Atal Behari Pal.
Munshi Kayemali Biswas.
Khan Sahib Abdul Jubbar Biswas.

Titudaha union board.

Babu Tinkari Biswas.
Babu Haridas Bhattacherjya.
Babu Dwijapada Garai.

Kutubpur union board.

Babu Hiralal Biswas.
Babu Kalipada Sarkar.
Babu Satish Chandra Biswas.

Alukdia union board.

Babu Amarendranath Sanyal.
Munshi Aizuddin Mandal.
Babu Rakhal Chandra Biswas.

Sankarchandra union board.

Babu Panchanan Ghose.
Maulvi Mahammad Ebrahim Biswas.
Babu Nanigopal Biswas.

Padmabil union board.

Babu Balaram Biswas.
Babu Hrishikesh Choudhury.
Babu Bholanath Biswas.

Begampur union board.

Babu Sayaram Roy.
Munshi Mozaharali Mandal.
Babu Aswini Kumar Roy.

Damurhuda police-station.

Kurulgachi union board.

Munshi Saheruddin Ahmed.
Babu Basanta Kumar Roy.
Mir Abdur Rahim.

Damurhuda union board.

Babu Gopiballav Mitra.
Babu Niskalanka Sinha Roy.
Munshi Rabbani Mondal.

Natipota union board.

Babu Mohimohon Sarkar.
Munshi Muhammad Mohsin.
Munshi Rahim Bux.

Pirpurkulla union board.

Babu Pravas Chandra Sinha.
Babu Hazarilal Biswas.
Babu Satish Chandra Mandal.

Natudah union board.

Babu Bepin Muchi.
Babu Jnanendranath Mukhopadhyay.
Babu Binay Krishna Pal Choudhury.

Nadia, the 13th July 1936.

No. 2170L.S.-G. — It is notified for general information that, under sub-section *(3)* of section 6 of the Bengal Village Self-Government Act, 1919 (Bengal Act V of 1919), the following gentl men have been appointed by the District Magistrate of Nadia to be members of the undermentioned union boards in police-stations mentioned below in the Kushtia subdivision of Nadia district :—

Kushtia police-station.

No. 1—Puratan Kushtia union board.

Munshi Hazi Alimoddin Mian.
Munshi Nuruddin Pramanick.
Babu Jogendra Nath Biswas.

No. 2—Hatosh Haripur union board

Munshi Muhammad Azizar Rahman.
Babu Hridoy Nath Mandal.
Munshi Samiruddin Mian.

No. 3—Barkhada union board.

Maulvi Moyenuddin Ahmed.
Babu Birinchi Lal Pramanick.
Munshi Khabiruddin Ahmed.

No. 4—Majampur union board.

Munshi Huzzatullah Mondal.
Babu Bishnucharan Ghose
Babu Nripendra Narayan Biswas.

No. 5—Jagati union board.

Maulvi Mir Abdus Razzak.
Babu Hajari Gopal Sen.
Babu Surendra Nath Mistri.

No. 6—Jorakhi union board.

Munshi Abdul Aziz Molla.
Munshi Serajali Mandal.
Babu Tustu Lal Joardar.

No. 7—Alampur union board.

Munshi Ahad Ali Biswas.
Babu Jugal Krishna Biswas.
Munshi Asraf Biswas.

No. 8—Ailchara union board.

Munshi Forman Ali Joardar.
Babu Bishnu Pada Ghosh.
Babu Keshab Chandra Pramanick.

No. 9—Patikabari union board.

Munshi Elahi Box Biswas.
Babu Ramnath Saha.
Babu Benawari Lal Biswas.

No. 10—Jhaudia union board.

Munshi Joakkel Biswas.
Babu Lalit Mohan Saha.
Munshi Keamuddi Biswas.

No. 11—Ujangram union board.

Munshi Muhammad Basiruddin Molla.
Babu Kshetra Nath Biswas.
Babu Narendra Nath Dutta.

No. 12—Abdalpur union board.

Munshi Abdul Sobhan Biswas.
Babu Hem Chandra Naskar.
Babu Purna Chandra Adhikari.

No. 13—Harinarayanpur union board.

Munshi Makimuddin Biswas.
Munshi Danesuddin Molla.
Babu Charu Bhusan Bagchi.

Kumarkhali police-station.

No. 2—Sholidah union board.

Munshi Abu Doud.
Munshi Hekmat Ali Khan.
Babu Rai Mohan Biswas.

No 3—Jagannathpur union board.

Babu Debendra Nath Biswas.
Babu Satish Chandra Sarkar.
Babu Kunja Bihari Sarkar.

No. 4—Kanthagazra union board.

Munshi Kofiluddin Molla.
Babu Kshitish Chandra Ghosh.
Munshi Sheikh Abdar Rahaman.

No. 6—Sadaki union board.

Munshi Moyejuddin Biswas.
Babu Kalipada Biswas.
Babu Dwijendra Nath Roy.

No. 7—Nandalalpur union board.

Maulvi K. M. Golam Sarwar.
Munshi Asamuddin Sardar.
Babu Upendra Nath Ghose.

No. 8—Chapra union board.

Munshi Tasiruddin Malitha.
Babu Indu Bhusan Das.
Babu Hemlal Biswas.

No. 9—Bagulat union board.

Babu Haripada Nag.
Babu Shyama Charan Mazumdar.
Munshi Jonab Ali Khan.

Khoksa police-station.

No. 2—Someshpur union board.

Munshi Azimuddin Ahmed.
Munshi Seikh Abdul Wahed.
Babu Tustu Lal Mandal.

No. 3—Simulia union board.

Babu Jadu Nath Dutta.
Babu Jagat Bandhu Biswas.
Munshi Basiruddi Molla.

No. 5—Osmanpur union board.

Babu Nirod Baran Sarkar.
Babu Gnanendra Mohan Majumdar.
Babu Nripendra Nath Biswas.

No. 6—Betbaria union board.

Munshi Muhammad Eusof Ali.
Babu Srish Chandra Chakravarty.
Babu Panchanan Haldar.

No. 7—Jayantihazra union board.

Babu Monoranjan Maitra.
Munshi Muhammad Pradhan Mal.
Munshi Ahammad Ali Biswas.

Bheramara police-station.

No. 1—Bahadurpur union board.

Babu Rasik Lal Haldar.
Babu Panchanan Ray.
Munshi Muhammad Erad Ali.

No. 2—Golapnagar union board.

Dr. Muhammad Fazlul Huq.
Babu Lakshmi Narayan Biswas.
Maulvi A. S. M. Shamsul Huq.

No. 3—Juniadah union board.

Babu Upendra Nath Mukherjee.
Maulvi Khondkar Abdul Huq.
Dr. Ananga Mohan Majumdar.

No. 4—Mokarimpur union board.

Babu Narapati Biswas.
Babu Krishnabandhu Swarnakar.
Maulvi Emdad Ali (Doctor).

No. 5—Dharampur union board.

Babu Krishna Gobinda Goswami.
Babu Janaki Nath Kundu.
Maulvi Mansur Ahmed Khan.

No. 6—Bheramara union board.

Babu Bhabesh Chandra Majumdar.
Munshi Akher Ali Molla.
Dr. Bidyendra Sekhar Biswas.

Daulatpur police-station.

No. 1—Pragpur union board.

Maulvi Tasiruddin Ahmed.
Munshi Golam Hussain Biswas.
Babu Sasadhar Chandra Ghosh.

No. 2—Mathurapur union board.

Maulvi Muhammad Sariat Ulla.
Munshi Mir Haidar Ali.
Babu Jagat Chandra Pal.

No. 5—Hogolbaria union board.

Babu Moni Mohan Biswas.
Babu Jogendra Nath Pal.
Munshi Ayezuddin Mondal.

No. 7—Refaitpur union board.

Babu Surendra Nath Mondal.
Munshi Kinoo Mondal.
Munshi Jainal Abedin.

No. 8—Daulatpur union board.

Babu Abinash Chandra Biswas.
Babu Monoranjan Biswas.
Munshi Abu Affan Mian.

No. 9—Adabaria union board.

Babu Debendra Kumar Biswas.
Maulvi Syed Momtaz Ali.
Babu Panchanan Biswas.

No. 10—Boalia union board.

Babu Bata Krishna Biswas.
Munshi Lal Chand Biswas.
Munshi Muhammad Kasimuddin.

No. 12—Aria union board.

Babu Narayan Pada Mukherjee.
Munshi Habibur Rahman Molla.
Munshi Johiruddin Molla.

Mirpur police-station.

No. 2—Bahalbaria union board.

Babu Makhan Lal Majumdar.
Maulvi Muhammad Tafazzal Hussain.
Munshi Muhammad Guljar Hussain.

No. 3—Talbaria union board.

Babu Rakhalraj Saha.
Babu Surendra Nath Saha.
Babu Upendra Nath Bhowmick.

No. 4—Baruipara union board.

Maulvi Muhammad Alauddin.
Munshi Khabiruddin Ahmed.
Babu Satish Chandra Nath.

No. 5—Mirpur union board.

Maulvi Muhammad Mosaruf Hussain Chowdhury.
Babu Amiya Charan Dutta.
Babu Purna Chandra Adhikary.

No. 6—Amla union board.

Babu Sudhir Kumar Goswami.
Maulvi Kazi Aftabuddin.
Maulvi Mirja Kausaruddin Ahmed.

No. 7—Sadarpur union board.

Maulvi Ali Muhammad.
Munshi Momin Malitha.
Babu Bipradas Adhikari.

No. 8—Chhatian union board.

Maulvi Muhammad Idris Ali.
Maulvi Muhammad Kafiluddin.
Babu Satish Chandra Nath.

No. 10—Kursa union board.

Babu Debendra Nath Joardar.
Babu Radha Binod Pramanick.
Munshi Abul Hussain Biswas.

No. 11—Malirhad union board.

Babu Tarakbrahma Brahmachari.
Munshi Abbas Ali Biswas.
Babu Nani Gopal Nandi.

No. 12—Ambaria union board.

Babu Rati Kanta Saha.
Dr. Bepin Behari Biswas.
Babu Prasanna Kumar Sarkar.

S. K. DAS GUPTA, *District Magistrate*.

Jessore, the 15th July 1936.

Erratum.—In the notification, dated the 29th May 1936, under sub-sections (*2*) and (*3*) of section 6 of the Bengal Village Self-Government Act, 1919 (Bengal Act V of 1919), published at pages 1513 to 1517 of the *Calcutta Gazette*, dated the 18th June 1936, the following corrections are made :—

Lohagora police-station.

(*a*) Lahuria union board.

Read Maulvi Sayed Muhammad Monayem Ali *for* the 4th name Maulvi Sayed Muhammad Monafmali.

(*b*) Lakshmipassa union board.

Read Babu Jyotish Chandra Kar *for* the 2nd name Babu Jotish Chandra Kar.

(*c*) Kotakole union board.

Read Babu Gosai Das Sarkar *for* the 1st name Babu Gosal Das Sarkar.

(*d*) Lohagora union board.

Read Syed Nawabali *for* the 1st name Syed Naib Ali.

Alfadanga police-station.

(*a*) Gopalpur union board.

Delete the name of Munshi Abdul Jubber Talukdar and *add* the name of Munshi Abdul Hakim Mia.

(*b*) Alfadanga union board.

Read Munshi Romjan Molla *for* the 3rd name Munshi Romejan Molla.

(*c*) Buraich union board.

Read Maulvi Ahmeduzzaman *for* the 1st name Maulvi Ahmaduzzaman.

(*d*) Tagorebanda union board.

Read Munshi Manzural Haq Mia *for* the 3rd name Mansural Manzural Haq Mia and Munshi Abual Hashem Mia *for* the 4th name Munshi Abual Hossain Mia.

Kalia police-station.

(*a*) Mauli union board.

Read Munshi Keamuddin Molla *for* the 5th name Keamaddin Molla.

(*b*) Khashial union board.

Read Maulvi Abdul Wahed Biswas *for* the 1st name Maulvi Abdul Wahad.

(*c*) Baisena union board.

Read the name of the union board Baoisona instead of Baisena.

(*d*) Purulia union board No. II.

Read Munshi Nesaruddin Shaik *for* the 1st name Munshi Nasaruddin Sheikh.

(*e*) Kalia union board.

Read Babu Abani Ranjan Das *for* the 1st name Babu Abani Ranjan Das Gupta and Babu Naresh Chandra Das Gupta (Junior) *for* the 3rd name Babu Naresh Chandra Das Gupta.

Narail police-station.

(*a*) Narail union board.

Read Maulvi Rahimdad Siddique *for* the 4th name Mir Rahimdad Siddique.

(*b*) Read the name of the union board Kolora instead of Karora.

(*c*) Bansgram union board.

Read Munshi Azizuddin *for* the 6th name Munshi Azizaddin.

(*d*) Bichali union board.

Read Hymal Biswas *for* the 6th name Biswas Haymal.

(*e*) Durgapur union board.

Read Babu Bisweswar Das *for* the 3rd name Babu Rameswar Das.

Erratum.—In the notification, dated the 22nd June 1936, under sub-sections (*2*) and (*3*) of section 6 of the Bengal Village Self-Government Act, 1919 (Bengal Act V of 1919), published at pages 1661 to 1663 of the *Calcutta Gazette*, dated the 2nd July 1936, the following corrections are made :—

Sailkupa police-station.

(*a*) Bagura union board.

Read Munshi Belayet Ali Mian *for* the 2nd name Munshi Delayet Ali Mian and Sashi Charan Nath *for* the 3rd name Shasthi Charan Nath.

(*b*) Aguniapara-Benipur union board.

Read Munshi Najiruddin Khan *for* the 5th name Munshi Najiruddin Biswas.

(*c*) Fazilpur union board.

Read Munshi Kader Dad Khan *for* the 2nd name Munshi Kader Khan Dad.

Kaliganj police-station.

(*a*) Trilochanpur union board.

Read Sailendra Gopal Mitra *for* the 1st name Surendra Gopal Mitra.

(*b*) Mandarbaria union board.

Read Babu Bhushan Chandra Ghosh *for* the 3rd name Bhubon Chandra Ghosh.

(c) Maliat union board

Read Babu Bhushan Chandra Mistri *for* the 6th name Bhushan Chandra Mitra.

Harinakundu police-station.

(a) Raghunathpur union board.

Read Babu Fakir Chand Biswas *for* the 4th name Kakir Chand Biswas.

Erratum.—In the notification, dated the 11th May 1936, under sub-section (2) of section 6 of the Bengal Village Self-Government Act, 1919 (Bengal Act V of 1919), published at pages 1156 to 1162 of the *Calcutta Gazette*, dated the 21st May 1936, the following corrections are made :—

Kotwali police-station.

Lebutola union board.

Read Muhammad Arman Biswas of Andolpota *for* Muhammad Arman Biswas of Gobra.

Jhinkergacha police-station.

Chaugacha union board

Read Muhammad Sahiduddin Biswas *for* the 4th name Md. Sabiuddin Biswas.

Manirampur police-station.

Khanpur union board.

M *Read* Mir Akkel Ali *for* the 1st name M. Mir Mobarek Ali.

H DATTA, for *District Magistrate*.

Bengal National Chamber of Commerce Constituency of the Bengal Legislative Council.

Calcutta, the 17th July 1936.

NOTICE.

It is hereby notified for the information of all concerned that the following candidates have been duly nominated for election to the Bengal Legislative Council from the Bengal National Chamber of Commerce Constituency in connection with the ensuing by-electon from the Chamber Constituency to fill the vacancy caused by the death of Mr Surendra Nath Law :--

1. Kumar Kartick Chuni Mullick.
2. Mr. P. C. Coomar.
3. Mr. Rakhal Chandra Dutt.

NARENDRA NATH LAW, *Returning Officer*.

Rajshahi Division—Jalpaiguri.

No. 3387M.—14th July 1936.—Whereas by notification No. 6760L S.-G., dated the 7th December 1935, the Hindu community has been declared a minority community in the area under the authority of the district board of Pabna and the local boards of Sadar and Serajganj in the district of Pabna, it is hereby notified that in exercise of powers conferred on me by the proviso to rule 19 of the Election Rules under the Local Self-Government Act of 1885 (Act III of 1885) I determine that in the two local boards in the district of Pabna the following special seats be reserved for the Hindus :—

Sadar local board—3.

Serajganj local board—3.

It is further ordered under rule 19 of the above rules that the number of persons to be elected from each board in the district to the local boards should be as shown below against each thana :—

Thana.	Number of members to be elected for the thana.	
	General seats.	Special seats for the minority community.
Pabna district.		
Sadar local board.		
Sara	1	..
Pabna } Atghoria }	2	..
Chatmohor .. .	1	1
Faridpur	1	..
Sujanagar	1	1
Santhia	2	..
Mathura (Bera) ..	1	1
	9	3
Serajganj local board.		
Shazadpur	1	1
Chowhali	1	..
Kamar Khund ..	1	..
Ullapara	1	1
Rayganj	1	..
Taras	1	..
Serajganj	1	1
Kazipur	1	..
Bel Kuchi	1	..
	9	3

This cancels notifications Nos. 1733M and 3600M., dated the 8th July 1921 and 20th October 1931, respectively, published at pages 1179 and 1748, Part I of the *Calcutta Gazette*, dated the 13th July 1921 and 15th October 1931, in respect of Sadar and Serajganj local boards.

F. W. ROBERTSON, *Commissioner*.

No. 2920J.—16th July 1936 -Maulvi Syed Abdul Ali, Circle Officer, Setabganj, in Dinajpur district, is transferred to Thakurgaon as Circle Officer.

The transfer is made in the public interest.

No. 2924J 16th July 1936.—Babu Harendra Chandra Barori, Sub-Deputy Collector and Circle Officer, Balurghat, in the district of Dinajpur, is transferred to Thakurgaon in the same district to be on general duties.

The transfer is made in the public interest.

No. 2928J.—16th July 1936.—Babu Gopi Krishna Bagchi, Circle Officer, Thakurgaon, in Dinajpur, is transferred to Setabganj in the same district as Circle Officer.

The transfer is made in the public interest.

No 2932J.—16th July 1936.—Babu Hem Bhusan Dutta, Sub-Deputy Magistrate, Thakurgaon, in the district of Dinajpur, is transferred to Balurghat in the same district, to work as Circle Officer, Balurghat Circle.

The transfer is made in the public interest.

L. R. FAWCUS, *Commissioner (offg.).*

Orders by the Deputy Inspector-General of Police, Rajshahi Range.

Jalpaiguri.—No. 4999.—10th July 1936.—Maulvi Saiyid Azizur Rahman, Inspector, Rangpur, is granted, on medical certificate, leave for 4 months, viz., 29 days' privilege leave, under Article 260, Civil Service Regulations, and the rest commuted furlough, under Article 316A, Civil Service Regulations (New Leave Rules), with effect from the date on which he may be relieved.

Sub-Inspector Jitendra Chandra Mukharji of Rangpur (now officiating Inspector) is appointed to act as Inspector in the above vacancy.

Maulvi Afazuddin Ahmad, Inspector, Rajshahi, is granted 21 days' leave on average pay, under rule 81 (*b*) (*ii*) of the Fundamental Rules, with effect from the date on which he may avail himself of it.

Sub-Inspector Krishna Gobinda Chaudhuri, Officer-in-charge, Natore police-station, will remain in charge of the current work of the Inspector in addition to his own during the leave of Maulvi Afazuddin Ahmad, Inspector.

No. 5205.—17th July 1936.—Maulvi Muhammad Azizur Rahman (II), Inspector, Dinajpur, is granted 15 days' leave on average pay, under rule 81 (*b*) (*ii*) of the Fundamental Rules, in extension of the leave already granted to him.

The existing acting arrangement will continue.

Babu Sarada Kumar Bhattacharji, Inspector, Rangpur, is granted 2 months and 15 days' leave on average pay, on medical certificate, under rule 81 (*b*) (*ii*) of the Fundamental Rules, in extension of the leave already granted to him.

With effect from the date of assuming charge Sub-Inspector Surendra Nath Dhar of Rangpur is appointed to act as Inspector in the above vacancy.

E. B. JONES,

Deputy Inspector-General of Police.

Registered No. C207

The Calcutta Gazette

THURSDAY, JULY 23, 1936.

PART IA

Orders and Notifications by the Government of India republished for general information.

FINANCE DEPARTMENT.

NOTIFICATIONS.

Simla, the 9th July 1936.

No. F. 10 (28)-R.I/35.—In exercise of the powers conferred by sub-rule (2) of rule 33, rules 37 and 42 and clause (*d*) of rule 44 of the Civil Services (Classification, Control and Appeal) Rules, the Governor General in Council is pleased to direct that the amendments to Fundamental Rules made by the Secretary of State in Council as published in the Government of India, Finance Department, notifications No. F. 10 (28)-R.I/35, dated the 9th July 1936, shall apply, and from the date on which they were made by the Secretary of State in Council shall be deemed always to have applied, to the services in respect of which power to make rules is delegated to the Governor General in Council in the said rules.

No. F. 10 (28)-R.I/35.—The following Resolution by the Secretary of State for India in Council is published for general information :—

In exercise of the powers conferred by sub-section (2) of section 96B of the Government of India Act, the Secretary of State, with the concurrence of the majority of votes at a meeting of the Council of India held this eleventh day of February 1936, hereby makes the following amendments in the Civil Service Regulations, namely :—

(1) In the heading to Chapter X of the said regulations, after the word "dismissed", the word "removed" shall be inserted.

(2) In Article 192 of the said regulations, after the word "dismissed", the words "or removed" shall be inserted, and after the word "dismissal", in both places where it occurs, the words "or removal" shall be inserted.

(3) In Article 193 of the said regulations,—

(*a*) in clause (*b*), after the words "an officer dismissed", the words "or removed" shall be inserted,

(*b*) in sub-clause (*i*) of clause (*b*), after the word "dismissed", the words "or removed" shall be inserted, and after the word "suspension", the word "removal" shall be inserted ; and

(*c*) in clause (*c*), after the word "suspension", the word "removal" shall be inserted.

No. F. 10 (28)-R.I/35.—The following Resolutions by the Secretary of State for India in Council are published for general information :—

(1) In exercise of the powers conferred by sub-section (2) of section 96B of the Government of India Act, the Secretary of State with

the concurrence of the majority of votes at a meeting of the Council of India held this eleventh day of February 1936, hereby makes the following amendments in the Fundamental Rules, namely :—

(1) In the heading to Chapter VIII of the said rules, after the word, "dismissal", the word "removal" shall be inserted.

(2) In rule 52 of the said rules, after the word "dismissed" the words "or removed" shall be inserted and after the word "dismissal" the words "or removal" shall be inserted.

(2) In exercise of the powers conferred by sub-section (2) of section 96B of the Government of India Act, the Secretary of State with the concurrence of the majority of votes at a meeting of the Council of India held this 9th day of June 1936, hereby makes the following amendment in the Fundamental Rules, namely :—

For Fundamental Rule 54 of the said Rules the following shall be substituted, namely :—

"When the suspension of a Government servant as a penalty for misconduct is, upon reconsideration or appeal, held to have been unjustifiable or not wholly justifiable ; or

When a Government servant who has been dismissed or removed, or suspended pending enquiry into alleged misconduct, is reinstated ;

the revising or appellate authority may grant to him for the period of his absence from duty—

(*a*) if he is honorably acquitted, the full pay to which he would have been entitled if he had not been dismissed, removed or suspended and, by an order to be separately recorded, any allowance of which he was in receipt prior to his dismissal, removal or suspension ; or

(*b*) if otherwise, such proportion of such pay and allowances as the revising or appellate authority may prescribe.

In a case falling under clause (*a*), the period of absence from duty will be treated as a period spent on duty. In a case falling under clause (*b*), it will not be treated as a period spent on duty unless the revising or appellate authority so direct".

No. F. 21-(14)-R. II/36.—In exercise of the powers conferred by sub-rule (2) of rule 33, rule 37, rule 42 and clause (*d*) of rule 44 of the Civil Services (Classification, Control and Appeal) Rules, the Governor General in Council is pleased to direct that the following further amendments shall be made in the Contributory Provident Fund Rules (India), namely :—

In sub-rule (6) of rule 11, in the second proviso to sub-rule (1) of rule 20, in clause (*i*) of sub-rule (1) and in the proviso to sub-rule (2) of rule 21, and in sub-rule (2) of rule 22 of the said Rules for the words, brackets and figures "sub-rule (3) of rule 19" the words, brackets and figures "sub-rule (4) of rule 19" shall be substituted.

No. F. 21-(14)-R. II/36.—In exercise of the powers conferred by sub-rule (2) of rule 33, rule 37, rule 42 and clause (*d*) of rule 44 of the Civil Services (Classification, Control and Appeal) Rules, and of his powers in respect of personnel serving under his control who have been excluded from the scope of the said Rules, the Governor General in Council is pleased to direct that the following further amendments shall be made in the General Provident Fund (Central Services) Rules, namely :—

In sub-rule (6) of rule 14, in the second proviso to sub-rule (1) of rule 23, in clause (*i*) of sub-rule (1) and in the proviso to sub-rule (2) of rule 24, and in rule 26 of the said Rules for the words, brackets and figures "sub-rule (3) of rule 21" the words, brackets and figures "sub-rule (4) of rule 21" shall be substituted.

No. F. 1 (9)-R. I/36.—The following Resolution by the Secretary of State for India in Council is published for general information :—

In exercise of the powers conferred by sub-section (2) of Section 96-B of the Government of India Act, the Secretary of State, with the concurrence of a majority of votes at a meeting of the Council of India, held this 9th day of June 1936, hereby makes the following amendments in the Fundamental Rules, namely :—

(1) For clause (4) of Rule 9 of the said Rules, the following clause shall be substituted, namely :—

"(4) *Cadre* means the strength of a service or a part of a service sanctioned as a separate unit."

(2) For rule 113 of the said Rules, the following shall be substituted, namely :—

"113. A Government servant transferred to foreign service shall remain in the cadre or cadres in which he was included in a substantive or officiating capacity immediately before his transfer, and may be given such substantive or officiating promotion in

those cadres as the authority competent to order promotion may decide. In giving promotion, such authority shall take into account—

(*a*) the nature of the work performed in foreign service, and

(*b*) the promotion given to juniors in the cadre in which the question of promotion arises."

RESOLUTION.

The 9th July 1936.

No. F. 1 (9)-R. I/36.—In exercise of the powers conferred by sub-rule (2) of rule 33, rule 37, rule 42 and clause (*d*) of rule 44 of the Civil Services (Classification, Control and Appeal) Rules, the Governor General in Council is pleased to direct that the following further amendment shall be made in the Fundamental Rules in their application to personnel subject to his rule-making control, namely:—

(1) For clause (4) of Rule 9 of the said Rules, the following clause shall be substituted, namely:—

"(4) *Cadre* means the strength of a service or a part of a service sanctioned as a separate unit."

(2) For rule 113 of the said Rules, the following shall be substituted, namely:—

"113. (*i*) A Government servant transferred to foreign service shall remain in the cadre or cadres in which he was included in a substantive or officiating capacity immediately before his transfer, and may be given such substantive or officiating promotion in those cadres as the authority competent to order promotion may decide. In giving promotion, such authority shall take into account—

(*a*) the nature of the work performed in foreign service, and

(*b*) the promotion given to juniors in the cadre in which the question of promotion arises."

(*ii*) Nothing in this rule shall prevent a member of a subordinate service from receiving such other promotion in Government service as the authority who would have been competent to grant the promotion had he remained in Government service may decide."

ORDERED that the Resolution be published in the *Gazette of India*.

J. C. NIXON,

Secy. to the Govt. of India.

FINANCE DEPARTMENT (CENTRAL REVENUES).

NOTIFICATION

SALT.

Simla, the 11th July 1936.

No. 14.—In exercise of the powers conferred by section 27 of the Indian Salt Act, 1882 (XII of 1882), the Governor General in Council is pleased to make the following rule:—

Rule.

Within the districts in Bengal to which section 27 of the Indian Salt Act, 1882 (XII of 1882), for the time being extends, the transport of salt in excess of one maund in weight from any of the areas specified in the annexed schedule into or over any part of the said districts other than the said areas is prohibited unless satisfactory proof of the payment of the duty has been adduced.

SCHEDULE.

1. Midnapore—

Area bounded on the North by the Orissa Coast Canal and its continuation, the Hizli Tidal Canal and on the South by the Bay of Bengal.

2. Howrah—

1. *Syampur police-station*—

Entire thana.

2. *Uluberia police-station*—

(*a*) Kalinagore Union.
(*b*) Dhula Simla Union.

3. *Bagnan police-station*—

(*a*) Mellok Union.
(*b*) Kalyanpur Union.

3. Noakhali—

1. *Noakhali thana*—

(*a*) Lohachora Union.
(*b*) Dadpur Union.
(*c*) Ewazbalia Union.
(*d*) Benodepur Union.
(*e*) Aswadia Union.
(*f*) Sundalpur Union.
(*g*) Gulla Khali.
(*h*) Char Jabbar.

2. *Companiganj thana*—

(*a*) Char Fakira Union.
(*b*) Rampur Union.
(*c*) Musapur Union.

3. *Lakhimpur thana*—

(*a*) Lakshimpur Union.
(*b*) Sakehar Union.
(*c*) Bhabaniganj Union.
(*d*) Farashganj Union.
(*e*) Char Bansi Union.

4. *Sandwip thana*—

(*a*) Entire thana.

5. *Hatiya thana*—

(*a*) Police-station Hatiya.
(*b*) Police-station Ramgati.

6. *Feni thana*—

(*a*) Char Darbesh Union.
(*b*) Mutiganj Union.
(*c*) Sonaganj Union.

4. 24-Parganas—

1. *Sadar subdivision*—

(*a*) Bhangor police-station.
(*b*) Canning police-station.
(*c*) Joynagore police-station.
(*d*) Budge Budge police-station.
(*e*) Bistupur police-station.
(*f*) Baruipur police-station.
(*g*) Sonarpur police-station.

2. *Diamond Harbour subdivision*—

(*a*) Diamond Harbour police-station.
(*b*) Mograhat police-station.
(*c*) Mathurapur police-station.
(*d*) Falta police-station.
(*e*) Kulpi police-station.
(*f*) Kakdwip police-station.
(*g*) Sagore police-station.

3. *Basirhat subdivision*—

(*a*) Hasnabad police-station.
(*b*) Sandeshkhali police-station.
(*c*) Harora police-station.

4. *Barasat subdivision*—

(*a*) Deyganga police-station.
(*b*) Rajarhat police-station.

5. *Barrackpur subdivision*—

(*a*) Dum Dum police-station.

5. Bakarganj—

1. *Bhola subdivision*—

(*a*) Entire subdivision.

2. *Patuakhali subdivision*—

(*a*) Galachipa thana.
(*b*) Amtali thana.
(*c*) Bargoona thana.
(*d*) Bowfal thana.

3. *Perojpur subdivision*—

(*a*) Patharghata thana.
(*b*) Mathbaria thana.

6. Chittagong—

1. *Cox's Bazar subdivision*—

(*a*) Entire subdivision.

2. *Police-station Banskhali*—

(*a*) Raichatta Union.
(*b*) Baharchara Union.
(*c*) Gandamara Union.

3. *Anwara police-station*—

(*a*) Baraset Union.
(*b*) Raipur Union.

4. *Doublemoorings police-station*—

(*a*) Patinga Union.

7. Khulna—

1. *Khulna subdivision*—

(*a*) Dacope police-station.
(*b*) Raikgacha police-station.

2. *Bagerhat subdivision*—

(*a*) Morrelganj police-station.
(*b*) Serankhola police-station.
(*c*) Rampal police-station.

3. *Satkhira subdivision*—

(*a*) Debhatta police-station.
(*b*) Kaliganj police-station.
(*c*) Shyamnagore police-station.
(*d*) Assasuni police-station.

A. H. LLOYD,
Joint Secy. to the Govt. of India.

HOME DEPARTMENT.

NOTIFICATIONS.

JUDICIAL.

Simla, the 9th July 1936.

No. F. 25/8/36.—The Hon'ble Mr. Justice J. R. E. Cunliffe, Kt., Barrister-at-Law, a Judge of the High Court of Judicature at Fort William in Bengal, is granted leave on full allowances from the 9th November to the 21st November 1936, both days inclusive.

J. A. THORNE,

Joint Secy. to the Govt. of India.

POLICE.

Simla, the 3rd July 1936.

No. F. 114/17/36.—His Excellency the Viceroy and Governor General of India has been pleased to confer the Indian Police Medal on the following officers:—

Bengal.

1. Babu Loke Nath Das, Officiating Sub-Inspector.—This officer joined the police in 1917. He displayed commendable gallantry and devotion to duty on the 3rd April 1936 on the occasion of the arrest of an armed terrorist absconder who opened fire on him.

2. Sital Ram Gore, Constable.—This constable joined the police force in the year 1909. He showed conspicuous gallantry on the 3rd April 1936 when he grappled with a terrorist absconder who had opened fire on him when attempting to avoid arrest.

N.B.—These awards are for gallantry under regulation (*d*) (*i*) of the regulations governing the grant of the Indian Police Medal and consequently carry with them the special allowances admissible to officers of and below the rank of Inspector of Police.

The 8th July 1936.

No. F. 10/2/35.—The services of Major J. K. Jones, 2nd Battalion, 6th Gurkha Rifles, are placed at the disposal of the Government of Bengal, for employment with the Eastern Frontier Rifles, with effect from the afternoon of the 2nd May 1936.

M. G. HALLETT,

Secy. to the Govt. of India.

DEPARTMENT OF EDUCATION, HEALTH AND LANDS.

NOTIFICATION.

AGRICULTURE.

Simla, the 20th May 1936.

No. F. 27-14/35.—In exercise of the power conferred by section 15 of the Indian Cotton Cess Act, 1923 (XIV of 1923), the Governor General in Council is pleased to direct that the following further amendment shall be made in the Indian Cotton Cess Rules, 1923, namely :—

In Form A of the Forms appended to the said Rules for clause (*d*) the following clause shall be substituted, namely :—

"(*d*) Number of pounds avoirdupois of Indian cotton consumed or brought under process in the mill during the month of.....19 .

(1) Pressed cotton.....

(2) Unpressed cotton.....

Total ..

M. S. A. HYDARI,

Joint Secy. to the Govt. of India.

FOREIGN AND POLITICAL DEPARTMENT.

NOTIFICATIONS.

Simla, the 8th July 1936.

No. 418-I.B.—In exercise of the powers conferred by section 22 of the Indian Extradition Act, 1903 (XV of 1903), the Governor General in Council is pleased to direct that the following further amendment shall be made in the notification of the Government of India in the Foreign and Political Department, No. 107-I, dated the 24th February 1932, namely:—

In the First Schedule to the said notification in Part A.—*States permanently included in the Schedule*, for the headings "*Bihar and Orissa*" and "*Assam*" and the entries thereunder the following headings and entries shall be substituted, namely:—

"*Eastern States Agency.*

119. Athgarh.

120. Athmallik.

121. Bamra.

122. Baramba.

123. Bastar.

124. Baudh.
125. Bonai.
126. Changbhakar.
127. Chhuikhadan.
128. Daspalla.
129. Dhenkanal.
130. Gangpur.
131. Hindol.
132. Jashpur.
133. Kalahandi.
134. Kanker.
135. Kawardha.
136. Keonjhar.
137. Khairagarh.
138. Khandpara.
139. Kharsawan.
140. Korea.
141 Mayurbhanj.
142. Nandgaon.
143. Narsinghpur.
144. Nayagarh.
145. Nilgiri.
146. Pal-Lahara.
147. Patna.
148 Raigarh.
149. Rairakhol.
150. Ranpur.
151. Sakti.
152. Sarangarh.
153. Seraikela.
154. Sonepur.
155. Surguja.
156. Talchar.
157. Tigiria.
158. Udaipur.

Assam.

159. Manipur."

B. J. GLANCY,

Political Secy. to the Govt. of India.

The 7th July 1936.

No. 412-X.—Mr. Thomas Rogers is appointed to be His Majesty's Honorary Vice-Consul in the French Establishments in India, Pondicherry, with effect from the 5th June 1936.

H. A. F. METCALFE.

Foreign Secy. to the Govt. of India.

Registered No. C207

The Calcutta Gazette

THURSDAY, JULY 23, 1936.

PART IB

Educational Notices.

Dacca Medical School.

Dacca, the 3rd July 1936.

Admission to the Compounders Class Session, 1936-37.

Applications for admission to the Compounders Class of the Dacca Medical School will be received from 15th July to 10th August 1936.

Applications should be supported by (*a*) a true copy of certificate of passing the Matriculation or its accepted equivalent, (*b*) a testimonial of good moral character from a Deputy Magistrate or a gentleman of equal position or from the Principal or Head Master of the college or school in which the candidate last studied, (*c*) a certificate of age—Matriculation certificate or a certificate from the head of the institution in which the candidate last studied will also be accepted as evidence of age.

Applications from the candidates must reach the office of the Superintendent between 15th July and 10th August 1936 for registration of their names and they must attend for personal interview on the 17th August 1936, at 8 a.m., in the school, and bring with them the original certificates.

Late or incomplete applications will not be entertained.

Every male student who is selected for admission shall pay an entrance fee of Rs. 4 and first half-yearly instalment of Rs. 12 as tuition fee. He shall also pay annual sports fee of Rs. 2.

R. LINTON, MAJOR, I.M.S.,
Superintendent, Dacca Medical School.

The Accountancy Diploma Board, Bombay.

Bombay, the 8th July 1936.

It is hereby notified that the Government of Bombay have, on the recommendation of the Accountancy Diploma Board, Bombay, awarded the Government Diploma in Accountancy to the undermentioned twelve candidates, who have passed the prescribed professional examination and received an adequate practical training in Accounts. These candidates will henceforward be styled "Government Diplomates in Accountancy" and authorised to affix the letters "G.D.A." to their names :—

(609) Mr. Mahomedbhoy Rasulbhoy Bohra, B.COM., of Bombay.

(610) Mr. K. V. R. Sarma of Bombay.

(611) Mr. Moreshwar Nilkanth Bhagwat of Bombay.

(612) Mr. Nariman Ardeshir Polishwala of Bombay.

(613) Mr. Satyaranjan Datta, B.SC., of Calcutta.

(614) Mr. Ram Mohun Rao Parnandi of Kharagpur.

(615) Mr. S. Ramanathan of Madras.

(616) Mr. M. G. Srinivasan of Vontikoppal.

(617) Mr. V. Krishnaswami of Madras.

(618) Mr. V. Natarajan of Madras.

(619) Mr. M. S. Srinivasan, B.A., of Coimbatore.

(620) Mr. Shiam Behari Lal Vaish of Cawnpore.

M. L. TANNAN, *Secy.*,
Accountancy Diploma Board, Bombay.

Orders by the Vice-Chancellor and Syndicate of the Calcutta University.

Senate House, the 16th July 1936.

1. The undermentioned candidates at the Matriculation Examination, 1936, whose results were withheld from publication, as announced in the *Calcutta Gazette*, dated the 18th June 1936, on page 1016, are hereby declared to have passed the examination :—

Roll No. Cal.	Name.	Age.	Division.
	St. Anthony's High School.		
678	M. F. Fernandes ..	24-3	Second.
	St. Chrysostom's High School.		
2063	Peter Pinto ..	18-10	Second.
2064	Jose Felippe Forcato ..	24-0	Second.
	Calcutta Model Academy.		
3200	Bhairo Prasad Rohatgi ..	18-3	Third.
3201	Pande Jadu Bans Sharma ..	17-4	Second.
3202	Bhubaneswari Prosad ..	16-11	Third.
3205	Damodar Prasad Roy ..	18-7	Second.
3209	Badri Narain Pande ..	17-2	Second.
3217	Jatindra Nath Verma ..	16-6	Second.
3218	Ramchandra Mishra ..	15-6	Second.
3223	Gopaljee Prosad ..	18-1	Second.
3227	Braj Kishore Sinha ..	16-9	Second.
3229	Govinda Prasad Sinha ..	15-8	Third.
3233	Ramchandra Prasad Gupta ..	15-3	Second.
3234	Harinandan Prosad Singh ..	17-4	Second.
3237	Subodhchandra Tripathi ..	17-2	First.
3247	Barunjib Barua (L) ..	16-2	First.
3258	Devi Dutt Agarwallah ..	15-5	Second.
3259	Jag Mohan Rohatgi (L) ..	16-1	First.
3260	Tilakdhari Prasad ..	17-1	First.
3264	Lalit Narayan Gupta ..	16-7	Second.
3273	Ramlakhan Singh ..	16-1	Second.
3274	Nabalkishore Sahay ..	17-6	Second.
3275	Suresh Mishra ..	17-8	First.
3277	Umesh Narayan Sinha ..	16-3	First.
3280	Chandrasekhar Sarma ..	17-0	First.
3281	Uma Nand Sinha Jha ..	16-3	Second.
3282	Badri Nath Thakur ..	16-10	Second.
3286	Indra Shankar ..	15-7	Second.
3287	Debesh Mishra ..	17-2	First.
3301	Sundar Raj Pandit ..	17-1	Second.
3303	Md. Shamsuddin (V) ..	19-2	First.
3305	Ram Nandan Prosad Sinha	17-11	First.
3308	Ghani-Uzzaman (V) ..	16-9	Second.
3311	Lala Ramchandra Pd. Srivastaba ..	19-2	Third.
3313	Chandra Kishore Prasad ..	17-1	Second.
	St. James' College.		
4026	William Anthony Lobo ..	19-9	First.
	Calcutta Model Academy.		
4889	Sivaratan Sinha ..	17-11	Second.
4894	Sahadeo Sharma ..	17-4	First.

2. The undermentioned candidate, at the Examination for the Short Term Training Course for Teachers, held in April 1936, whose result was withheld from publication, is hereby declared to have passed :—

Goswami, Purnachandra.

B. B. DUTT,

Controller of Examinations.

Burdwan Division.

Chinsura, the 6th June 1936.

Applications are invited for admission into the panel of candidates for the posts of English teachers in Government High and Normal Schools and in Madrasahs as well as for the posts of Sub-Inspectors of Schools in the scale of Rs. 75—8/2—115—5/2—135—10/2—175 in the Subordinate Educational Service for the year 1936-37.

2. Only graduates preferably with an Honours degree, possessing a degree or diploma in teaching or first class M.A. or M.Sc. in *subjects useful for school work* shall be eligible for inclusion in the panel.

3. The candidates must not exceed 25 years of age on 1st August 1936 unless they have full two years' teaching experience or have worked as Sub-Inspector of Schools for two years. In that case the age-limit may be relaxed up to 30 years. They must be residents of the Burdwan Division and British subjects.

4. No candidate shall apply simultaneously to more than one Inspector of Schools.

5. The applications should be submitted in duplicate in the prescribed form as given below (schedule II) and be accompanied by the original Matriculation and other University certificates and diplomas as well as any other certificates relating to the attainments and character of the candidates.

6. Every candidate shall furnish certificates written not more than one year prior to the date of application from two responsible persons unconnected with his College or University and not related to him, testifying to his private character.

7. No person shall be eligible for appointment who is not of sound mind, good physique and active habits and free from organic defects.

8. No person shall be eligible for appointment who has endeavoured to enlist for his candidature the support of persons of influence or of officials of Government. Spontaneous recommendations from persons interested in, or otherwise known to, the candidate shall be disregarded.

9. The candidates whose names have already been empanelled are required to renew their application for retention of their names in the panel to be considered again, failing which their names will be automatically removed from the panel.

10. The applications will be received by the undersigned on or before 31st July 1936.

K. C. RAY,

Inspector of Schools, Burdwan Division.

Schedule II.

Education Department.

Forms of application for appointment to posts of English teacher and Sub-Inspector of Schools in the scale of Rs. 75—8/2—115—5/2—135—10/2—175 in the Subordinate Educational Service.

(1) Name of applicant and present address (in full).

(2) Permanent address in full.

(3) Date of birth and age last birthday.

(4) Place of birth and permanent residence.

(5) Nationality at birth, religion and caste.

(6) Father's name, place of birth and nationality at birth.

(7) Father's address and profession (if dead, give address at date of death).

(8) Mother's place of birth and nationality at birth.

(9) Name of school last attended before entering University, giving address, with dates of entering and leaving.

(10) Name of University and College. Give dates of entering and leaving, and dates of passing examinations. State subjects studied, degrees, honours or prizes obtained and class and position in the class obtained at all University and other public examinations.

(11) Name of the Training College attended. Give year and class of the B. T. degree and the subject in which you specialised during training.

(12) Give details of any original work. If published, copies of the publication should be attached.

(13) Give details of any teaching experience with dates, and names of institutions. Any testimonials as to your ability as a lecturer, teacher, etc., should be attached.

(14) Give names of games played—

(*a*) at school,

(*b*) at college, and

(*c*) after leaving the college.

State whether you have had experience in organising games.

(15) State whether you are a trained Scout Master if, so, what troops you have been in charge of and where.

(16) Name two persons of position (with address in full) who can, if necessary, testify to your character, and to accuracy of your statements.

(17) If the time since leaving the school is not fully accounted for by replies given above, account for the remainder here with dates.

(18) Are you free from pecuniary embarrassments ? If you are under liability to repay money advanced by an institution or party for your education, state the particulars.

(19) Have you ever been pronounced unfit at any time for Government employment by the Medical Board or any other duly constituted medical authority in Bengal ? What serious illness have you suffered from since leaving the school ?

(20) Have you appeared at any examination for Government service ? If so, state when and for what appointment. With what result?

(21) Have you previously been rejected for any appointment in Government service ? If so, when and for what reason ?

(22) Are you willing to be appointed to any post temporarily vacant ?

(23) Indicate the class of post you prefer, *i.e.*, an English teachership or Sub-Inspectorship or both.

(24) State here any facts not recorded above which should be mentioned as supporting you suitability for appointment.

(*Signature*) .....

(*Date*) .....

Dacca Division.

NOTIFICATION.

Dacca, the 6th July 1936.

Rules for the admission of private candidates to the Calcutta University Matriculation Examination, 1937.

1. A student who has not attended any school, recognized or unrecognized, for at least one year previous to the examination, will be treated as a private candidate. Teachers of schools are also considered as private candidates.

2. Private candidates who desire to sit for the ensuing University Matriculation Examination must appear at the Test Examination of any one of the undermentioned schools, to be held on the 1st December 1936 and the days following :—

(1) Dacca Collegiate School.

(2) Mymensingh Zilla School.

(3) Jamalpur Government High School.

(4) Faridpur Zilla School.

(5) Barisal Zilla School.

(6) Bhola Government High School.

(7) Jhalakati Government High School.

(8) Pirozpur Government High School.

3. Every private candidate must submit his application for admission to the Test Examination in the prescribed form on or before the 2nd November 1936 to the Inspector of Schools, Dacca Division. He must produce a certificate from a responsible Government officer to the effect (1) that he has not attended any school, recognized or unrecognized, for at least one year previous to the examination, (2) that his conduct and character have been good, (3) that he has diligently and regularly prosecuted his studies, and (4) that he has been subject to proper discipline.

Candidates who intend to appear at the Test Examination in the Dacca Collegiate School must submit their applications in duplicate.

A student, who failed to pass the annual examination for promotion to class X at the end of the session 1935 and then left the school will not be allowed to appear at the examination.

4. Every private candidate must also forward with his application his transfer certificate from the school (if any) in which he last read, or the Registrar's receipt (if he appeared at any previous Matriculation Examination).

Those who have never read in any school should produce either their horoscope or an affidavit sworn by their parents or guardians before a competent Magistrate declaring their age and a certificate from a respectable person with personal knowledge of the fact of the case that he has never been to any school.

5. Private candidates offering Hygiene as one of their subjects will be required to satisfy the Inspector of Schools that they have undergone a course of training in the subject. For this purpose they should submit along with their applications, certificates of training in it from a registered medical practitioner or from a recognised teacher in Hygiene.

6. Private candidates from outside the territorial jurisdiction of the Calcutta University including teachers of schools must obtain the sanction of the University to their migration before they are allowed to appear at the Test Examination for private candidates.

7. Teachers of schools recognised by the Calcutta or any other University or any Board of Secondary Education in India, who intend to appear at the Matriculation Examination as private candidates, are not required to pass the Test Examination. They should apply to the University for permission to appear at the Final Examination in proper time.

8. Every private candidate must pay a fee of Rs. 5 which should be remitted to the Inspector of Schools, Dacca Division, along with the application for admission to the Test Examination, on or before the prescribed date (2nd November 1936), after which a fine of Rs. 2 will have to be paid for each week's delay up to 16th November 1936. No application will be entertained after that date. *Where there are Treasuries or Sub-Treasuries near the residence of candidates the fee should be deposited there and chalans in duplicate showing the deposit submitted to the Inspector of Schools along with the application.* If the candidate be considered eligible for admission to the Test Examination a letter of permission will be issued. This should be shown to the Headmaster on the first day of examination. *In no circumstances will this fee be refunded.*

9. On the first date of examination, he must be accompanied, for the purpose of identification, by some person known to the officer conducting the examination, otherwise he will not be admitted to the Test Examination.

10. The Headmasters of the schools named above should send to this office, for orders, a statement, *in duplicate*, showing the marks gained by each private candidate in each subject at the Test Examination, *within a fortnight from the date of the said examination.* The application forms of candidates who are declared eligible should be forwarded to this office for countersignature, duly filled in and signed.

11. Private candidates allowed to go up for the Matriculation Examination should submit their fees to the Headmaster of the Government High School where they appear at the Test Examination at the time of filling up their application forms. The Headmaster will send the fees to the Controller of Examinations along with the applications countersigned by the Inspector of Schools so as to reach him on or before the date fixed by the University.

12. The Matriculation Examination will be held in March 1937. The dates will be notified by the Calcutta University.

Intermediate and B.A. Examinations, 1937.

Bona fide teachers of recognized English schools and inspecting officers of the Education Department, who have been employed as such for at least three academical years (32 calendar months) preceding the dates of examinations, will be admitted to the I.A. and B.A. Examinations of the Calcutta University as non-collegiate students, provided they have obtained special permission of the Senate.

Demonstrators, Laboratory Assistants and Librarians of affiliated colleges are regarded as teachers.

2. Candidates who have obtained special permission of the Senate must submit their applications to this office for countersignature not later than the 2nd January 1937.

3. Candidates should carefully read the printed form of application and supply all the necessary information.

4. The following documents in original must accompany the application :—

(*a*) The letter from the Senate of the Calcutta University permitting the candidate to appear at the ensuing examination.

(*b*) The University certificate to show that the candidate has passed the next preceding examination.

(*c*) Registrar's receipt in the case of those who were admitted to the same examination in a previous year.

(*d*) Registrar's receipt to show that the candidate's name has been registered as a "University student." If his name has not already been registered, he should produce a Post Office receipt showing that the required fee of Rs. 2 has been remitted to the University to get his name registered.

(*e*) A certificate from the Secretary in the case of teachers, and from the immediate superiors in the case of others, showing (*i*) that he has been serving as such for three academical years (32 calendar months), (*ii*) that he has been diligently and regularly prosecuting his studies and (*iii*) that his character and conduct have been good.

5. The dates of I.A. and B.A. Examinations, 1937, will be notified by the Calcutta University in the *Calcutta Gazette* in due course.

6. Applications with the countersignature of the undersigned, together with the fees for the above examinations, must reach the office of the Controller of Examinations, Calcutta University, on or before the dates to be fixed by the University and must be sent to that office by the candidate himself direct.

ABUL HASHEM KHAN CHAUDHURI,
Inspector of Schools, Dacca Division.

Dacca Division.

Test Examination of private candidates for the Calcutta University Matriculation Examination, 1937.

(This application must reach the office of the Inspector of Schools, Dacca Division, on or before the 2nd November 1936.)

APPLICATION.

To the Inspector of Schools, Dacca Division, Ramna, Dacca.

Sir,

I request permission to present myself at the ensuing Test Examination of private candidates for the Matriculation Examination of 1937.

I enclose herewith the necessary certificates as required under the rules.

The fee of rupees five is remitted by postal money order./Treasury chalans, in duplicate, showing the deposit of the fee of Rs. 5 are enclosed herewith.

I am,

Sir,

Yours obediently,

Name.....

Date.....

Address.....

Particulars to be filled in by the candidates.

1. Name of candidate

2. Father's name

3. Residence

   Post office

   Village

   Police-station

   District

4. Date of birth and age on 1st March 1937.

5. Name of the school (if any) in which he last read and date of last attendance in the school.

6. Name of the Government school at which he intends to appear at the Test Examination.

7. Whether he appeared at the Matriculation Examination in any previous year.

8. Name of the centre at which he intends to appear at the Final Matriculation Examination.

9. Name of the second language.

10. Vernacular language.

11. Vernacular language from which translation is to be made into English in the first English Paper.

12. Additional subjects to be taken up :—

   (*i*) Additional Mathematics.

   (*ii*) Additional paper in classical language.

   (*iii*) History.

   (*iv*) Geography.

   (*v*) Elementary Mechanics.

N.B.—Any two of the additional subjects taken up are to be retained and the rest scored through.

Office of the Inspector of Schools, Burdwan Division.

Chinsura, the 8th June 1936.

Rules for the admission of Private Candidates to the Calcutta University Matriculation, Intermediate and B.A. Examinations, 1937.

I.—Matriculation Examination.

1. Private students are those who have not attended any recognised or unrecognised High English School for at least one year previous to the Matriculation Examination. The term "private students" also includes teachers of schools other than High Schools recognised by the Calcutta University.

Students who got plucked at the last annual examination of Class IX will not be admitted to the ensuing Test Examination.

2. Private candidates must appear at the Test Examination to be held on Tuesday, the 1st December 1936, and the following days at any of the Government High Schools in the districts of Hooghly, Howrah, Bankura and Birbhum or at the Bengal-Nagpur Railway Indian High School at Kharagpur or at the East Indian Railway High School at Asansol.

3. Applications for admission to the Test Examination must be supported by the following particulars :—

(*a*) Transfer certificate (in original) granted to the candidate by the Headmaster of the recognised school in which he last read, or an affidavit sworn by the guardian before a competent Court that the candidate has never attended any school.

In the case of a candidate who previously appeared at the Entrance or Matriculation Examination, the Registrar's or Controller's receipt (in original) for the fee paid.

(*b*) A documentary evidence (such as horoscope or an affidavit sworn by the guardian before a competent Court) regarding the age of the candidate who never attended any recognised school.

(*c*) A certificate from a respectable gentleman other than a relative to the effect that **the candidate has prosecuted a regular course of study and has been subject to proper discipline, and that he was not attached to any school since the last Matriculation Examination held in March 1936.** Detailed information is needed under this head. The person granting the certificate should state his social or professional position.

(*d*) In the case of school masters, a certificate of good conduct from the Secretary of the school in which the candidate is serving.

(*e*) In case of candidates whose migration has been sanctioned by the Calcutta University, the Registrar's letter communicating sanction **in original.**

(*f*) Names of subjects (including vernacular and additional subjects) in which the candidate wishes to be examined.

(*g*) Home address in full—Village or name of street, post-office, thana and district.

(*h*) Ordinary place of residence (address in full) ; and duration of residence.

(*i*) Father's name, as well as guardian's name, and address.

4. Each private candidate will have to pay a fee of Rs. 5, which should be remitted to the Inspector of Schools, Burdwan Division, Chinsura, along with his application for admission to the Test Examination by the **7th November 1936,** after which date a fine of Rs. 2 will have to be paid for each week's delay. No fee will be accepted after the 25th November 1936, even on payment of fine. **Under no circumstance will the admission fee be refunded.** No private candidate will be admitted to the Test Examination unless he is accompanied, for the purpose of identification, by some person known to the office of the Inspector of Schools, Burdwan Division, or to the staff of the school where he will appear. **Those who are not bona fide residents of the Burdwan Division will not be admitted to the Test Examination.**

5. **The fee for the Matriculation Examination should NOT be sent to this office.** It should be deposited with the Headmaster of the school where the candidate appeared at the Test Examination.

6. The Matriculation Examination for 1937 will be held on the dates as declared by the University.

II.—Intermediate and B.A. Examinations.

1. Subdivisional Inspectors of Schools, Sub-Inspectors of Schools and *bonâ fide* teachers of English schools, who have served as such for the full period of three academical years preceding the examinations, will be admitted to the abovementioned examinations.

2. Candidates for the Intermediate and B.A. Examinations must produce certificates of character and length of service from the Secretaries of their respective schools. Candidates for the B.A. Examination must forward with their applications their F.A. or I.A. certificates, and those for the Intermediate Examination their Entrance or Matriculation certificates. Candidates admitted to a former examination must produce the Registrar's receipt in addition.

3. Under section 19 of the Indian Universities Act, candidates for the Intermediate and B.A. Examinations are informed that their applications for admission to these examinations will not be considered unless they enclose with their applications to this office the sanction of the Senate to appear at the said examination. Candidates, who have applied for or have obtained the special permission of the Senate for the purpose, are required, under section 9, Chapter XV of the Revised Regulations dealing with the registration of University students, to apply at once to the Registrar for the registration of their names as University students. No person will be deemed a "University student" unless and until his name has been duly registered, and none but "University students" will be eligible for admission to any University examination other than the Matriculation.

4. The printed form of application should be carefully and correctly filled in and submitted to this office on or before the 20th December 1936 at the latest, together with other papers as mentioned in rules 2 and 3, after which no application will be received.

5. The dates of Intermediate and B.A. Examinations of 1937 may be obtained from the Controller of Examinations, Calcutta University.

K. C. RAY,

Inspector of Schools, Burdwan Division.

NOTIFICATION.

Test Examination of Private Candidates for the Matriculation Examination, 1937, in the Rajshahi Division.

1. Private students are those—(*a*) who never attended any recognised school previous to the Matriculation Examination they are going to sit for, and (*b*) who have attended schools but after leaving them waited till the time they would normally require to appear at the Matriculation Examination had they been students of some recognised schools. The period of non-attendance in any institution for at least one year prior to the Final Matriculation Examination is compulsory for such students.

The term "Private candidate" includes *bona fide* teachers of schools.

2. A test examination of private students will be held at the Government high, zilla and collegiate schools in the Rajshahi Division, on Wednesday, the 25th November 1936, and the six following days (one paper being held daily from 11 a.m. to 2 p.m.). Such candidates only as reside in any of the districts of the Rajshahi Division and Cooch Behar will be admitted to the examination.

3. Each private candidate will have to pay a fee of Rs. 5, which is to be remitted to the Inspector of Schools, Rajshahi Division, at Jalpaiguri, and not to the undersigned by name, so as to reach him on or before the 15th October 1936, along with an application for permission to appear at the test examination. Candidates applying after the prescribed date will have to pay a fine of Rs. 2 for each week's delay up to 5th November 1936, after which no application will be entertained. The candidates must decide definitely to enter for the examination before depositing their fees. The fees once deposited will not be refunded under any circumstances whatsoever. Regular receipts will be issued to candidates for any payment made by them in the shape of admission fees and fines.

4. Each application for permission to appear at the test examination must be accompained with an application in the printed form and the documents noted below :—

(*a*) The name of the school in which the candidate last studied.

(*b*) The transfer certificate (in original) granted to the candidate by the Head Master of the school in which he last read, or

(*c*) In the case of a candidate who previously appeared at the Matriculation Examination, the Controller's receipt (in original) for the fees paid.

(*d*) In the case of a candidate who has not attended any school (*i*) a certificate from his guardian to that effect, (*ii*) a certificate from a respectable gentleman as in rule (*f*), (*iii*) his horoscope or an affidavit sworn by his guardian before a 1st class Magistrate in support of his age, (*iv*) a declaration from his legal guardian to the effect that he did not join any political movement and is not under any orders of restriction or surveillance.

(*e*) A certificate from a Government servant in Certificate I in the application form to the effect that the candidate has prosecuted a regular course of study and has been subject to proper discipline, and that he has not read in any school since the last Matriculation Examination.

(*f*) In the case of a schoolmaster a certificate of good conduct from the Secretary of the school in which he is serving or from the District Inspector of Schools of the district concerned.

(*g*) Private candidates having Hygiene as their optional subject are required to produce certificate from a registered medical practitioner or from a recognised teacher in Hygiene to the effect that they have undergone a full course of training in it under them.

(*h*) *No action will be taken on any application which will come to this office in incomplete form.*

(*i*) No candidate who has not completed the age of 15 years on the first day of the month in which the Matriculation Examination is held shall be allowed to appear at it.

(*j*) A statement by the candidate giving the following facts :—

(1) Residence, giving the name of the village, post office and district clearly.

(2) Father's name.

(3) The name of the centre at which he intends to appear.

(4) Second language besides English.

(5) Vernacular language from which translation is to be made into English in English first paper.

(6) Which of the following subjects to be taken up :—

(*i*) Additional Mathematics.

(*ii*) Additional paper in the classical language.

(*iii*) History.

(*iv*) Geography.

(*v*) Elementary mechanics.

(*vi*) Hygiene.

5. The Inspector of Schools on being satisfied will issue a passport for admission to the test examination. No candidate will, however, be admitted unless he is identified to the satisfaction of the Head Master of the school at which he appears.

6. The Head Masters of the institutions named above should direct candidates who appear at their schools to fill up the application form for permission to appear at the Matriculation Examination in their presence. These applications will be forwarded to the office of the Inspector of Schools. The Inspector of Schools will then countersign the applications of those candidates who pass the test examination and forward them to the Head Masters concerned for transmission to the Registrar with the fees for the examination.

7. In no circumstances should the fee for the Matriculation Examination be sent to the Inspector's office. It should be sent to the Head Masters of the schools concerned where the candidates sat for the test examination for submission to the Controller together with the countersigned applications.

8. The Matriculation Examination will be held in March 1937, and the applications and fees must reach the office of the Controller on or before the date fixed by the University.

N.B.—A student who failed to pass the annual examination for promotion to class X at the end of the session of 1935 and then left the school can, under no circumstances, be allowed to appear at the examination.

Intermediate and B. A. Examinations.

1. District and Subdivisional Inspectors of Schools, Sub-Inspectors of Schools and *bona fide* masters of English schools, who have served as such for the full period of three academical years preceding the examinations, will be admitted to the abovenamed examinations.

2. Candidates for the Intermediate and B.A Examinations must produce certificates of character and length of service from the Secretaries of their respective schools. Candidates for the B.A. Examination must forward with their applications their I.A. or F.A. certificates, and those for the Intermediate Examination, their Entrance or Matriculation certificates. Those candidates who were admitted to a former examination must produce the Controller's receipt in addition.

3. Under section 19 of the Indian Universities Act, candidates for the Intermediate and B.A. Examinations are informed that their applications for admission to these examinations will not be considered unless they enclose with their applications to this office the sanction of the Senate to appear at the said examinations. Candidates who have applied for or have obtained the special permission of the Senate for the purpose are required, under section 9, Chapter XV of the Revised Regulations dealing with the registration of University students, to apply at once to the Registrar, for the registration of their names as "University students". No person will be deemed a "University student" unless and until his name has been duly registered, and none but "University students" will be eligible for admission to any University examination other than the Matriculation.

4. The printed form of application should be carefully and correctly filled in and submitted to this office on or before the 3rd January 1937, together with other papers mentioned in rules 2 and 3, after which no application will be received.

5. The examinations will be held on dates to be notified by the University. Application with the countersignature of the undersigned and fees for the examination must reach the office of the Controller on dates to be fixed by the University and must be sent to that office by the candidates direct.

P. C. MUKHERJEE,

Inspector of Schools, Rajshahi Division.

Test Examination of private Candidates for the Matriculation Examination, 1937.

(This application must reach the office of the Inspector of Schools, Rajshahi Division, on or before the 15th October 1936.)

APPLICATION.

To

THE INSPECTOR OF SCHOOLS,
RAJSHAHI DIVISION.

SIR,

I request permission to present myself at the ensuing Test Examination of the private candidates for the Matriculation Examination of 1937.

I beg to enclose herewith my Transfer certificate/Registrar's receipt.

The fee of rupees five is remitted by postal money-order.

I am,
Sir,
Yours obediently,

Dated.....

Name .....

Present address.....

C/o.....

Village and P. O.....

District.....

CERTIFICATE I.

(This certificate is to be signed by a *Government servant.*)

I certify (1) that the abovenamed candidate.....has not attended any school, recognised or unrecognised, for at least one year previous to the ensuing Matriculation Examination, (2) that he has regularly and diligently prosecuted his studies, (3) that he has been subject to proper discipline and bears a good moral character.

(Signature).....

Designation.....

Date.....

CERTIFICATE II.

(In case of schoolmasters only.)

I certify that Babu..... ...has been serving in.....School for..... years and bears a good moral character.

Secretary to the.....

.....

District Inspector of Schools,

.....District.

Dated.....

Particulars to be filled in by the candidate.

1. Name of candidate.....

.....

2. Father's name.....

.....

3. Caste or creed.....

4. Residence—

Village.....

Post office.....

District.....

5. Age of the candidate on the 1st March 1937.....

6. Name of school in which the candidate last studied .....

.....

7. The name of the centre at which he intends to appear at the Final Matriculation Examination .....

.....

8. The name of the centre at which he intends to appear at the Test Examination .....

9. Vernacular language from which the translation is to be made into English in the English first paper.....

.....

10. Name of the classical language to be taken as the third subject.....

.....

11. Name of the vernacular language to be taken as the fourth subject.....

....

12. Additional subjects to be taken up—

(*i*) Additional Mathematics.

(*ii*) Additional paper in the classical language.

(*iii*) History.

(*iv*) Geography.

(*v*) Elementary mechanics.

(*vi*) Hygiene.

N. B. Any two of the additional subjects are to be retained and the others to be scratched.

Board of Apprenticeship Training.

The 13th July 1936.

Apprenticeship Admission Examination— June 1936.

Results of the Admission Examination of the Board of Apprenticeship Training, held in June 1936, are as follows :

In order of merit.	Roll No.	Name.	Age on the 1st June 1936. Y.	M.
		FIRST CLASS.		
1	6	Gomatam Srinivasan	18	0
2	21	Sambhunath Gupta	17	6
3	40	Patrick William Joseph Beale	17	3
4	24	Sarada Kumar Dutta	18	3
5	11	Gurbax Singh	18	3
6	1	George Edwin Antony Morris	17	10
	105	Birendra Kishore Chakravarty	18	5
8	2	George Alexander Webster	18	4
9	110	Edward Lamb	18	7½
10	18	Charles H. M. Gonsalves	18	5
11	47	Nirmal Kumar Maitra	17	3
12	9	Terence Dudley Stoutt	17	1
13	90	Ram Narayan Day	17	4
14	48	Asoke Ghose	18	4
		SECOND CLASS.		
15	102	Santosh Kumar Raha	18	5
16	12	Devpal Bhalla	17	7
17	54	Mrityunjoy Banerjee	18	8
18	55	P. Ganpat Rao Kelkar	18	7
19	49	P. A. Rajagopalan	18	3
20	112	Gopi Nath Kundu	18	5
	13	Biswanath Lahiri	18	3
22	118	Basil Harold Gomez	17	9
23	34	Ajit Krishna Chatterjee	18	5
24	82	Arabinda Sen Gupta	17	3
25	35	Pashupati Nath Sen	18	5

The names of the *overage* candidates, who passed the Board of Apprenticeship Training Admission Examination held in June 1936, are given below :—

In order of merit.	Roll No.	Name.
		FIRST CLASS PASS.
1	20	S. Venkataramanan.
2	52	Surendra Nath Basu.
3	122	Alexander Antony Rodriques.
4	23	Ronald H. I. Peacock.
		SECOND CLASS PASS.
5	124	Denis D'Silva.
6	125	Sib Das Choudhuri.

E. J. HOGBEN, *Secy.*,

Board of Apprenticeship Training.

Office of the Inspector of Schools, Presidency Division.

40/1A, Free School Street, Calcutta, the 13th July 1936.

NOTIFICATION.

Rules for the guidance of the private candidates for the Test Examination for admission to the Matriculation Examination for 1937.

A Test Examination of private candidates for permission to appear at the Matriculation Examination of the Calcutta University to be held in March 1937, will be held in the Senate Hall, Calcutta, or at any other place, which may be notified hereafter from Thursday, the 26th November 1936, according to the programme annexed hereto.

2. Applications for permission to appear at the Test Examination of private candidates should be made in printed forms only to be obtained *in person* from the office of the Inspector of Schools, Presidency Division. Candidates desirous of appearing at a muffasil centre should obtain forms from the Head Master of the Government School concerned.

3. Private candidates are those who have not attended any school, recognised or unrecognised, imparting general education for at least one year previous to the Matriculation Examination.

4. Private candidates are broadly divided into two groups, viz.—

(A) Candidates coming from within the territorial jurisdiction of the Calcutta University.

(B) Candidates coming from outside the territorial jurisdiction of the Calcutta University who have resided for one year or more in Calcutta or in one of the districts of the Presidency Division.

5. Each of these groups is again subdivided into the following four classes :—

(*i*) Candidates who once read at schools but since leaving them will have been out of school for at least one year up till 1st March 1937.

(*ii*) Candidates who have never read at any school.

(*iii*) *Bona-fide* teachers employed at schools recognised by any University or any Board of Secondary Education.

(*iv*) Teachers employed in other schools, *e.g.*, Primary Schools, Middle Schools, Junior Madrasahs, etc.

6. Every candidate for the Test Examination must produce—

(*a*) An affidavit in the appended form A sworn before a competent authority in Bengal by the candidate's father or his legal guardian (if the father is dead) Two copies of the candidate's photo, one affixed to the affidavit which should be duly attested by the swearer of the affidavit and the Magistrate and the other to be affixed to the application duly attested by the candidate and his father and guardian.

(*b*) If he had previously attended any school a transfer certificate (bearing the school stamp) from the school in which he last read or the admit card if he failed at the last or any previous Matriculation Examination or the Test Examination held by the Inspector of Schools, Presidency Division.

7. Candidates under class (*iii*) of rule 5 are exempt from appearing at the Test Examination. They should apply to the Registrar, Calcutta University, for necessary permission in accordance with the procedure laid down in his Notification No. 283/OUP, dated 15th May 1935.

8. Besides fulfilling the appropriate conditions as laid down for the foregoing three classes a candidate under class (*iv*) of rule 5 must produce a certificate of employment duly signed or countersigned by the District Inspector of Schools of the district.

9. *B group candidates* (*vide* rule 4) *whether ever read in any school or not, shall in addition produce* (*i*) *necessary permission from the University of Calcutta* commonly called migration certificate in terms of its circular No. S/272/O.U.Pri., dated the 16th June 1934, published at page 938, Part IB of the *Calcutta Gazette*, dated the 19th July 1934.

10. Every candidate must attach to his application a copy of the chalan showing the deposit of the prescribed fee at a treasury or sub-treasury in Bengal. (*See* also rule 15.)

11. No candidate under "group A" (*i.e.*, Bengali or Assamese), whose father or guardian is not a native or a permanent resident of or permanently employed in any district of the Presidency Division including Calcutta, will be admitted to the Test Examination to be held by or under orders of the Inspector of Schools, Presidency Division.

12. A student, who failed to pass the annual examination for promotion to class X at the end of the year 1935 and then left school, will, in no circumstances, be allowed to appear at the Test Examination of 1936. But a student who failed to pass the Matriculation Examination of the Calcutta University, held in March 1936 will be admitted to the ensuing Test Examination.

13. No candidate who has not completed the period required for reaching class X calculated from the date of his leaving the school and completing one year thereafter will be admitted to the Test Examination.

14. Any candidate desirous of taking up Hygiene for the Matriculation Examination shall submit along with his application a certificate from a registered medical practitioner or a recognised teacher of Hygiene to the effect that the candidate has been undergoing training in that subject under him. The registered medical practitioner should give his registration number for his identification.

15. The admission fee for the examination is Rs. 6 for each candidate to be examined in Calcutta and Rs. 5 for candidates to be examined in other centres. The fee for examination must be deposited into a Government Treasury or Subtreasury in Bengal and the chalan showing the deposit attached to the application (*vide* rule 10). No money order or cheque will be received in this office in payment of fees for the Test Examination. *In no circumstances will this admission fee be refunded.*

16. Admission cards for the Test Examination will be sent *by post.*

17. (*a*) Candidates residing in or within easy reach of Calcutta must appear at the Calcutta Examination centre.

(*b*) Those who reside at out-of-the-way places may, as a special case, be permitted to sit for the Test Examination at the nearest Government High English Schools. Applications from such candidates must be submitted through the head masters of the nearest Government High Schools. *They must, however, fulfil all the requisite conditions laid down in the foregoing rules.* The permission will only be granted if the head masters concerned recommend their cases.

Admission cards of these candidates will be distributed by the respective head masters.

18. The results of the Test Examination will be declared and put up on the notice board of this office on the 4th January 1937.

19. Application forms with forms for depositing fees at the Imperial Bank of India for permission to appear at the Matriculation Examination to be held in March 1937 will be given to and received back from the successful candidates of the Test Examination on the following dates arranged according to their roll numbers at the Test Examination :—

7th January—Roll Nos. 1—200.

8th January—Roll Nos. 201—400.

9th January—Roll Nos. 401—600.

11th January—Roll Nos. 601—800.

12th January—Roll Nos. 801—1000 and above.

Such application form will have to be signed by each successful candidate in the presence of an officer attached to this office.

20. The application form countersigned by this office will be returned to the candidates personally on the following dates :—

14th January—Test Roll Nos. 1—350.

15th January—Test Roll Nos. 351—700.

16th January—Test Roll Nos. 701 and above.

21. Candidates allowed to appear at the Matriculation Examination on passing the Test Examination shall deposit their fees at the Imperial Bank of India on or before 13th Jaunary 1937 and a copy of receipt showing the deposit shall be attached to the application.

22. The dates for distribution of University admission cards for the Matriculation Examination will be notified in the office notice board on or about the 24th February 1937. *The admission cards on no account will be sent to candidates by post.* The candidates must produce their admission cards for Test Examination as well as the University receipts showing the deposit of fees to obtain the University admission cards.

23. Candidates successful at the University examination may receive their Matric Pass Certificate on or about the 15th January 1938 but in no case later than the 15th of April 1938 on tending personally or by agent the University admission card. All undistributed certificates will be returned to the Controller of Examinations on the 15th April 1938.

24. Incomplete applications for the Test Examination will be rejected without any reference to the candidates. They should therefore see that complete particulars and documents are furnished. Applications must bear the signatures of the candidates in full. Those which will contain any initial will be rejected.

25. Applications in the prescribed form must reach the office of the Inspector of Schools, Presidency Division, on or before the 31st August 1936.

26. No paper either the application or any of its enclosures will be returned to the candidate after the examination is over.

M. A. JAAFAR,

Inspector of Schools, Presidency Division.

Programme of Test Examination.

Thursday, 26th November—

Morning, 10-30 a.m. to 1 p.m.—English, 1st paper.

Afternoon 2 p.m. to 4-30 p.m.—English, 2nd paper.

Friday, 27th November—

Morning, 10-30 a.m. to 1 p.m.—Compulsory Mathematics.

Afternoon, 2 p.m. to 4-30 p.m.—Vernacular language.

Saturday, 28th November—

Morning, 10-30 a.m. to 1 p.m.—Compulsory Classical language.

Afternoon, 2 p.m. to 4-30 p.m.—Additional Classical language.

Monday, 30th November—

Morning, 10-30 a.m. to 1 p.m.—History.

Afternoon, 2 p.m. to 4-30 p.m.—Additional Mathematics.

Tuesday, 1st December—

Morning, 10-30 a.m. to 1 p.m.—Geography.

Afternoon, 2 p.m. to 4-30 p.m.—Mechanics.

Wednesday, 2nd December—

Morning, 10-30 a.m. to 1 p.m.—Hygiene.

Appendix A.

I.....son of.....an inhabitant of village.....thana.....district.... and now residing at.....by caste..... by profession or occupation.....do hereby solemnly declare—

(1) that.....whose photo is affixed hereto below duly attested is my son/is a son of late.....and a.....of mine and I am his legal guardian.

(2) That he has been residing in Calcutta/at .....district.....since.....

(3) That he is a candidate for the Test Examination of the private candidates to be held by the Inspector of Schools, Presidency Division, for the Matriculation Examination of 1937.

(4) That to my best knowledge and information he was born on.....of 13 B.S. corresponding to.....of the Christian era; his age on 1st March 1937 being calculated to be ..... years.....months.

(5) That he has never read in any school recognised or unrecognised by any University or the Board of Secondary Education or the Education Department of Government since his childhood/since his leaving.....school or appearing at the Matriculation Examination as shown by the Transfer Certificate/Admission card enclosed with the application.

(6) That he has been subject to proper tuition and discipline all along and has made satisfactory progress in studies.

(7) That he bears a good moral character and his conduct is satisfactory.

(8) That the above statements are true to my best knowledge and information.

Appendix B.

Presidency Division.

Test Examination of private candidates for the Matriculation Examination, 1937.

(This application must reach the office of the Inspector of Schools, Presidency Division, on or before the 31st August 1936, after which on no account it will be accepted.)

APPLICATION.

To the Inspector of Schools, Presidency Division.

Sir,

I request permission to present myself at the ensuing Test Examination of the private candidates for the Matriculation Examination of 1937.

I enclose herewith the following papers as required under the rules :—

(*here enumerate the documents attached.*)

I am,

Sir,

Yours obediently,

(*Signature of the applicant.*).....

Present address (in full).....

I declare that the annexed particulars are true, that I am a permanent resident of the Presidency Division/permanently employed in the Presidency Division as.....

(*Signature*).....

Father or legal guardian (if father is dead)

Address.....

Particulars to be filled in by the candidate.

1. Name of candidate.....

2. (*a*) Father's name.....

   (*b*) If father is dead, then also legal guardian's name with relationship .....

3. Caste or religion, nationality.....

4. Permanent residence.....

   (*a*) Village or street.....

   (*b*) Post Office or town.....

   (*c*) District.....

5. Period of stay at the present address.

6. Age of the candidate on the 1st March 1937 and date of birth.....

7. (*a*) Name of the school a lass in which the candidate last studied.....

(*b*) Whether recognised or not at the time of the candidate's attendance.....

8. Date of last attendance in the school whether recognised or unrecognised.....

9. The name of centre at which he intends to appear at the Test Examination.....

10. Name of vernacular for translation (*a*) from and (*b*) to (any of the following) :—

Urdu, Bengali, Hindi.

11. Name of the compulsory second language (any of the following) :—

Arabic, Persian, Sanskrit, Pali, Urdu, Bengali, Hindi.

12. Name of compulsory vernacular (any of the following) :—

Urdu, Bengali, Hindi.

13. Additional subjects to be taken up (any two of the following) :—

(*i*) Additional Mathematics.

(*ii*) Additional paper in a classical language.

(*iii*) History.

(*iv*) Geography.

(*v*) Elementary Mechanics.

(*vi*) Hygiene. (State whether the requisite certificate from a Registered Medical Practitioner or a recognised Teacher of Hygiene is attached) (*vide* rule 14).

N.B.—In items Nos. to the subject or subjects the candidate desires to take up should be retained and the rest scored through. If the vernacular of a candidate is a language not included in the above list he shall have alternative questions in the place of translation in English, 1st paper, and an alternative paper in English Composition for the vernacular (compulsory) paper.

Answers in History, Geography or Hygiene in a script other than English and Bengali will not be accepted at the Test Examination. Non-Bengali candidates must therefore give answers to questions in these papers in English if they are not familiar with Bengali.

No subjects other than those mentioned above will be admissible for examination.

14. The name of the centre at which he intends to appear at the Matric Examination.....
.....

Calcutta University.

Senate House, the 23rd July 1936.

ERRATA LIST.

1. In the list of successful candidates at the B.A. Examination, 1936, published in the *Calcutta Gazette*, dated the 25th June 1936 :—

(*a*) *on page 1067, for*

"5 Basu, Jyotirmay .. Vidyasagar College"

please read

"5 Basu, Jyotirmayi .. Vidyasagar College";

(*b*) *on page 1092, for*

"Sen, Binayendranath .. Non-collegiate student (Roll Bur. N. 27)"

please read

"Sen, Binayendranath .. Non-collegiate student (Roll. Ber. N. 27)."

2. In the list of successful candidates at the I. A. Examination, 1936, published in the *Calcutta Gazette*, dated the 28th May 1936, on page 675 :—

for

"Bhattacharyya, Ranesranjan .. Sylhet M. C. College"

please read

"Bhattacharyya, Rakesranjan .. Sylhet M. C. College".

3. In the list of successful candidates at the I.Sc. Examination, 1936, published in the *Calcutta Gazette*, dated the 21st May 1936, on page 569 :—

for

"Azizur Rahman Choudhury .. Presidency College"

please read

"Azizur Rahman Chowdhury .. Presidency College."

4. In the list of successful candidates at the Matriculation Examination, 1936, published in the *Calcutta Gazette*, dated the 18th June 1936 :—

(*a*) *on page 900, for*

"Cal. 4361 Prabodhchandra De .. 17-11 Second"

please read

"Cal. 4361 Prabodhchandra Ray .. 17-11 Second";

(*b*) *on page 908, for*

"Cal. P.759 Nirendrabikas Dasgupta .. 19 First"

please read

"Cal. P. 759 Nirendubikas Dasgupta .. 19 First";

(*c*) *on page 950, for*

"Chi. 58 Bhubendubikas Chaudhuri (MnMc) 16-8 First"

please read

"Chi. 58 Bhabendubikas Chaudhuri (MnMc) 16-8 First";

(*d*) *on page 952, for*

"Chi. 543 Sachindrabhushan Sen .. 18-2 Second"

please read

"Chi. 543 Sailendrabhushan Sen .. 18-2 Second";

(*e*) *on page 980, for*

"Khu. 316 Silaranjan Mukhopadhyay .. 14-11 First"

please read

"Khu. 316 Sibranjan Mukhopadhyay .. 14-11 First";

(*f*) *on page 997, for*

"Net. 43 Sureschandra Bhaumik .. 16-2 First"

please read

"Net. 43 Sureschandra Bhaumik (m) .. 16-2 First";

(*g*) *on page 953, the name of the school*

"Pomara S. R. S. H. E. School"

should be read as

"South Raozan Sarafvatte H. E. School."

B. B. DUTT,
Controller of Examinations.

Office of the Director of Public Instruction, Bengal.

NOTIFICATION.

Calcutta, the 15th July 1936.

The undermentioned candidates are awarded Research Scholarships of the value of Rs. 75 a month each for one year, with effect from 1st July 1936 :—

	Name of scholar.	Subject of Research.	Place of work.
1	Dr. Durga Das Mitra	Nutrition, with special reference to the subject of Malnutrition and its possible causes and remedies.	All-India Institute of Hygiene and Public Health, Calcutta.
2	Mahamed Nural Karim	Indo-Muslim History, with special reference to the subject of Shah Shuja's administration in Bengal.	Dacca University.
3	Krishnachandra Lahiri	Contemporary English Literature, with special reference to the subject of the influence of modern Sociology and Psychology on literature.	Calcutta University.
4	Girija Shankar Ghar	Philosophy, with special reference to the subject of the Philosophy of the Tantras.	Calcutta University.

J. M. BOTTOMLEY,
Director of Public Instruction, Bengal.

Calcutta University.

NOTICE.

Senate House, the 13th July 1936.

The heads of all High Schools are informed that schools seeking recognition for the first time should submit their applications on or before the 15th of January, and those seeking recognition in special subjects, *e.g.*, Geography, Mechanics or Hygiene, on or before the 30th of June preceding the year from which such recognition is sought.

J. CHAKRAVORTI, *Registrar.*

Calcutta University.

Senate House, the 13th July 1936.

NOTICE.

The next Diploma in Spoken English Examination will be held on Monday, the 28th September 1936, and application and fee for admission to the same must reach the office of the Controller of Examinations on or before Friday, the 31st July 1936.

B. B. DUTT,
Controller of Examinations.

Registered No. C207

The Calcutta Gazette

THURSDAY, JULY 23, 1936.

PART II

Advertisements.

Notices

Advertisements, Notices, etc., intended for insertion in this part of the Gazette must be sent to Press before 12 noon on Saturday, and all costs deposited and proofs returned by 4 p.m. on Monday. Manuscripts and postal remittances must be addressed to Superintendent, Government Printing (Publication Branch), Bengal Government Press, Alipore.

For the convenience of advertisers located in Calcutta, arrangements have been made to accept advertisements and prepayment of charges Sales Office, Ground Floor, Writers' Buildings, Calcutta. The latest time for receipt of advertisements for current week's Gazette has been extended till 4 p.m. on Mondays.

NOTIFICATION OF SALE.

In the Court of the Munsif at Balurghat (Dinajpur).

MONEY EXECUTION SUIT No. 181 OF 1936.

Dinajpur Hitaisi Bank, Ltd., decree-holder,

versus

Chandra Nath Chatterjee, judgment-debtor.

NOTICE is hereby given to all intending purchasers that the property noted below will be sold in public auction in the Court precincts of the Munsif of Balurghat on the 7th September 1936 at 12 noon for realisation of claim of decree-holder for Rs. 894-11 :—

Description of property.

In the district of Dinajpur, tauzi No. 271, Lot Raishali, police-station Balurghat, pargana Kharail, the following 37 mauzas in judgment-debtor's 16 annas zemindari right, title and possession, but interest described in the D Register of Collectorate as 3 annas and the above interest is subject to mortgage to Fatteh Chand and others of Dinajpur town :—

Mauzas under Balurghat police-station.

(1) Chandpur, (2) Kharail, (3) Durganula, (4) Jallai, (5) Khalni, (6) Jhanbari, (7) Chak Kriparam, (8) Chak Dayal, (9) Chanso, (10) Chakgangaram, (11) Amrulbari, (12) Dharmapur, (13) Dilpachanda, (14) Chakkalu, (15) Shibpur, (16) Mallikpur, (17) Poranpadhail, (18) Saidpur, (19) Shenrol Bujruk, (20) Shankair, (21) Shekpara, (22) Kharikadanga, (23) Narayanpur (24) Mahala, (25) Mahana Khardo, (26) Gramtala, (27) Chakbalut, (28) Naltahar, (29) Govindapur, (30) Chakraghunath, (31) Chak Janaki,

Mauzas under Patnitala police-station.

(32) Kaibartakhanda, (33) Kaibartakhanda,

Mauzas under Gangarampur police-station.

(34) Basail, (35) Nilahari, (36) Mahanaj, (37) Chakgopal.

R. K. DUTTA GUPTA, Munsif.

Balurghat, the 13th July 1936. (1458—1)

In the High Court of Judicature at Fort William in Bengal, in insolvency.

NOTICE OF ADJUDICATION ORDER.

No. 91 of 1936.

Re Mrs. Elizabeth Church Crouch, lately residing at No. 33-1, Corporation Street, and at present residing at No. 50, Wellesley Street, in the town of Calcutta, lately a supplier of outdoor meals, at present without any occupation, ex parte the debtor.

Basu & Co., debtor's solicitors.

ON the 13th day of July 1936, an order was made by the High Court of Judicature at Fort William in Bengal in its insolvency jurisdiction adjudging the abovenamed as an insolvent.

Note.—All debts due to the estate should be paid to me.

Dated this 16th day of July 1936.

G. M. FALKNER, Official Assignee.

In the High Court of Judicature at Fort William in Bengal, in insolvency.

NOTICE OF ADJUDICATION ORDER.

No. 92 of 1936.

Re Purna Chandra Mahindar and Jatindra Nath Mahindar, both residing at No. 50, Strand Road, in the town of Calcutta, and carrying on co-partnership business as dealers in miscellaneous goods at the said premises at No. 50, Strand Road, in Calcutta aforesaid, under the name and style of Purna Chandra Mahindar Jatindra Nath Mahindar, ex parte the debtors.

Satya Hari Datta, debtors' solicitor.

ON the 13th day of July 1936, an order was made by the High Court of Judicature at Fort William in Bengal in its insolvency jurisdiction adjudging the abovenamed as insolvents.

Note.—All debts due to the estate should be paid to me.

Dated this 16th day of July 1936.

G. M. FALKNER, Official Assignee.

In the High Court of Judicature at Fort William in Bengal, in insolvency.

NOTICE OF ADJUDICATION ORDER.

No. 94 of 1936.

Re Obadiah Mordecai Obadiah, residing at No. 16, David Joseph Lane, in the town of Calcutta, lately used to take houses on lease for sub-letting them, at present of no occupation, ex parte the debtor.

F. C. Kar, debtor's solicitor.

ON the 14th day of July 1936, an order was made by the High Court of Judicature at Fort William in Bengal in its insolvency jurisdiction adjudging the abovenamed as an insolvent.

Note.—All debts due to the estate should be paid to me.

Dated this 16th day of July 1936.

G. M. FALKNER, Official Assignee.

In the High Court of Judicature at Fort William in Bengal, in insolvency.

No. 1 of 1932.

Re Champalal Domani.

NOTICE is hereby given that a dividend is intended to be declared in the above estate. Persons claiming to be creditors in the above estate are required to file their claims supported by affidavit and vouchers on or before the 15th August 1936, after which date no claims received by the undersigned will be considered.

Persons who have already filed their claims need not lodge fresh claims.

A form of proof of debt may be had on application from the undersigned.

G. M. FALKNER, Official Assignee.

17, Old Post Office Street, Calcutta, the 15th July 1936.

(1464—1)

In the Court of the District Judge of Bankura.

INSOLVENCY CASE No. 2 OF 1934.

Sarat Chandra Bagdi, son of late Gura Chand Bagdi, of Lalbazar, Bankura, district Bankura, insolvent.

NOTICE is hereby given to his creditors that the abovenamed insolvent has been finally discharged from insolvency by order of this Court, dated the 16th May 1936.

S. K. GANGULI, District Judge.

Bankura, the 15th July 1936. (1465—1)

ORDER ANNULLING ADJUDICATION.

Section 43 of the Provincial Insolvency Act, V of 1920.

In the Court of the District Judge at Chittagong.

INSOLVENCY APPLICATION No. 3 OF 1932.

Ram Chandra Chakraborty, son of late Kali Kinkar Chakraborty, of Alampur, police-station Patiya, district Chittagong, debtor, applicant.

ON reading Receiver's report and hearing pleader, it is ordered that the order of adjudication, dated 15th December 1932, against debtor Ram Chandra Chakraborty of Alampur, be and the same is hereby annulled.

Dated this 13th day of June 1936.

H. G. WAIGHT, District Judge.

(1473—1)

ORDER OF ADJUDICATION.

Section 27 of the Provincial Insolvency Act, V of 1920.

In the Court of the District Judge at Chittagong.

INSOLVENCY APPLICATION No. 5 OF 1936.

PURSUANT to a petition, dated 23rd January 1936, by two debtors (1) Imam Ali and (2) Md. Ibrahim, sons of Hajee Dewan Ali, of village Bakalia, police-station Panchlaish, post office Chawkbazar, district Chittagong, and on the application of debtors themselves and on reading application and hearing pleader, it is ordered that the debtors be and the said debtors are hereby adjudged insolvents. They are to apply for discharge by 18th June 1937. Their petition is set down for hearing for 19th July 1937. Babu Hemendra Nath Datta is appointed Receiver.

Dated this 18th day of June 1936.

H. G. WAIGHT, District Judge.

(1474—1)

ORDER OF ADJUDICATION.

Section 27 of the Provincial Insolvency Act, V of 1920.

In the Court of the District Judge at Chittagong.

INSOLVENCY APPLICATION No. 9 OF 1936.

PURSUANT to a petition, dated 19th February 1936, by debtor Ali Hossain, son of Md. Ajoo, of Chandgao, police-station Panchlaish, district Chittagong, and on the application of debtor himself and on reading application and hearing pleader, it is ordered that the debtor be and the said debtor is hereby adjudged insolvent.

It is further ordered that the debtor do apply for his discharge before 22nd December 1936. His petition will be heard on 22nd January 1937.

Dated this 22nd day of June 1936.

H. G. WAIGHT, District Judge.

(1475—1)

NOTICE TO CREDITORS OF THE DATE OF HEARING OF AN INSOLVENCY PETITION.

Section 19 of the Provincial Insolvency Act, V of 1920.

In the Court of the District Judge at Chittagong.

INSOLVENCY APPLICATION No. 22 OF 1936.

WHEREAS debtors Durga Prasad Roy and Kali Prasad Roy, sons of late Uma Charan Roy, of village Noapara, police-station Raozan, district Chittagong, have applied to this Court by a petition, dated 22nd day of June 1936, to be declared insolvents under the Provincial Insolvency Act, V of 1920, this is to give notice that the Court has fixed the 11th day of August 1936 for the hearing of the aforesaid petition and the examination of the debtors.

J. GEORGE, *for* District Judge.

(1476—1)

NOTICE TO CREDITORS OF APPLICATION FOR DISCHARGE.

Section 41(1) of the Provincial Insolvency Act, V of 1920.

In the Court of the District Judge at Chittagong.

INSOLVENCY CASE No. 17 OF 1932.

Amir Ali, son of Jafar Ali, of Immamollarchar, police-station Boalkhali, district Chittagong, debtor, applicant.

TAKE notice that the abovenamed insolvent has applied at the Court for his discharge, and that the Court has fixed the 18th day of August 1936, at 10-30 o'clock, for hearing the application.

Dated this 13th day of July 1936.

H. G. WAIGHT, District Judge.

(1477—1)

ORDER OF ADJUDICATION.

Section 27 of the Provincial Insolvency Act, V of 1920.

In the Court of the District Judge at Chittagong.

INSOLVENCY APPLICATION No. 10 OF 1936.

PURSUANT to a petition, dated the 20th February 1936, filed by the debtor Peary Mohan Banik, son of Dhananjay Banik, of Paindong, police-station Fatickchery, district Chittagong, and on the application of debtor himself and on reading application and hearing pleader, it is ordered that the debtor be and the said debtor is hereby adjudged insolvent.

It is further ordered that the debtor do apply for his discharge within one year from this date—on or before 24th June 1937 to 24th July 1937 for hearing. Babu Hemendra Nath Dutta is appointed Receiver.

Dated this 24th day of June 1936.

H. G. WAIGHT, District Judge.

(1483—1)

NOTICE TO CREDITORS OF APPLICATION FOR DISCHARGE.

Section 41 (*1*) of the Provincial Insolvency Act, V of 1920.

In the Court of the District Judge at Dacca.

INSOLVENCY CASE No. 28 OF 1932.

Mohini Mohan Ghose, son of late Harihar Mohan Ghose, resident of Kurmitola, police-station Tejgaon, district Dacca, insolvent.

TAKE notice that the abovenamed insolvent has applied at the Court for his discharge, and that the Court has fixed the 25th day of August 1936 at 10 o'clock for hearing the application.

Dated this 13th day of July 1936.

W. McC. SHARPE, District Judge.

(1463—1)

In the Court of the District Judge of Faridpur.

INSOLVENCY CASE No. 76 OF 1936.

Kisori Mohan Moulik, son of late Abhoy Charan Moulik, of Fatejangapur, police-station Naria, district Faridpur, debtor-petitioner.

NOTICE is hereby given that the petitioner of the abovementioned case has applied to this Court for being adjudged insolvent and the 6th August 1936 has been fixed for the hearing of the application.

K. B. ROY, District Judge.

Faridpur, the 14th July 1936. (1460—1)

In the Court of the District Judge of Faridpur.

INSOLVENCY CASES Nos. 38 to 40 OF 1933.

(1) Bashiram Das, (2) Khepu Chandra *alias* Nanda Lal Das, (3) Nakul Chandra Das, sons of late Jajneswar Das, of Kalagachi, police-station Balakandi, district Faridpur, insolvents.

NOTICE is hereby given that the adjudication of the abovenamed insolvents has been annulled by an order of this Court, dated the 10th July 1936.

K. B. ROY, District Judge.

Faridpur, the 17th July 1936.

In the Court of the District Judge of Hooghly.

INSOLVENCY PETITION No. 12 OF 1936.

NOTICE is hereby given that Sachinandan Jana, son of late Gostha Behari Jana, of Utterpara, thana Utterpara, district Hooghly, was on the 4th July 1936 adjudged an insolvent. The 3rd October 1936 has been fixed for framing a schedule and creditors are required to prove their claims on that day.

S. SEN, District Judge.

Chinsura, the 7th July 1936. (1385—1)

In the Court of the District Judge of Hooghly.

INSOLVENCY PETITION No. 52 OF 1936.

NOTICE is hereby given that Santosh Kumar Pal, son of late Deb Narain Pal, of Utterpara, thana Utterpara, district Hooghly, was on the 16th May 1936 adjudged an insolvent. The 15th August 1936 has been fixed for framing a schedule and creditors are required to prove their claims on that day.

B. M. SINGH, District Judge.

Chinsura, the 16th July 1936. (1467—1)

In the Court of the District Judge of Hooghly.

INSOLVENCY PETITION No. 11 OF 1936.

NOTICE is hereby given that Jatindra Mohon Chatterji, son of late Sidheswar Chatterji, of Garhbari, thana Chinsura, district Hooghly, was on the 10th July 1936 adjudged an insolvent. The 10th October 1936 has been fixed for framing a schedule and creditors are required to prove their claims on that day.

B. M. SINGH, District Judge.

Chinsura, the 16th July 1936. (1468—1)

In the Court of the District Judge of Hooghly.

INSOLVENCY PETITION No. 5 OF 1936.

NOTICE is hereby given that Thakur Das Show, son of late Ram Kissen Show, of Bansberia, thana Mogra, district Hooghly, was on the 11th July 1936 adjudged an insolvent. The 10th October 1936 has been fixed for framing a schedule and creditors are required to prove their claims on that day.

B. M. SINGH, District Judge.

Chinsura, the 16th July 1936. (1469—1)

In the Court of the District Judge of Hooghly.

NOTICE is hereby given under clause (2) of section 12 of the Provincial Insolvency Act, V of 1920, to his creditors that the insolvency petition of Jotindra Mohon Chatterji, son of late Prosonno Kumar Chatterji, of Bandel, Naldanga, thana Chinsura, district Hooghly, has been admitted by this Court as No. 59 of 1936 and that the 15th August 1936 has been fixed for the hearing thereof.

B. M. SINGH, District Judge.

Chinsura, the 16th July 1936. (1470—1)

In the Court of the District Judge of Hooghly.

INSOLVENCY PETITION No. 35 OF 1935.

NOTICE is hereby given that Debendra Nath Gharui and Tez Ch. Gharui, sons of late Sarada Prosad Gharui, of Neota, thana Pursura, district Hooghly, were on the 26th May 1936 adjudged insolvents. The 29th August 1936 has been fixed for framing a schedule and creditors are required to prove their claims on that day.

B. M. SINGH, District Judge.

Chinsura, the 16th July 1936. (1472—1)

In the Court of the District Judge of Jessore.

INSOLVENCY CASE No. 10 OF 1936.

NOTICE is hereby given to the creditors that Giridhar Mukherjee, son of late Jadav Chandra Mukherjee, of village Kundashi, police-station Lohagara, district Jessore, filed a petition in this Court on 29th June 1936 for being adjudged an insolvent, and that the 8th August 1936 has been fixed for hearing of the said petition.

K. C. NAG, District Judge.

Jessore, the 15th July 1936. (1466—1)

In the Court of the District Judge of Mymensingh.

INSOLVENCY CASE No. 10 OF 1935.

ON the application of the insolvent Kishori Mohan Bhaumik, son of Krishna Chandra Bhaumik, of Doail, police-station Sarishabari, district Mymensingh, for an order of the final discharge the 24th day of July 1936 has been fixed for hearing the aforesaid petition and the examination of the insolvent.

S. M. MASIH, District Judge.

Mymensingh, the 11th July 1936. (1459—1)

In the Court of the District Judge of 24-Parganas.

INSOLVENCY CASE No. 24 OF 1936.

Purusattam of Sahapore, Behala, police-station Behala, 24-Parganas, applicant.

To Purusattam Kalidas & Co. of 13-1, Armenian Street, Calcutta, and others, creditors.

ON the 14th day of July 1936 it was ordered that the matter of the petition of the applicant be heard on the 17th day of August 1936, and that the said applicant do attend to be examined by this Court on that date.

T. H. ELLIS, District Judge.

Alipore, the 15th July 1936. (1480—1)

NOTICE TO CREDITORS OF APPLICATION FOR DISCHARGE.

Section 41(1) of the Provincial Insolvency Act, V of 1920.

In the Court of the District Judge at Alipore.

INSOLVENCY CASE No. 44 OF 1916.

Sahansha Bukt Israil Ali Mirza of Paharpore Road, Fatehpore, police-station Metiaburuz, 24-Parganas, applicant.

TAKE notice that the abovenamed insolvent has applied at the Court for his discharge, and that the Court has fixed the 10th day of August 1936 at 11 o'clock for hearing the application.

Dated this 15th day of July 1936.

T. H. ELLIS, District Judge.

(1481—1)

NOTICE TO CREDITORS OF APPLICATION FOR DISCHARGE.

Section 41(1) of the Provincial Insolvency Act, V of 1920.

In the Court of the District Judge at Alipore.

INSOLVENCY CASE No. 20 OF 1935.

Bamandas Halder of 12-1, Bhabanath Sen Street, police-station Chitpore, 24-Parganas, applicant.

TAKE notice that the abovenamed insolvent has applied at the Court for his discharge, and that the Court has fixed the 17th day of August 1936 at 11 o'clock for hearing the application.

Dated this 15th day of July 1936.

T. H. ELLIS, District Judge.

(1482—1)

APPLICATIONS for the post of Superintendent of my office will be received up to the 6th August 1936. Applicants who must be Ministerial Officers of Government already must state their age, permanent post, pay and office experience in their applications and enclose copies of all remarks recorded in their service books.

P. J. GRIFFITHS, Dy. Commr., Darjeeling.

Darjeeling, the 18th July 1936.

WANTED temporarily for six months with every prospect of being made permanent an experienced Head Clerk and Accountant for the office of the District Engineer of Pabna on a salary of Rs. 100—5—150 per month. None need apply who is not a passed accountant or a graduate in Commerce Examination under the rules. Preference will be given to those who have got previous experience in the District Engineer's office works or P. W. D. office works. Applications stating age, qualifications, past services, native village and district of the candidates with copies of certificates will be received by the undersigned up to the 30th July 1936. The selected candidate will have to join at once and will not get any joining travelling allowance.

A. R. MAHMOOD, Chairman, District Board.

Pabna, the 2nd July 1936. (1370—3)

THE Bengal and Madras Service Family Pension Fund which is provisionally managed and assisted by Government has for its object the provision of monthly pensions for the maintenance of the widows and children of subscribers and is open, with certain exceptions, to all active and pensioned members of the Uncovenanted service of Government (except those serving under the Government of Bombay), and to Local Fund servants earning pensions from Government. Some of the special features of the fund are (1) that widowed daughters incapable of re-marriage or children labouring under such mental or bodily infirmities as incapacitate them from earning their livelihood or preclude the possibility of marriage (in case of a daughter) are admitted to its benefits; and (2) that subscribers to the Widows and Daughters' branches are entitled to a refund of 30 per cent. of the premia paid, should the nominee predecease them after five years of admission. The second quinquennial valuation of the Fund has been completed by the Actuary to the Government of India, and his report discloses very favourable results. For forms of application and rules of the Fund apply to the Accountant-General, Bengal, Imperial Secretariat Buildings, Calcutta.

Imperial Bank of India.

THE following appointment on the Bank's Staff is hereby notified:—

Mr. S. S. Rachhpal to act as Superintendent, Branch Department, Local Head Office, Calcutta, as from the 12th July 1936, *vice* Mr. A. McInnes.

By order,

H. J. FITZ-PATRICK,
Secretary & Treasurer (offg.).

Calcutta, the 14th July 1936. (1461—1).

Notes.

PORTIONS of the following notes of the Calcutta circle of issue are stated to have been destroyed. Payment of their value has been claimed by the person whose name is placed against the numbers. Any other person claiming a right to them is warned to communicate at once with the undersigned.

Regtd. No.	No. of notes.	Value.	Name and address of the claimant.
		Rs.	
W. D. 11 of 36	S/68,153804 S/78,877252	100 100	Mr. Lajja Ram Gupta, B.A. LL.B., Pleader, Hissar, Punjab.

S. GUPTA, Currency Officer.

Calcutta, the 11th July 1936.

Note.

PORTION of the following note of the Calcutta circle of issue is stated to have been destroyed. Payment of its value has been claimed by the person whose name is placed against the number. Any other person claiming a right to it is warned to communicate at once with the undersigned :—

Regtd. No.	No. of the note.	Value.	Name and address of the claimant.
		Rs.	
W. D. 12 of 36	RE/56,40138	100	Mr. Sita Ram Paswan, c/o Babu Ramcharitra Prasad Sinha, Pleader, Topkhana Bazar, Monghyr.

S. GUPTA, Currency Officer.

Calcutta, the 13th July 1936.

In the matter of the Indian Companies Act, VII of 1913, and

In the matter of Kasimbazar Rice Mills, Ltd.

BY an order made by the High Court of Judicature at Fort William in Bengal in the above matter, dated the 8th day of June 1936, on the petition of Promotha Nath Mazumdar of Khagra, district Murshidabad, a shareholder of the abovenamed Company, it was ordered that the said Company should be wound up by this Court under the provisions of the Indian Companies Act, 1913.

Dated the 14th day of July 1936.

J. M. RAKSHIT,

Attorney for the said petitioner,

6, Old Post Office Street, Calcutta.

(1462—1)

In the matter of the Indian Companies Act, 1913, and

In the matter of the Nilphamari Luxmi Bank, Limited

(in voluntary liquidation).

AT an extraordinary general meeting of the members of the abovenamed Company duly convened and held at the office room of the Company on the 12th day of July 1936 the following extraordinary resolution was duly passed :—

"That it has been proved to the entire satisfaction of the meeting that the Company cannot, by reason of its liability, continue its business and that it is advisable to wind up voluntarily, and at the same meeting of the members, Babus Charu Chandra Ghosh, Haranath Biswas, Satis Chandra Bhattacherjee and Banka Behari Bose were appointed liquidators for the purpose of such winding up".

PRAFULLA KUMER BAGCHI, Chairman.

Nilphamari (Rangpur), the 12th July 1936. (1478—1)

In the matter of the Provident Insurance Societies Act, 1912, and

In the matter of Leading Insurance Company (in liquidation).

TAKE notice that I, the undersigned liquidator of the abovenamed Company, have fixed 29th day of July 1936 as the day on or before which the creditors of the Company are to prove their debts or claims, otherwise they will be excluded from the benefit of any distribution made before such debts are proved.

C. K. PAUL, Liquidator.

46-B, Amherst Street, Calcutta, the 14th July 1936.

(1457—1)

IN THE HIGH COURT OF JUDICATURE AT FORT WILLIAM IN BENGAL.

Ordinary Original Civil Jurisdiction.

In the matter of the Indian Companies Act, VII of 1913, and

In the matter of the Marangi Tea Company, Limited.

NOTICE is hereby given that a petition was on the 20th day of July 1936 presented to the abovenamed Court for an order under section 153 of the Indian Companies Act, 1913, sanctioning a scheme of arrangement proposed to be made between the members of the abovenamed Company and the said Company whereby the undertaking of the said Company is to be transferred to a Company incorporated or to be incorporated in England under the English Companies Act, 1929.

By an order, dated the 20th day of July 1936, made by the Honourable Mr. Justice Lort-Williams, the said petition is directed to be heard by the said Court at the Court House, Calcutta, on Monday, the 10th day of August 1936, at 11 a. m., or soon thereafter.

A copy of the said scheme of arrangemen, may be inspected at the office of the managing agents of the Company, Octavius Steel & Co., Ltd., 14, Old Court House Street, Calcutta, by any member or creditor of the Company.

Dated this 20th day of July 1936.

SANDERSONS & MORGANS,

Attorneys for the Company.

(1484—1)

NOTICE OF THE CREDITORS UNDER SECTION 209.

In the matter of the Indian Companies Act, 1913, and

In the matter of the Nilphamari Luxmi Bank, Limited (in voluntary liquidation).

WHEREAS at an extraordinary general meeting of the members of the Company duly convened and held at its office room on 12th July 1936 an extraordinary resolution for voluntarily winding up of the Company was passed and we were appointed liquidators, notice is hereby given to you as a creditor that a meeting of the creditors of the Company will be held on 2nd August 1936 at 7 a.m. at the office room of the Company to verify their deposits and to consider the appointment of the liquidators named below and any other matter or matters contemplated by the above section—you are requested to attend.

CHARU CHANDRA GHOSH, Pleader,
HARANATH BISWAS, Pleader,
SATIS CHANDRA BHATTACHERJEE, Pleader,
BANKA BEHARI BOSE, Pleader,
Liquidators.

Nilphamari (Rangpur), the 12th July 1936. (1479—1)

Imperial Library.

Secretariat Buildings, 6, Esplanade East, Calcutta

Open on—

Week days and Saturdays from 10 a.m. to 7 p.m.
Sundays and Gazetted holidays from 2 p.m. to 5 p.m.

THE Imperial Library is also a Lending Library. It is free to all except children. There is no subscription to pay.

K. M. ASADULLAH, Librarian.

CINCHONA FACTORY PRODUCTS.

By order of the Government of Bengal Cinchona Factory Products as manufactured and packed at the Cinchona Factory, Mungpoo, Darjeeling district, will be sold and distributed by the Superintendent of the **Presidency Jail,** *in original packages* as received from the Mungpoo Factory, at the rates herein noted **from the 1st May 1926 :—**

Name of drug.	Price per lb. in powder form. Taken at a time. For 60 lbs. and upwards.	For 6 lbs. and over but less than 60 lbs.	For any quantity less than 6 lbs.	Price in 5 grain tablets. 1,000 tablets.	500 tablets.	250 tablets.	Price by weight per lb.
	Rs.	Rs.	Rs.	Rs.	Rs. a.	Rs. a.	Rs.
Quinine Bisulphate ..	18	19	20	16	8 0	4 4	..
„ Hydrobromide ..	23	24	25	20	10 0	5 4	..
„ Bihydrobromide ..	26	27	28	23	11 8	6 0	..
„ Salicylate ..	24	25	26	..	..	..	..
„ Tannate ..30 per cent. 35 per cent.	14	15	16	..	..	..	14

N.B.—Packing free in tins, sizes 1 lb., 8 oz. and 4 oz. only. Packing in bottles or smaller sizes of tins extra.

Quinine Sulphate.

For 60 lbs. and upwards at a time .. Rs. 18 per lb.
For 6 lbs. and over but less than 60 lbs. at a time .. .. .. „ 19 „
For any quantity less than 6 lbs. .. „ 20 „

Totaquina.

Irrespective of quantity .. Rs. 13-8 per lb.
For sale to hospitals and dispensaries in Bengal, Bihar, Orissa and Assam.

Quinine Hydrochloride.

For 60 lbs. and upwards at a time .. Rs. 23 per lb.
For 6 lbs. and over but less than 60 lbs. at a time .. .. .. „ 24 „
For any quantity less than 6 lbs. .. „ 25 „

Quinine Di-Hydrochloride.

For 60 lbs. and upwards at a time .. Rs. 25 per lb.
For 6 lbs. and over but less than 60 lbs. at a time .. .. .. „ 26 „
For any quantity less than 6 lbs. .. „ 27 „

Quinidine Sulphate.

For 60 lbs. and upwards at a time .. Rs. 20 per lb.
For 6 lbs. and over but less than 60 lbs. at a time .. .. .. „ 21 „
For any quantity less than 6 lbs. .. „ 22 „

Cinchonidine Sulphate.

For 60 lbs. and upwards at a time .. Rs. 25 per lb.
For 6 lbs. and over but less than 60 lbs. at a time .. .. .. „ 26 „
For any quantity less than 6 lbs. .. „ 27 „

Cinchonine Sulphate.

For 60 lbs. and upwards at a time .. Rs. 12 per lb.
For 6 lbs. and over but less than 60 lbs. at a time .. .. .. „ 13 „
For any quantity less than 6 lbs. .. „ 14 „

*Cinchona Febrifuge (Powder).

For 60 lbs. and upwards at a time .. Rs. 9 per lb.
For 6 lbs. and over but less than 60 lbs. at a time .. .. .. „ 9 „
For any quantity less than 6 lbs. .. „ 10 „

*Cinchona Febrifuge (Tablets).

For 60 lbs. and upwards at a time .. Rs. 10 per lb.
For 6 lbs. and over but less than 60 lbs. at a time .. .. .. „ 10 „
For any quantity less than 6 lbs. .. „ 11 „

Supply of Cinchona Febrifuge to all authorised indentors will be rationed in the proportion of 1¼ of Cinchona Febrifuge to 1 of Quinine Sulphate at their existing prescribed prices.

Cinchona Bark (in 50 pound original bags).

Per bag .. Rs. 25.

4 grains Quinine Tablets.

Rs. a.
2 8 per box of 200 tablets (for Bengal and other provinces).
12 1 per 5 boxes—(Transit charges inclusive) for Public in Bengal.
15 8 per lb.

5 grains Quinine Tablets.

Rs. a.
15 8 per lb. sold in 1 lb., ½ lb. and ¼ lb. tins.

5 grains Quinine Hydrochloride Tablets.

Rs. a.
20 0 per 1,000 tablets.
10 0 „ 500 „
5 4 „ 250 „

Packing free in tins, sizes 1 lb., 8 oz. and 4 oz. only. Packing in bottles or smaller sizes in tins extra.

5 grains Quinine Bihydrochloride Tablets.

Rs. a.
22 0 per 1,000 tablets.
11 0 „ 500 „
6 0 „ 250 „

Packing free in tins, sizes 1 lb., 8 oz. and 4 oz. only. Packing in bottles or smaller sizes in tins extra.

Transit charges extra in every case.

***Cinchona Febrifuge** is for sale to Government and Charitable Institutions, Local Bodies and Missionaries only. **It is not for sale to Private Firms or the General Public.**

Quinine Sulphate is now open for sale to the Public at the above rates. But it will be supplied to Hospitals and Dispensaries in Bengal, Bihar, Orissa and Assam at Rs. 18 per pound irrespective of quantities.

Five and ten boxes of Quinine Tablets are sold to the public at the concession rates which will be intimated on application.

Provinces other than Bengal, Bihar, Orissa and Assam will get their supplies of Sulph. Quinine and Cinchona Febrifuge Powder and Tablets from the Director, Botanical Survey of India, Sibpur, Howrah.

Local sale at the jail gate from 10 to 12 noon.

The system of payment is by—*Cash in advance*—by "*Treasury Challans,*" which should accompany the order or indent.

In cases where this is not possible, payment should be made by "*Remittance Transfer Receipts*" or crossed "*Cheques.*"

Indents unaccompanied by cash in advance will be sent Value Payable Post. Credit sale is not allowed except under special circumstances.

In the case of *Government officers* payments will be recovered by *Book Transfer, i.e., Countersigned Invoices,* in the event of *Cash* not accompanying the indent by "*Treasury Challans,*" *Remittance Transfer Receipt or Cheque.*

2. Price and postage must accompany the price of the drug (when the drug is required by post).

The name of the Railway and Steamer Station or Post Office must be written distinctly when the parcels are required by Rail, Steamer or by Post. Railway parcels are sent by passenger train only.

A scale of postage is given below.

	1 oz.	2 ozs.	4 ozs.	½ lb.	¾ lb.	1 lb.
	As.	As.	As.	As.	As.	Rs. A.
Quinine Sulph. ..	..	..	7	7	11	0 11
Cinchona Feb. ..	..	..	7	7	11	0 11
Cinchona Feb. Tablets	..	..	7	7	11	0 11
Quinine Hydrochlor. ..	5	5	7	7	..	0 11
Quinine Di-hydrochlor.	5	5	7	7	..	0 11
Quinine Tablets ..	..	..	7	7	11	0 11
Totaquina ..	..	..	7	7	11	0 11

	1¼ lb.	2 lb.	3 lb.	4 lb.	5 lb.	6 lb.
	Rs. A.	Rs. A.	Rs. A.	Rs. A.	Rs. A.	Rs. A.
Quinine Sulph. ..	0 15	1 3	1 7	1 15	2 7	2 15
Cinchona Feb. ..	0 15	0 15	1 7	1 11	1 15	2 7
Cinchona Feb. Tablets	1 3	1 3	1 11	1 15	2 7	2 15
Quinine Hydrochlor. ..	1 1	0 15	1 7	1 11	..	..
Quinine Di-hydrochlor.	1 1	0 15	1 13	2 5	..	..
Quinine Tablets ..	0 15	0 14	1 7	1 11	1 15	2 3
Totaquina ..	0 15	1 3	1 7	1 15	2 7	2 15

Two different drugs are not packed in the same parcel and postage must be paid separately for each kind.

N.B.—Postage stamps are not accepted as revenue.

Government reserve the right to alter the price without notice.

Registered No. C207

No. 30 of 1936

The Calcutta Gazette

THURSDAY, JULY 23, 1936.

CONTENTS:

	Page.
Report on Public Instruction in Bengal for the year 1934-35	995—1034
Statements of weekly gauge-readings on certain rivers in Bengal	1035—1037
Monthly Weather and Crop Report of Bengal for June 1936	1038
Weather and Crop Report for the week ending 15th July 1936	1039—1042
Vital Statistics of towns of Bengal for the week ending 11th July 1936 ..	1043
Area leased for irrigation up to end of May 1936	1044
Abstract statement showing the approximate volume of traffic and the tollage on canals in Bengal classed as Major and Minor Works and Navigation for the month of May 1936	1045
Statement under the Cotton Ginning and Pressing Factories Act, 1925 ..	1046
Corporation of Calcutta Notice ..	1046
Resolution on the Report on the Administration of the Jail Department of the Presidency of Bengal for the year 1935	1047—1049
Resolution on the Report on the working of the Bengal Children Act, 1922, the Bengal Suppression of Immoral Traffic Act, 1933, the Reformatory Schools Act of 1897 and the Bengal Borstal Schools Act, 1928	1050—1055

SUPPLEMENT.

Official Papers.

Report on Public Instruction in Bengal for the year 1934-35.

CHAPTER I.

General.

1. The year 1934-35 witnessed slow but steady work in the Department of Education. The acute economic distress prevailing throughout the country continued almost unabated. It was chiefly due to this that the full scheme of Bengal (Rural) Primary Education Act, 1930, could not be introduced and development of many other useful measures could not be given effect to.

Notwithstanding there was a general increase in the number of pupils although there was a decrease in the number of institutions.

2. (*i*) In accordance with the optional scheme framed by Government under the Rural Primary Education Act, 1930, district school boards were constituted in the districts of Mymensingh, Chittagong, Pabna, Dinajpur, Noakhali, Bogra, Birbhum, Dacca, Nadia and Murshidabad during the year under report. The change of control of primary education from district boards to the district school boards constituted on a wider basis of representation has brought the authorities concerned with mass education in rural areas in direct touch with the problems of primary education. This will enable these boards to take effective measures for the expansion of primary education within their areas when the Act is in full operation.

(*ii*) The Corporation of Calcutta gave a start to the scheme for the introduction of free and compulsory primary education of all boys between the ages 6 and 10 in Ward IX of the city.

(*iii*) Maps and statistics of secondary schools were collected by the department for a general survey with a view to examine the possibility of their consolidation.

(*iv*) The reduced rates of grants paid to non-Government colleges and secondary schools continued.

(*v*) Introduction of compulsory tiffin in all Government and some aided high English schools and a gradual improvement in the measures provided by schools for improving the health of pupils.

(*vi*) Recognition of the Nepali language by the Government as the medium of instruction for Nepalis in the district of Darjeeling in all classes of primary schools.

(*vii*) Abolition of the Boards of Sonthal education in the districts of Dinajpur and Birbhum.

(*viii*) Inauguration of inter-school associations for the better organisation of physical education, and

(*ix*) Anti-terrorist propaganda by the Government Publicity Department as also by peripatetic lecturers specially appointed for the purpose by the Education Department.

3. (*i*) The progress made in education in Bengal during the year can be gauged from the following tables which give comparative figures for 1934-35 and the preceding year:—

Number of institutions—

	1933-34.	1934-35.
Recognised	70,338	70,241
Unrecognised	1,588	1,419
Total ..	71,926	71,660

Number of pupils—

	1933-34.	1934-35.
In recognised institutions	2,899,541	3,010,845
In unrecognised institutions	67,171	64,427
Total	2,966,712	3,075,272

Number of pupils by sex—

	1933-34.	1934-35.
Male	2,312,148	2,380,783
Female	654,564	694,489
Total ..	2,966,712	3,075,272

(*ii*) The subjoined table indicates the number of various classes of recognised institutions in the Presidency:—

	1933-34.	1934-35.
Colleges (*a*)	70	70
High schools	1,221	1,249
Middle schools	1,919	1,945
Primary schools	61,320	64,309
Special schools (*b*)	2,778	2,668

(*a*) Includes Arts and Professional Colleges and University Classes.
(*b*) Includes madrasahs, technical and vocational schools.

While a different dichotomy gives some idea of the source from which these institutions draw their support.

Recognised Institutions—

	1933-34.	1934-35.
Maintained by Government	322	324
Maintained by district boards	4,247	4,270
Maintained by municipalities	373	374
Aided from public funds	55,092	53,940
Unaided	10,304	1,333

(*iii*) There was an increase of expenditure on public instruction in the Presidency as will be seen from the figures given below:—

Expenditure on public instruction from—

	1933-34.	1934-35.
	Rs.	Rs.
Provincial revenues	1,34,88,852	1,36,19,445
District board funds	17,73,344	18,36,137
Municipal funds	16,06,444	15,67,437
Fees	1,86,72,008	1,92,75,149
Other sources	67,75,671	69,41,135
Total ..	4,23,16,319	4,32,39,303

CHAPTER II.

Administration and Control.

1. Educational institutions in the Presidency are controlled mainly by the Education Department of Government, the two Universities of Calcutta and Dacca, the Board of Intermediate and Secondary Education, Dacca, District Boards, Municipalities, District School Boards constituted under the provisions of the Bengal Rural Primary Education Act, 1930, and various religious and philanthropic societies—both Indian and non-Indian. General education is in charge of the Minister of Education, while European education is controlled, as previously, by a Member of His Excellency the Governor's Executive Council. During the first quarter of the year the Education portfolio was in charge of the Hon'ble Mr. (now Sir) Khwaja Nazimuddin, K.C.I.E. But on 15th June 1934 the Hon'ble Khan Bahadur M. Azizul Haque was appointed Minister of Education in place of Sir Khwaja Nazimuddin, K.C.I.E., who became an Executive Councillor, and held office for the rest of the period under review.

2. The Education Department is manned by—

(*i*) Members of the Indian Educational Service (Men's and Women's Branches),

(*ii*) Members of the Grade I of the Bengal Educational Service (Men's and Women's Branches), now called Bengal Senior Educational Service,

(*iii*) Members of the Bengal Educational Service (Men's and Women's Branches),

(*iv*) Members of the Subordinate Educational Service, and

(*v*) Officers holding (*a*) special posts and (*b*) posts not included in any of the services mentioned above.

(*i*) *Indian Educational Service.*—The number of posts in the Men's Branch of the Indian Educational Service was reduced from 67 (excluding that of the Director of Public Instruction) to 25 owing to the abolition of certain posts from this cadre on the constitution of Grade I of the Bengal Educational Service in the year under report. In the Women's Branch of the Indian Educational Service there was only one post (against 4 in the preceding year) which was held by an

officer on contract; the other three posts were replaced by those in Grade I of the Bengal Educational Service now called Bengal Senior Educational Service.

(*ii*) *Grade I of the Bengal Educational Service (Bengal Senior Educational Service).*—Fifty-three posts were created in Grade I of the Bengal Educational Service (Men's Branch) of which 25 replaced corresponding posts in the Indian Educational Service, 21 were filled on Grade I basis, 1 on a contract basis, and the rest were left vacant. Five posts were created in Grade I of the Bengal Educational Service (Women's Branch); appointments were made to 4 of these posts during the year; the remaining post is meant to replace a post in the Indian Educational Service which is now filled by an officer on contract basis.

(*iii*) *Bengal Educational Service.*—In this Branch of the service there were 192 permanent posts against 202 in the preceding year, the reduction being due to abolition of certain posts and other causes. There were also 16 temporary posts in this cadre as compared with 17 in the previous year. In the Women's Branch there were 21 permanent posts against 20 in the previous year.

(*iv*) *Subordinate Educational Service.*—At the beginning of the year appointments in the Subordinate Educational Service numbered 2,140 divided into various branches, viz., teaching, inspecting, miscellaneous and ministerial. Owing to the abolition of certain posts and creation of new ones the number was reduced to 2,119 at the end of the period under review as detailed below:—

	1st April 1934.	31st March 1935.	
Teaching	1,340	1,324	(including 83 posts held in abeyance or lying vacant).
Inspecting	314	311	
Miscellaneous	90	87	(including 4 posts held in abeyance).
Ministerial	396	397	
Total	2,140	2,119	

Besides the above there were certain other temporary whole-time or part-time posts on 31st March 1935 which are enumerated below:—

Whole-time posts—

(*i*) Lecturers	11
(*ii*) Physical Instructress, Bethune College, and Collegiate School ..	1
(*iii*) Teachers of the School Final Classes attached to Darjeeling Government High School	3
(*iv*) Subdivisional Inspector of Schools, Chittagong Hill Tracts	1
(*v*) Miscellaneous	22
(*vi*) Clerks	12

Part-time posts—

(*i*) Lecturers	10
(*ii*) Drawing Master, David Hare Training College	1
(*iii*) School Medical Officers	3
Total	64

(*v*) (*a*) *Special posts.*—The number of "special posts" decreased during the period from 40 to 38; the decrease was due to the inclusion of one post in Grade I of the Bengal Educational Service (Women's Branch) and the transfer of the other to the Men's Branch of the Bengal Educational Service.

(*b*) The number of posts not included in the classified lists was 11 during the year as against 20 in the year preceding, the decrease being due to the inclusion of 9 posts in Grade I of the Bengal Educational Service. This number excludes the posts of part-time Professors of Geology and Accountancy, Bengal Engineering College, and that of Geology, Presidency College.

3. **Direction.**—Mr. J. M. Bottomley held charge of the office of the Director of Public Instruction during the year with the exception of the period from 20th July to 26th November 1934, when he acted as Secretary to Government in the Education Department. During his absence the duties of the post were performed first by Mr. A. K. Chanda (from 20th July to 25th October 1934) and then by Dr. W. A. Jenkins (from 26th October to 26th November 1934). The post of Assistant Director of Public Instruction was held by Mr. R. Wolfenden up to 2nd May 1934, by Mr. A. K. Chanda from 3rd May to 19th July 1934, from 26th to 31st October 1934 and again from 10th November 1934 up to the end of the year under review, and by Mr. J. M. Sen from 20th July to 25th October 1934, and from 1st to 9th November 1934, Khan Bahadur Mr. Maula Baksh continued to perform the duties of the Assistant Director of Public Instruction for Muhammadan Education. The post of Special Officer for Primary Education was held successively by Mr. J. M. Sen, Maulvi Aftabuddin Ahmed and Khan Bahadur Mr. Tasaddak Ahmed. Mr. J. Buchanan held the post of Physical Director up to 1st January 1935 when he went on leave and was succeeded by Mr. Kshitindra Nath Roy.

4. **Inspection.**—The subjoined table shows the strength of the departmental inspecting staff as it stood on 31st March 1935:—

Inspecting Staff.	Presidency Division.	Burdwan Division.	Dacca Division.	Rajshahi Division.	Chittagong Division.	Total.
Inspectors and Additional or Second Inspectors of Schools	4(*a*)	3(*b*)	3	2	2	14
Assistant Inspectors of Schools for Muhammadan Education	1	1	1	1	1	5
District Inspectors of Schools	6	6	4	8	3(*c*)	27
Subdivisional Inspectors of Schools ..	6	9	9	8	5	37
Sub-Inspectors of Schools ..	44	57	72	51	43	267
Assistant Sub-Inspectors of Schools ..	4	6	..	..	..	10
Inspectresses of Schools ..	1		1			2
Assistant Inspectresses of Schools	6		6			12
Inspector of European Schools, Bengal ..	1					1

(*a*) Includes the post of a Second Inspector of Schools, Presidency Division, which has been kept in abeyance.

(*b*) Includes the post of a Second Inspector of Schools, Burdwan Division, which has been kept in abeyance.

(*c*) Excludes the post of District Inspector of Schools, Chittagong Hill Tracts, which has been temporarily reduced to the status of a Subordinate Educational Service post.

5. **Extra departmental agencies.**—The department received invaluable aid from District and Subdivisional Officers. They gave ungrudgingly their time for work as presidents of managing committees of numerous schools, and during times of unrest and trouble they have earned the special thanks of the department by their generous offers of advice and help. The acknowledgments of the department are also due to chairmen and vice-chairmen of district boards, municipalities, district school boards, and union boards for the interest they have evinced in the improvement of primary education in their respective areas. The work of the various Christian missionary bodies, Ramkrishna Missions and Brahmo Somajes as well as the work of the organisations like the Society for the Improvement of Backward Classes and the Nari Siksha Samiti also deserve special mention for their whole-hearted endeavour for the advancement of education among girls and the members of backward communities. Railway authorities also assisted the cause of education by maintaining schools at important centres which are open to children of all communities although they are meant chiefly for the sons and daughters of railway employees.

CHAPTER III.

Primary Education.

1. **General statistics.**—There was increase in the number of pupils attending primary schools for boys and girls in spite of the fall in the number of schools. The following table gives figures for these and also for the cost of maintaining the schools:-

	1933-34.	1934-35.
Number of schools	64,320	64,309
Number of pupils	2,286,442	2,378,750
Cost	Rs. 80,22,674	81,18,121

Primary education of Indian boys.

(The primary education of Indian girls and Europeans is dealt with in other chapters.)

2. **Schools.**—The number of primary schools for Indian boys rose during the year from 45,431 to 45,588; this increase was shared by the Presidency, Dacca and Rajshahi Divisions. The decrease of schools in the Burdwan and Chittagong Divisions is mainly due to efforts towards amalgamation of weaker schools.

The subjoined table indicates the number of primary schools for Indian boys in the Presidency, division by division:—

Division.	1934-35.						1933-34.
	No. of schools managed by Government.	No. of schools managed by district boards.	No. of schools managed by municipal boards.	No. of schools receiving aid from public funds	No. of schools not receiving aid from public funds.	Total.	Total No. of schools returned in the previous year.
Presidency Division (excluding Calcutta)	30	409	21	7,169	880	8,515	8,291
Calcutta	..	..	146	331	33	510	503
Burdwan Division ..	18	459	35	7,456	1,239	9,207	9,350
Dacca Division ..	13	1,311	22	9,603	1,657	12,606	12,540
Chittagong Division ..	9	582	30	4,821	701	6,143	6,384
Rajshahi Division ..	13	1,262	11	6,433	828	8,547	8,363
Total ..	83	4,023	265	35,813	5,404	45,588	45,431

3. **Pupils.**—On the 31st March 1935, primary schools for Indian boys were attended by 1,865,977 pupils (including 136,637 girls) as compared with 1,790,154 pupils (including 116,146 girls) in the preceding year. Besides this number primary classes of secondary schools had 212,102 pupils against 183,122 in 1933-34. Pupils reading in primary schools for Indian boys and in the primary department of secondary schools therefore numbered 2,078,079 against 1,973,276 in the previous year, there being a gain of 104,803 pupils during the year under review. Outwardly this figure is satisfactory but an appalling state of affairs is disclosed in studying the numerical strength of the various classes. A very large proportion of pupils, viz., approximately about 70 per cent. never reach class IV or V. Moreover, it is to be remembered that in the present conditions of rural life a pupil who has read one or two years in a primary school soon relapses into illiteracy, which implies enormous loss of money, energy and human material. The obvious correctives are better qualified and better paid teachers, greater co-operation on the part of parents in keeping children at school till the end of the primary course and the gradual enforcement, as funds permit, of compulsory education. Of the total male population of school-going age 53·3 per cent. were receiving primary education during the period under review.

4. **Relative progress of Hindus and Muhammadans.**—Classified according to communities, there were altogether 851,003 Hindu and 1,044,577 Muhammadan boys reading in the primary stage at the close of the year under report as compared with 829,976 and 1,007,623, respectively, in the previous year. The number of Hindu boys increased by 21,027 and that of Muhammadan boys by 36,954 in the course of the year. Of the total Hindu male population 7·5 per cent. and of the Muhammadan male population 7·3 per cent. were under instruction in the primary stage.

5. **Expenditure.**—The total cost of maintaining primary schools for Indian boys rose during the year under review from Rs. 64,99,588 to Rs. 65,26,878. Of this amount Rs. 36,86,253 or 56·5 per cent. was borne by the public funds and Rs. 28,40,625 or 43·5 per cent. was met from private sources. In 1933-34 public and private funds contributed 56·26 and 43·74 per cent. respectively of the total direct expenditure on primary schools for Indian boys. The expenditure from public funds was made up of Rs. 21,49,948 from Provincial revenues and Rs. 8,28,146 from district and Rs. 7,08,159 from municipal funds against Rs. 21,62,627, Rs. 7,55,433 and Rs. 7,38,656, respectively. Thus expenditure incurred from Provincial revenues and municipal funds for the maintenance of primary schools decreased, while that from district funds increased. Reduction of grants under certain heads was responsible for the smaller expenditure from Provincial revenues; in the case of municipal funds the decrease of expenditure was mainly due to the closure of some free night primary schools in Calcutta owing to legal difficulties.

6. **Punchayati union schools.**—The number of Punchayati union schools rose from 1,080 in 1933-34 to 1,081 in 1934-35. A sum of Rs. 1,37,863 was sanctioned during the year under review for the maintenance of Punchayati union schools for boys and girls. With the passing of the Bengal (Rural) Primary Education Act, 1930, further extension of the scheme of Punchayati union schools has been postponed as these schools will be fitted in with the new system of primary schools

to be started under the Act. Punchayati union schools are not so popular as the Biss' Primary schools, as the latter do not charge any fees.

7. **Primary schools under Mr. Biss' scheme.**—Pending the introduction of the Primary Education Act, 1930, extension of the scheme to rural areas has been suspended and no new scheme for urban areas could be financed during the year on account of the financial stringency. The number of schools of this type was 283 in the year under report.

8. **Primary schools in Calcutta.**—On the 31st March 1935 there were 510 primary schools for Indian boys in Calcutta with 40,252 pupils as compared with 503 schools having 40,379 pupils in the previous year. Of these pupils 23,985 were Hindus and 12,187 were Muhammadans. Boys reading in primary schools and in primary department of secondary schools together numbered 59,041 on 31st March 1935 against 57,356 on the corresponding date of the previous year. The total cost of maintaining boys' primary schools in Calcutta amounted to Rs. 6,94,369 as compared with Rs. 7,26,795 in the previous year, of which Rs. 5,76,031 was borne by public funds. The Corporation free primary schools which are included in the above figure fell from 150 to 146 due to the amalgamation of some of their schools. The Corporation of Calcutta gave a start to the scheme for the introduction of free and compulsory primary education of all boys between the ages of 6 and 10 in Ward IX of the city.

9. **Night and continuation schools.**—On the 31st March 1935 the Presidency had 891 night schools with 22,349 pupils in them. These schools sit in the evening for about two hours daily and are attended mostly by adults, who owing to their occupations are unable to go to school during the day.

As in the previous year, continuation schools (which exist in the Presidency Division and Calcutta only) continued to be of two types the first type, or group I schools which teach the 3 R.'s being meant for boys, and the second or group II schools for adults. The latter teach Arithmetic and a language besides a technical or commercial subject. On the 31st March there were altogether 260 continuation schools in Bengal attended by 7,157 pupils. It is essential that adequate measures should be taken to spread adult education.

10. **Examination.**—In the year under report 25,146 boys appeared in the primary and maktab final examinations, of whom 19,155 were declared successful. In the previous year the corresponding figures were 19,683 and 14,215 respectively.

11. **Double-shift system.**—The experiment was continued in 5 Biss' type schools in the district of Bogra in the year under review. The average number of pupils per school was 165 against 175 in the previous year. The District Inspector, Bogra, is of opinion that these schools are doing better work than the ordinary primary schools of the district.

12. **School post offices.**—The number of primary school teachers who worked as post masters during the year under review was 282 against 356 in the previous year. The remuneration of postal work varied from Rs. 5 to Rs. 15 a month.

13. **Control by district boards and district school boards.**—The most notable event during the year under report was the inauguration of District School Boards in the districts of Mymensingh, Chittagong, Pabna, Dinajpur, Noakhali, Bogra, Birbhum, Dacca, Nadia and

Murshidabad in accordance with the optional scheme framed by Government under the Rural Primary Education Act, 1930. These district school boards have taken over the entire control of primary education from the district boards. The money which the school boards have at present for running the primary schools consists of the Government grants and the amount spent by the district boards themselves for primary education. Until the cess is levied there will be no income to pay for the establishment of the School Boards. Government are therefore advancing money for the purpose which is to be recouped when the cess is imposed. The initial experience gained by these district school boards will prove of great use when the Act is in full operation.

14. **Teaching and curriculum.**—In most of the primary schools one teacher has to take 3 classes at a time. Untrained as they are in the method of "plural teaching" they cannot give adequate attention to the infant class where the best teaching is necessary. Besides, most of the teachers do not even get a living wage. They have therefore no other alternative but to supplement their slender income in other ways to the almost certain detriment of their work.

There was no change or modification of curriculum during the year under report. The existing course is generally regarded as too heavy and wide for the average village boy.

15. **Training of teachers.**—The total number of Guru and Muallim Training Schools, which train teachers of boys' primary schools and maktabs remained stationary at 85 but the number of pupils attending them fell from 2,241 to 2,195. Of the Guru and Muallim Training Schools, 79 were managed by Government, 1 by the Corporation of Calcutta and the rest by the missionary societies. The total maintenance charges amounted during the year under report to Rs. 348,152.

16. The distribution of primary grants is often delayed mainly owing to large number of separate grant heads. Steps are proposed to be taken so that at least half the amount of the primary grants is paid early in the year.

CHAPTER IV.

Secondary Education.

1. **General.**—The following table which includes figures for secondary schools both for boys and girls (whether Indian or European) shows that the total number both of institutions and pupils increased in comparison with those of the previous year:—

	1933-34.	1934-35.
High English schools	1,221	1,249
Middle English schools	1,889	1,893
Middle Vernacular schools	60	52
Number of pupils	463,060	480,966
Cost of maintenance	Rs. 1,53,76,660	1,58,78,355

The only decline occurs in the case of middle vernacular schools.

Secondary education of Indian boys.

(The secondary education of Indian girls and of Europeans is dealt with in other chapters.)

2. **Schools and pupils.**—The total number of secondary schools for Indian boys rose during the year under review from 3,003 to 3,012. High schools increased from 1,133 to 1,151; while middle English schools and middle vernacular schools fell from 1,817 to 1,815 and 53 to 46, respectively. Pupils reading in high and middle English schools rose by 7,534 and 4,648 respectively, while middle vernacular schools reported a loss of 310 pupils.

3. **Expenditure.**—The total direct expenditure on secondary schools for Indian boys amounted during the year under review to Rs. 1,31,21,179 as compared with Rs. 1,26,59,618. Of the total expenditure Rs. 21,25,807 or 16·2 per cent. came from public funds and Rs. 1,09,95,372 or 83·8 per cent. came from private sources as compared with Rs. 2,096,692 or 16·6 per cent, and Rs. 1,05,62,926 or 83·4 per cent .respectively in the previous year. High English schools cost during the period Rs. 1,02,03,713, middle English schools Rs. 28,70,525 and middle vernacular schools Rs. 46, 941; the corresponding amounts in the previous year were Rs. 97,87,952, Rs. 28,18,912 and Rs. 52,754 respectively.

4. In spite of the distinct rural and agricultural character of the Province the middle vernacular schools in which boys might obtain a good general grounding have never been popular. The vernacular system of education which should be the prop and stay of rural development tends more and more to deteriorate. The thought of matriculation still dominates with the result that a very large number of students whatever be their bent and competence flock to secondary English schools; indeed no education even in the primary classes is popular in Bengal unless it includes some teaching in English.

5. **Manual instruction.**—Fifty high and middle English schools had arrangements for giving manual instruction to their pupils but other secondary schools also are reported to be teaching subjects like carpentry, smithy, weaving, dyeing, etc. These schools may, if properly handled, add variety and interest to school life by relieving the monotony and humdrum routine of the ordinary course.

6. **Agricultural education.**—In pursuance of the scheme sanctioned by Government for introduction of agricultural education in non-Government secondary schools the monthly allowance of Rs. 10 each payable to the teachers trained in agriculture was renewed in favour of 52 teachers according to the recommendation of the Director of Agriculture. The schools which suffered loss on working of their farms or gardens also got a grant up to the maximum of Rs. 100 in case of a farm and Rs. 20 in case of a garden. The question of the training of further batches of teachers from the existing schools in order to keep a reserve of teachers is under the consideration of Government.

7. **School final classes (Science side).**—School final classes do not attract best boys although they provide instruction in a course of science deliberately framed. The science course classes attached to 7 Government high schools in the Presidency had an enrolment of 99

pupils on the 31st March 1935. Out of 36 candidates who were sent up for the school final examination (Science side), 28 were successful.

8. **Results of Matriculation Examination.**—Out of 23,892 boys who appeared at the Matriculation Examination of the University of Calcutta and at the similar school-leaving examination of the Dacca Board of Intermediate and Secondary Education of 1935, 14,272 were declared to have passed. The corresponding number in 1934 were 20,441 and 12,743 respectively.

9. **Grants-in-aid system.**—The system of grants-in-aid and the principle of distribution have not undergone any radical change. The reduction of 10 per cent. emergency cut on grants affected the efficiency and the morale of secondary schools. In view of the peculiar circumstances brought about by the widespread economic distress the rules regarding grants-in-aid had to be relaxed in favour of certain deserving schools.

10. **Control.**—Over this enormous mass of institutions there is no well-organised control. Many of them are private schools and many receive no grant from public funds and escape even that measure of supervision which the receipt of grant entails. Over the high schools there has been a divided control which has long proved unsatisfactory and detrimental to any thorough reorganisation of secondary schools.

11. **Curriculum.**—The new curriculum of secondary schools of Bengal which came into force in 1931 was followed in all schools during the year under review. The teaching of science has made little progress for want of necessary apparatus and teachers for the purpose.

12. **Teachers.**—There were 25,778 male teachers in secondary schools on 31st March 1935. Of them 4,972 were trained as against 20,806 untrained. The private schools have been generally staffed by teachers who are often neither numerous enough nor sufficiently qualified, trained or well paid nor so imbued with a sense of vocation as to be equal to the high responsibilities.

13. **Training of teachers.**—The two Government training colleges at Calcutta and Dacca which train English teachers of secondary schools together registered 173 students on 31st March 1935. All the students except one read the B. T. Course. The cost of maintaining these two colleges amounted during the year under report to Rs. 1,13,422 as compared to Rs. 1,04,697 in 1933-34. Out of 197 students who sat for the B.T. Examination 130 were successful.

On the 31st March 1935, there were 5 normal or first grade training schools in the Presidency; all of these (one in each division) are maintained by Government. These schools are for those intending to become junior teachers in secondary schools. The normal schools registered 394 pupils on 31st March 1935. The cost of maintaining these schools amounted during the year under review to Rs. 1,23,195, nearly the whole of which was contributed from Provincial revenues. Out of 167 students who sat for the examination 141 passed.

The condition of secondary schools, specially in the rural areas, did not improve owing mainly to the depressing economic condition of the villages. The unequal distribution of schools in various localities resulting in an unhealthy rivalry to attract more pupils aggravated the distress. The one-sided system of education provided in secondary schools—the main object of which is to help the students in passing

an examination—proved ineffective to solve the present-day needs. An equitable distribution of schools, based on local requirements in the rural areas—modification of the present curriculum—more extensive provision for manual work are the measures required to make secondary education more popular and effective.

CHAPTER V.

College and University Education.

(*a*) **Colleges.**—The total number of arts colleges in the Presidency remained stationary at 51 during the year. Of these colleges 44 were for men and 7 for women against 45 and 6 respectively in the previous year. The decrease in the number of arts colleges for men was due to the exclusion of the St. Joseph's College, Darjeeling, which had no students in the college department this year owing to the earthquake of 1934 and the increase in the number of arts colleges for women being due to the inclusion of the Kamrunessa Intermediate College, Dacca, which was recognised by the Board of Intermediate and Secondary Education, Dacca. The enrolment of arts colleges increased from 23,023 to 24,403 and the cost of maintenance fell from Rs. 36,18,352 to Rs. 36,17,893. Of the men's colleges, 10 (including the Islamic Intermediate Colleges) were maintained by Government, 20 received aid from the department and 14 were unaided. The following tables give comparative figures of enrolment and maintenance charges of arts colleges for men for the last two years:—

Number of students—

	1933-34.	1934-35.
Hindus	18,878	19,964
Moslems	2,990	3,226
Others	559	556
Total ..	22,427	23,746

Expenditure on arts colleges for men—

	1933-34.	1934-35.
	Rs.	Rs.
Provincial revenue	12,05,403	11,03,774
District and Municipal funds	5,133	4,455
Fees	19,61,306	20,46,310
Other sources	2,96,199	2,91,931
Total ..	34,68,041	34,46,470

A sum of Rs. 2,30,308 was distributed by the department in the year under report in giving grants to private colleges. Financial stringency was responsible for the continuance of the 10 per cent. cut

on all grants. But it was possible to distribute Rs. 45,000 among non-Government colleges on the recommendation of Calcutta University for the improvement of libraries, laboratories and gymnasia as against the original assignment of Rs. 1,29,000.

2. *Government colleges.*—The number of students reading in Government arts colleges for men rose from 3,508 to 3,855 during the period. The maintenance of these colleges cost Government Rs. 13,24,156 in the year under review of which Rs. 8,65,749 was provided from Provincial revenues, so that the average annual cost of educating a student was Rs. 343 of which Rs. 224 was met from Provincial revenues.

The system of tutorial supervision over college students which was introduced in the preceding year in first grade Government colleges was extended during the year under review to all Government colleges. The system is reported to have worked smoothly and produced generally satisfactory results bringing the students and the teachers in closer personal contact. The figures for individual colleges are given in the subjoined table:—

Figures relating to Government colleges for men.*

College.	Number of students.			Cost.				Average cost per student.	
	Hindus.	Moslems.	Others.	Total	Provincial revenues.	Other sources.	Total.	Total cost.	Cost per student from Provincial revenues.
					Rs.	Rs.	Rs.	Rs.	Rs.
Presidency	1,025	169	15	1,203	2,28,469	2,24,882	4,53,351	383	193
Islamia ..	..	379	..	379	87,302	34,038	1,21,340	311	223
Sanskrit ..	115	..	..	115	38,393	5,923	44,316	375	325
Hooghly ..	253	21	1	275	1,12,915	25,293	1,38,208	504	412
Krishnagar	268	16	9	293	77,495	28,462	1,05,957	378	276
Chittagong	255	165	25	445	87,335	36,652	1,23,987	304	214
Rajshahi ..	453	163	..	616	1,17,729	61,752	1,79,481	314	206
Dacca Intermediate	241	155	..	396	64,632	33,298	97,930	262	178

*Islamic Intermediate Colleges maintained by Government are dealt with in Chapter IX.
†Includes 118 post graduate students.

The most remarkable event of the year under review was a visit to the Dacca Intermediate College by Their Excellencies Lord and Lady Willingdon, accompanied by His Excellency Sir John Anderson, on the 8th January 1935. The hostel building of the Dacca Intermediate College was made over to the Military authorities, their quarters at Amlapara having been damaged by a cyclonic storm and the hostels of the college were removed to the University Hall.

Founder's day at Presidency College was duly observed in the presence of distinguished gathering. His Holiness Syedana Tahir Shifuddin Sahib paid a visit to the Islamia College during the year

under report and generously gave a donation of Rs. 1,000 to the College Duty Fund. The research department of the Sanskrit College continues to be a centre of attraction for senior scholars of Indian and foreign universities on philosophical and indological subjects. The scheme for the establishment of an agricultural institute attached to the Rajshahi College has been successfully pursued. The Institute will be opened in July 1936.

A long-felt want has been removed by the electrification of the Chittagong College building. The Muslim hostel of the Krishnagar College is going to have shortly a building of its own.

There was demand for extended affiliation in some of the colleges especially in Civics in I.A. and Economics (Hons.) in B.A. Affiliation in I.A. Civics and B.A. (Hons.) Economics was obtained by the Rajshahi College and in B.A. Bengali as a second language by the Chittagong College just after the close of the year.

3. *Non-Government colleges.*—Besides the colleges maintained by Government there were 34 other arts colleges for men in the province, 20 received a regular monthly grant-in-aid from public revenues, and 14 were maintained entirely from private sources.

In the aided colleges the number of students rose from 10,218 to 10,633 and the cost of maintenance from Rs. 12,32,958 to Rs. 12,94,754 towards which Provincial revenues contributed Rs. 2,30,767.

The new building of the St. Xavier's College was opened by the Hon'ble Minister of Education. There has been a notable increase in the number of women students, joining the Scottish Church College, Calcutta, the Brojomohun College, Barisal, and the Ananda Mohan College, Mymensingh.

The Serampore College celebrated the centenary of the death of its founder Dr. Carey.

For obvious reasons many guardians send their more intelligent wards to Calcutta or other famous towns with the result that the roll strength of colleges in mufassal suffers.

In the unaided Colleges the total number of students rose from 8,701 to 9,258 and the cost of maintaining them from Rs. 8,24,753 to Rs. 8,27,560. Some of the colleges in Calcutta are too large to permit of effective personal guidance or tutorial help. Many of these have no adequate playing fields. Few of them have been able to create any corporate tradition or attract any deep sense of loyalty.

(*b*) **Universities.**—Sir Hasan Suhrawardy, KT., O.B.E., M.D., remained as Vice-Chancellor of Calcutta University up till 7th August 1934 when he was succeeded by Mr. Syamaprasad Mookerjee, M.A., B.L., BARRISTER-AT-LAW, M.L.C. The late Babu Ram Charan Mitra, C.I.E., had left a legacy of Rs. 10,000 to the University for the purpose of development of Industrial Education in this country. The legacy was accepted with thanks by the Syndicate on the 14th November 1934. A committee was appointed by the Syndicate to consider the question of completion of the fourth story of the Asutosh Building. The building and equipment of the proposed 3rd floor will cost about Rs. 1,20,000 and the Senate at its meeting on 29th September 1934 sanctioned this expenditure. The following comparative table shows the number of

students (both post-graduate and undergraduate) reading in the University of Calcutta during the last 2 years:—

	1933-34.	1934-35.
In M.A. classes	1,115	723
In M.Sc. classes	239	252
Under-graduate students	154	169
Women students	58	40

There was a marked decrease in the number of students in the M.A. classes. It is not likely that there will be an appreciable improvement in the number of students while the present economic distress continues.

The most important change in the staff of the Dacca University during the session is the retirement of Professor G. H. Langley from the Vice-Chancellorship and the appointment of Mr. A. F. Rahman in his place. The executors of the Will of late Babu Jagamohan Pal have agreed to place at the disposal of the University a sum of Rs. 4 lakhs for a medical college to be started at Dacca in the name of the late Jagamohan Pal. The number of students under training in Dacca University rose from 984 to 986 on the 31st March 1935; of this number 542 (including 37 women students) were reading for Arts Degrees, 233 for Science Degree, while 135 were in the Law Department 50 in the Commerce Department and 26 engaged in Research. The Halls (including the women's hostel) had 365 students in residence on 31st March 1935.

(*c*) **Board of Intermediate and Secondary Education, Dacca.**—The Dacca Board has completed the 15th year of its existence. The most notable change during the period under review was that the Government gave effect to the proposal of appointing the Vice-Chancellor of the Dacca University as the Honorary Chairman of the Board. The cost of maintaining the Board amounted in the year under report to Rs. 44,510 of which Rs. 6,033 was met from Provincial revenues. Excluding the Islamic Intermediate Colleges at Dacca, Chittagong and Serajganj the number of Intermediate colleges remained unchanged at 5. Two of these colleges, viz., Dacca Intermediate College and Eden Intermediate College for girls are maintained by Government the Jagannath Intermediate College received aid from the department.

CHAPTER VI.

Professional and Technical Education.

1. **Law colleges and classes.**—Facilities for the study of law were afforded, as previously, by three institutions in the Presidency, viz., the University Law College, Calcutta, the Ripon Law College, Calcutta, and the Law Department of Dacca University. The total enrolment of the 3 institutions declined further from 2,214 to 1,990. The total cost of maintaining the University Law College, Calcutta, and the Ripon Law College fell during the period under review from

Rs. 2,17,946 to Rs. 2,05,996. The cost of maintaining the Law Department of Dacca University which has not been shown separately in the University returns, is included in General Tables under the head "Universities". Altogether 1,214 students appeared in the Final, B.L. Examination from the 3 institutions, and of these 519 were successful

2. **Medical colleges and schools.**—Advanced medical education was provided, as previously, by three institutions, viz., Calcutta Medical College, the Carmichael Medical College, Belgachia, and the School of Tropical Medicine and Hygiene. These institutions had 1,461 students (including 16 women) on 31st March 1935 as compared with 1,413 (including 16 women) on the corresponding date of the preceding year. The cost of maintaining the three institutions rose during the year from Rs. 8,60,080 to Rs. 9,32,462. The three institutions sent up altogether 554 students for the Medical Examinations of whom 227 were declared to have passed.

The number of recognised medical schools in Bengal was nine as before. The total enrolment of these schools fell from 2,535 (including 40 women) to 2,478 which included 45 women. The cost of maintaining medical schools rose during the period from Rs. 5,61,537 to Rs. 5,84,173. Of the 1,424 candidates who presented themselves at the examination from medical schools, 712 came out successful.

3. **Veterinary College, Belgachia.**—The Veterinary College had 170 students on 31st March 1935 against 184 on the corresponding date of the previous year. The cost of maintaining the college fell during the period under review from Rs. 1,82,571 to Rs. 1,74,760 which was met entirely from Provincial revenues. Out of 169 students, who appeared in the annual examination during the period, 132 were successful.

4. **Bengal Engineering College.**—In the Bengal Engineering College, Sibpur, enrolment fell from 283 to 260 (of whom 148 were in the Civil Engineering Department, 68 in the Mechanical and Electrical Engineering Department and 44 in the Industrial Department). Of the total roll-strength 5 were Europeans and Anglo-Indians, 210 Hindus, 41 Muslims, and 4 of other communities. The cost of maintaining the college fell during the period from Rs. 3,69,330 to Rs. 3,53,859 of which Rs. 2,94,336 as compared with Rs. 3,07,346 was borne by Provincial revenues. The average annual cost of educating each student amounted to Rs. 1,325 of which Rs. 1,102 was borne by Government. The results of the college in the various examinations held during the period under review are noted below:—

Examinations.	Examinees.	Passes.
B. E. (Civil Engineering)	34	29
B. E. (Mechanical Engineering)	13	12
I. E. (Civil Engineering)	64	41
Associateship in Mechanical Engineering	2	2
Diploma in Mechanical and Electrical Engineering	10	8

5. **Ahsanullah School of Engineering.**—In this school enrolment fell from 409 to 395 (177 in the Overseer classes, 145 in the Sub-Overseer classes and 73 in the Artisan classes). Of the total number

316 were Hindus, 76 Muslims and 3 of other communities. The cost of upkeep rose during the period under review from 1,28,652 to Rs. 1,36,469 of which Rs. 91,465 against Rs. 84,580 was provided from Provincial revenues. Eighty-four out of 108 students passed the Overseer Examination and 72 out of 98 students passed the Sub-Overseer Examination from this school.

6. **Bengal Survey School.**—The enrolment of Bengal Survey School, Mainamati, remained stationary during the period at 55. The cost of maintaining the school fell from Rs. 19,672 to Rs. 18,995 of which Rs. 14,391 was met from Provincial revenues. The school passed 20 out of 22 students in the Survey Final Examination and 27 out of 32 students in the Amin Examination.

7. **Art schools.**—The number of Art schools in the Presidency remained unchanged during the year at five of which one was managed by Government and two were aided. The roll strength of the Government School of Art increased slightly from 280 to 281 of whom 268 were Hindus and 10 were Muslims, the rest being of other communities. The cost of maintaining the school also rose during the period from Rs. 41,843 to Rs. 52,211 of which Rs. 38,384 was met from provincial revenues. Of the 25 students who sat for the Final Examination during the period, 21 were successful.

8. **Commercial institutions.**—Facilities for advanced commercial education were provided, as before, by the two Universities, and the Commerce Department of Vidyasagar College, Calcutta. Instruction in I. Com. is imparted by Jagannath Intermediate College, Dacca. The four institutions reported 1,023 students on 31st March 1935 against 876 in the preceding year. Altogether 29 students sat for the M. Com., 294, for the B. Com. and 53 for the I. Com. Examinations during the year under review of whom 23, 150 and 37 respectively were declared successful.

The number of commercial schools returned on 31st March 1935 was 22 as in the previous year, of which one was managed by Government, and two were aided. In the Government Commercial Institute, Calcutta, enrolment increased during the period from 396 to 441 of whom 409 were Hindus, 18 were Muslims and the rest of other creeds. The cost of upkeep fell from Rs. 58,877 to Rs. 55,998 of which Rs. 27,457 was borne by provincial revenues. Ninety-seven students of the school sat for the Final Commercial Course Examination of whom 77 passed. In the Special Commercial Examination 72 candidates appeared of whom 42 were successful. For the encouragement of commercial education among backward communities, Government have sanctioned the creation of 2 stipends of Rs. 12 a month each tenable for 2 years at the Government Commercial Institute, which are to be awarded to students of backward communities.

9. **Weaving schools.**—Of the weaving schools some are permanent as stated in previous reports, while others are peripatetic. The Government Weaving Institute, Serampore, which imparts up-to-date instruction in weaving, registered 161 pupils on 31st March 1935 against 156 in the preceding year. The cost of maintaining the institute increased during the year from Rs. 39,217 to Rs. 41,382 of which Rs. 39,986 was borne by Provincial revenues. Sixty-eight out of 73 candidates passed the Final Examination of the institute.

10. **Music schools.**—During the year under review, there were 7 music schools in the Presidency as previously of which 6 received aid from public funds. Three of these schools were meant for boys and 4 for girls. Altogether 340 pupils attended music schools on 31st March 1935 as compared with 328 in the preceding year.

11. **Agricultural schools.**—There is no institution in this Presidency for imparting advanced instruction in agriculture. In the chapter on secondary education an account has been included showing the arrangements which have been made by the department for giving agricultural education in general schools. The number of agricultural schools proper were six during the year as previously of which two were managed by Government and three were aided. These schools registered 278 pupils on 31st March 1935 against 279 in the previous year.

12. **Other technical centres.**—Among technical and industrial schools most of which are controlled by the Director of Industries, the following may be specially mentioned in this report:—

(*i*) In the Calcutta Technical School enrolment rose during the year from 164 to 182. The cost of maintaining the school also increased from Rs. 49,426 to Rs. 57,242 of which Rs. 35,079 was met from public funds. Out of 68 candidates who registered for the annual entrance examination, 60 were successful. Four out of 8 students passed the Electrical Wiremen Course Examination. The Plumbing and Sanitary Fitting Course, which is of 3 years' duration, has been made compulsory for those who seek registration as recognised plumbers.

(*ii*) In the Kancharapara Technical School roll strength was stationary at 78. The cost of maintenance fell during the period from Rs. 90,350 to Rs. 84,727 of which Rs. 29,727 was borne by Provincial revenues. Of the 59 candidates who appeared at the Board of Apprenticeship Training Annual Examination, 39 were declared to have passed.

(*iii*) The B. N. R. Technical School, Kharagpur, registered 55 apprentices on 31st March 1935 against 51 in the previous year. The cost of maintaining the school was Rs. 4,546 against Rs. 5,072 of which Rs. 1,476 was borne by public funds. Of the 58 apprentices who appeared in the Board of Control's Technical School Examination, during the period under review 34 came out successful.

CHAPTER VII.

Education of Indian Girls and Women.

1. At the end of the year 1934-35 the total number of educational institutions of all types and grades meant for Indian girls fell from 19,427 to 19,217, but the number of pupils attending them rose from 536,168 to 555,835. Thus while there was decrease in the number of institutions by 210 that of pupils attending them increased by 19,667. Girls reading in girls' schools together with those under instruction in boys' schools numbered 689,141 on the 31st March 1935; of this total 295,296 were Hindus, 382,900 were Muhammadans and the rest were of other communities. Altogether 10,892 boys were attending girls' schools during the year.

2. **Controlling Agency.**—There were, as previously, 2 Inspectresses and 12 Assistant Inspectresses of Girls' Schools in the Presidency. These officers were distributed equally between East and West Bengal.

3. **Collegiate Education.**—During the year under report the number of Art Colleges for Indian women rose from 6 to 7 including the Women Section of the Vidyasagar College, which counts as a separate unit and the Kamrunnesa Intermediate College for Girls, Dacca, recognised by the Dacca Board of Intermediate and Secondary Education. Two of the arts colleges for women, viz., Bethune College, Calcutta, and the Eden Intermediate College, Dacca, are as before, directly managed by Government and the rest are under private management, one, viz., the Diocesan College being aided. The women colleges registered 657 pupils on 31st March 1935 as compared with 596 on the corresponding date of the previous year. The following table shows the enrolment and the cost of maintenance of each of the women's colleges. Besides this number there were 569 girls reading in arts colleges for men and in the University classes. The demand for college education is steadily increasing among Indian girls.

Figures relating to arts colleges for women.

College.	Number of students.				Cost of maintenance.			Average cost per student.
	Hindus.	Moslems.	Others.	Total.	Provincial revenues.	Other sources.	Total.	
					Rs.	Rs.	Rs.	Rs.
Bethune College	178	11	5	194	95,317	13,213	1,08,530	545
Eden Intermediate College, Dacca	34	4	..	38	18,796	2,662	21,458	429
Diocesan College ..	16	1	21	38	..	..	..*	..
Loreto House	22	3	75	100	750	16,030	16,780	176
Women's Department, Vidyasagar College	193	2	..	195	..	10,190	10,190	2
Victoria Institution ..	28	2	5	35	..	5,598	5,598	164
Kamrunnesa Intermediate College	56	1	..	57	..	8,867	8,867	158

*The authorities of the Diocesan College were unable to furnish expenditure figures as the college has closed.

In the Bethune College roll strength increased by 56 and the increase being accompanied by a considerable reduction in the average cost per girl. The Principal is of opinion that, in arts, affiliation should be secured in Bengali up to B. A. standard and in Science it should be extended up to the B.Sc. standard.

The Bethune Memorial Day was observed on the 12th August 1934 by prayers at the tomb of Mr. Drinkwater Bethune in the morning and a meeting in the afternoon in which the teachers and the students placed on record their affection and veneration for the departed great. The college passed 8 out of 11 girls in the B.A. Examination; in the Intermediate Examination the college passed 26 out of 32 girls in Arts and 10 out of 13 girls in Science.

The Eden Intermediate College, Dacca, continues to occupy rented buildings. The diminution in the roll number of the college is attributed to the starting of a private college at Dacca. Of the 48 students who appeared in the last Intermediate Examination in Arts, 42 passed.

The Diocesan College passed 16 out of 20 students in the B. A. and 18 out of 18 students in the I. A. Examinations. In view of the decision of the Diocesan authorities to close their girls' college in Calcutta, there was an endeavour to establish a girls' college in South Calcutta in the Hastings House of the Government of India, but the scheme had to be dropped because the Hastings House could not be spared for the purpose.

The Loreto House presented 9 students in the B. A., 29 students in the I. A. and 4 students in the I. Sc. Examinations, of whom 7, 26 and 2 respectively were successful. The Victoria Institution passed 8 girls out of 20 who appeared at the I. A. Examination.

4. **Secondary schools**—(*i*) *High schools.*—The number of high English schools for Indian girls rose in the year under report from 44 to 54; the starting of new high schools for girls and conversion of some middle English schools in Calcutta and Jessore account for the increase. Of these schools five are, as previously, maintained by Government, 41 are aided by the department and the rest are unaided. The total number of girls reading in high schools also increased from 13,212 to 16,404. In the Matriculation Examination held in 1935, 812 girls out of 1,523 were successful; the corresponding figures in the previous year were 609 and 1,047 respectively.

The Inspectress of Schools, Dacca Circle, remarks that the practice of training girls in boys' institutions and of turning them out of schools just before boys' instruction begins is far more harmful than a system of co-education.

(*ii*) *Middle Schools.*- The number of middle English schools for Indian girls rose during the year from 70 to 76. Girls reading in middle English schools numbered 11,764 against 10,699 on the 31st March 1934. The number of middle vernacular schools for girls, however, declined from 7 to 6; these schools taught 798 girls as compared with 810 girls in the preceding year.

High schools for girls cost Rs. 9,49,162 and middle schools Rs. 3,46,948 during the year of which Rs. 3,47,108 and Rs. 1,34,770 respectively came from public funds.

5. **Primary Schools.**—At the close of the year under review there were 18,703 primary schools of all types for Indian girls as compared with 18,871 in the previous year. Primary schools registered 638,915 girls on 31st March 1935, against 603,829 in the previous year. The number of punchayati union schools for girls stood at 168 on the 31st March 1935. The free primary schools for girls managed by the Corporation of Calcutta rose during the year from 85 to 86 and they taught 13,360 pupils as compared with 12,785 in the previous year. For the education of peasant girls in remote places there were 22 peasant girls' schools in the Presidency Division. The work of the Nari Siksha Samiti, the Society for the Improvement of Backward Classes, Bengal and Assam Brahmo Somajes and Christian Missionary Societies deserves special mention in connection with the expansion of the girls' education both primary and secondary. They have started schools in localities where the lower classes of society, who are generally illiterate, constitute the bulk of the population. The Society for the Improvement of

Backward Classes which receives from the department a substantial grant for their educational activities managed 116 girls schools during the period under review. The Uttarpara Hitakari Sava continues to encourage female education by holding examinations and awarding scholarships to girls. Primary schools for Indian girls cost Rs. 15,17,077 during the year under review to which 10,28,623 was contributed from public funds.

6. **Special schools.**—In 1934-35 the number of technical, industrial and other special schools increased from 46 to 54; these schools taught altogether 3,298 pupils as compared with 2,789 pupils. Most of these schools are under mission management and they usually teach needle-work of various kinds, lace making and embroidery, besides giving some general education.

7. **Needle work.**—There has been marked improvement in the quality of needle-work done in girls' schools which is due mainly to the able guidance of the peripatetic teachers. The institution of the Lady Carmichael Diploma has also stimulated a desire for improving the work.

8. **Curriculum.**—The curriculum is much the same as in boys' schools, with the addition of a few subjects like needle-work and domestic economy. These subjects, however, cannot be taught in many rural schools which have no women teachers. The curriculum is probably too literary for the majority of girls who do not proceed to higher studies.

9. **Training of teachers.**—There is no Government training college for women. The authorities of the Diocesan College have closed down their training department during the year under review and the Scottish Church College has now taken up the training of women teachers in its stead. Women teachers of secondary schools received professional training also in the training department of the Loreto House. The combined capacity of these two is 59.

The number of training schools and classes which afford training facilities to women teachers employed in primary schools and the lower classes of secondary schools remained stationary at 10. Of the training schools three were as before directly managed by Government and seven by Christian and Brahmo Missions. The women's training schools registered 271 pupils as compared with 256 in the preceding year. The total cost of maintaining the training schools for women amounted in the year under report to Rs. 82,431 of which Rs. 67,270 was met from Provincial revenues.

The demand of trained teacher is daily increasing and the output is altogether insufficient to cope with the growing demand.

The following table shows the number of trained women teachers in high, middle and primary schools:—

Women teachers.

	Total number of teachers.	Number of trained teachers.
Primary schools	5,775	605
Middle schools	459	257
High schools	597	178

CHAPTER VIII.

Education of Anglo-Indians and Europeans.

1. **Schools.**—On the 31st March 1935 there were, as in the previous year, 67 institutions in Bengal for the education of Anglo-Indian and European children. Of the 67 institutions, 64 are for general education and 3 impart special instruction. Of the 64 institutions which provide general education 24 may be classified as secondary, 19 higher grade, 20 primary and 1 ungraded school. The 3 institutions which impart special instruction are (1) the Commercial and Technical classes attached to the Young Women's Christian Association, Calcutta, (2) the Dow Hill Training College, Kurseong, and (3) the Children's House, Kurseong, which is intended for backward and mentally defective children. Three of the institutions, viz., Victoria Boys' School and Dow Hill Girls' School, Kurseong, for general education and Dow Hill Training College, Kurseong, for the training of school mistresses are directly managed by Government; the rest are managed by various religious and philanthropic societies and the railway authorities.

2. **Pupils.**—The following table shows the distribution of the 67 institutions under various agencies together with their roll strength :—

	1933-34.		1934-35.	
	Number of schools.	Number of pupils.	Number of schools.	Number of pupils.
Government	3	385	3	416
Church of England	9	1,817	9	1,885
Church of Rome	30	6,563	30	6,835
Non Conformist	4	850	4	834
Undenominational	17	1,407	16	1,385
Jews	3	338	3	363
Armenians	1	98	1	108
Seventh Day Adventists	..	..	1	27
	67	11,458	67	11,853

There was thus an increase of 395 pupils reading in schools for Anglo-Indians and Europeans on 31st March 1935. Of the 11,853 pupils, 6,505 were boys and 5,348 were girls as compared with 6,191 boys and 5,267 girls in the preceding year; thus the number of boys increased by 314 while the number of girls by only 81. Non European pupils reading in European schools numbered 2,667 against 2,556 in the preceding year; of these 1,154 were Indian Christians, Jews, Armenians and others.

3. **Expenditure.**—The total cost of maintaining schools for Anglo-Indians and Europeans amounted during the year under review to Rs. 37,63,235 (including boarding charges of Rs. 10,26,276 as compared with Rs. 10,58,215 in the previous year). The amount was derived from the following sources:—

	1933-34.	1934-35.
	Rs.	Rs.
1. Provincial revenues	8,41,463	9,87,878
2. Municipal grant	44,505	37,936
3. Fees	15,94,025	15,74,950
4. Subscriptions and donations	11,12,768	11,62,471
Total	35,92,761	37,63,235

There was an increase in subscriptions, donations and contributions from Provincial revenues but a fall in fee income and in municipal grants.

4. **Scholarships.**—An expenditure of Rs. 28,383 as compared with Rs. 28,039 in the previous year was incurred during the year 1934-35 for the award of scholarships to pupils of European schools. This figure excludes the amount of scholarships which were awarded by other provinces but paid in Bengal.

5. **Teachers.**—There were 797 teachers employed in European schools during the year ending 31st March 1935 as compared with 795 in the previous year. Of these teachers 157 were graduates (of whom 93 were trained teachers) and 443 were trained teachers (including 93 trained graduates), 354 (including 64 graduates) were untrained.

6. **Training of teachers.**—On account of the prevailing financial depression no European or Anglo-Indian male teacher was deputed to the Chelmsford Training College Ghoragali, Punjab, for training during the year 1934-35. A proposal has now been made by the Provincial Board of Anglo-Indian and European Education to formulate a scheme for training Anglo-Indian and European male teachers at the David Hare Training College, Calcutta.

The Dow Hill Training College, Kurseong, which is the only institution for the training of European and Anglo-Indian women teachers in Bengal had 19 students on 31st March 1935 as compared with 17 on the corresponding date of the previous year. In the annual examination of the second-year students in November 1934, 9 senior students presented themselves and all of them were successful.

7. **Examinations.**—The following table shows the result of the various examinations held in 1933-34 and 1934-35:—

	1933-34.				1934-35.			
	Number sent up.		Number passed.		Number sent up.		Number passed.	
	Boys.	Girls.	Boys	Girls	Boys.	Girls.	Boys.	Girls.
Higher Grade Schools.								
High grade schools' Scholarship Examination ..	20	13	19	12	19	17	17	14
Higher grade school Final Examination .. .	42	7	26	6	28	10	17	8
Secondary Schools.								
Cambridge Junior Local Examination	94	105	65	84	92	107	60	77
Cambridge School Certificate Examination	111	75	92	55	99	70	59	47
Matriculation Examination .	83	15	57	7	137	40	87	20
I.A. Examination	77	14	61	14	70	31	47	28
I.Sc. Examination ..	217	6	166	2	259	7	163	3
Dow Hill Training College Final Examination ..	..	7	..	7	..	9	..	9

8. **Education of subnormal children.**—The Children's House, Kurseong, which adopts special methods for training mentally and physically defective European children, registered 23 pupils on 31st March 1935 as compared with 24 pupils in the previous year. Stipends amounting to Rs. 2,520 were awarded by the department during the year under review for the maintenance and education of the children living in the House.

9. **Trust Funds.**—(*1*) *Sussex Trust.*—The income of the fund was Rs. 28,436 during the year 1934-35 and the expenditure for the same period was Rs. 17,811-15; seven overseas scholars and twenty local scholars profited by the scholarships awarded. An expenditure of Rs. 4,166-2 was incurred in connexion with the award of scholarships under the head "Special Endowwment G—Overseas scholarships for European and Anglo-Indian Girls (ex-students of the Dow Hill Traning College Kurseong)." Besides a sum of Rs. 27,500 was spent out of this trust fund on account of the construction of primary school for Indian boys at Kidderpore.

(*2*) *Doveton Trust Fund.*—The total receipts including the opening balance on 1st April 1934 and the interest accruing on Government securities during the year under report was Rs. 9,074-9-8 and the total expenditure for the same period was Rs. 6,488-0-6 leaving a closing balance of Rs. 2,586-9-2. Altogether 43 scholarships were awarded during the year out of the income derived from the fund. The Inspector of European Schools, Bengal, was administrator of the fund as previously.

10. **Controlling Agency.**—During the year under review Mr. T. G. Barker continued to act as Inspector of European Schools, Bengal, up to 3rd December 1934 when Mr. R. Woltenden, of the Indian Educational Service, succeeded Mr. Barker and continued to work during the rest of the year.

11. **European Schools Code.**—Owing to financial stringency it was not possible during the year under review to give full effect to the provisions of the revised Code of Regulations (1929) for European Schools, which led as in the previous year to a reduction in the amount admissible for maintenance, teaching staff and fixed grants to European schools in the Presidency.

12. **His Excellency the Governor's Calcutta European schools' Emergency Fund.**—During the year under review 221 Anglo-Indian and European children reading in 21 schools were assisted to the extent of Rs. 19,035 out of this fund. It would have been impossible for these students in these days of financial depression to continue their education without this help. His Excellency the Governor has kindly assented to this fund being continued for another year and an appeal has been made to the European clubs to subscribe again to this fund which has given such valuable help to European and Anglo-Indian children whose parents have been thrown out of employment owing to the financial depression.

13. **Earthquake.**—Many European schools in the hills suffered from the effect of the earthquake in January 1934. A sum of Rs. 1,77,775 was granted for repairs to 4 hill schools by the Viceroy's Earthquake Relief Fund.

14. **Board of Anglo-Indian and European Education.**—The most important event of the year under review has been the Constitution of the Board of Anglo-Indian and European Education which will have a marked influence on the development of Anglo-Indian and European education in the future. The duty of the Board is (1)to make recommendations to the Inter-Provincial Board in matters of the courses of instruction, system of examination, condition of recognition of schools and the provisions of the Code of regulations for European Schools, (2) to make recommendations to the Local Government for giving effect to the recommendations of the Inter-Provincial Board and (3) to examine and submit views on that part of the education budget which relates to the Anglo-Indian and European Education, and (4) to examine and submit views on the schedule of new demands in the Education Budget. It is too early now to say much about its work in this report but the Board has started on its course with energy and thoroughness and is investigating many important problems concerning the education of the Anglo-Indian and European students.

CHAPTER IX.

Education of Special Communities.

1. **Education of Muhammadans : Statistics.**—During the year under review the total number of Muslim students reading in all grades of educational institutions for Indians rose from 1,541,342 to 1,598,675. Of the total number 1,215,775 were boys and 382,900 were girls as against 1,131,780 boys and 295,296 girls belonging to the Hindu community returned on 31st March 1935. The proportion of Muslim

students to the total number of pupils under instruction at the end of the year rose from 51.9 per cent. to 53.3 per cent. The statistics for the last two years which are furnished in the following table show that the number of Muslim students increased in course of the year in all grades of institutions except professional colleges. The fall in the number of Muslim students in professional colleges is to be attributed mainly to the prevailing economic distress in the country, which has affected more particularly the Moslem community. In arts and professional colleges, Muslim pupils constituted 13.7 and 11.03 per cent. of the total enrolment against 13.3 and 11.5 per cent. respectively in the year preceding; in the high, middle and primary stages, their proportion to the total number of students under instruction were 21·4, 24·1 and 55·1 per cent. against 21·2, 24·6 and 5·01 per cent. respectively in the previous year; in special schools the proportion of Muslim students rose in the year under report from 69·3 to 70·3 per cent.

	1933-34.		1934-35.	
	Number of Muhammadan students.	Percentage.	Number of Muhammadan students.	Percentage.
Arts Colleges	3,376	13·3	3,600	13·7
Professional Colleges	594	11·5	569	11·03
High stage	29,378	21·2	31,363	21·4
Middle stage	30,587	24·6	31,227	24·1
Primary stage	1,361,706	55·01	1,418,318	55·1
Special Schools	82,446	69·3	84,198	70·3

2. **Special institutions for Muhammadans.**—Besides the ordinary schools and colleges which are open to students irrespective of caste and creed, special facilities for higher education are offered to Muslim boys by the Muslim Hall of Dacca University, and the Islamia College. The following lines briefly describe the progress achieved by Moslem students in the year under report in the special institutions of different types which are primarily intended for them: —

(*i*) *Islamic intermediate colleges.*—During the year ending 31st March 1935 the number of Islamic intermediate colleges in the province remained stationary at three, two of which are, as previously, Government managed and one is aided. The number of students in the 3 colleges rose from 154 to 166 on 31st March 1935. Of the 99 students that appeared in the Islamic Intermediate Examination in 1935, 73 were successful.

(*ii*) *Madrasahs.*—The total number of Madrasahs in Bengal fell in course of the year from 725 to 713, but the number of pupils attending them rose from 65,683 to 67,421. The total cost of maintaining madrasahs increased from Rs. 13,83,901 to Rs. 13,91,331 and the amount

of expenditure met from public funds from Rs. 4,88,107 to Rs. 4,98,076. The particulars in respect of each type of madrasahs are given below:—

	Number of Madrasahs	Number of pupils.	Cost of maintenance.	Cost met from public funds.
			Rs.	Rs.
(*a*) Reformed Senior (High) ..	37	6,284	2,78,885	1,39,591
(*b*) Reformed Junior	546	50,885	9,03,704	2,54,942
(*c*) Old Type Senior	48	6,204	1,83,497	98,894
(*d*) Old Type Junior	82	4,048	25,245	4,649
Total ..	713	67,421	13,91,331	4,98,076

In the High Madrasah Examination conducted by the Dacca Board, 495 students appeared and of these 265 were sucessful. It will be seen from above that the number of new scheme madrasahs has increased in the province.

The Government of Assam has introduced the reformed madrasah course of the Dacca Board in Government madrasah, Sylhet, with effect from the year under review. The Government of Bengal agreed to allow a representative of the Assam madrasah on the Board and the Principal of the Sylhet Government Madrasah was nominated by the Director of Public Instruction, Assam, to be a member of the Board. In the Junior Madrasah Examination held in November 1934 2,838 candidates appeared, of whom 2,285 passed. During the year under review two additional scholarships of the value of Rs. 5 per mensem each tenable for 4 years were created for award to the successful candidates in the Junior Madrasah Examination. A set of revised rules regulating the conduct of Junior Madrasah Examination was sanctioned in the year under review. The Title classes in Fiqh and Usul Group in the Calcutta Madrasah continued as a temporary measure as in the previous year. Of the 1,090 candidates who appeared during the period in the different examinations conducted by the Central Madrasah Examination Board, 507 were declared to have passed.

(*iii*) *Maktabs.*—In the year under review the number of maktabs fell from 26,743 to 26,649, of which 17,359 were for boys and 9,290 for girls. But the number of pupils reading in maktabs rose during the period from 931,765 to 965,987; of the total number of pupils 675,778 were boys and 290,209 were girls. The corresponding numbers in the previous year were 647,786 and 283,979 respectively. The total cost of maintaining maktabs fell in the period under report from Rs. 21,79,842 to Rs. 21,56,542 and the amount of expenditure met from public funds rose from Rs. 10,92,218 to Rs. 11,08,729.

(*iv*) *Quoran schools.*—The number of Quoran schools or unsecularised maktabs rose during the year under review from 359 to 364; these schools were attended by 9,875 pupils as against 8,451 pupils in the year preceding.

(*v*) *Muallim-training schools.*—The number of muallim-training schools which are intended to train maktab teachers remained stationary at 6, namely, 1 in the Burdwan Division, 3 in the Presidency Division, 1 in the Chittagong Division and 1 in the Rajshahi Division. All these schools are managed by Government; they had 167 teachers against 166 in the previous year. The number of schools for training maktab teachers is inadequate in proportion to the number of maktabs and their increased enrolment.

3. **Education of Muhammadan girls.**—During the period under review the number of Muhammadan girls reading in all classes of recognised schools in the Presidency rose from 355,894 to 376,231. Of the total number 27 were in colleges, 253 were in the high stage, 479 were in the middle stage, 373,741 were in the primary stage and 1,731 were in special schools; the corresponding numbers in the previous year were 20,210,422, 354,083 and 1,159 respectively. During the year under review the scheme for the improvement of Muslim female education at a cost of Rs. 12,600 referred to in the previous year's report was sanctioned.

4. **Special facilities.**—For the encouragement of Moslem education in the Presidency the following facilities have been provided by Government, namely, reservation of seats in favour of Muslim students in Government and Government-aided schools, grant of special scholarships and stipends to Muslim students and of free-studentships up to a limit of 15 per cent. of their own enrolment, and 50 per cent. higher grant to recognised maktabs.

5. **Advisory Committee.**—The report of the Muslim Education Advisory Committee appointed by Government in 1931 was submitted to Government in November 1934. It was published for general information with Government Resolution No. 3017 Edn., dated 30th November 1934. It is now under the consideration of the department.

6. **Chiefs and Nobles.**—There is no special institution in Bengal for the education of the sons and wards of chiefs and nobles. But there are special arrangements, as stated in previous reports, in the Nawab Bahadur's Institution at Murshidabad for education of the boys of the Nizamat family. These boys put up in a separate hostel which is exclusively meant for them, under the supervision of the Headmaster who is assisted by an Ataliq. The number of Nizamat boys under instruction on 31st March 1935 was 26 against the same number in the previous year. The maintenance of the hostel reserved for Nizamat boys cost Government Rs. 5,521 during the year against Rs. 4,984 in the previous year.

7. **Education of the children of backward classes.**—The statistics given below show the number of boys and girls of backward classes that were under instruction in various types of schools and colleges in Bengal on 31st March 1935:—

Class of institution.	Boys.	Girls.	Total.
Arts colleges	1,590	13	1,603
Professional colleges	306	1	307
Secondary and primary schools	370,903	80,504	451,407
Special schools	7,967	380	8,347
Unrecognised schools	7,606	2,175	9,781
Total ..	388,462	83,073	471,535

The corresponding figures on the same date of the previous year were 384,309, 77,985 and 462,294 respectively. In the succeeding paragraphs a brief account of the educational progress achieved by the children of aboriginal and non-aboriginal backward classes during the year under review in each division of the Presidency is given separately.

(*i*) *Calcutta.*— During the year under review the number of primary schools meant exclusively for the sons and wards of backward communities fell from 31 to 27 including 2 for girls. The number of pupils attending these schools fell from 1,240 to 1,044. Of the 27 schools, 7 were managed by Christian missions and 20 by Hindu missions. For the maintenance of these schools an amount of Rs. 2,457 was met from public funds. The Harijan Uthan Society managed an industrial school for boys and girls coming off from backward classes for the upkeep of which the Society received a grant of Rs. 1,250 from Corporation funds; the enrolment of this school increased from 98 to 180 during the year.

(*ii*) *Presidency Division (outside Calcutta).*—In the year under report there were 100,966 boys and 18,933 girls of the educationally backward classes under instruction against 97,268 and 16,789 respectively in the year preceding. Pupils of the Namasudra, Pod, Rajbanshi, Jogi,Kulu, Muchi, Bagdi, Tanti and Kapali castes form the bulk of the backward classes; Namasudras, Pod and Kapalis being comparatively the more advanced of these classes. The number of schools specially intended for the education of backward classes in the division rose from 830 to 840 during the year under review of which 11 were high, 58 middle and the rest were primary; three of these primary schools were maintained as before by the Sussex Trust Fund.

(*iii*) *Burdwan Division.*—The Santhals constitute the bulk of the aboriginal population of the division. The total number of pupils of the educationally backward classes under instruction in all kinds of schools on the 31st March 1935 was 134,206 against 133,056 in the previous year in the division. There were several free primary schools chiefly intended for the education of Santhals. In Birbhum the Board of Santhal Education was merged into the district School Board in the year under review. As before Midnapore had a special Assistant Sub-Inspector to look after Santhal education in the whole district. The Santhal High School at Bhimpore under the management of the American Baptist Mission had 180 pupils on its rolls on the 31st March 1935 against 223 pupils in the year preceding. The expenditure of this school during the year increased from Rs. 13,196 to Rs. 15,000 towards which Provincial revenues contributed Rs. 2,520 as in the previous year. The middle vernacular school for girls at Bimpore enrolled 134 pupils on the 31st March 1935 against 83 of the previous year. The school cost an amount of Rs. 2,277 against Rs. 2,237 in the previous year; Provincial revenues contributed Rs. 720 as in the previous year towards the total cost. The Industrial School for females at Bhimpore enrolled 16 pupils on 31st March 1935; the expenditure amounting to Rs. 200 borne entirely by mission funds. The girls here are showing a good deal of interest in lace making, knitting and other useful manual works. There were altogether 258 Santhal primary schools with 7,390 pupils on 31st March 1935 against 259 schools with 7,437 pupils in the year preceding. The total cost of primary education for Santhals amounted to Rs.41,870 towards which Provincial revenues contributed Rs. 32,626. There was one peripatetic weaving school in the district of Birbhum meant chiefly

for the Sonthals. Its enrolment fell from 10 to 8 and the total cost was Rs. 1,546 against Rs.1,632 in the preceding year. The cost was entirely met from Provincial revenues.

(*iv*) *Dacca Division.*—Boys and girls of backward classes reading in the schools of Dacca Division increased by 4,617 and 3,186 respectively in the year under review. There were 9 primary schools for Muchis, 3 for Methars, 21 for fishermen and 41 for aboriginal tribes comprising altogether 74 as compared with 70 in the previous year. High schools meant for Kapalis and Namasudras decreased from 9 to 8 and middle schools meant for Namasudras declined from 29 to 25. The number of primary schools intended for the Magh settlers in the Colonisation area of the district of Bakarganj was 12 as in the previous year which had 68 pupils against 79 in 1933-34.

(*v*) *Chittagong Division.*—The number of boys of backward classes receiving instruction in the various classes of schools in the division fell during the period by 7,647 and 1,754 respectively. The fall of pupils was reported to have been due to the omission of the Mahisya and other classes of pupils in the year of review in accordance with the revised schedule; they were included among the advanced classes of Hindus. The whole of the district of Chittagong Hill Tracts is a backward area inhabited by 15 hill tribes. Number of aboriginal pupils under instruction rose from 2,878 to 3,456, of whom 3,184 were boys and 272 were girls. There were in the Chittagong Hill Tracts one high, four middle, one training and 152 primary schools for boys and 2 primary schools for girls, besides 38 Keyang schools for religious instruction to Buddhists against the same number in the year preceding. The four middle schools, 130 primary schools for boys and 2 primary schools for girls are aided by public funds and the rest are unaided. In the Cox's Bazar subdivision there were 5 Burmese schools, all managed by Government which had 807 Magh pupils against 248 in the previous year. These schools during the year cost Rs. 3,556 wholly contributed by Government. Besides these there were one aided middle English school at Ramoo and two aided primary schools (one for boys and the other for girls) chiefly intended for the Burmese pupils within the Cox's Bazar Municipal limits.

(*vi*) *Rajshahi Division.*— Rajbansis, Namasudras, Malos, Sonthals and Oraons are the main educationally backward communities in this division. Boys and girls of backward classes reading in the schools of Rajshahi Division increased by 2,881 and 220 respectively in the year under report. There were 2 Boards of Sonthal Education, during the year under review, one at Rangpur and the other at Malda, against 3 in the preceding year; the decrease is attributed to the abolition of the Board of Sonthal Education at Dinajpur. The two Boards had 41 primary schools under their control and 32 schools under the Board at Dinajpur with 1,181 pupils were consequently transferred under the District School Board of Dinajpur established in the year under report. The number of Sonthal pupils attending these schools rose from 2,420 to 2,568. Schools intended for hill tribes and aboriginal races other than Sonthals in the district of Jalpaiguri numbered 24 (2 middle English and 22 primary) with 923 pupils against 19 schools with 584 pupils. These schools were subsidised from the District Fund and participated in the 1 per cent. Khasmahal grant.

8. **Education of criminal tribes.**—The industrial school maintained by the Salvation Army at Nilphamari for the education of the children of the Karwal nuts had 33 boys and 36 girls on 31st March 1935 against 36 boys and the same number of girls in the previous year. Instruction is imparted in agriculture, weaving and knitting as well as in ordinary primary school subjects. The school is a residential one and there are separate hostels for boys and girls. The total cost of maintenance of the school amounted to Rs. 10,108 against Rs. 11,000 in the previous year which was met entirely from Provincial revenues. As in the previous year there was only 1 school of this category at Kaktengair in the Kishoregunj subdivision of the Mymensingh district with 21 pupils against 25 in 1933-34. The upkeep of the school cost Rs. 237 which was met entirely from public funds.

The Reformatory and Industrial Schools, Alipore, had 222 inmates on 31st March 1935 as compared with 201 in the previous year. The upkeep of the institution cost Rs. 48,184 which was wholly provided from Provincial revenues. The school has provision for teaching weaving, tailoring, carpentry, and smith's work besides the primary syllabus. After the introduction of improved diet the general health of boys has improved much. A new baking oven has been constructed and a Radio installation has been made by the close of the year under report. The regular entertainment in the evening by the Radio has made the life of boys under detention less irksome. It will be interesting to note that in accordance with a scheme approved by Government, 11 boys were allowed to go home unattended by any escort for 1 or 2 days in the last quarter of their detention and they returned to school in time.

The Borstal Institution at Bankura which educates juvenile offenders of ages 15-21 had 277 pupils on the 31st March 1935 against 188 on the corresponding date of the previous year. The school is under the immediate supervision of a Deputy Superintendent of Police and teaches various crafts besides general subjects. A sum of Rs. 21,638 was spent for the upkeep of the school which was met entirely from Provincial revenues.

9. **Education of defectives.**—The Children's House, Kurseong, which adopts special methods of training for mentally and physically defective European and Anglo-Indian children registered 23 pupils on 31st March 1935 as compared with 24 pupils in the previous year. Stipends amounting to Rs. 2,520 were awarded by the department during the year under review for the maintenance and education of children living in the House. The Blind School at Behala (district 24-Parganas) has 83 pupils, including 20 girls, in 1934-35. The total expenditure of the school was Rs. 30,932 of which Rs. 7,506 came from Provincial revenues. The Deaf and Dumb School at Calcutta had 224 pupils, including 24 girls, on its rolls on 31st March 1935 against 213 (including 55 girls) in the year preceding. As in the previous year there was 3 aided deaf and dumb schools—one at each of the district headquarters of Dacca, Mymensingh, and Bakargunj with 61 pupils in them (including 7 girls). The maintenance of these schools cost Rs. 8,753 of which Rs. 3,499 was borne by public funds. The Deaf and Dumb School at Chittagong had 18 pupils (including 4 girls) on 31st March 1935 and the total cost for the upkeep of the institution was Rs. 1,592 of which Rs. 648 was borne by Provincial revenues. The Rajshahi Deaf and Dumb School had 15 pupils including 4 girls on its rolls. Of the total expenditure of Rs. 505 on this school Rs. 275 came from district funds and Rs. 230 from the Rajshahi Municipality.

A school for defective children has, as reported previously, been started at Jhargram in Midnapore, by the Bodhan Samity, a registered association, which had 15 pupils including 4 girls. The cost of maintenance was Rs. 5,527of which Rs. 902 was borne by public funds.

10. **Education of factory and colliery children.**—During the year under report there were 6 primary schools (with 547 boys and 7 girls against the same number of schools with 520 boys and 9 girls) exclusively intended for the education of the factory children. The Hindi primary schools and maktabs in the mill and factory areas of Tittagarh, Ichapur and Kankinara are also meant for them. For the children of the Madrasi mill hands there is a Telegu class attached to the departmentally aided primary school at Titagarh. The Rifle and Metal Factories at Ichapur maintained 2 primary schools attended by 387 pupils. The sum of Rs. 2,600 was paid from Provincial revenues and Rs. 2,780 was given by the Military Department for the maintenance of these schools.

In the coalmine area of the Burdwan district there were 12 colliery primary schools with 355 pupils on the 31st March 1935 against 9 with 238 pupils of the preceding year. Two such schools—one a Hindi and the other a Telegu primary school—were maintained by Banga Lakshmi Cotton Mills, Ltd., district Hooghly. These two schools also received grants from public funds. The authorities of the Bansberia mills maintained 3 primary schools for Hindi, Telegu and Urdu speaking boys of the mill hands entirely at their own cost. Another primary school is maintained by Railway authorities at Khargpur which is attended by the children of workshop labourers; it had 220 pupils on 31st March 1935 as compared with 192 in the previous year.

11. **Tea-garden schools.**—In the Jalpaiguri and Darjeeling districts there were 153 tea-garden schools with 3,658 pupils in 1934-35 against 171 schools and 3,479 pupils in 1933-34. The total cost of these schools was Rs. 24,072 towards which public funds contributed Rs. 10,747.

12. **Education of Jains.**—Altogether 1,151 Jain students were returned on 31st March 1935 from various grades of educational institutions in the Presidency as compared with 642 pupils in the corresponding date of the previous year. Of the total number of pupils 1,116 belonged to primary and secondary schools and 35 to colleges.

13. **Cantonment schools.**—In the cantonment areas of Barrackpore (district 24-Parganas) there were 9 primary and secondary schools against 10 in the previous year which were attended by 870 pupils as compared with 773 in the year before. For the maintenance of these schools an amount of Rs. 23,569 was spent during the year under review of which Rs 8,325 was met from Provincial revenues. There were on 31st March 1935, 3 primary schools—one in the Jalapahar and two in Lebong Cantonment areas (Darjeeling district). They had 130 pupils against 94 in the year preceding . The total cost of these schools was Rs. 2,213 of which Rs. 1,664 came from the Cantonment funds.

CHAPTER X.

Unrecognised Institutions.

1. There are certain educational institutions which do not follow the curricula prescribed by any constituted educational authority. These may be entitled unrecognised institutions. Various types of

indigenous schools, newly-started primary schools and maktabs, undeveloped secondary schools, tols, Koran schools and Kyangs or Buddhist monastic schools, are included in the category of the unrecognised schools. These schools owe their existence in some cases to the enterprise of their founder teachers; but in many cases their origin can be traced to party-factions. Usually these institutions are poor in their equipment, accomodation teaching and discipline. But some of them which have deliberately held aloof from the educational system of the province are doing admirable work on their own way. The most noteworthy of these are the group of institutions founded by Dr. Rabindra Nath Tagore at Bolpur and Surul in the district of Birbhum which have attracted the attention of educationists in Europe and America by the attempt that is made there to give prominence to the artistic side of education and to the best Indian traditions with the latest systems of western education. At Surul especially an interesting experiment is being tried to devise a system of education peculiarly suited to the needs of the village children. Reference should also be made to the Kabindra College, Goila, Bakarganj, which specializes in higher Sanskrit studies, including Aurveda and Hindu Philosophy, and to the Mahakali Pathsala, Mymensingh, a girls' school which imparts general instruction besides religious teaching on orthodox lines. In the year under review the total number of unrecognised schools in the Presidency fell from 1,588 to 1,419 and their enrolment from 67,171 to 64,427; of the total roll number 48,637 were boys and 15,790 were girls.

CHAPTER XI.

Residence of Students and their Physical and Moral Training.

1. **Hostels.**—During the year ending 31st March 1935 the number of students residing in hostels and boarding houses attached to educational institutions in the Presidency rose from 29,433 to 30,675. Of the total number of boarders 25,628 lived in hostels meant for Indians, and 5,047 occupied boarding houses intended for Europeans and Anglo-Indians. Of the Indian boarders 22,603 were males and 3,025 were females. Among Euronean and Anglo-Indian boarders 2,992 were boys and 2,055 were girls. It was decided during the period under review to construct a hostel for the Moslem students of Krishnagar College and to include necessary provision in the budget for 1935-36.

With a view to make hostels ultimately self-supporting the grants admissible for superintendence were subjected to a 30 per cent. cut during the year under review, but this reduction adversely affected the efficiency of supervision exercised over the boarders.

2. **Messes.**—Messes (including non-collegiate hostels) administered by the Students' Residence Committee of Calcutta University numbered 35 during the year under report which accommodated 1,884 boarders. On account of economic depression the rate of seat rents in all under-graduate hostels under the control of Calcutta University has been reduced since 1932-33 by rupee one. The number of messes managed by the Board of Intermediate and Secondary Education, Dacca, during the period was 24, which were occupied by 615 students

of different schools and colleges in the town. Both in Calcutta and Dacca the bulk of the expenses of hostels occupied by the students of backward communities was borne by Government.

3. **Physical education.**—There is evidence everywhere that greater attention is now being paid to the subject which is regarded by boys and girls as an essential part of the school work. But the progress has been slow for want of playing grounds, absence of trained instructors and apparatus, and of provision for a midday meal for students. The Young Women's Christian Association was paid, as previously a Government grant of Rs. 200 a month for maintenance of the services of a Physical Directress, who has given valuable assistance to girls' schools in the matter of organising games and sports.

The temporary physical training centre at Ballygunge completed its third session in March 1935; of the 21 students who joined the class during the session, 18 completed the course and were awarded diplomas. During the period under review a sum of Rs. 11,180 was sanctioned by Government, for the objects noted below in connection with the improvement of physical education:—

Objects.	Allotment.	No. of teachers trained.	No. of schools aided.	No. of play centres and aided clubs.	No. of sports associations aided.
	Rs.				
(*i*) Training of teachers of Middle English schools ..	1,000	72	..	..	..
(*ii*) Grants to girls' schools ..	1,500	..	24	..	..
(*iii*) Grants to play centres and clubs	5,000	..	..	71	..
(*iv*) Grants to inter-schools competitions	2,000	..	..	..	14
(*v*) Stipends to 4 students deputed by colleges to the physical training centre ..	720	.	..	..	..
(*vi*) Grants towards the salaries of 4 college instructors deputed to the physical training centre ..	960	..	..	..	..

As stated in previous reports, football continued to receive the greatest attention; other western games like tennis, hockey and badminton were also played in urban areas. Indigenous games, such as hadudu, kapati, &c., are preferred in the rural areas, on account of their inexpensive nature. Swimming and rowing are also encouraged in those places, where the necessary funds and organisations are available. Drill is being gradually replaced by physical exercises. Many schools have introduced folk dances and folk songs in their programme of physical education. The Bratachari organisation was mainly instrumental in giving an impetus to the revival of the folk dances and folk

songs All these activities are reported to have made school life more cheerful than before. Most of the well-managed high and middle English schools now realise a small game fee for the provision of requisite apparatus for physical education. It is gratifying to note that some Municipal Boards in the Presidency Division sanctioned small grants during the period under review towards the purchase of physical training apparatus for boys of primary schools.

4. **Boy Scouts.**—During the scout year 1934, 969 Scouts, 649 Cubs, 91 Rover Scouts and 89 Officers or a total personnel of 1,798 were registered. In addition, some of the old troops, which were in abeyance, were revived. The grand total at the end of the year stood at 12,100, showing a net increase of 1,770 during the period. The Annual Government grant of Rs. 6,000 was paid as before to the Boys Scout Association, Bengal, for the encouragement of Boy Scout movement in the Presidency. A sum of Rs. 4,000 was also distributed to Government and non-Government schools for the establishment and maintenance of Boy Scout Troops in them. Administrative approval has been accorded by Government to the payment of a special non-recurring grant of Rs. 2,500 to the Bengal Boy Scout Association for the establishment of a permanent camp site at Ganganagar. The services of the Bengal Rovers, who were sent to Monghyr after the earthquake to assist in the distribution of foodstuffs, medicines, and clothing, were greatly appreciated.

5. **Girl Guides.**—Girl Guide companies are reported to be in existence in most of the well-managed high and middle English schools for girls in the Presidency, but guiding has not made appreciable progress anywhere except in schools managed by Government and mission authorities.

6. **Medical supervision.**—No funds were available during the year under review for giving effect to the revised scheme of medical examination of the pupils of Government high English schools in the Presidency Division. The scheme of medical inspection of the pupils of secondary schools for boys in the city of Calcutta was in operation as in the previous year. Of the 5,560 boys examined by the doctors more than half had eye and throat defects. The Medical Board attached to the Students' Welfare Committee of Calcutta University examined during the period the health of about 1,800 students belonging to 4 colleges and 2 high English schools in Calcutta and issued 1,100 defect cards with recommendations suggested for remedying the defects of diseases discovered. A disquieting feature of the findings of medical inspectors is the increase in the incidence of malnutrition among school children.

7. **Hygiene.**—Lessons in Hygiene were taught as previously in all classes of schools, although it is a compulsory subject for classes III to VIII only. Hygiene lessons will be more effective, if they are given in hygienic environment and by teachers who are themselves hygienically conscious. Precepts are seldom supported now by examples. Officers of the Public Health Department are reported to have given valuable lectures to students at some centres with the help of charts, lantern slides and cinemas.

8. **Discipline.**—The state of discipline during the period was generally satisfactory. The measures adopted for the improvement of discipline included, as previously, delivery of lectures by peripatetic

lecturers, ward system of supervision by teachers, holding of debates where the pamphlets issued by the Publicity Board were explained and discussed, and encouragement of games and other forms of physical activities.

The tutorial system of supervision introduced in the first grade Government colleges in the preceding year was extended to all colleges maintained by Government including Islamic Intermediate Colleges at Dacca and Chittagong. The results achieved so far are said to be generally satisfactory.

9. **Religious and moral instruction.**—Religious instruction continues to be given in denominational schools like tols, madrasahs, maktabs, and mission schools; but the instruction given is only of a formal character. On the other hand moral instruction given in general schools is of too general a character to make an effective appeal to students. In the matter of teaching morality the influence of the teacher always counts for much; first aid classes, poor funds, scouting and debating clubs can do much in the teaching of moral qualities.

10. **National school.**—During the year 1934-35 there were in the Presidency 4 national schools with 932 pupils as compared with 9 schools with 1,197 pupils in the previous year. From the reports received by the department it is evident that the influence of these schools is steadily diminishing.

CHAPTER XII.

Conferences and Committees.

1. The Moslem Education Committee which was constituted in 1931 to advise Government with regard to the policy to be pursued for the advancement of Moslem education in the Presidency submitted its report during the year under review. This report which was published for general information in November 1934, is now under the consideration of the department.

2. A big Conference of Inspecting Officers and Head Masters of high English schools was held under the Presidency of the Divisional Inspector of Schools at Dacca in July 1934; the Additional District Magistrate and the Principal, Teachers' Training College, Dacca, also took part in its deliberations. The most noteworthy resolutions adopted by the meeting were those which related to (1) the inauguration of inter-school associations as a means of improving physical education and discipline in schools, and (2) the holding of an Education Week (which was celebrated after the close of the period under review). Educational conferences were also organised at some centres by Mr. P. J. Griffiths, District Magistrate, Midnapore, in which the meetings were addressed by 3 officers of the Education Department. These meetings served a useful purpose, inasmuch as they popularised primary education. The conferences held by District Inspectors of Schools discussed among other things questions regarding wastage and stagnation in primary schools, and starting of schools in unschooled areas; while the informal conferences of primary school teachers held by Sub-Inspectors of Schools considered particularly

matters relating to the improvement of the economic situation and restricted jute cultivation in the neighbouring areas. An important association called the "North Bengal Education League" was started during the period in the Rajshahi Division the main object of which is the spread of education.

3. The Bengal Women's Education League held its ninth annual session in Calcutta in February 1935 and passed the following noteworthy resolutions:—

The Conference urges—

(i) That the syllabus for rural schools be revised and then forwarded to the Education Department for consideration.

(ii) That the preparation of suitable text books for teachers and pupils of those schools be undertaken by the Education League.

(iii) That steps be taken to increase the facilities for the training of teachers for rural schools.

(iv) The Conference recommends to the consideration of the Education League the revision of the physical education syllabus for girls.

(v) The Conference asks the Education League to forward to the Director of Public Instruction, Bengal, a summary of its discussions on the alternatives to the Matriculation Examination for girls.

(vi) It is resolved that schools be asked to specialise in the making of simple co-operative books and portfolios as an addition to the school library and of educative games that can be used in class.

4. In pursuance of a resolution adopted by the Education Conference, which met at Government House in November 1933, the Department undertook to make a survey of secondary schools in Bengal in order to find out the actual needs of the Presidency in the matter and to devise ways and means to meet them; but the survey could not be completed during the year under report.

5. The All-Bengal Teachers' Association held its fourteenth session at Dacca in April 1935 under the Presidentship of Mr. A. F. Rahman, B. A. (Oxon.), M. L. C., Vice-Chancellor, Dacca University, in which questions concerning improvement of secondary education and pay and prospects of teachers were chiefly discussed.

CHAPTER XIII.

Text Book Committee.

1. During the year under report, two members of the Provincial Text Book Committee resigned their membership and one member died.

2. Fifteeen hundred and twelve books on the subjects called for in 1934 for secondary schools were received for consideration by the Committee. Of these, 5 were rejected at the preliminary examination

and the rest were circulated to regular members and co-opted members for scrutiny. In view of the large number of books received for review, the services of 43 co-opted members had to be requisitioned to complete the work of examination within the short time at the disposal of the Text Book Committee. As experts had to be employed for the examination of books received by the Committee, the services of 17 regular members only could be utilised for the purpose. Six hundred and sixty-nine books were recommended by the Committee for approval by the Director of Public Instruction, Bengal, for use in Government and Government-aided secondary schools in this Presidency.

3. During the year under review, the new system of levying fees on books for examination and of paying remuneration to reviewers was introduced. A sum of Rs. 18,749 was realised as fees from authors and publishers. The amount of remuneration paid to reviewers was Rs. 13,477.

4. The General Committee of the Provincial Text Book Committee at its meeting held on the 4th September 1934, accepted with certain modifications the recommendations of the Sub-Committees appointed to revise syllabuses of studies on Hygiene for classes VII and VIII of high schools for boys and on Bengali grammar for classes III-VIII of secondary schools for boys and girls in Bengal. These recommendations were being considered by the Director of Public Instruction, Bengal.

5. Babu Braja Mohan Dutt's prize for Indian ladies of the value of Rs. 45 for the year 1933-34 was awarded to Sreemati Prativamayee Gupta, Calcutta. The following subject was selected for the year 1934-35 :—

Co-education in (a) primary schools; (b) secondary schools; (c) University.

CHAPTER XIV.

Education in the Legislative Council.

It is worthy of note that no serious attempt was made by members of the Bengal Legislative Council in 1934-35 to effect drastic reductions in the Education Budget, although motions were brought proposing small cuts in respect of one or two items of the budget provision. The Council session in March 1934 afforded, as usual, opportunities to members to discuss among other things, questions relating to the reform of Calcutta University, dual control of secondary education, higher education of women, delay in the enforcement of the Bengal Rural Primary Education Act, 1930, proportionately smaller expenditure on primary education, inadequacy of present arrangements for imparting vocational education, and undue encouragement given to literary education. The question of the education of the scheduled castes was discussed at considerable length, when the attention of Government was

drawn to the proceedings of a conference of the scheduled castes held at Bongaon in October 1934, in which a resolution was unanimously adopted requesting Government to set apart a sum of Rs. 10 lakhs annually for education of the children of the scheduled castes and to appoint a Special Director of Education to look after their education. In many cases questions were asked by members with a view to elicit information about particular institutions and officers. Of the questions of a general character the following deserve mention: (1) Grants to schools functioning in places of the defunct circle schools, (2) curricula for boys and girls reading in secondary schools, and (3) Government grants to district boards for payment to trained and untrained teachers of primary schools. After all it was quite evident that members of the Legislative Council continued to take a keen interest in the affairs of the Education Department.

W. A. JENKINS,

Director of Public Instruction, Bengal (offg.).

Statement showing the gauge readings at Dacca Waterworks Station on the river Buriganga for the week ending 4th July 1936.

Date.	At highest water.		At lowest water.		Commencement of—		Remarks.	
	Time.	Reading.	Time.	Reading.	Ebb tide.	Flow tide.	7 a.m.	5 p.m.
1936.								
28th June ..	18-0	12·8	6-0	12·6	18-12	6-13	12·75	12·65
29th „ ..	Tide is not perceptible.						12·8	12·7
30th „ ..							12·65	12·5
1st July ..							12·3	12·15
2nd „ ..							12·2	12·3
3rd „ ..							12·5	12·4
4th „ ..							12·6	12·5

Notable high and low water levels of previous years.

		Taken at high tide.			Taken at low tide.
27th August	1906 ..	70·5	23rd February	1907 ..	51·06
5th September	1909 ..	66 86	13th „	1908 ..	51·06
10th August	1910 ..	69·86	12th March	1912 ..	51·06
1st „	1911 ..	68·46	6th „	1914 ..	50·60
13th „	1912 ..	67·16	22nd February	1915 ..	50·30
31st „	1915 ..	69·7	15th „	1916 ..	50·60
8th „	1916 ..	68·1	3rd March	1917 ..	51·0
12th „	1917 ..	67·1	21st February	1918 ..	51·40
13th „	1918 ..	69·12	26th „	1919 ..	50·4
2nd „	1919 ..	66·8	18th „	1920 ..	50·9
8th September	1920 ..	66·9	19th „	1921 ..	50·9
28th July	1921 ..	68 4	8th March	1922 ..	51·05
10th August	1922 ..	68·00	14th „	1923 ..	50·8
31st July	1923 ..	66·15	16th February	1924 ..	50·50
29th August	1924 .	68·82	5th March	1925 ..	50·9
8th September	1925 .	68·52	9th February	1926 ..	2·2
15th August	1926 .	19 6	27th „	1927 ..	2 10
17th September	1927 .	18·70	16th „	1928 ..	2·2
22nd August	1928 ..	20·0	21st „	1929 ..	2·0
13th July	1929 ..	17·8	24th „	1930 ..	2·3
12th September	1930 ..	18·65	28th „	1931 ..	2·2
16th August	1931 ..	21·7	18th „	1932 ..	1·8
6th September	1932 ..	18·5	6th „	1933 ..	2·10
7th „	1933 ..	17·80	26th March	1934 ..	2·40
23rd August	1934 ..	19·35	15th February	1935 ..	1·70
1st September	1935 .	19 80			

N.B.—Zero of the gauge at Dacca Waterworks prior to 11 a.m on the 8th January 1926= —48·51 with reference to P. W. D. datum.

Zero of the gauge at Dacca Waterworks since 11 a m. of the 8th January 1926=0·00 with reference to P. W. D. datum.

M. K. BHATTACHARJEE, *Executive Engineer,*
Khulna Division.

Khulna, the 11th July 1936.

Statement showing the gauge readings at Dacca Waterworks Station on the river Buriganga for the week ending 11th July 1936.

Date.	At highest water.		At lowest water.		Commencement of—		Remarks.	
	Time.	Reading.	Time.	Reading.	Ebb tide.	Flow tide.	7 a.m.	5 p.m.
1936.								
5th July ..							12·55	12·6
6th „ ..							12·45	12·55
7th „ ..							12·6	12·5
8th „ ..	Tide is not perceptible.						12·4	12·55
9th „ ..							12·55	12·4
10th „ ..							12·55	12·75
11th „ ..							12·8	13·0

Notable high and low water-levels of previous years.

		Taken at high tide.				Taken at low tide.
27th August	1906 ..	70·5	23rd February	1907 ..	51·06	
5th September	1909 ..	66·86	13th „	1908 ..	51·06	
10th August	1910 ..	69·86	12th March	1912 ..	51·06	
1st „	1911 ..	68·46	6th „	1914 ..	50·60	
13th „	1912 ..	67·16	22nd February	1915 ..	50·30	
31st „	1915 ..	69·7	15th „	1916 ..	50·60	
8th „	1916 ..	68·1	3rd March	1917 ..	51·0	
12th „	1917 ..	67·1	21st February	1918 ..	51·40	
13th „	1918 ..	69·12	26th „	1919 ..	50·4	
2nd „	1919 ..	66·8	18th „	1920 ..	50·9	
8th September	1920 ..	36·9	19th „	1921 ..	50·9	
28th July	1921 ..	68·4	8th March	1922 ..	51·05	
10th August	1922 ..	68·00	14th „	1923 ..	50·8	
31st July	1923 ..	66·15	16th February	1924 ..	50·50	
29th August	1924 ..	68·82	5th March	1925 ..	50·9	
8th September	1925 ..	68·52	9th February	1926 ..	2·2	
15th August	1926 ..	19·6	27th „	1927 ..	2·10	
17th September	1927 ..	18·70	16th „	1928 ..	2·2	
22nd August	1928 ..	20·0	21st „	1929 ..	2·0	
13th July	1929 ..	17·8	24th „	1930 ..	2·3	
12th September	1930 ..	18·65	28th „	1931 ..	2·2	
16th August	1931 ..	21·7	18th „	1932 ..	1·8	
6th September	1932 ..	18·5	6th „	1933 ..	2·10	
7th „	1933 ..	17·80	26th March	1934 ..	2·40	
23rd August	1934 ..	19·35	15th February	1935 ..	1·70	
1st September	1935 ..	19·80				

N.B.—Zero of the gauge at Dacca Waterworks prior to 11 a.m. on the 8th January 1926= —48·51 with reference to P W. D. datum.

Zero of the gauge at Dacca Waterworks since 11 a.m. of the 8th January 1926=0·00 with reference to P W. D. datum.

M K. BHATTACHARJEE, *Executive Engineer,*
Khulna Division.

Khulna, the 18th July 1936.

Statement of weekly gauge readings on the river Ganges at Rampur Boalia for the week ending the 11th July 1936.

Date.	Hour.	Height of surface above P. W. D. datum.	Height of surface above P. W. D. datum on the same date last year.	Remarks.
1936.				Value of B.M. on Rajshahi College step = 64·73 P. W. D.
5th July	7 a.m.	49·30	42·95	Zero of gauge = 0·00 P. W. D.
6th „	7 „	49·85	43·95	
7th „	7 „	50·60	44·65	
8th „	7 „	51·30	45·35	
9th „	7 „	52·40	45·59	
10th „	7 „	53·55	46·49	
11th „	7 „	54·50	46·79	

Highest recorded level on 26-8-1879 64·24.
Lowest recorded level on 24-4 1931 32·05.

S. GUPTA, *Subdivisional Officer,*
Irrigation Department, Rajshahi.

Rampur Boalia, the 11th July 1936.

DEPARTMENT OF AGRICULTURE, BENGAL.

Dacca, the 13th July 1936.

Monthly Weather and Crop Report of Bengal for June 1936.

I. *Character of the season.*—During the month under review, the rainfall was below the normal throughout the Presidency except only in 24-Parganas, Bankura, Midnapore, Howrah and the Tripura State, where the fall was in excess of the average. The usual rainfall statement is appended.

II. *Progress of agricultural operations.*—Preparatory tillage for and sowing of winter paddy in seed-beds continued favourably. Reaping of low land jute commenced in places. Weeding of autumn crops was in progress.

III. *State of standing crops.*—Condition of standing crops was reported to be generally fair.

IV. *Prospects and probable outturn.*—The prospects of standing autumn crops and deep-water paddy were reported to be generally promising.

V. *Damage to standing crops.*—No appreciable damage to standing crops was reported from any part of the province.

VI. *Condition of agricultural stock.*—The condition of live-stock was on the whole fair. Sporadic cases of cattle-disease, however, were reported from thirteen districts of the Presidency and from the States of Cooch Behar and Tripura.

VII. *Failure of pasturage and fodder.*—Insufficiency of fodder was reported from parts of 24-Parganas, Burdwan and Birbhum.

VIII. *Prices of food-grains.*—During the second fortnight of the month, the retail prices of common rice of the cheapest quality rose in seven districts, fell in six and remained stationary in the rest of the Presidency. The prices ranged from 9 seers per rupee in Darjeeling to 12½ seers per rupee in Jessore.

IX. *The condition of agricultural population.*—Condition of agricultural population is, on the whole, fair except in parts of 24-Parganas, Nadia, Murshidabad, Khulna, Burdwan, Birbhum, Bankura and Hooghly, where distress continues.

S ABDULLAH,

for *Director of Agriculture, Bengal.*

Statement showing the normal and actual rainfall in each district during June 1936.

Division.	District.	Normal district rainfall for the month of June.	Actual district rainfall for the month of June 1936.	Variation from the normal.
		Inches.	Inches.	Inches.
Presidency ..	24-Parganas ..	11·57	13 12	+1·55
	Nadia ..	9·95	8 43	−1·52
	Murshidabad ..	10·52	8·78	−1·74
	Jessore ..	11·90	8 87	−3·03
	Khulna	13·28	11·22	−2·06
Burdwan ..	Burdwan .	10·81	9·83	−0·98
	Birbhum	10 65	9 56	−1·09
	Bankura	9·89	13 25	+3·36
	Midnapore ..	11·83	15·56	+3 73
	Hooghly ..	9·90	9·46	−0·44
	Howrah ..	11·73	16·89	+5·16
Rajshahi ..	Rajshahi ..	11·30	7·32	−3·98
	Dinajpur ..	14·61	6·65	−7·96
	Jalpaiguri ..	28·25	25·64	−2·61
	Darjeeling ..	24·39	17·56	−6·83

Division.	District.	Normal district rainfall for the month of June	Actual district rainfall for the month of June 1936.	Variation from the normal.
		Inches.	Inches.	Inches.
Rajshahi—*concld.*	Rangpur ..	17 41	7 61	−9·80
	Bogra ..	11·92	6·26	−5·66
	Pabna ..	11·33	9·44	−1·89
	Malda ..	10·68	4·56	−6·12
Dacca ..	Dacca ..	14 02	12 88	−1·14
	Mymensingh ..	17·83	10 79	−7·04
	Faridpur ..	14·52	8·12	−6·40
	Bakarganj ..	18·38	14·22	−4·16
Chittagong ..	Chittagong ..	23·11	17·75	−5·36
	Tippera ..	16·01	12·85	−3·16
	Noakhali ..	21·28	11 34	−9·94
	Chittagong Hill Tracts.	19·35	12·39	−6·96
Cooch Behar ..	..	28·23	24 07	−3·56
Tripura State ..	..	15·41	17·89	+2·48

DISTRICT REPORTS ON WEATHER AND CROPS.

For the week ending on the 15th July 1936.

Summary.—During the week the rainfall was generally moderate to heavy. It has facilitated the cultivation of winter rice. Harvesting of autumn crops continues in places. Prospects of standing crops are generally satisfactory. During the week ending Saturday, the 11th July, daily average of labourers attending test relief works and the number of persons receiving gratuitous relief were 848 and 5,479, respectively, in the distressed areas of Murshidabad. In 24-Parganas, Burdwan and Birbhum 200, 1,550 and 1,380 persons were employed on test relief works on Saturday, the 11th July. In Nadia and Burdwan 2,114 and 2,000 persons also received gratuitous relief. In Hooghly 2,378 labourers were engaged on test relief works during the week ending Saturday, the 11th idem. The average price of common rice for the province has remained practically stationary as compared with that of the previous week.

Serial No.	District and subdivision.	Rainfall.	Price of common rice, in seers, per rupee.		Character of the weather, condition of crops, etc.
			This week.	Previous week.	
1	2	3	4	5	6
		Inches.			
1	24-Parganas ..	3·87	9 1/16	9½	Weather seasonable. Fodder and water are sufficient. Prospects of crops are favourable except in Baraset subdivision. Import of rice continues from East Bengal in Basirhat. 260 persons were engaged on test relief works and relief works on the last day of the week ending the 11th July. Agricultural loans also gratuitous relief were distributed during the week in Sadar, Basirhat and Diamond Harbour.
	Diamond Harbour..	2·63	9½	9½	
	Barrackpore ..	7·51	8½	9	
	Baraset ..	1·40	9	9	
	Basirhat ..	1·63	11	11	
2	Nadia ..	1·10	8½	8	Weather seasonable. Agricultural operation is going on in full swing. Rice is being imported largely in Ranaghat. Fodder and water are sufficient. Cattle-disease is reported from Nabadwip police-station. Distribution of agricultural loan is being made in Sadar, Ranaghat and Chuadanga. Gratuitous relief was given to 5 persons in Sadar on the 10th July, to 1,981 persons in Chuadanga for the week ending the 11th July, and to 128 persons in Meherpur on the 5th, 8th and 9th July 1936.
	Kushtia ..	3·19	10	10	
	Meherpur ..	5·81	11	11	
	Chuadanga ..	1·34	12	12	
	Ranaghat ..	1·83	9½	9½	
3	Murshidabad ..	3·21	10	9½	Weather seasonable. Prospects of standing crops are favourable. Fodder and water are sufficient. Cattle-disease is reported from Kandi subdivision. Rice is being imported from Dinajpur in Lalbagh subdivision. No export. Number of average daily labourers who attended the test relief centres during the week ending Saturday, the 11th July, was 848 and that of persons receiving gratuitous relief in the distressed areas was 273, 4,036 and 1,170 in Lalbagh, Kandi and Jangipur subdivisions, respectively.
	Lalbagh ..	3·47	10½	10	
	Jangipur ..	4·86	10½	10½	
	Kandi ..	2·37	9½	9½	
4	Jessore ..	4·65	11	11	Weather seasonable. Prospects of standing crops are fair. No large export or import. Fodder and water are sufficient.
	Jhenidah ..	2·06	13	13½	
	Magura ..	4·00	13	12	
	Narail ..	3·10	10	13	
	Bongaon ..	5·68	10	10	
5	Khulna ..	5·67	10	10	Weather seasonable. Fodder and water are sufficient. Cattle-disease is reported from some parts of Morrelganj police-station. Test relief works suspended.
	Satkhira ..	5·56	10½	10½	
	Bagerhat ..	2·80	8½	8½	

Serial No.	District and sub-division.	Rainfall.	Price of common rice, in seers, per rupee.		Character of the weather, condition of crops, etc.
			This week.	Previous week.	
1	2	3	4	5	6
		Inches.			
6	Burdwan ..	4·49	9½	9½	Weather seasonable. Condition of crop is favourable. Fodder is sufficient. 1,550 labourers were engaged on test relief works on 11th July 1936. 2,000 persons received gratuitous relief.
	Asansol ..	3·45	11	11	
	Katwa ..	2·72	9	9	
	Kalna ..	2·26	8½	8½	
7	Birbhum ..	2·28	10	10	Weather seasonable and sultry. Prospects of standing crops are fair. Water is sufficient but there is scarcity of fodder. 1,380 persons were employed on test relief works on preceding Saturday.
	Rampurhat ..	2·30	11	11	
8	Bankura ..	1·19	10	10	Weather hot and cloudy. Ploughing of lands and transplantation of paddy seedlings are in progress. Prospects of standing crops are good. Fodder and water are sufficient. Cattle-disease is reported from Indas thana.
	Vishnupur .	2·88	9	8½	
9	Midnapore ..	1·02	10	10	Transplantation of winter paddy continues. Condition of jute plant and sugarcane is fair. Fodder and water are sufficient.
	Contai ..	3·53	8	8	
	Tamluk ..	2·18	9	9	
	Ghatal ..	2·14	11½	11½	
	Jhargram ..	2·48	10	10	
10	Hooghly ..	5.00	9½	9½	Weather seasonable. Fodder and water are sufficient. The number of test work labourers for the week ending Saturday, the 11th July, was 2,378.
	Serampore ..	3·95	9½	9½	
	Arambagh ..	1·13	9½	9½	
11	Howrah ..	4·61	10	10	Weather seasonable. Its effects on crops are good with prospect of a fair outturn. Fodder and water are sufficient.
	Uluberia ..	5·60	9½	9½	
12	Rajshahi (Rampur-Boalia).	2·78	9½	9½	Weather seasonable. Condition of standing crops appears to be favourable. Fodder and water are sufficient.
	Naogaon ..	4·17	10½	10½	
	Nator ..	2·19	9½	9½	
13	Dinajpur ..	2·98	11	11	Weather seasonable. Fodder and water are sufficient. Cattle-disease is reported from Birganj, Atwari, Thakurgaon and Patnitola thanas.
	Thakurgaon ..	5·95	12	(n)	
	Balurghat ..	10·67	11½	(n)	
14	Jalpaiguri ..	8·45	11	11	Weather seasonable. Fodder and water are sufficient.
	Alipur ..	9·37	11	11½	

(n) Not reported.

Serial No.	District and sub-division.	Rainfall.	Price of common rice, in seers, per rupee.		Character of the weather, condition of crops, etc.
			This week.	Previous week.	
1	2	3	4	5	6
		Inches			
15	Darjeeling ..	(*n*)	8	8	Weather favourable. Transplantation of paddy and *marua* is in progress. Fodder and water are sufficient.
	Kurseong ..	13·64	8	8	
	Siliguri ..	13·93	10	10	
	Kalimpong ..	5·51	6½	7	
16	Rangpur ..	4·35	11	(*n*)	Weather seasonable. Prospects of standing crops are fair. More rain is urgently wanted. Recent rainfall in the Sadar subdivision was quite insufficient for transplantation of *aman* paddy. Fodder and water are sufficient.
	Nilphamari ..	7·07	11	(*n*)	
	Kurigram ..	7·02	11	(*n*)	
	Gaibandha ..	(*n*)	(*n*)	(*n*)	
17	Bogra ..	3·52	10½	10½	Sky cloudy with occasional rainfall. Agricultural operation not affected by weather condition. Growth and condition of crops are fair. Fodder and water are sufficient.
18	Pabna ..	4·01	10	10½	Weather cloudy. Condition of standing crops is satisfactory. Flood water is rising slowly. Harvesting of *aus* paddy is in progress. Fodder and water are sufficient.
	Serajganj ..	6·96	11½	11½	
19	Malda ..	6·21	10½	10½	Weather hot and cloudy. Prospects of standing crops are fair. Fodder and water are available. Rivers are rising rapidly.
20	Cooch Behar ..	10·94	13 4/16	13 4/16	Weather seasonable. Preparation of lands for winter paddy and rearing of seedlings in nursery and transplantation of the same continue. Prospects of standing crops are fair. Harvesting of *autumn* crops continues. Fodder and water are sufficient. Cattle-disease is reported from Sadar, Tufanganj and Dinhata subdivisions.
21	Dacca ..	3·43	10½	10½	Rainfall at North Sadar (Kapasia) 4·38. Weather seasonable. Prospects of crops appear to be fair. No large export and import. Fodder and water are sufficient. Anthrax still exists in Sadar and Narayanganj subdivisions. Harvesting of *aus* paddy and jute continues in the Manikganj subdivision.
	Manikganj ..	2·84	10⅞	10⅞	
	Narayanganj ..	3·56	12	12	
	Munshiganj ..	1·76	10½	10½	

(*n*) Not reported.

Serial No.	District and sub-division.	Rainfall.	Price of common rice, in seers, per rupee.		Character of the weather, condition of crops, etc.
			This week.	Previous week.	
1	2	3	4	5	6
		Inches.			
22	Mymensingh ..	4·37	10	10	Weather cloudy. Condition of crops is fair. Fodder and water are available.
	Jamalpur ..	5·85	10½	10½	
	Tangail ..	5·47	11	11	
	Netrakona ..	6·05	12½	12½	
	Kishorganj ..	7·04	10½	10 11/16	
23	Faridpur ..	3·69	11½	(n)	Weather seasonable. Condition of standing crops is fair. Cattle-disease in Ratail union board in Gopalganj subdivision has almost subsided. Fodder and water are sufficient.
	Goalundo (Rajbari)	2·48	10½	(n)	
	Madaripur ..	2·71	11½	(n)	
	Gopalganj (a) ..	2·36	12	(n)	
24	Bakarganj (Barisal)	2·05	10½	10	Weather seasonable. Prospects of standing crops are not bad in Sadar, fair in Pirojpur and Patuakhali and good in Bhola. Fodder and water are sufficient.
	Pirojpur ..	7·73	9½	9½	
	Patuakhali ..	6·59	10	10	
	Dakshin Shabazpur (Bhola).	4·07	(n)	10	
25	Chittagong ..	6·13	10 11*	10 11*	Weather seasonable. Transplantation of *aman* and harvesting of *aus* crops continue. Damage to *aus* paddy by insects reported from Banskhali. Fodder and water are sufficient. Cattle-disease is reported from places. Panga salt sells at 14 seers at Sadar and 12 seers at Cox's Bazar.
	Cox's Bazar ..	15·38	11	11	
26	Tippera (Comilla) ..	5·55	10½	10½	Weather condition and prospect of crops are fair.
	Brahmanbaria ..	3·94	10½	10½	
	Chandpur ..	2·54	11½	11	
27	Noakhali ..	7·61	10½	9	Fodder and water are sufficient. Cattle-disease reported from Feni has subsided.
	Feni ..	6·65	10½	10½	
28	Chittagong Hill Tracts.	5·89	11	11	Weather seasonable. Its effects are favourable. Fodder and water are sufficient. Cattle-disease still prevails.
29	Tripura State ..	6·96	10	10	Weather seasonable. Condition of cattle is good. Fodder and water are sufficient. Cotton sells at Rs. 8 to Rs 10 and jute at Rs. 2-8 to Rs. 5-8.

(a) The rainfall at Haridaspur, which is very near to Gopalganj, is shown here.

* Burma rice. (n) Not reported.

S. ABDULLAH, for *Director of Agriculture, Bengal.*

Dacca, the 20th July 1936.

Vital statistics of towns with a population of 50,000 and over of the Bengal Presidency for the week ending Saturday, the 11th July 1936.

Districts.	Nos.	Towns.	Population under registration according to census of 1931.			Births registered		Deaths registered.																						
			Male.	Female.	Total.	Number registered (excluding still-births).	Still-births registered.	Cholera.	Small-pox.	Plague	Cerebro-spinal meningitis.	Malaria.	Enteric fever.	Measles.	Relapsing fever (Epidemical).	Kala-azar.	Influenza.	Other fevers.	Dysentery.	Diarrhœa.	Pneumonia.	Tuberculosis (Pulmonary).	Other respiratory diseases.	Injuries including suicide.	Deaths from child-birth.	Other causes.	Total of all causes.			Total of corresponding week of the previous year.		
																										Male.	Female.	Total	Male.	Female.	Total.
Calcutta ..	1	Calcutta ..	778,817	362,045	1,140,862	482	60	11	7	1	5	13	28	6	..	4	13	28	37	14	90	52	39	11	1	265	349	282	631	338	279	617
Burdwan ..	2	Asansol Mining Settlement.	109,544	173,136	282,680	25	4	5	1	..	..	..	..	..	..	..	..	38	5	..	5	1	11	2	1	39	54	60	114	85	70	155
Howrah ..	3	Howrah ..	145,120	79,753	224,873	93	8	2	3	..	..	1	7	..	..	..	..	2	10	10	11	7	30	4	..	41	72	56	128	75	51	126
Dacca ..	4	Dacca ..	79,365	59,153	138,518	68	3	..	..	..	..	..	3	..	..	2	..	..	6	1	8	..	4	2	1	22	31	18	49	26	24	50
24-Parganas	5	Bhatpara ..	60,134	24,841	84,975	27	1	3	2	..	..	2	1	1	..	..	..	3	2	3	2	1	1	..	..	10	23	19	42	10	14	24
	6	Garden Reach	36,131	19,741	55,872	15	..	..	..	..	..	2	..	..	..	..	..	4	1	..	2	..	2	..	..	2	4	9	13	..	..	..
Chittagong ..	7	Chittagong ..	35,049	18,107	53,156	26	1	..	1	..	..	..	2	..	..	1	..	7	..	..	..	1	..	2	..	5	15	4	19	8	12	20

A. C. CHATTERJI, M.B., D.P.H., MAJOR, I.M.S., *Director of Public Health, Bengal.*

Calcutta, the 18th July 1936.

IRRIGATION DEPARTMENT, BENGAL.

Irrigation operations for the official year 1936-37.

Area leased for irrigation up to end of May 1936.

Circle.	District.	Canal.	Estimated full discharge.	Average discharge in month.	Discharge utilised.	Approximate area of land irrigated during the year up to the end of the month.	Approximate area of land under irrigation up to the same date last year.	Details of areas leased.							Rainfall, 1936-37.		Rainfall, 1935-36.	
								Long term leases.	Season leases.					Grand Total.	During month.	Up to end of month.	During month.	Up to end of month.
									Kharif.	Rabi.	Sugarcane.	Single watering.	Total.					
			Cusecs	Cusecs	Cusecs	Acres.	Acres.	Acres.	Acres.	Acres.	Acres.	Acres.	Acres.	Acres.	Inches.	Inches.	Inches.	Inches.
South-Western.	Midnapore ..	Midnapore	1,411	66	..	..	..	3,273	27,061	..	..	..	27,061	30,334	7·94	8·85	0 13	1·05
		Panskura	522	2	..	..	..	1,371	3,855	..	..	..	3,855	5,226	11·58	12·88	0·95	4·30
	Howrah ..	Tidal Reaches, Ranges I and II	..	..	..	..	..	..	..	..	..	..	..	..	17·34	17·79	2 44	5·33
		Total Midnapore Canal ..	..	..	..	..	..	4,644	30 916	..	..	..	30,916	35,560	..	..	..	..
		Total of the corresponding period last year ..	..	..	..	..	..	5,343	477	..	..	..	477	5,820	..	..	..	..
	Burdwan and Hooghly.	Damodar Canal proper ..	1,600	..	..	..	..	19,001	..	..	..	..	..	19,001	8·45	12·77	2·44	4·01
		Eden Canal proper ..	400	19	19	35	2	6,152	35(a)	..	..	..	35	6,187	9·98	10·98	1·95	4·35
		Total Damodar Canal ..	..	..	..	..	..	25,153	35	..	.	..	35	25,188	..	..	..	..
		Total of the corresponding period last year ..	..	..	..	..	..	31,067	65,683	..	545	..	66,228	97,295	..	..	..	..
	Birbhum ..	Bakreswar Canal ..	129	..	..	..	..	..	..	..	..	..	..	..	3·85	4·08	0·70	0·72
		Total of the corresponding period last year ..	129	..	..	..	..	..	..	..	..	..a	..	..	..	..	..	..
		GRAND TOTAL ..	..	..	..	..	..	29,797	30,951	..	..	..	30,951	60,748	..	..	..	..
		GRAND TOTAL OF THE CORRESPONDING PERIOD LAST YEAR ..	..	..	..	..	..	36,410	66,160	..	545	..	66,705	103,115	..	..	..	..

Saibuni Canal — Approximate area of land irrigated during the year up to the end of the month: Nil

(a) Represents hot weather.

J. F. RUSSELL,

Personal Assistant to the Chief Engineer to the Government of Bengal.

Calcutta, the 14th July 1936.

IRRIGATION DEPARTMENT, BENGAL.

Abstract statement showing the approximate volume of traffic and the tollage on canals in Bengal classed as Major Works and Minor Works and Navigation for the month of May 1936 as compared with the corresponding month of the previous year :—

Canals.	1936-37.					
	Weight of cargo.		Rafts.		Tollage.	
	During the month.	To end of the month.	During the month.	To end of the month.	During the month.	To end of the month.
	Tons.	Tons.	No.	No.	Rs.	Rs.
Major Works.						
Midnapore Canal	1,019	2,235	300	375	1,286	2,434
Hijili Tidal Canal	5,749	10,497	..	325	8,888	17,501
Total ..	6,768	12,732	300	700	10,174	19,935
Minor Works and Navigation.						
Calcutta and Eastern Canals ..	25,637	52,560	12,137	51,561	17,296	33,523
Tolly's Nala	24,762	49,514	41,999	91,762	7,440	15,012
Madaripur Bil Route	5,495	11,537	1,366	5,997	4,186	8,821
Total ..	55,894	113,611	55,502	149,320	28,922	57,356
Magrahat Channels	2,230	4,473	256	1,581	1,154	2,239
Orissa Coast Canal	4,226	7,935	775	4,275	3,776	7,184
GRAND TOTAL ..	62,350	126,019	56,533	155,176	33,852	66,779

Canals.	1935-36.					
	Weight of cargo.		Rafts.		Tollage.	
	During the month.	To end of the month.	During the month.	To end of the month.	During the month.	To end of the month.
	Tons.	Tons.	No.	No.	Rs.	Rs.
Major Works.						
Midnapore Canal	1,380	1,989	300	300	1,668	2,439
Hijili Tidal Canal	5,400	5,629	....	150	9,176	9,569
Total ..	6,780	7,618	300	450	10,844	12,008
Minor Works and Navigation.						
Calcutta and Eastern Canals ..	22,116	53,981	15,121	33,921	16,641	37,710
Tolly's Nala	22,584	49,424	44,550	87,016	7,027	15,277
Madaripur Bil Route	6,802	13,587	5,850	8,050	5,066	10,689
Total ..	51,502	116,992	65,521	128,987	28,734	63,676
Magrahat Channels	2,380	5,665	2,725	6,525	1,026	2,046
Orissa Coast Canal	3,290	5,768	450	625	2,819	4,762
GRAND TOTAL ..	57,172	128,425	68,696	136,137	32,579	70,484

Canal.	May 1936.			
	Tollage, 1936-37.		Tollage, 1935-36.	
	During the month.	To end of the month.	During the month.	To end of the month.
	Rs.	Rs.	Rs.	Rs.
Sundarbans Steamer Route ..	5,110	9,482	4,254	7,630

J. F. RUSSELL,

Personal Assistant to the Chief Engineer to the Government of Bengal.

Calcutta, the 6th July 1936.

FORM C—BENGAL.

STATEMENT OF COTTON PRESSED IN THE BENGAL PRESIDENCY FOR THE WEEK ENDING THE 10th JULY 1936.

[Section 5(2) of the Cotton Ginning and Pressing Factories Act, 1925.]

Name of Division or block.	Number of bales pressed.				District included in the block.
	During the week.	During the corresponding week last year.	Since 1st September 1935 (the date prescribed by the Local Government as the commencement of the season).	During the corresponding period last year.	
The Bengal Presidency	1,669 or 1,660·26 bales of 400 lbs each.	1,746	60,643	40,073	All districts in the Presidency.

J. B. McBRIDE,
Chief Inspector of Factories, Bengal.

CORPORATION OF CALCUTTA.

Central Municipal Office, the 14th July 1936.

By-election to elect a Councillor of the Corporation of Calcutta for the Special Constituency comprising the Bengal Chamber of Commerce.

NOTICE.

In compliance with provisions of sub section (2) of section 28 of Act III (B.C.) of 1923 and rule 15 (2) of the rules made by the local Government under section 30 of the said Act, it is hereby notified that Mr J. H. Methold has been declared duly elected as a Councillor of the Corporation of Calcutta for the Special Constituency comprising the Bengal Chamber of Commerce

J. C. MUKERJEA,
Chief Executive Officer.

Resolution on the Report on the Administration of the Jail Department of the Presidency of Bengal for the year 1935.

GOVERNMENT OF BENGAL.

Political Department.

Jails.

CALCUTTA, THE 16TH JULY 1936.

RESOLUTION No. 2114P.J.

Read the Report on the Administration of the Jail Department of the Presidency of Bengal for the year 1935.

1. The year covered by the report confirmed the view expressed last year that there was no hope of a reduction of the jail population to the level of the average of the years preceding 1930. The average daily strength rose from 21,850 in 1934 to 22,721, the highest on record. This figure exceeds the number of prisoners for whom accommodation is provided by about 33 per cent., but the actual congestion was much greater owing to the presence of a large number of detenus who have to be segregated from other prisoners and require more space per individual. The situation would have been still worse if Government had not resorted to the expedient, which they recognise as extremely unsatisfactory, of a jail delivery in which 2,130 non-habitual prisoners were released before the expiry of their sentences.

In addition to special jails at Berhampore and Hijli, the two temporary jails at Dum Dum remained in commission. These, however, are not adapted for the proper treatment of criminals and Government decided to increase the permanent available accommodation by the construction of a Central Jail at Dum Dum on a site which is being acquired from the Government of India. Some new construction work will be necessary, but a considerable amount of accommodation will be made available by the conversion of buildings formerly used as military barracks.

2. The jails continued to hold a large number of terrorist prisoners, 836 of these being received during the year as against 761 in 1934. Ninety-one terrorist convicts were deported to the Andamans and 3 were repatriated from the islands for medical reasons. The presence of this class of prisoner increased the difficulties of administration. There were 4 cases of assault by terrorists on officers when they refused to comply with inadmissible demands or condone breaches of discipline. One method of dealing with refractory prisoners of this type is to segregate them in cells, but the existing cellular accommodation in the jails is altogether inadequate. It is a matter of some satisfaction, however, that 32 new cells were built in the Midnapore Central Jail and 41 in the Dacca Central Jail during the year.

3. In spite of the overcrowding and the presence of terrorist prisoners, it is satisfactory to find that no serious jail outbreak occurred and only 1 convict and 1 under-trial prisoner escaped from inside the jails.

4. Though it was not possible, owing to the financial stringency, to undertake any considerable reforms, Government sanctioned a scheme for the establishment of libraries in all the District and Central Jails. Some expenditure was incurred on the purchase of books for Central Jails during 1935; and it is proposed, as an experimental measure, to spend Rs. 1,000 a year during the next four years on the provision of reading matter for educated prisoners. Another small improvement made in the year under review was the introduction of indoor games for well-behaved prisoners. It is hoped that such measures will encourage good conduct on the part of prisoners and help in their reformation.

5. The average period of detention of prisoners in the under-trial stage remained about the same as in 1934. The Governor in Council regrets to observe, however, that there was some deterioration in several districts and that the period of detention was still high in others, notably, Burdwan, 24-Parganas, Murshidabad, Rajshahi and Darjeeling. He trusts that local officers will examine the reasons for such long detentions and endeavour to effect an improvement in future.

The number of short-term prisoners was still very high, no fewer than 14,083, or 34 per cent. of those admitted having received sentences of less than one month, as compared with 13,629 in

1934. These included a small number of persons who were sent to jail for less than a week by union benches. A large proportion consisted of persons imprisoned in default of payments of fines in petty cases, especially cases under the Railways Act. The Governor in Council appreciates the difficulty which confronts courts which have to deal with such cases. If the punishment of imprisonment in default of payment of fine were not carried out, it is certain that there would be a great increase in the number of defaulters. His Excellency in Council desires, however, to remind all Magistrates of the uselessness and positively harmful consequences of short sentences; he requests District Officers to pay particular attention to this matter in their inspection of subordinate courts and union benches.

6. The problem of adolescent delinquency has caused much anxiety to Government of late years. Although there was only a slight increase in the percentage of prisoners under 21, their number is very high, being well over 5,000. The existing facilities for their treatment in special institutions are strictly limited; there is one Borstal School at Bankura with accommodation designed for 219 youths but with an average daily strength during 1935 of 312; there is also a jail for juveniles at Berhampore and special arrangements for the treatment of adolescent criminals on Borstal lines have been made in a part of the Alipore Central Jail. The Governor in Council agrees with the Inspector-General of Prisons that the present arrangements are seriously inadequate, and that the question of providing more institutions of the Borstal type is a pressing one which ought not to be ignored.

7. The number of boys sent by courts to the Borstal School at Bankura is steadily increasing, and the average daily strength in 1935 was, as stated above, 312 against 215 in 1934. Primary education is compulsory, and higher education is given to boys who show an aptitude for it. It is satisfactory to learn that, up to the end of 1935, 9 boys had passed the Matriculation Examination, 6 of whom had continued their studies in colleges and that 7 boys were prepared during 1935 for the Matriculation Examination in 1936. The performance is all the more creditable as most of the boys were illiterate on admission. Greater emphasis was properly laid on technical and industrial training, and the inmates were taught such trades as weaving, tailoring, carpentry, smithy, book-binding, laundry, compounding and dairying. It is gratifying that the school received sufficient orders from outside to keep the boys engaged in all sections of industries throughout the year. The Governor in Council has read with great interest of other activities of the school calculated to secure an all-round development of the boys, such as physical training, provision of a recreation club and a library, introduction of the boy scout movement and provision for religious and moral instruction; he congratulates the staff on the manner in which the institution was run.

Without an efficient organisation for the care of the youths on their release, Borstal treatment cannot fully succeed. It is regrettable that public opinion in the province has not been fully roused in this matter. Good work has been done by the Central After-Care Association in Calcutta, but district branches seemed to have languished, and in some districts there was no such association at all.

The prisoners in the Berhampore Juvenile Jail were given primary education by two paid teachers and also vocational training in such handicrafts as weaving, tailoring, carpentry, bamboo and cane work. They were also taught drill and folk dances. The boys in the Alipore Central Jail were given industrial training and a measure of literary education supplemented by moral and religious instruction. There is also a small library which was largely used by these prisoners. In the Presidency Jail only rudimentary education could be imparted to the boys.

8. A reference has already been made to the importance of private work on behalf of youths discharged from the Borstal Institution. There is also some need in the mufassal for voluntary societies which will interest themselves in the well-being of adult prisoners in the interval between their discharge from jail and their return to regular employment.

9. The number of punishments imposed on warders slightly increased from 1,843 in 1934 to 1,900 in 1935

including 69 dismissals against 58 in 1934. This is attributable to the large number of temporary men employed in the prison establishment, who have little incentive to do their best. It is satisfactory to learn that middle class Bengali youths of fair education are offering themselves in increasing numbers for employment as warders and that the recruitment of Bengali warders has increased.

10. The net earnings from jail manufactures fell from Rs. 3, 40,535 in 1934 to Rs. 3,20,934 in 1935. Only 32·8 per cent. of the prisoners were employed in manufactures. In the present state of congestion in the jails and general depression of the market the problem of keeping all prisoners suitably employed is a difficult one.

11. In spite of serious overcrowding the mortality was distinctly lower than in recent years but there was a slight increase in the incidence of sickness.

12. The Governor in Council has read with interest and pleasure the Inspector-General's appreciation of the work done by the jail staff at Burdwan in rescuing prisoners and salving Government property when the jail was flooded owing to the rise of the Damodar river in August. It has also given His Excellency in Council great pleasure to read the names of those officers whom the Inspector-General has commended for good work during the year, when conditions were very different from those which have hitherto been regarded as normal. His Excellency in Council is glad to have this opportunity of recording his appreciation of the services rendered by Lieutenant-Colonel R. E. Flowerdew as head of the department.

Order. Ordered that a copy of this resolution be forwarded to the Inspector-General of Prisons, Bengal, for information and guidance.

Ordered that a copy of the report be submitted to the Government of India in the Home Department.

Ordered that a copy of this resolution be forwarded to the Judicial Department of this Government, for information.

Ordered also that the resolution be published in the *Calcutta Gazette.*

By order of the Governor in Council,

J. R. BLAIR,

Addl. Secy. to the Govt. of Bengal.

Resolution on the report on the working of the Bengal Children Act, 1922, the Bengal Suppression of Immoral Traffic Act, 1933, the Reformatory Schools Act of 1897 and the Bengal Borstal Schools Act, 1928.

GOVERNMENT OF BENGAL.

Education Department.

Miscellaneous.

CALCUTTA, THE 20th JULY 1936

RESOLUTION No. 1808Mis.

Read

A report on the working of the Bengal Children Act, 1922, the Bengal Suppression of Immoral Traffic Act, 1933, the Reformatory Schools Act of 1897 and the Bengal Borstal Schools Act, 1928.

The Governor in Council desires again to place on record his great appreciation of the public service rendered by the various non-official bodies and voluntary associations mentioned in the report in connection with the working of these Acts. With the limited resources at their disposal they are, however, unable to deal adequately with the vast problems which the Acts were designed to solve and it is hoped that the public will recognise the valuable work which these associations have undertaken and the need for the maintenance and expansion of their activities, and will continue to increase their support and sympathy.

Order. Ordered that copies of the resolution be forwarded to the Director of Public Instruction, Bengal, the Commissioner of Police, Calcutta, the Inspector-General of Police, Bengal, and the Inspector-General of Prisons, Bengal, for information.

Ordered also that the resolution, together with the report, be published in the *Calcutta Gazette*.

By order of the Governor in Council,

H. GRAHAM,

Secy. to the Govt of Bengal.

Report on the Administration of the Bengal Children Act, 1922, the Bengal Suppression of Immoral Traffic Act, 1933, the Bengal Borstal Schools Act, 1928, and the Reformatory Schools Act, 1897, for the year 1935.

The Bengal Children Act extends only to the town of Calcutta, the suburbs and the port of Calcutta, the municipality of Howrah, the police-stations of Bally, Jagacha, Sankrail and Domjur in the district of Howrah and the police-stations of Baranagar, Barrackpore, Tittagarh, Noapara, Khardah, Naihati and Jagatdal in the district of the 24-Parganas. The following sections of the Act have not yet been brought into force in any part of Bengal:

Section 27(*1*), (*i*), (*ii*), (*iii*), (*a*), (*b*), (*c*), (*d*), (*e*) and (*f*).

Section 27(*2*), (*a*), (*b*), (*c*), (*d*) and (*f*).

Section 28(*2*).

The Bengal Suppression of Immoral Traffic Act, 1933, is in force in the town, suburbs and port of Calcutta, and at Panihati in the district of the 24-Parganas.

The Reformatory Schools Act applies to that part of the province in which the Bengal Children Act is not in force.

Boy offenders dealt with by courts in the Children Act area are sent to the Reformatory and Industrial Schools at Alipore and those from outside this area to the Reformatory School at Hazaribagh in the province of Bihar and Orissa under the provisions of the Reformatory Schools Act, 1897.

2. During the year under report, 2,373 children were dealt with by the Central Juvenile Court, Calcutta. The great majority of these were sent up for offences under section 66 of the Calcutta Police Act but 43 were prosecuted under the Bengal Children Act, 10 under the Bengal Suppression of Immoral Traffic Act and about 124 for theft and similar offences under the Indian Penal Code.

Eighty-nine of these children were sent to a school or other place of custody distributed as follows:

Reformatory School, Alipore	68
Industrial School, Alipore ..	7
Gobinda Kumar Home, Panihati ..	8
Salvation Army Home, Behala ..	3
Society for the Protection of Children in India . ..	3
Total ..	89

Others were fined or made over to their guardians while most of those sent up under the Police Act were warned and discharged.

3. The Reformatory and Industrial Schools, Alipore, which are for boys only, are maintained by Government, while the Salvation Army Women's Industrial Home at Behala provides a Reformatory School for girls. The following have been notified as places of suitable custody under section 28(*1*) of the Bengal Children Act and under section 27(2) (*b*) of the Bengal Suppression of Immoral Traffic Act :—

(*a*) The Gobinda Kumar Home, Panihati.

(*b*) The Salvation Army Women's Industrial Home, Behala

(*c*) The Calcutta Protestant Home, commonly called the Fendall Home.

(*d*) The Society for the Protection of Children in India, Calcutta.

4. *Controlling agencies.*—The Director of Public Instruction, Bengal, continued to be the Chief Inspector of Reformatory and Industrial Schools, with Mr A Macdonald and Mr. J. M Sen as Assistant Inspectors. The Inspectress of Schools, Presidency and Burdwan Divisions, was Assistant Inspector of Reformatory and Industrial Schools for girls.

The places of suitable custody recognised by Government as eligible for grants are inspected by three ladies appointed for the purpose.

5 *Administration.*—The following is a brief summary of the activities of the various institutions working under these Acts :—

(1) *Reformatory and Industrial Schools, Alipore.*—These schools which have been established by Government under section 6 (*1*) of the Bengal Children Act, are under the general administrative control of the Director of Public Instruction, Bengal, while their immediate management is vested in the Superintendent and a Managing Committee appointed under section 7(*1*) of the Act.

The combined institutions have accommodation for 350 boys and the entire cost is met from Provincial revenues.

On 31st December 1935, the number of boys in the Reformatory School was 177 against 143 and 138 in 1934 and 1933, respectively, and in the Industrial School the number was 61 against 68 in 1934 and 60 in 1933 The total number of boys in the two schools was thus 198 in 1933, 211 in 1934 and 238 in 1935.

The number of fresh admissions during 1935 was 87 in all—viz., 78 in the Reformatory and 9 in the Industrial School, of whom 71 had been convicted of theft.

One hundred and twenty-eight of the boys in the two schools were Hindus, 97 Moslems, 11 Christians and 2 Buddhists. The number of Bengali speaking boys increased from 60 to 88 and of Hindi-speaking boys from 65 to 67, while the number of Urdu-speaking boys decreased from 75 to 69 Of the 238 boys in the two schools only 87 belonged properly to Bengal, while the rest were natives of other provinces, but were either domiciled in Bengal or had come there temporarily mainly from Bihar and Orissa and the United Provinces.

Thirty-three boys were released from the Reformatory School and 13 boys from the Industrial School on the expiry of their terms. Three boys of the Industrial School were released on licence. Again 2 boys of the Reformatory and 1 of the Industrial School were released under orders of the Court

or of Government. Two boys were transferred to the Hazaribagh Reformatory School and 3 to the Borstal School, Bankura. Of the boys released during the year, 31 were made over to the Bengal After-care Association and the rest to their guardians.

Two boys of the Reformatory School escaped. The general discipline among the boys was, on the whole, good, there being only one instance in which a crime of violence was committed by an inmate, which arose out of rivalry between two boys. The accused was sentenced to transportation for life.

Primary education is imparted up to Class V and the boys also receive training in tinsmithy, blacksmithy, weaving, carpentary and tailoring. The results of the annual examinations were good. Facilities are given for moral and religious instruction and observance.

Visits to various places of interest were arranged as in previous years and 27 boys were allowed to go home for one day quite unattended two or three times during the last quarter of their detention and they all returned to schools in time.

The improved diet, introduced since 1932, has had a marked effect upon the general health of the boys. Excepting three cases of phthisis there was no serious case of illness in the hospital. The boys took part in regular games and physical exercises including gymnastics and drill. They acquitted themselves very creditably in various competitions.

The total expenditure on the schools in 1935 was Rs. 48,484, against Rs. 47,032 in the previous year and the average cost of maintaining and educating each pupil was Rs. 214-8 per annum, against Rs. 218-1 in 1934.

(2) *Gobinda Kumar Home.* This Home is intended for the reception of Indian girls dealt with under the Bengal Suppression of Immoral Traffic Act and the Bengal Children Act.

In 1935 there were 86 girls varying from 3 to 16 years of age, as against 82 in 1934. Eighty two of them were Bengalis and all Hindus. There were 14 fresh admissions during the year. All of them were dealt with under the Bengal Children Act or the Immoral Traffic Act.

There is a primary school attached to the Home. The girls were, as usual, given lessons in needle-work, knitting, weaving, nursing, cane work, jam and jelly making. Their handiwork was good.

The general health of the girls was good and their conduct satisfactory.

The cost of maintaining the Home was Rs. 13,331-10-11 of which Rs. 9,324-15-5 was met by Government grant. The average cost of maintaining a girl was about Rs. 12-14-8 a month, as against Rs. 13-8 per mensem in the previous year. Of this Rs. 10 was, as usual, contributed by Government in the shape of capitation grant and the balance was met from private sources.

(3) *Salvation Army Women's Industrial Home for Girls Behala.* This Home also caters for Indian girls dealt with under the two Acts. Its present capacity is 100 girls and the total number which passed through the institution in the year 1935 was 720.

Six Hindu girls, varying from 5 to 16 years of age, who were all Bengalis, were sent to the Home by the Court. They were all rescued from houses of ill-fame. Two of them were dealt with under section 4 and two under section 14 of the Bengal Suppression of Immoral Traffic Act and the remaining two under section 30 of the Bengal Children Act.

Their educational progress in the Home was fair and the health of all the girls was on the whole good during the year. The girls were taught sewing in addition to the general house work.

The Home received from Government a maintenance grant of Rs. 1,200 in addition to Rs. 3,190-8-9 on account of capitation grant for the girls sent there by the Court. Public subscriptions amounted to about Rs. 6,407.

The total cost incurred in the maintenance of the Home during the year was Rs. 10,615 and the cost of maintaining each girl during the year was Rs. 14-11-10 per mensem.

(4) *The Calcutta Protestant Home (Fendall Home).*—This Home is a Rescue Home for European and Anglo-Indian women and girls. The girls, who came to the Home during 1935, were for the most part in need of protection from undesirable surroundings, so that the work was mainly preventive. There were also a fair number needing a home while looking for work. During the year under review 41 girls, as against 50 in the last year, left the Home; 3 were married, 16 found new situations, 10 returned to relatives and 12 were sent to boarding schools.

The girls in the Home do fancy work of all kinds and make sample tea and money bags for business firms. They are paid according to the quantity and quality of the work done and the balance goes to the Home.

No girls dealt with under the Bengal Children Act or the Bengal Suppression of Immoral Traffic Act were sent to the Home during the year under review.

The Home received the usual maintenance grant of Rs. 960 from Government and its income from collections and donations amounted to Rs. 6,995.

(5) *Society for the Protection of Children in India.*—The number of children who were in the Society's custody or care or who were in one sense or another under its protection and at school as its wards was 298. The number of new cases registered during the year was 318 involving 522 children.

The Society received the usual maintenance grant of Rs. 1,600 from Government. Its total expenditure during the year amounted to Rs. 29,234.

(6) *Hazaribagh Reformatory School.*—The Reformatory School at Hazaribagh under the control of the Government of Bihar and Orissa continued to receive youthful offenders of this province sent by Courts of the districts to which the provisions of the Bengal Children Act have not been extended.

During the year under review 1 boy who had been convicted in Bengal, was discharged from the school under section 13 (2) of the Reformatory Schools Act of 1897.

(7) *Bengal After-care Association for Juveniles and Adolescents.*—One hundred and forty-seven boys were admitted to the hostel of the Association in 1935, against 145 in the previous year. Forty-six were received from the Borstal School, Bankura, 33 from the Alipore Reformatory and Industrial Schools, 65 from the Alipore Central Jail and 3 from other jails.

A notable feature of the year under report was the inauguration of the Industrial Section of the hostel The students received regular training in carpentry, tinsmithy, book-binding and cane-works.

The physical welfare of the inmates was secured by regular exercise and the playing of games. Discipline in the hostel was satisfactory and the inmates enjoyed normal health, save for a few cases of fever.

The Association received the usual maintenance grant of Rs. 2,400 from Government in the year. It also received contributions from the Corporation of Calcutta and from private sources.

The receipts of the Association during the year were Rs. 5,886, against an expenditure of Rs. 4,852.

The mufusil work of the Association is undertaken by several District Associations. Where no such association exists, it is done with the help of the District Magistrates and union boards

(8) *The All-Bengal Women's Union.*—The All-Bengal Women's Union, which was founded in the year 1932, has for its aims the abolition of commercial vice and of the exploitation and contamination of women and young persons. It is recognised by the Local Government for the purposes of clause (*c*), sub-section (7) of section 4 of the Bengal Suppression of Immoral Traffic Act.

The Union founded in November 1932 an After-care Home called the "All-Bengal Women's Industrial Institution" at Dum-Dum Cantonment in a Government of India building made over to it at a concession rent. Girls from 14 years upwards sent from different Rescue Homes in the province are admitted into the Home, which has at present 10 girls in residence. The Union is responsible for all the expenses of the Home.

The inmates of the Home are taught weaving and embroidery, and to make *chutneys* and *baries*. They are also given an elementary education in Bengali and English and a course of training in First Aid and in Girl Guide work. The health of the inmates was on the whole good.

The Union has helped in social work in Calcutta.

6. *Probation work.* During 1935, 249 children as against 259 in 1934 were on probation under the charge of the 3 probation officers—one lady and two men. These children were dealt with under the Bengal Children Act and the Immoral Traffic Act.

Boys were visited almost every week by the male probation officers and girls generally once a month by the lady probation officer. The conduct and progress of the probationers were carefully watched by these officers who put themselves always in personal touch with the boys, and, by means of friendly advice and moral persuasion, tried to create a suitable atmosphere so as to bring about a new and healthy outlook of life among the youthful delinquents Some of the probationers have been making remarkably satisfactory progress and it can well be expected that some of them will turn out useful citizens.

The probation officers had also to make initial enquiries into the antecedents, relations, conduct, etc., of all the serious cases tried in the Court

The Magistrate of the Central Children Court visited the probationers from time to time in order to gain personal knowledge about them

Printed and published by the Superintendent, Government Printing, Bengal Government Press, Alipore, Bengal, on the 23rd July 1936.

Registered No. C207

No. 31 of 19

The Calcutta Gazette

Published by Authority

THURSDAY, JULY 30, 1936.

CONTENTS:

	Page.
Part I.—Orders and Notifications by the Governor of Bengal, the Government of Bengal, the High Court, Government Treasury, etc.	1787—1872
Part IA.—Orders and Notifications by the Government of India republished for general information	197—198
Part IB.—Educational Notices ..	1215—1308
Part II.—Advertisements ..	697—712
Part III.—Acts of the Bengal Legislative Council	*Nil*
Part IV.—Bills introduced in the Bengal Legislative Council, Reports of Select Committees presented or to be presented to that Council, and Bills published before introduction in that Council ..	*Nil*
Part V.—Acts of the Indian Legislature assented to by the Governor-General and Ordinances promulgated under section 72 of the Government of India Act ..	*Nil*
Part VI.—Bills introduced in the Council of State and Legislative Assembly, Reports of Select Committees presented to the Council and Assembly and Bills published under rule 18 of the Indian Legislative Rules	*Nil*
Supplement No. 31 :—	
Forecast of the Summer *Til* (Sesamum) Crop of Bengal, 1936-37	1057—1059
Weekly Gauge Readings—Cotton Ginning and Pressing Weekly Weather and Crop Report—Prices current—Weekly Vital Statistics	1060—1070

PART I

Orders and Notifications by the Governor of Bengal, the Government of Bengal, the High Court, Government Treasury, etc.

Orders by His Excellency the Governor of Bengal.

No. 6635A.—27th July 1936.—Whereas in notification No. 5548A., dated the 4th July 1936, the Presidency and Burdwan (European) constituency of the Bengal Legislative Council was called upon, in accordance with sub-rule (*1*) of rule 26 of the Bengal Electoral Rules, to elect a member before the 20th September 1936 ;

And whereas no person has been duly nominated for election ;

Now, therefore, in pursuance of sub-rule (*3*) of rule 14 of the Bengal Electoral Rules, His Excellency the Governor is pleased to call upon the said constituency to elect a member in accordance with the said rules before the 30th September 1936.

H. J. Twynam,

Chief Secy. to the Govt. of Bengal (offg.).

Orders by the Government of Bengal.

No. 6659A.

Appointments and Transfers.

GENERAL.

Pabna-Nadia. No. 6431A.—23rd July 1936.—Babu Srimanta Das Gupta, Deputy Magistrate and Deputy Collector, Serajganj, Pabna, is appointed to have charge of the Ranaghat subdivision of the Nadia district.

Dacca Divn.—No. 6460A.—24th July 1936.—The Sub-Deputy Collectors, on leave, named below, are posted to the Dacca Division :—

Babu Hiralal Ray.

Babu Mahendra Nath Chaudhuri.

Chittagong Divn.—No. 6465A.—24th July 1936. —Babu Jamini Kanta Basu, Sub-Deputy Collector, on leave, is posted to the Chittagong Division.

POLICE.

Calcutta-Faridpur. — No. 6650A. — 25th July 1936.—Babu Sukdeb Sarkar, Inspector of Police, C. I. D., is appointed temporarily to act as Deputy Superintendent of Police and is posted to the headquarters station of the Faridpur district.

ECCLESIASTICAL.

Dinajpur.—No. 6201A.—20th July 1936.—In exercise of the powers conferred by section 9 of the Indian Christian Marriage Act, 1872 (XV of 1872), the Governor in Council is pleased to grant a license to Babu Jitendra Nath Karmakar, Preacher of the London Baptist Missionary Society, Dinajpur, authorising him to grant certificates of marriages between Native Christians.

2. He is also appointed a Registrar of Births and Deaths under Act VI of 1886 for the district of Dinajpur.

Leave.

GENERAL.

No. 6204A.—20th July 1936.—Babu Hira Lal Roy, Sub-Deputy Collector, is allowed leave on average pay for two weeks, under rule 81 (*b*) (*ii*) of the Fundamental Rules, in extension of the leave granted to him under the orders of the 19th June 1936.

Tippera.—No. 6226A.—20th July 1936.—Maulvi Mazharul Islam, Deputy Magistrate and Deputy Collector, Tippera, is allowed leave on average pay up to the 17th October 1936, under rule 81 (*b*) (*ii*) of the Fundamental Rules, with effect from the 22nd June 1936, or any subsequent date on which he may be relieved.

Dacca.—No. 6235A.—21st July 1936.—Maulvi Daliluddin Ahmed, Sub-Deputy Collector, Dacca, is allowed leave on average pay, under rule 81 (*b*) (*ii*) of the Fundamental Rules, from the 1st August 1936 to the 12th September 1936, inclusive.

No. 6455A.—24th July 1936.—Babu Anukul Chandra Sen, Sub-Deputy Collector, is allowed leave on average pay up to the 17th October 1936, under rule 81 (*b*) (*ii*) of the Fundamental Rules, with effect from the 1st August 1936, or any subsequent date on which he may relinquish charge of his duties in the Settlement Department.

No. 6625A. — 24th July 1936. — Mr. E. F. McInerny, I.C.S., is allowed leave not due on half average pay up to the 31st January 1937, under rule 81 (*c*) (*ii*) of the Fundamental Rules, in extension of the leave granted to him under the orders of the 18th July 1936.

24-Parganas.—No. 6631 A.—25th July 1936.—In modification of the orders of the 1st May 1936, Babu Nagendra Nath Sen, Deputy Magistrate and Deputy Collector, 24-Parganas, is allowed leave on average pay for four months, under rules 81(*b*)(*ii*) and 86(*a*) of the Fundamental Rules, with effect from the 30th May 1936.

No. 6647A.—25th July 1936.—Mr. S. S. R. Hattiangadi, I.C.S., was allowed leave on half average pay for eight days, under rule 81(*d*) of the Fundamental Rules, in extension of the leave granted to him under the orders of the 19th February 1936.

No. 6652A.—27th July 1936.—Mr. B. K. Basu, I.C.S., District and Sessions Judge, was allowed leave on average pay for one day, viz., the 2nd July 1936, under rule 81 (*b*) (*i*) of the Fundamental Rules, in extension of the leave granted to him under the orders of the 17th February 1936.

H. J. TWYNAM,

Chief Secy. to the Govt. of Bengal (offg.).

NOTIFICATIONS.

No. 6637A.—27th July 1936.—With reference to notification No. 6635A., dated the 27th July 1936, and in exercise of the powers conferred by clauses (*a*) and (*b*) of sub-rule (*2*) of rule 11 of the Bengal Electoral Rules, and in pursuance of sub-rule (*3*) of that rule, the Governor in Council is pleased to prescribe for the Presidency and Burdwan (European) constituency of the Bengal Legislative Council the 7th August 1936 as the date for the nomination of candidates and for the delivery of nomination papers to the Returning Officer, and the 10th August 1936 as the date on which the scrutiny of nominations shall be held.

No. 6657A.—27th July 1936.—In exercise of the powers conferred by regulation LIV of the Bengal Electoral Regulations, the Governor in Council is pleased to appoint the 14th August 1936 as the date on or before which the Returning Officer for the Bengal National Chamber of Commerce Constituency of the Bengal Legislative Council shall send the ballot papers to the electors in connection with the by-election in that constituency.

H. J. TWYNAM,

Chief Secy. to the Govt. of Bengal (offg.).

Reforms.

No. 5044A R.—25th July 1936.—The following communique relating to the publication of the draft electoral rolls for the constituencies of the Bengal Legislative Assembly and the Bengal Legislative Council under the new constitution and the method of submitting claims and objections thereto, is published for general information and guidance

R. N. GILCHRIST,

Reforms Commr. and Joint Secy. (ex-officio) to the Govt. of Bengal.

COMMUNIQUE.

Calcutta, the 25th July 1936.

The compilation of the electoral rolls for all the constituencies of the Bengal Legislative Assembly (except the Trade Union Labour and University constituencies) and of the Bengal Legislative Council has now been completed, and the rolls will be published in draft on the 3rd August 1936.

2. Owing to the magnitude of the task of preparing the rolls under the extended franchise, provisional rolls for the General, Muhammadan, Women's, Indian Christian, European and Anglo-Indian constituencies were prepared during 1935. These provisional rolls have now been brought up to date. Every effort has been made to make the rolls as complete and as accurate as possible, but persons who consider themselves qualified to vote are advised to inspect the rolls when they are published to see if their names are included. If their names are not included, or if they consider there is any inaccuracy in the entries, they may make claims to have their names included, or submit objections to entries which they consider are inaccurate or wrong.

3. A complete copy of the draft rolls for all constituencies will be published at the offices of the Registering Authority and the Returning Officer. In urban areas, the rolls for General, Muhammadan, Indian Christian and Women's constituencies will be published at the office of the municipality or cantonment concerned and also at convenient places within wards. In rural areas relevant portions of these rolls will be published at the offices of the Chaukidari union and union board, at police-stations, sub-registry offices, subdivisional offices, Munsif or District Judges' courts and at district offices.

4. Claims and objections must be submitted in prescribed forms and in the manner provided in the rules, and have to be addressed to the Revising Authority. They may be presented either to the Revising Authority or to the Registering Authority, or to the District or Subdivisional Magistrate of the district or subdivision to which the claimant or objector belongs, or they may be sent by post to the Revising Authority. In the case of Labour and Commerce and Industry constituencies, claims and objections have to be addressed and presented or sent by post to the Revising Authority. The names of revising officers and registering authorities are given in notices with which the rolls are published.

5. The last date for submitting claims and objections is the 19th August 1936. Under the Rules, applications received after this date will be rejected.

6. The forms on which claims and objections may be made will be obtainable free of charge from the offices of Commissioners of Divisions, District Officers, and Subdivisional Officers concerned (in Calcutta, the office of the Chief Executive Officer, Calcutta Corporation) and also from the Reforms Office, Writers' Buildings, Calcutta. Claims and objections not submitted in printed forms are liable to be rejected, but there is no objection to a claim or objection being filed on a typed form if a printed form is not available.

7. All necessary particulars regarding the qualifications of electors, the method of publication and revision of electoral rolls and the prescribed forms for claims and objections have been embodied in the Bengal Electoral Orders and Rules, copies of which can be purchased at four annas a copy from the Bengal Government Press (Publication Branch), 38, Gopalnagar Road, Alipore, or the Sales Office, Writers' Buildings, Calcutta.

POLICE DEPARTMENT.

NOTIFICATION.

No. 3152Pl.—22nd July 1936.—In exercise of the powers conferred by section 2 and sub-section (*l*) of section 8 of the Poisons Act, 1919 (XII of 1919), the Governor in Council is pleased to make the following amendments in the rules regulating the possession for sale and the sale of certain poisons in the Bengal Presidency published with notification No. 5303Pl., dated the 12th December 1931, at pages 1574-1578 of Part I of the *Calcutta Gazette*, dated the 17th idem, as subsequently amended :—

Amendments.

1. In Part I, rule 2 of the said rules, *for* the words "Schedules I and II" *substitute* the words "Schedules I, II and III."

2. In Part I, rule 3 of the said rules, *for* the words "Schedules I and II" *substitute* the words "Scheules I, II and III."

3. In Part I, rule 10 of the said rules, *for* the words "Schedules I and II" *substitute* the words "Schedules I, II and III."

4. In Part II, rule 19 of the said rules, *for* the words "enumerated in Schedule II," *substitute* the words "enumerated in Schedules II and III."

5. In Part II, rule 20 of the said rules, *after* the words "Schedule I" in line 2 *insert* the following :—

"and the whole of Schedule III."

6. Cancel item 6 from Schedule II appended to the said rules and re-number the subsequent items as items 6 to 14.

7. *Add* the following as Schedule III to the said rules:—

Schedule III.

(*a*) *Barbituric acid group.*—Barbitone or veronal, Sodium barbitone or medinal, Proponyl, Neonal or soneryl, Dial, Phenobarbitone or luminal, Sodium luminal, Phanadorm, Evipan, Sodium evipan, Pento-barbitone, Nembutal, Ipral, Allonal, Veramon, Gardenal, Cibalgin, Somnifaine, Sodium hebaral-Beatol, Quadronox, Amytal, Pernocton and other barbituric acid derivatives.

(*b*) *Sulphone group.*—Sulphonai, Trional, Tetronal and allied drugs.

(*c*) *Chloral group.*—Chloral, Chloral hydrate-Chloralamide, Butyl chloral, Chloralose, Chlorbutol, Hypnal, Dormiol, Ural, Isopral, Bromal, Paraldehyde, Amylene hydrate, Aponal, Hedonal, Neuronal, Avertin and other chloral derivatives.

H. J. TWYNAM,

Chief Secy. to the Govt. of Bengal (offg.).

Orders by the Inspector-General of Police, Bengal.

Calcutta.—No. 7979A.—22nd July 1936.—**Rangpur-Nadia.**—Risaldar Muhammad Khan, Armed Inspector, Rangpur, is transferred to Nadia, *vice* Khan Sahib Subadar Gulab Khan, Armed Inspector, retired. The transfer is sanctioned at the Inspector's own request.

Noakhali.—Babu Ram Singhasan Kuar, officiating Armed Inspector, Noakhali, is appointed probationary Inspector with effect from 14th July 1936 to fill the permanent vacancy caused by the retirement of Khan Sahib Subadar Gulab Khan, Inspector, and is posted to Noakhali.

J. C. FARMER,

Inspector-General of Police (offg.).

JUDICIAL DEPARTMENT.

Appointments and Transfers.

Nadia-Hooghly.—No. 5635 J.—22nd July 1936.—Babu Narayan Chandra Basu, munsif of Chuadanga, in the district of Nadia, is appointed to be a munsif in the district of Hooghly, to be ordinarily stationed at Serampore.

Nadia.—No. 5638 J.—22nd July 1936.—Babu Pratap Chandra Sen Gupta, munsif, on leave, is appointed to be a munsif in the district of Nadia, to be ordinarily stationed at Chuadanga.

Hooghly.—No. 5641J.—22nd July 1936.—Babu Charu Chandra Chakrabatti, probationary munsif, now employed as a munsif of Serampore, in the district of Hooghly, is appointed to be a munsif in the said district, to be ordinarily stationed at Serampore, during the absence, on leave, of Babu Sharat Chandra Ray Chaudhuri, or until further orders.

Howrah.—No. 5644 J.—22nd July 1936.—In exercise of the powers conferred by sections 14 and 15 and the proviso to section 357 of the Code of Criminal Procedure, 1898 (Act V of 1898), the Governor in Council is pleased—

(*a*) to confer upon Babu Haripada Roy Chaudhuri the powers of a Magistrate of the second class, in the district of Howrah, for a period of three years from the date of this notification, in respect to such cases as may be made over to him within the limits of the Sadar subdivision of the said district,

(*b*) to direct that he shall, in addition to sitting singly, sit as a member of the Sadar bench in the said district, and

(*c*) to direct him to take down evidence in the English language.

Nadia.—No. 5655J.—23rd July 1936.—Babu Kalipada Chattoraj, probationary munsif, is appointed to be additional munsif (on training) at Krishnagar, in the district of Nadia.

Dinajpur-Mymensingh.—No. 5658J —23rd July 1936.—Maulvi Md. Hossain Ali, probationary munsif, now employed as a munsif at Dinajpur (Sadar), is appointed to be a munsif in the district of Mymensingh, to be ordinarily stationed at the Sadar station, during the absence, on leave, of Maulvi Abdul Jabbar Khan, or until further orders.

Faridpur. No. 5674J. 23rd July 1936.—In exercise of the powers conferred by sections 14 and 15 and the proviso to section 357 of the Code of Criminal Procedure, 1898 (Act V of 1898), the Governor in Council is pleased

(*a*) to confer upon Babu Chandra Bilash Mukharji the powers of a Magistrate of the first class, in the district of Faridpur, for a period of three years from the 13th August 1936, in respect to such cases as may be made over to him within the limits of the Gopalganj subdivision of the said district,

(*b*) to direct that he shall, in addition to sitting singly, sit as a member of the Gopalganj bench in the said district, and

(*c*) to direct him to take down evidence in the English language

Rajshahi. No. 5676J 23rd July 1936. In exercise of the powers conferred by sections 14 and 15 and the proviso to section 357 of the Code of Criminal Procedure, 1898 (Act V of 1898), the Governor in Council is pleased -

(*a*) to confer upon Khan Sahib Maulvi Muhammad Afzal the powers of a Magistrate of the second class, in the district of Rajshahi, for a period of three years from the 20th September 1936 in respect to such cases as may be made over to him within the limits of Naogaon subdivision of the said district,

(*b*) to direct that he shall, in addition to sitting singly sit as a member of the Naogaon bench in the said district, and

(*c*) to direct him to take down evidence in the English language

Burdwan. No 5724J. 24th July 1936. In exercise of the powers conferred by sections 14 and 15 of the Code of Criminal Procedure, 1898 (Act V of 1898), the Governor in Council is pleased—

(*a*) to confer upon Babu Dinabandhu Tewari the powers of a Magistrate of the third class, in the district of Burdwan, for a period of three years from the date of this notification and

(*b*) to direct him to sit as a member of the Sadar bench in the said district

Leave.

Dinajpur. No 5744J 19th June 1936 - Babu Basanta Bihari Mukharji, munsif of Dinajpur (Sadar) is allowed privilege leave for the period from the 24th June to the 25th July 1936, *viz*., leave on full pay for twenty six days, under the amendment to Article 271, Civil Service Regulations, and leave on half pay for the remaining period, under Article 271, Civil Service Regulations.

Faridpur.—No 5745J—25th June 1936—Babu Raj Kumar Datta, munsif of Gopalganj, in the district of Faridpur, is allowed leave on average pay for two months, under rules 81 (*b*) (*ii*) and 82 (*b*) of the Fundamental Rules, with effect from the 3rd July 1936

Malda.- No 5746J --27th June 1936.—Maulvi Obaidus Subhan, munsif of Malda, is allowed leave on average pay, *ex*-India for the period from the 30th January 1936 to the 24th March 1936, under the proviso to rule 81 (*b*) (*ii*) of the Fundamental Rules and leave on average pay in India for the period from the 25th March 1936 to the 9th April 1936, under rules 81 (*b*) (*ii*) and 82 (*b*) of those Rules

Hooghly. No 5747J 2nd July 1936 -- Babu Sharat Chandra Ray Chaudhuri, munsif of Serampore, in the district of Hooghly, is allowed leave on average pay for two months, under rules 81 (*b*) (*ii*) and 82 (*b*) of the Fundamental Rules, with effect from the 12th June 1936.

Bakarganj. No 5748J 10th July 1936.- - Babu Pramatha Nath Lahiri, munsif of Barisal, in the district of Bakarganj, is allowed leave on average pay for twenty-seven days, under rules 81 (*b*) (*ii*) and 82 (*b*) of the Fundamental Rules, with effect from the 13th July 1936

Rangpur.--No 5749J 10th July 1936.—Babu Shib Chandra Datta munsif of Kurigaon, in the district of Rangpur, is allowed leave on average pay for the period from the 3rd July to the 1st August 1936 under rules 81 (*b*) (*ii*) and 82 (*b*) of the Fundamental Rules

Tippera. No 5750J 10th July 1936 Mr. Satish Chandra Bagchi munsif of Chandpur, in the district of Tippera is allowed leave on average pay for ten days under rules 81 (*b*) (*ii*) and 82 (*b*) of the Fundamental Rules, with effect from the 13th July 1936 The orders of the 22nd June 1936 granting him leave for ten days from the 2nd July 1936 are cancelled

Promotions and Confirmations.

No 5699J 24th July 1936 - In partial modification of the orders contained in this department notification No 684J, dated the 20th January 1936 the following promotions and confirmations are sanctioned in the Bengal Civil Service (Judicial)

Promoted to the Selection Grade of Subordinate Judges on Rs 1,000

Babu Pashupati Mukharji Subordinate Judge and Assistant Sessions Judge, on leave, with effect from the 13th September 1935, *vice* Mr Panna Lal Basu, confirmed as a District and Sessions Judge,

Babu Phanindra Nath Mitra, Subordinate Judge and Assistant Sessions Judge now acting as Additional District and Sessions Judge Howrah, with effect from the 16th September 1935, *vice* Mr Nara Nath Mukharji confirmed as a District and Sessions Judge

Babu Hem Chandra Sanyal, Subordinate Judge and Assistant Sessions Judge, now acting as Additional District and Sessions Judge, Dacca, with effect from the 7th December 1935, *vice* Mr Surendra Nath Sen, No 1 confirmed as a District and Sessions Judge

Promoted to the Selection Grade of Subordinate Judges on Rs. 1,000.

Babu Phanindra Nath Mitra, Subordinate Judge and Assistant Sessions Judge, acting as Additional District and Sessions Judge, Howrah, with effect from the 1st March 1935, *vice* Mr. Hira Lal Mukharji, confirmed as District and Sessions Judge.

Babu Hem Chandra Sanyal, Subordinate Judge and Assistant Sessions Judge, acting as Additional District and Sessions Judge, Dacca, with effect from the 16th April 1935, *vice* Mr. Nara Nath Mukharji, promoted.

Babu Gajanan Banarji, Subordinate Judge and Assistant Sessions Judge, acting as Additional District and Sessions Judge, Faridpur, with effect from the 19th July 1935, *vice* Babu Debendra Nath Sen Gupta, promoted.

Babu Amrita Lal Banarji, Subordinate Judge and Assistant Sessions Judge, Tippera, with effect from the 25th July 1935, *vice* Babu Manmohan Banarji, retired.

Rai Sahib Pranendra Narayan Chaudhuri, Subordinate Judge and Assistant Sessions Judge, acting as Additional District and Sessions Judge, Mymensingh, with effect from the 13th September 1935, *vice* Babu Pashupati Mukharji, promoted.

Babu Ramesh Chandra Sen, Subordinate Judge and Small Cause Court Judge, Dacca, with effect from the 16th September 1935, *vice* Babu Phanindra Nath Mitra, promoted.

Babu Santosh Sil Banarji, Subordinate Judge and Assistant Sessions Judge, acting as Additional District and Sessions Judge, Bakarganj, with effect from the 7th December 1935, *vice* Babu Hem Chandra Sanyal, promoted.

Confirmed in the grade of Subordinate Judges below the Selection Grade.

Babu Ram Lal Banarji, then officiating Subordinate Judge, with effect from the 1st March 1935, *vice* Babu Phanindra Nath Mitra, promoted.

Babu Srish Chandra Chakrabatti, then officiating Subordinate Judge, with effect from the 16th April 1935, *vice* Babu Hem Chandra Sanyal, promoted.

Babu Upendra Nath Chatarji, then officiating Suboridnate Judge, with effect from the 19th July 1935, *vice* Babu Gajanan Banarji, promoted.

Babu Gobinda Chandra Chakrabatti, then officiating Subordinate Judge, with effect from the 25th July 1935, *vice* Babu Amrita Lal Banarji, promoted.

Babu Nikunja Bihari Banarji, officiating Subordinate Judge and Assistant Sessions Judge, Bogra, with effect from the 25th July 1935, the date of introduction of the revised cadre.

Babu Surendra Nath Sen, No. II, officiating Additional Subordinate Judge and Assistant Sessions Judge, Tippera, with effect from the 13th September 1935, *vice* Rai Sahib Pranendra Narayan Chaudhuri, promoted.

Babu Surendra Chandra Basu, officiating Subordinate Judge, Faridpur, with effect from the 16th September 1935, *vice* Babu Ramesh Chandra Sen, promoted.

Babu Dwarka Nath De, officiating Subordinate Judge, Tippera, with effect from the 7th December 1935, *vice* Babu Santosh Sil Banarji, promoted.

Babu Banku Bihari Chatarji, officiating Additional Subordinate Judge, Nadia, with effect from the 16th June 1936, *vice* Babu Suresh Chandra Sen, No. I, retired.

Babu Dhirendra Nath Guha, officiating Subordinate Judge, Howrah, with effect from the 16th June 1936, *vice* Babu Jamini Kishor Ray, retired.

NOTIFICATIONS.

Chittagong.—No. 5629J.—22nd July 1936.—In exercise of the power conferred by section 65 of the Bengal Village Self-Government Act, 1919 (Bengal Act V of 1919), the Governor in Council is pleased to appoint Babu Kasi Nath Sikdar, a member of the Boilchari union board within the Banskhali police-station in the Sadar (B) subdivision of the Chittagong district, to be, during his term of office as such member, a member of the union bench within the jurisdiction of the said union board for the purposes of that section.

Mymensingh.—No. 5631J.—22nd July 1936.—In exercise of the power conferred by section 65 of the Bengal Village Self-Government Act, 1919 (Bengal Act V of 1919), the Governor in Council is pleased to appoint the following members of the Sarmasia union board within the Atpara police-station in the Netrakona subdivision of the Mymensingh district, to be, during their term of office as such members, members of the union bench within the jurisdiction of the said union board for the purposes of that section :—

Maulvi Aftabuddin Shah Fakir.

Maulvi Md. Ismail Master.

Maulvi Mokshed Ali Khan.

Maulvi Abdur Rahim Ahmad.

Babu Kailash Chandra Biswas.

Mymensingh.—No. 5632J.—22nd July 1936.—In exercise of the power conferred by section 73 of the Bengal Village Self-Government Act, 1919 (Bengal Act V of 1919), the Governor in Council is pleased to appoint the following members of the Sarmasia union board within the Atpara police-station in the Netrakona subdivision of the Mymensingh district, to be, during their term of office as such members, members of the union court within the jurisdiction of the said union board for the purposes of that section :—

Maulvi Aftabuddin Shah Fakir.

Maulvi Md. Ismail Master.

Maulvi Mokshed Ali Khan.

Maulvi Abdur Rahim Ahmad.

Babu Kailash Chandra Biswas.

T. ROXBURGH,

Secy. to the Govt. of Bengal (offg.).

LOCAL SELF-GOVERNMENT DEPARTMENT.

NOTIFICATIONS.

Minister-in-charge: The Hon'ble Sir Bijoy Prasad Singh Roy, Kt.

Midnapore.—No. 5914L.S.-G.—23rd July 1936.—In exercise of the power conferred by section 5 of the Bengal Village Self-Government Act, 1919 (Bengal Act V of 1919), and after consideration of the views of the Midnapore district board and Sadar local board the Government of Bengal (Ministry of Local Self-Government) are pleased to direct that each of the following local areas in thanas Midnapore, Keshpore, Salbani, Garbetta and Debra in the Sadar subdivision, north of the Midnapore district, shall be declared a union for the purposes of the Act.

2. In exercise of the power conferred by sub-section (*1*) of section 6 of the said Act, the Government of Bengal (Ministry of Local Self-Government) are pleased to establish union boards for each of the unions hereby declared and to fix nine as the number of members of each union board.

3. In exercise of the power conferred by sub-section (*3*) of section 6 of the said Act, the Government of Bengal (Ministry of Local Self-Government) are pleased to direct that one-third of the number of members of each union board shall be appointed by the District Magistrate on the grounds that such appointment is necessary for the due representation of minorities and of different interests within the union.

4. This cancels notifications No. 3548-L.S.-G. and No. 3550L.S.-G., dated the 2nd August 1924.

Midnapore district board.

Sadar local board.

Midnapore thana.

Names of mauzas constituting the union with their numbers in the jurisdiction list.

Chandra union.

Dhajidhara	...	37
Kundalbani	...	38
Deuldanga	...	39
Dhobasoldihi	...	42
Kharikabadi	...	43
Katchra	...	44
Palasbani	...	45
Birbiria	...	46
Chholadon	...	47
Nischintapur	...	48
Gangadharpur	...	49
Bankura	...	50
Gohaldanga	...	51
Alampur	...	52
Bansol	...	53
Gaya Simulia	...	54
Binpur	...	55
Chilgara	...	56
Putki	...	57
Harinakanali	...	58

Names of mauzas constituting the union with their numbers in the jurisdiction list.

Jamdahara	...	59
Dharrasol	...	62
Bhaluk Khulia	...	63
Dumurkata	...	64
Hatiasol	...	65
Tiakati	...	66
Nuniachatri	...	67
Dainmari	...	68
Kharikasuli	...	69
Kesasol	...	70
Mohanpur	...	71
Chandra	...	72
Bhalki	...	73
Depara	...	74
Benasuli	...	75
Keliamari	...	76
Jhumjhumi	...	77
Shankadanga	...	78
Baharabani	...	79
Moheshpur	...	80
Gajpatia	...	81
Naldumra	...	82
Upardanga	...	83
Bhatpara	...	84
Ellabani	...	85
Dhalkidanga	...	86
Jamni	...	87
Nadhasuli	...	88
Jadavpur	...	89
Shibpur	...	90
Raghi Tikarpara	...	93
Chhota Jamni	...	95
Bhunyahata	...	96
Belia	...	97
Arjunbandh	...	98
Baramchati	...	99

Keshpur thana.

Anandapur union.

Anandapur	...	378
Pachra	...	84
Singpur	...	85
Bibekpur	...	368
Sangrambar	...	371
Laurya	...	370
Bhagirathbar	...	369
Ganga Narayanbar	...	373
Gamaria	...	374
Jhatiara	...	375
Ranpara	...	376
Tengagerya	...	443
Lepsa	...	377
Natunbazar	...	400
Sonadihi	...	442

Names of mauzas constituting the union with their numbers in the jurisdiction list.		
Joara Paikan	...	402
Sukundihi	...	401
Kanchgerya	..	399
Renuar	...	398
Mathurabani	...	397
Ganta	...	380
Gopalnagar	...	379
Basantabar	...	372

Salbani thana.

Salbani union.

Bonamalipur	...	332
Kalyanpur	...	338
Khanigeria	...	339
Mirga	...	340
Jagannathpur	...	341
Hemsagar	...	342
Maharajpur	...	343
Jambani	...	367
Nimashbani	...	368
Palashbani	...	369
Maldiha	...	372
Khamarbar	...	373
Komarband	...	374
Kaniari	...	375
Gopalpur	...	376
Palashkanda	...	377
Amchura	...	378
Chaltabere	...	379
Aulara	...	380
Godahari	...	381
Sidadihi	...	382
Radhamohanpur	...	383
Mohasol	...	384
Mandalkupi	...	385
Pallagot	...	386
Aushbere	...	387
Khemakata	...	388
Jagannathpur	...	389
Jhatiara	..	390
Bauribund	...	391
Kenduaguri	...	392
Radhanagari	...	393
Golakchak	...	394
Gotkola	...	395
Bulanpur	...	396
Durgadaspur	...	397
Bara-kuli	...	398
Baghghara	...	399
Tilakhuli	...	400
Chak Tarini	. .	401
Gaighata	...	403
Tarini Chak	...	404
Pirrâloha	...	405
Salbani	...	415

Names of mauzas constituting the union with their numbers in the jurisdiction list.		

Garbetta thana.

Amlagora union.

Radhanagar	...	486
Payraura	. .	519
Metiabari	. .	518
Jamkhali	...	516
Balachak	...	517
Shanpur	...	514
Deuli	...	508
Uchaladanga	...	507
Kadabani		509
Bhulkachak	...	511
Judidan	...	510
Gangra	..	498
Khamarberia	..	497
Choto Panchrol	. .	496
Koyta	...	512
Brahmangram	...	513
Bara Pancharol	...	494
Jharbani	...	489
Rauha	...	515
Ganakbandi	..	488
Bandgora	...	487
Taldangra Khas Jungle	. .	478
Ledagamar	...	474
Junsol	. .	479
Amlagora	...	482
Buriami	...	481
Payrabasi	...	480
Bagdoba	...	473
Jamdoba	...	472
Keshia	...	471
Magurasol	...	653

Garbetta union.

Nalbona	...	636
Darji	...	635
Parkhanda	...	630
Teligara	...	631
Sanpdaha	...	632
Bajrakha Bonkati	...	592
Kankrasole	...	593
Tasargeria	...	591
Chenchuria	...	587
Arjunbani	...	588
Sangramchak	..	589
Chandrer Bonkata	...	581
Bheduasol	...	580
Ghorapota	...	582
Khiria	...	579
Chota Talbeta	...	578
Garbetta	...	570

Names of mauzas constituting the union with their numbers in the jurisdiction list.		
Bagdoba	...	571
Baranda	..	572
Baratalbeta	...	577
Hingisol	...	576
Golahat	...	573
Telipara or Mathabhangi	...	574
Moldanga	...	575
Patpur	...	590
Gangani	...	485
Garanga union.		
Dhanyardiha	...	644
Garki	...	648
Nalpa	...	650
Dhankuria	...	651
Chandabila	...	643
Jemuasol	...	641
Dhobaberia	...	642
Mohisahabeli	...	640
Bandarbani	...	638
Kashidanga	...	639
Dakhin Konda	...	634
Garanga	...	633
Dhabani	...	652
Kasthagura	...	649
Khudiasol	...	586
Panchmoldanga	. .	585
Sijdiha or Sikuria	...	583
Pathrisol	...	584
Ghosalband	...	483
Lapuria	...	484
Debra thana.		
Shanrpur union.		
Mankhanda	...	137
Loyada	...	138
Narharipur	...	139
Talberia Ghun Ghuni Patna	..	140
Ghunghuni	...	141
Fatebar	...	142
Murasti	...	143
Monoharpur	...	144
Balarampur	...	145
Goyaspur	...	146
Kolkuria	...	147
Shanrpur	...	148
Chak Bahadur	.	149
Bar Bhunabasan	...	150
Anantabar	...	151
Kankra Horaprasad	...	152
Kankra Shibaram	...	153
Kankra Atmaram	...	154
Kankra Mohanpur	...	155

Names of mauzas constituting the union with their numbers in the jurisdiction list.		
Bhomaria	...	156
Chak Tara	...	157
Damodarpur	...	158
Bakalsa Ramgopal	...	159
Bakalsa Nimcharan	...	160
Bakalsa Sebakram	...	161
Bakalsa Ramnarayan	...	162
Barati	...	163
Jamalchak	...	164
Chakkasi	...	172
Chak Beochia	...	173
Aikola	...	174
Dabadari	...	175
Chak Bisnupur	...	176
Mansingpur	...	177
Dwarkhola	...	178
Khajuri Chak Kakra	. .	179
Chak Bajit	...	180
Kismal Kharigerya	...	181
Jot Narayan	...	182
Gopalgere	...	183
Gotgerya	...	184
Shibarampur	...	185
Kharigerya	...	186
Satrakhi	...	187
Rasulpur	...	188
Dhandangra	...	189
Joy Krishnapur	...	191
Purba Satkona	...	202
Chak Nangulya	...	211
Dhani Jagannathpur	...	212
Jotdaria	...	213
Kalapanja	...	214
Teligerya	...	215
Bar Maisha Jonki	...	216
Harinagerya	...	217
Dhobadangi	...	219
Bhunabasan	...	220
Khasarhati	...	221
Haladharbar	...	222
Bhainagar	...	225

Midnapore.—No. 5915 L.S.4I.—23rd July 1936.—In exercise of the power conferred by section 5 of the Bengal Village Self-Government Act, 1919 (Bengal Act V of 1919), and after consideration of the views of the Midnapore district board and Sadar local board, the Government of Bengal (Ministry of Local Self-Government) are pleased to direct that each of the following local areas in thanas Narayangarh, Khargpur (local), Khargpur Town, Sabang, Pingla, Dantan, Mohanpur and Keshiary in the Sadar subdivision, south of the Midnapore district, shall be declared a union for the purposes of the Act.

2. In exercise of the power conferred by sub-section (*1*) of section 6 of the said Act, the Government of Bengal (Ministry of Local Self-Government) are pleased to establish union boards for each of the unions hereby declared and to fix nine as the number of members of each union board.

3. In exercise of the power conferred by sub-section (*3*) of section 6 of the said Act, the Government of Bengal (Ministry of Local Self-Government) are pleased to direct that one-third of the number of members of each union board shall be appointed by the District Magistrate on the grounds that such appointment is necessary for the due representation of minorities and of different interests within the union.

4. This cancels notification No. 3547-L.S.-G., dated the 2nd August 1924.

Midnapore district board.

Sadar local board.

Narayangarh thana.

Names of mauzas constituting the union with their numbers in the jurisdiction list.

Belda union.

Bontata	...	200
Chanpinagar	...	201
Jalahari Shankar Kara	...	202
Ganga Jamuna	...	204
Sarisa	...	205
Bikalmunda	...	206
Durgapore	...	207
Balipat	...	208
Pariyachak	...	209
Indreswarpur	..	210
Uinandan	...	211
Bhumjan Patli	...	212
Patni Patna	...	213
Siyalia	...	300
Patli	...	301
Maniraj Batitaki	...	302
Sarachak	...	303
Kantabani	...	304
Pustaria	...	305
Kamiachak	...	306
Bengda	...	307
Kaduachak	...	308
Krishnapur	...	309
Raghunath-chak	...	310
Banshidharpur	...	311
Deuli	...	312
Chhoto Matkatpur	...	313
Mahammadpur	...	314
Belda	...	315
Bara Matkatpur	...	316
Haragobindapur	...	317
Shasinda	...	320
Barbalia	...	321

Names of mauzas constituting the union with their numbers in the jurisdiction list.

Gajna	...	322
Panigathia	...	323
Moynapara	...	325
Binodpur	...	328
Kuli	...	324
Bodamara	...	329

Kharagpur (local) thana.

Khelai union.

Shibanandapur	...	248
Chitrapur	...	249
Jadabpur	...	250
Agarpara	...	251
Saraswatipur	...	252
Kasijora	...	253
Tongageria	...	269
Benageria	...	270
Tongachak	...	271
Napitchak	...	272
Kalsigora	.	273
Sikmikalsigeria	...	274
Baishnabchak	...	275
Hemtikri	...	276
Gerebar	...	277
Uttarbali	...	278
Kankuria	...	281
Darkhola	...	282
Keshuria	...	283
Rathbar	...	284
Jamjuri	...	285
Shandapur	...	286
Balla	...	287
Gobradon	...	288
Dude	...	289
Nachna	...	290
Gongadharpur	...	291
Shyamraypur	...	292
Brikabhanupur	...	293
Kismat Balla	...	294
Gaighata	...	295
Debigeria	...	296
Parannagar	...	297
Naraharipur	...	298
Pratapur	...	299
Koyetpur	...	301
Prasadchak	...	300
Shankarachak	...	333
Ramnagar	...	334
Benapur Chaita	...	335
Bhumjan	...	336
Shikharpari	...	337
Raghunathpur	...	338
Raipur	...	339
Banpatna	...	340

Names of mauzas constituting the union with their numbers in the jurisdiction list.		
Nischintapur	...	341
Khelar	...	342
Kuchia Bhuluk	...	343
Bagberia	...	344

Khargpur (town) thana.

Kharida union.

Dewanmar I	...	88
Bhagabanpur	...	141
Kharagpur Khas Jungle	...	142
Tentichati	...	144
Mathurakati Khas Jungle	...	143
Debalpur	.	190
Srikrishnapur	...	191
Bhabanipur	...	192
Nimgeria Patna	...	193
Kharida	...	194
Teghari	...	195
Rajram	...	196
Panchberiamilik	...	233

Sabang thana.

Sabang union.

Jalabindu	...	180
Kundalpat Batitaki	...	181
Ruinan	...	283
Kundalpal	...	182
Harnan	...	284
Gora	...	287
Rakutia	...	288
Rasunchak	...	290
Nakindi	...	291
Souta	...	292
Sabang	...	293

Pingla thana.

Jamna union.

Mohanpur	..	42
Bar Phalashpur	..	43
Phalashpur	...	44
Brahmanbar	...	45
Mondalbar	...	46
Belun	...	47
Dangra	...	48
Rajballav	...	49
Purnagram	...	50
Jonkha	...	51
Jamna	...	33
Bajagera	...	34
Tungur	..	76
Santai	...	82
Pingla	...	83

Names of mauzas constituting the union with their numbers in the jurisdiction list.		
Gopikantabar	..	84
Salmara	...	85
Ujan	...	86
Mianchak	...	87
Gangadaschak	..	90
Madhabchak	...	32

Dantan thana.

Monaharpur union.

Dhalhara	...	67
Doyasti	...	68
Chakjoyram	..	69
Falasia	...	70
Joyrampur	...	71
Punja	...	72
Simulia Uttar *alias* Mogalmari	...	73
Monaharpur	...	74
Panchrol	...	75
Benadubi	..	76
Sijua	...	77
Gopinathpur	...	78
Kajipara	...	79
Kakrajit	...	80
Maliara Sundarpur	...	81
Ganpada	...	82
Bejda	...	83

Angua union.

Pantunia	...	92
Barasati	...	93
Garadpur	. .	94
Lalitapur	...	95
Palasia	...	96
Moyarui	.	97
Malpara	...	98
Hasimpur	...	99
Ramdichak	...	100
Angua	...	101
Mohammadbad	.	102
Parajbhetia	...	103
Banskuni	...	104
Pukharbar	...	105
Jagannathpore	. .	106
Chak Pansi	...	107
Jamua	..	108
Jamuapati	...	109
Balabhadrapur	...	110
Bhetimala	...	111
Jambolia	...	162
Solakhia	...	163
Benapura	...	164
Kholagerya	...	165
Jamjhatia	...	166
Manrui	...	167

Names of mauzas constituting the union with their numbers in the jurisdiction list.		
Tukarui	...	168
Tukpalashia	..	169
Jamgodi	...	170
Sajyadpur	...	171
Gargaria	...	172
Ramgiri Gobindachak	..	173
Mirjpur	.	174
Sonakania	..	175
Anikola union.		
Kharidhapri	...	158
Kontai	...	160
Bindha	...	211
Bajargar Haripur	...	203
Dhalbar	...	205
Bhikubar	...	207
Pargana		209
Biria	..	159
Urisal	.	161
Patchhata	...	202
Kismat Palasia	...	204
Pannaga	...	206
Sindhia	...	208
Dhanhalia	...	212
Sarrang	...	213
Beli	...	215
Anikola	...	217
Binjhageria	. .	219
Anipara	...	335
Gajalpatta	...	210
Karanji	...	214
Haripura		216
Bamanbirua	...	218
Kirtanbeli		334
Bhurangi	...	336
Sauri union.		
Shyamsundarpur urf Sarmana	...	253
Sohagpur	.	254
Babla	...	255
Patpur	...	256
Agarbarchak	...	257
Agarbar	...	258
Mohammadjama	...	259
Patpurchak	...	260
Paharichak	...	261
Krishnabati	...	262
Kachra	...	263
Gokulpur	...	264
Alampur	...	265
Biharichak	...	266
Sauri urf Kotebar	..	267
Lakibar	...	268
Damodarpur	...	269

Names of mauzas constituting the union with their numbers in the jurisdiction list.		
Lalpur	...	270
Sujanchak	. .	271
Shiruchak	. .	272
Ekharukhi		273
Gopalpur	..	277
Lalat	.	278
Bandhrauta	..	279
Mohanpore thana.		
Mohanpur union.		
Jhatia	.	374
Charta	.	375
Kusumda	...	376
Garuia		377
Jamua	...	382
Chyankasia *alias* Kasiabag		383
Mohanpur	.	384
Dirbanagar	...	385
Chhanageria		386
Barabeli	...	387
Chotabeli		388
Chhangeriapatna	. .	391
Bagda		392
Rampura		393
Barabetia	.	394
Palasia		417
Singarui		418
Bhatia	...	416
Garra	.	420
Fildapara	. .	421
Rajnagar		419
Kesiari thana.		
Kesiari union.		
Saharia	...	61
Kalta	...	62
Dasi Sarisa	.	63
Kamar Chowki	...	64
Napo	...	104
Agarpara	...	105
Kesiary	...	106
Anar	...	107
Senna	.	108
Barada	...	115
Sukdubi	.	116
Pirat	...	117
Sipurlalpur	...	118
Hasimpur	...	148
Tentulia	...	149
Kanchanpur	...	150
Arangabad	...	151
Godalipur	...	155
Dehattachak	...	156
Khamardasani	...	158

Midnapore.—No. 5916L. S.-G.—23rd July 1936.—In exercise of the power conferred by section 5 of the Bengal Village Self-Government Act, 1919 (Bengal Act V of 1919), and after consideration of the views of the Midnapore district board and Contai local board, the Government of Bengal (Ministry of Local Self-Government) are pleased to direct that each of the following local areas in thanas Bhagabanpur, Khedgree, Contai, Ramnagar and Egra in the Contai subdivision of the Midnapore district, shall be declared a union for the purposes of the Act.

2. In exercise of the power conferred by sub-section (*1*) of section 6 of the said Act, the Government of Bengal (Ministry of Local Self-Government) are pleased to establish union boards for each of the unions hereby declared and to fix nine as the number of members of each union board.

3. In exercise of the power conferred by sub-section (*3*) of section 6 of the said Act, the Government of Bengal (Ministry of Local Self-Government) are pleased to direct that one-third of the number of members of each union board shall be appointed by the District Magistrate on the grounds that such appointment is necessary for the due representation of minorities and of different interests within the union.

Midnapore district board.

Contai local board.

Bhagabanpur thana.

Names of mauzas constituting the union with their numbers in the jurisdiction list.		
Simulia union.		
Sherpur	...	102
Moniramchak	.	103
Beudia	...	104
Pajankul	..	105
Khajurali	...	118
Chinaberiya	.	119
Anduha	.	120
Kotbar	...	122
Chaitanyachak	..	136
Paryachak	..	135
Bar Bhagawanpur	...	107
Kisorepur	...	114
Rampur	..	115
Banamalipur	..	116
Nunhanda	...	117
Talda	...	121
Simulia		125
Barttan	. .	126
Kulberia	.	124
Katgechia	..	127
Unal		128
Gopalchak	...	129
Srikantapur	...	123
Ramchak	...	134
Shyamchak	...	133

Kajlagarh union (at present known as Kakra)

Bar Kasimpur	...	95
Kakra	...	96
Abasberia	...	97
Tajpur	...	98
Boalia	...	148
Jagumohanpur	.	149
Hinchageria	. .	147
Sarberia	. .	[illegible]
Bhabanichak	...	151
Narayandanri	.	152
Tethaibari	. .	153
Kaktyabari	.	158
Bamunchak		159
Mirzapur	...	160
Betuliabar		99
Barnibar		139

Khedgree Thana.

Dekhali union.

Dekhali	...	20
Haludbari	.	21
Jagannathchak	...	22
Narullachak	...	23
Chauddachuli	...	33
Mundamari	..	34
Kenchia	...	31
Garrang	..	32
Kartikkhali	.	35
Keshabchak		18
Katari	...	24

Contai thana.

Kumirda union.

Shibpur Beltalia	...	41
Kadua	...	42
Kausalya	...	43
Dakshin Nischinta	...	44
Kanpramari	.	45
Paschim Sarpai	...	46
Dumurberia	...	47
Chimankhanbar	.	48
Sarna Nagari	..	49
Bara Natabania	...	50
Kumaria Khan Kakburia	..	51
Dhanghara	...	52
Harinapasdalbar	..	53
Kakhuria	...	54
Sikharpatrabar	.	55
Hapua	...	56
Ghatbar Khan Gurguri	. .	57

Names of mauzas constituting the union with their numbers in the jurisdiction list.		
Baghamahakalia	...	58
Ichhageria	...	59
Seulibar	...	60
Barbari Kutakuti	...	61
Harigechia	...	145
Barabari	...	146
Bar Nawai	...	147
Olmai Dalbar	...	148
Jethaibari	...	149
Sarpai	...	150
Chhota Nawai	...	151
Kancheswar	...	152
Sukunia	...	153
Damua	...	154
Panichiari	...	155
Dakshin Kancheswari	...	156
Rania	...	158
Kumirda	...	159
Ghoratala	...	404

Haipur union.

Bara Musapur	...	98
Saheb Khan Keranibar	...	101
Brajamal	...	102
Khullaneswari	...	103
Ugrasenbar	...	104
Jagannathpur	...	105
Haripur	...	106
Ektarpur Madanmohanbar	...	116
Dhaneswari	...	117
Analberia	...	118
Kulberia	...	119
Dakshin Khasda	...	120
Harichak	...	121
Kanchrageria	...	122
Akgeria	...	123
Dakshin Charaikhia	...	124
Uttar Chraikhia	...	125
Paltaberia	...	128
Teghari	...	129
Uttar Khasda	...	185
Uluberia	...	186
Naraharichak	...	187
Dhanga	..	188
Jagannathchak	...	189
Tedubi	...	184
Nunia	...	192
Rautara	...	193
Maishali	...	194
Surundia	...	195
Kantai	...	228
Kanurautbar	..	114
Laskarpada	...	111
Gopalpur	..	112

Names of mauzas constituting the union with their numbers in the jurisdiction list.		
Kasibhuniabar	...	113
Akandi	...	115
Marra	...	196
Irda	...	197
Sitalpur	...	198
Hamir Mohal	...	199

Durmuth union.

Olma	...	239
Jukibheri	...	240
Rahiora	...	241
Dakhin Pithulia	...	242
Uttar Pithulia	...	243
Ram Chandrapur	...	244
Kargan	...	245
Bhekulia	...	246
Alampur	...	247
Sherpur	...	248
Khal Banamalipur	...	249
Kusumpur	...	250
Haibatpur	...	252
Fatepur	...	253
Jalalpur	...	254
Rasulpur	...	255
Bahit Kunda	...	256
Katigan	...	257
Durmuth	...	258
Bilaspur	...	259
Kashmili	...	260
Nawrichak	...	262
Guagechia	...	377
Betalia Sumil Dingalberia	...	379
Nayapara	...	380
Jasabisha	...	394
Sapai	...	177
Maisadangar	...	178
Baghadanri	...	387
Bhutgaria	...	388
Daisai	...	389
Ratnamala	...	390
Benamuri	...	261

Basantia union.

Chak Gobindaberia	...	486
Choudhuribar	...	487
Kendua	...	494
Chak Hazratpur	...	495
Baizapur	...	496
Safiabad	..	497
Dholmari	...	498
Gokulnagar	.	499
Deulpota 1st part *alias* Kultalia	...	500
Rupnagar	...	503
Krishnalalchak	...	504

Names of mauzas constituting the union with their numbers in the jurisdiction list.

Sikdarchak	...	505
Mohammadapur	...	518
Goshpur	...	519
Kushbani	...	522
Kushbani	...	523
Rasulpur	...	448
Dakshin Aria	...	449
Benichak	...	450
Shyamchak	...	451
Deulpota	...	452
Purba Mukundapur	...	488
Basantia	...	485
Kalikakumari	...	524
Gopinathpur	...	472
Mirzapur	...	520
Neulpota	...	521
Tengar-Eria	...	604

Dariapur Union.

Dahasonamui	...	506
Pratappur	...	507
Haripur	...	508
Ramchak Gopalchak	...	509
Bamunia Nankar	...	510
Bamunia	...	511
Dariapur	...	512
Daulatpur	...	513
Kazichak	...	514
Chhoto Subarnanagar	...	515
Nankar Gopinathpur	...	516
Bhagwanpur	..	517
Bethapukhuria	...	606
Bhowanipur	..	607
Durgapur	...	608
Payra Kola	...	609
Bar Goalia	.	610
Hazra Kola	...	611
Gopalpur	...	619
Pirizpur	...	625
Kalichak	...	626
Kalidasbar	...	627
Bhupatichak	...	628
Bankipur	..	629
Tiakola	...	630
Kaluraibar	...	631
Kanai Chatta	.	632
Gopinathpur	...	605 633
Chaitannapur	...	501
Bara Suoarnanagar	...	502
Gopalchak	..	612
Baghapur	...	620
Dakshin Harishchak	...	621
Uttar Harishchak	...	622
Jagannathpur	...	623
Bhogpur	...	624

Names of mauzas constituting the union with their numbers in the jurisdiction list.

Ramnagar thana.

Karanji union.

Chahaka	...	195
Sitalpur	...	196
Karanji	...	197
Narandia	...	198
Talkatalia	...	199
Bara Rankua	..	200
Narkuli	...	201
Deuli	...	248
Phulbari	...	249
Kalikapur	.	250
Nalguna	...	253
Chhota Kasinathpur	..	193
Bara Kasinathpur	...	194
Kanchibar	...	254
Chakpratappur	..	255
Islampur	...	256
Satbatia		257
Ghol	...	258
Banbar		259
Uttar Sitala	..	260
Dakshin Sitala	.	261
Krishnapur	...	262

Egra thana.

Bathuari union.

Bhandarbaria	...	5
Dakshin Chaumukh	...	6
Katganja	...	7
Gangua	...	8
Paikbar	...	9
Narubhuniya Chak		10
Bamuniabar	.	11
Jagannath Karbar	.	12
Darbar Khanbar	.	13
Nalbar	. .	14
Kotbar		15
Pirizkhan Bar	. .	16
Gangadharbar	. .	17
Dakshinbar	. .	18
Bar Bathuari	.	29
Kismat Bathuari		30
Bathuari		31
Hat Baincha	. .	32
Machhlabar	.	33
Kumbhadharbar	.	34
Kashmali	. .	35
Barabhagia	..	36
Uttar Padma	..	37
Asthichak	. .	38

Names of mauzas constituting the union with their numbers in the jurisdiction list.

Jamua Nachimpur	...	39
Dhalgoda	...	40
Dakshin Padma	...	66
Uttar Kuri	...	71
Ramchak	...	72

Balighai union.

Madhabpur	...	173
Mahanagar	...	175
Mallikpur	...	176
Baichabera	...	177
Haranidhi	...	178
Tolakana	...	179
Bhatda	...	180
Ariapota	...	181
Egra Patna	...	185
Daudpur	...	182
Alipur	...	183
Tentuliagiri	...	29
Baincha	...	30
Gholsundi	...	31
Mirzapur	...	133
Bisharpur	...	134
Farakpara	...	135
Khejurda	...	136
Bazarpur	...	137
Nayapara	...	172
Uladapur	...	174

Midnapore.—No. 5917L.S.-G.—23rd July 1936.—In exercise of the power conferred by section 5 of the Bengal Village Self-Government Act, 1919 (Bengal Act V of 1919), and after consideration of the views of the Midnapore district board and Tamluk local board, the Government of Bengal (Ministry of Local Self-Government) are pleased to direct that each of the following local areas in thanas Panskura, Tamluk, Sutahata, Mahisadal, and Nandigram in the Tamluk subdivision of the Midnapore district, shall be declared a union for the purposes of the Act.

2. In exercise of the power conferred by sub-section (*1*) of section 6 of the said Act, the Government of Bengal (Ministry of Local Self-Government) are pleased to establish union boards for each of the unions hereby declared and to fix nine as the number of members of each union board.

3. In exercise of the power conferred by sub-section (*3*) of section 6 of the said Act, the Government of Bengal (Ministry of Local Self-Government) are pleased to direct that one-third of the number of members of each union board shall be appointed by the District Magistrate on the grounds that such appointment is necessary for the due representation of minorities and of different interests within the union.

Midnapore district board.

Tamluk local board.

Panskura thana.

Names of mauzas constituting the union with their numbers in the jurisdiction list.

Moisera union.

Shyampore	...	12
Kishorepur	...	10
Parulanka	...	11
Paschimgurtola	...	9
Purbagurtola	...	8
Mysora	...	7
Shyam Sundarpatna	...	6
Mugdari	...	5
Radhaballavpur	...	1
Gopal Hazra	...	3
Bikra Chandangeria	...	2
Balarampur	...	4
Sahalajpur	...	27
Chak Gopal	...	28
Birinchibar (Chakpaschimitara)	...	25
Mangloi Shyamballavpur	...	24
Teghari	...	26
Patanda	...	23
Jagatpur	...	16
Rajsahar	...	17
Mohanpur	...	18
Fakirbazar	...	19
Brindabanpur	...	20
Dharanda	...	22
Paschimbakulda	...	21
Purbabakulda	...	30

Panskura union.

Laskardighi	...	63
Uttarpalsa	...	64
Janabar	...	65
Dakhin Gopalpur	...	84
Tilandapur	...	85
Mohatpur	...	66
Simulhanda	...	60
Sanktikri	...	61
Purbapitpore	...	69
Uttarmechagram	...	67
Dakhinmechagram	...	74
Kanakpur	...	82
Naranda	...	83
Balidangri	...	86
Paschim Kalya	...	88
Jandara	...	87

Names of mauzas constituting the union with their numbers in the jurisdiction list.		
Champadali	...	81
Rupdaipur	...	79
Belun	...	80
Bahirgram	...	76
Suranankar	...	75
Bhogpur union.		
Narayanpukuria	...	217
Namalbarh	...	218
Kishorechak	...	219
Kadalia	...	230
Benia	...	229
Bhogpur	...	309
Nandaigazan	...	310
Jhakurkul	...	312
Japhali	...	313
Betberia	...	314
Bagichakumarchak	...	316
Bankurachak	...	315
Bangalpur	...	317
Deriachak	...	318
Tamluk thana.		
Dhalhara union.		
Bamanarha	...	77
Biswas	...	78
Mathuri	...	79
Kasipur	...	84
Uttardhalhara	...	80
Chandramerh	...	81
Khandagram	...	82
Narandari	...	83
Khostikri	...	85
Barkhoskhana	...	86
Khoskhana	...	87
Astara	...	88
Nayabasan	...	89
Sutahata thana.		
Kukrahati union.		
Latpatiya	...	1
Motirampur	...	2
Motiramchak	...	3
Gazipur	...	4
Anarnagar	...	5
Sadaramchak	...	6
Erekhali	...	7
Baishnabchak	...	9
Sridharpur	...	10
Kalipur	...	11
Hariballavpur	...	14
Bachalu	...	12
Dhenkua	...	13
Hiyatpur	...	15

Names of mauzas constituting the union with their numbers in the jurisdiction list.		
Sahapur	...	16
Anarpur	...	17
Babupur	...	18
Mathurapur	...	19
Harinbhasa	...	20
Bar Mohanpur	...	21
Bhujobalchak	...	23
Durgapur	...	24
Goradoro	...	34
Junate	...	35
Mohanpore	...	22
Mahisadal thana.		
Mahisadal union.		
Lakshya	...	103
Gopalpur	...	114
Maslaudpur	...	115
Kismat Naikundi	...	116
Nalubasan	...	123
Garkamalpur	...	112
Terapekhia	...	113
Ghugra	...	140
Sundra	...	141
Ektarpore	...	142
Bagda	...	138
Sarberya	...	139
Kakurda	...	136
Kanchanpore	...	137
Jhaupatra	...	144
Madhyahingli	...	145
Basudebpore	...	143
Nandigram thana.		
Boyal union.		
Mangalchak	...	114
Nayachak Boyal	...	115
Jalpai, Part II	...	116
Boyal	...	117
Kanakpur	...	118
Narayanchak	...	119
Tentulbari	...	120
Dinbhuichak	...	121
Chiranjibpore	...	122
Asadtolya	...	152
Bara Nar Singapur	...	151
Narsinghapur Jalpai	...	153
Balarampur, Part I	...	154
Balarampur, Part II	...	155
Ramchak	...	156
Jalpai, Part III	...	157
Gopalchak	...	158

Names of mauzas constituting the union with their numbers in the jurisdiction list.		
Nandigram union.		
Debipur	...	145
Dhaneswarpore	...	146
Ratanpore	...	147
Bar Jamtolya	...	148
Di-Jamtolya	...	149
Chargalya	...	150
Tajpur	...	210
Nanda Nayakbarh	...	179
Nandigram	...	180
Gadaibalbarh	...	208
Bartolya	...	209
Manikpore	...	212
Haripur	...	211
Priyanagari	...	214
Champainagar	...	215
Srigouri	...	216
Bahadurpore	...	217
Bansrigouri	...	218

Midnapore.- No. 5918 L.S.-G.—23rd July 1936.—In exercise of the power conferred by section 5 of the Bengal Village Self-Government Act, 1919 (Bengal Act V of 1919), and after consideration of the views of the Midnapore district board and Ghatal local board, the Government of Bengal (Ministry of Local Self-Government) are pleased to direct that each of the following local areas in thanas Ghatal, Daspur and Chandrakona in the Ghatal subdivision of the Midnapore district, shall be declared a union for the purposes of the Act.

2. In exercise of the power conferred by sub-section (*1*) of section 6 of the said Act, the Government of Bengal (Ministry of Local Self-Government) are pleased to establish union boards for each of the unions hereby declared and to fix nine as the number of members of each union board.

3. In exercise of the power conferred by sub-section (*3*) of section 6 of the said Act, the Government of Bengal (Ministry of Local Self-Government) are pleased to direct that one-third of the number of members of each union board shall be appointed by the district Magistrate on the grounds that such appointment is necessary for the due representation of minorities and of different interests within the union.

4 This cancels notification No. 2625-L. S.-G., dated the 10th July 1931.

Midnapore district board.

Ghatal local board.

Ghatal thana.

Names of mauzas constituting the union with their numbers in the jurisdiction list.		
Birsingha union.		
Udayganja (Part)	...	47
Birsingha	...	48
Pathra	...	49
Karchia	...	50
Kumarsa	...	51
Arjunari	...	52
Mamrajpur	...	53
Kharar Singpur-Uttar	...	54
Gopinathpur	...	55
Kharar Singpur-Dakshin	...	56
Maricha	...	57
Raghunath Kona	...	58
Thakuranichak	...	61
Dandipore	...	62
Shyamsundarpur	...	63
Kharika	...	72
Jalsora	...	73
Radhanagar	...	78
Daspur thana.		
Chaipat union.		
Ranichak	...	213
Dori Ajodhya	...	214
Chaipat	...	216
Bhuiyara	...	217
Kaijuri	...	218
Benai	...	219
Arit	...	220
Naihati	...	221
Chandrakona thana.		
Jara union.		
Bakcha	...	19
Khejurbari	...	20
Bhandaria	...	21
Kalapat	...	22
Jara	...	152
Tegrya Dharampore	...	154
Ghola	...	155
Pathra	...	160
Koranji	...	161
Sripuskrini	...	162
Sola	...	163
Harinarayanpore	...	164
Tatarpore	...	165
Ramkrishnapur	...	166
Panchmohar	...	167
Sasrageria	...	168
Sitasol	...	169
Bhatanar	...	170
Simana	...	171
Madhabpur	...	172
Naranchak	...	174
Nekarbag	..	175
Belgeria	...	194
Hatpukur	...	195
Arjungeria	...	196

24-Parganas.—No. 5940L.S.-G.—24th July 1936.—In exercise of the power conferred by section 5 of the Bengal Village Self-Government Act, 1919 (Bengal Act V of 1919), and after consideration of the views of the 24-Parganas district board and the Basirhat local board, the Government of Bengal (Ministry of Local Self-Government) are pleased to direct that each of the following local areas in thanas Haroa, Hasnabad and Sandeshkhali, in the Basirhat subdivison of the 24-Parganas district, shall be declared a union for the purposes of the Act.

2. In exercise of the power conferred by subsection (*1*) of section 6 of the said Act, the Government of Bengal (Ministry of Local Self-Government) are pleased to establish union boards for each of the unions hereby declared and to fix nine as number of members of each union board.

3. In exercise of the power conferred by subsection (*3*) of sections 6 of the said Act, the Government of Bengal (Ministry of Local Self-Government) are pleased to direct that one-third of the number of members of each union board shall be appointed by the District Magistrate on the grounds that such appointment is necessary for the due representation of minorities and of different interest within the union :-

24-Parganas district board.

Basirhat subdivision.

Haroa thana.

Names of mauzas constituting the union with their numbers in the jurisdiction list.

I. Salipur union.

Chauhata	1
Andulia	2
Goalpota	3
Janardanpur	4
Khalisadi	5
Kismat Janardanpur	6
Talbaria	7
Haripur	8
Mukundapur	9
Jhinkia	10
Payragachha	11
Bhayda	12
Hariharnagar	13
Kharupala	14
Parchandpur	15
Mandalhat	16
Ramnagar	17
Mathura	18
Ramnathpur	19
Mazampur	20
Bakjuri	21
Akandabaria	22
Salipur	37
Serpur	39

II. Haroa union.

Gorainagar	23
Sankarpur	24
Baganati	25
Nazarnagar	26
Latarbagan	27
Baroj	28
Indali	29
Dakhin Ranigachhi	30
Baltia	31
Nawapara	32
Kalinagar	33
Kulgachi	34
Jhujargachha	35
Kuchiamora	36
Kalianai	38
Jharjha	106
Dihigachhi	108
Sonarhula	109
Khashbalanada	110
Atghara	111
Haroa	112
Paikpara	113
Piyara	114
Mallikpur	115
Adampur	116
Khordachandpur	117
Goalpukur	118

III. Gopalpur union.

Kalikapur	119
Gobaria Abad	120
Ramchakirgheri	121
Munsigheri	122
Dhantala	123
Sadarpur Behala	124
Madartala	125
Trimohini	126
Gopalpur	127
Dirghadaria	128
Bhabanipur	129
Pukhuria	130
Bhubanpur	131
Rameswarpur	132
Jampur	133
Amta	134
Khatra	135
Batagachhi	136
Tentulia Abad	137
Nebutala Abad	138

IV. Chaital union.

Phulbari Abad	140
Amadpur	143
Niruli	144
Niruli Abad	145
Nimchi Abad	146
Bagchar Abad	147
Champah Abad	148
Hoseupur	149
Chanpali	150
Nurpur	151
Bagchar	152
Ghonarban	153
Sultanpur	154
Jaykrishnapur	155
Teoria	156
Paitkolpota Abad	157
Paitkolpota	158
Nimchi	159
Golaghata	160
Ghipukuria	161
Sahebkhali	162
Chaital	163
Uttar Akratala	164

Names of mauzas constituting the union with their numbers in the jurisdiction list.	
V. Uchildaha union.	
Uchildaha	94
Mallikgheri	95
Muchikhola	96
Ramjaygheri	97
Sarabaria	98
Kachurhula	99
Atpukur	100
Behari	101
Haldaha	107
Mahanpur	139
Bachhra Abad	141
Bachhra	142
VI. Kulti union.	
Chatra	40
Narayanpur	41
Meherpur	42
Radhanagar	43
Puratankamarganti	44
Kamarganti	45
Radhanagar Abhirampur ..	46
Samaspur	47
Tegharia	48
Makhala	49
Kulti	50
Laugachhi	51
Telinipara	52
Samla	102
Raykhan	103
Bantosha	104
Ranigachi	105
VII. Minakhan union.	
Sibpur	53
Rajendrapur	54
Pipuldaha	55
Gar	56
Tentultala	59
Laugachhi Abad	60
Debdol	78
Matbari	79
Malancha	80
Malancha Abad	81
Madari	82
Chak Ahammadpur	83
Mauli	84
Baligari	85
Simuldaha	86
Joygram	87
Tapla Kusangra	88
Hatbhanga	89
Bamanpukuria	90
Kusangra	91
Minakhan	92
Balihati	93
VIII. Dhutardaha union.	
Padmapukuria	57
Gar Abad	58
Jhikra	61
Bhatka	62
Kulsini	63
Baukhola	64
Tentulbaria	65
Mahari	66
Kadihati	67

Names of mauzas constituting the union with their numbers in the jurisdiction list.	
Baidyer Ati	68
Dhuturdaha	69
Debitola	70
Bargan Gopalpur	71
Magri	72
Chutki Radhanagar	73
Sandardaha	74
Goaldaha	75
Kharibaria	76
Kumarjol	77
Hashnabad thana.	
I. Bhebia union.	
Garakupi	1
Khorda	2
Jalsira	3
Konanagar	4
Gobindapore	5
Sadigachhi	6
Ghola	7
Sadarpore	8
Murarisaha	9
Pipha-Raghabpur	10
Rajapur	14
Kaugachhi	15
Kerundia	16
Dakshin Bhebia	17
Kharampur Abad	18
Chimta	19
Bhabanipur	20
Kharampur	21
Ramanandapur	22
Nawapara	23
Chalitabaria	24
II. Amlani union.	
Ghanasyampur	11
Habaspur	12
Jambaria	13
Jambaria Abad	25
Par Bhabanipur	26
Kuliadanga Abad	27
Chak Kuliadanga	28
Tegharia	29
Makhalgacha	30
Muragacha	31
Harikati	32
Krishnapara	33
Chandpur	34
Asharia Narayanpur	35
Chhaimalpur	36
Sirajpur	37
Nandanpur	38
Takipur	39
Sundaria	40
Haripur	41
Dhaltukari	42
Mohonpur	43
Raghabpur	44
Mohonpur Abad	45
Amlani	46
III. Bhabanipur union.	
Sulkuni Abad	75
Bhurkunda	76
Ghosalati	77
Bedemari	78
Ichhapur	79

Names of mauzas constituting the union with their numbers in the jurisdiction list.

IV. Rameswarpur union.

Angnara	53
Simulia	54
Chak Tengramari	55
Chak Khanpukur	56
Purab Chak	57
Hasnabad	58
Monoharpur	59
Rameswarpur	60
Kalutola	61
Char Rameswarpur	62
Char Narayanpur	63
Chanpatala	64
Barhunhat	65
Kharur	66
Patli Khanpur	67
Jaygaon	68
Balidanga	69
Ghuni	70
Amrulgacha	71
Bezpatli	72
Bena	73
Chak Patli	74

V. Bispur union.

Durgapur Bayiani	80
Dharambaria	81
Bispur	82
Purba Khejurbaria	83
Paschim Khejurbaria	84
Puberghori	85
Kakuria	86
Dhanikhali	87
Bainara	88
Kumimari	89
Rupmari	90
Banstola	91

VI. Hingalganj union.

Ambaria	94
Sandelerbil	95
Mamudpur	96
Hingalganj	97
Bankra	98
Bankra Dobar	99
Singherkati	100
Khosbas	101

VII. Dukduli union.

Dhandarkhali	92
Kothabari	93
Chhota Sahebkhali	102
Sarapkathi	103
Ketarchak	104
Lebukhali	105
Putia Mathbari	106
Dulduli	107
Pukuria Chak	108
Deuli	109
Sahebkhali	110
Charalkhali	111
Ramapur	114

VIII. Jogesgunj union.

Kanaikati	112
Kathalbaria	113
Madhabkati	115
Patghara	116
Jogeshgunj	117

Names of mauzas constituting the union with their numbers in the jurisdiction list.

Hemnagar	118
Parghumti	119
Sridharkati	120
Malekanghumti	121
Kalitola	122
Samsernagar	123

Sandeshkhali thana.

I. Bayermari union.

Matbari Abad	1
Dhekuammari	2
Petua Dhanihati	3
Khas Sankdaha	4
Sankardaha Abad	5
Bayermari	6
Chunchura	7
Khariat Abad	19

II. Hatgachhi union.

Laukhali Patharghata	8
Agarhati	9
Fakirtakia	10
Rajbari	14
Nalkora	15
Hatgachhi	17
Kaomari	18

III. Akharatala union.

Baunia Abad	20
Nyajat	21
Bayarmari Abad	22
Dakshin Akharatala	23

IV. Kalinagar union.

Putimari	24
Gajalia	25
Ghatihara	26
Ghoshpur	27
Kalinagar	28
Raypur	29
Radhanagar	30
Chhoto Sehara	31
Nityabaria	32
Bara Sehara	33
Bholakhali	36

V. Sandeshkhali union.

Tongtala	34
Bauthakurani	35
Dwarirjangal	37
Dholkhali	38
Khulna	39
Hatgachha	40
Sitalia	41

VI. Bermajhur union.

Rampur	11
Dhamakhali	12
Jhupkhali	13
Bermajhur	16
Bhanga Tushkhali	44
Jeliakhali Purbakhanda ..	45
Jeliakhali Paschimkhanda ..	46

Names of mauzas constituting the union with their numbers in the jurisdiction list.

VII. Tushkhali union.

Atapur	42
Tushkhali	43
Sukdoani	47
Gabbaria	48
Daudpur	49
Joygopalpur	52
Korakati	53
Durgamandap	54
Dhuchikhali	55
Manipur	56

VIII. Kumirmari union.

Radhanagar Pachim	50
Radhanagar Purba	51
Chimta	57
Amtali	58
Puinjali	59
Kumirmari	60
Kalidaspur	61
Taranagar	62
Baramollakhali	63
Radhanagar Dakshin	64
Hetalbari	96
Chhoto Molla Khali	62/100

IX. Shambhunagar union.

Ramnagar	65
Harispur	66
Kamakhyapur	67
Bhupendrapur	68
Sambhunagar	69
Mitrapur	70
Jhaukhali	71
Palpur	72
Jelepara	73
Gopalkata	74
Kamarpara	75
Pathankhali	76
Tentultala	77
Battali	78
Bipradaspur	79
Chandipur	80
Manmathanagar	81
Kachukhali	95

X. Gosaba union.

Gosaba	82
Arampur	83
Birajnagar	84
Bijaynagar	85
Bali	86
Amlamethi	87
Mathurakhanda	88
Sonagan	89
Dulki	90
Pakhiralay	91
Rangabalia	92
Bagbagan	93
Uttardanga	94
Satjalia	97
Deyapur	98
Hamilton Abad	99

24-Parganas.—No. 5890M.- 21st July 1936.—In exercise of the power conferred by section 334 of the Bengal Municipal Act, 1932 (Bengal Act XV of 1932), the Government of Bengal (Ministry of Local Self-Government) are pleased to extend all the provisions of Chapter X of the said Act to the Garden Reach Municipality.

Nadia.—No. 5926M.—23rd July 1936.—In exercise of the power conferred by section 58 (2) of the Bengal Municipal Act, 1932 (Bengal Act XV of 1932), the Government of Bengal (Ministry of Local Self-Government) are pleased to appoint Babu Purna Chandra Chowdhury to be a Commissioner of the Nabadwip Municipality in the district of Nadia, *vice* Babu Kali Das Nandi, deceased.

No. 5931L.S.-G.—24th July 1936.- In exercise of the power conferred by clauses (*l*) and (*m*) of section 138 of the Bengal Local Self-Government Act, 1885 (Bengal Act III of 1885), the Government of Bengal (Ministry of Local Self-Government) are pleased to make the following amendment in the rules published with notification No. 3334L.S.-G., dated the 20th December 1901, as subsequently amended :—

Amendment.

For clause (*d*) of rule 57 *substitute* the following :—

(*d*) Plans and estimates for new works and tools and plant, including live-stock and office furniture, if the cost exceeds Rs. 10,000.	(*d*) Approval of the Commissioner of the Division to be obtained through the Inspector of Local Works.

Medical.

Minister-in-charge: The Hon'ble Sir Bijoy Prasad Singh Roy, Kt.

Rangpur.—No. 3085Medl.—23rd July 1936. Dr. Jamini Kanta Sen Gupta, officiating Civil Surgeon, Rangpur, was granted leave on average pay for two months, under rule 81 (*b*) (*ii*) of the Fundamental Rules, with effect from the 12th May 1936.

No. 3117Medl.—25th July 1936. -Dr. Tara Prosad Singh is granted leave on average pay for two months, under rule 81 (*b*) (*ii*) of the Fundamental Rules in extension of the leave already granted to him in this department notification No. 233-T. Medl., dated the 3rd June 1936.

G. S. DUTT,
Secy. to the Govt. of Bengal

EDUCATION DEPARTMENT.

NOTIFICATIONS.

Minister-in-charge: The Hon'ble Khan Bahadur M. Azizul Haque.

Pabna.—No. 2393Edn.—24th July 1936.—Babu Bidhu Bhusan Das Gupta, Assistant Head Master, Pabna Zilla School, acted in the Bengal Educational Service as Head Master of the school for sixteen days, from the 27th April 1936, during the absence, on leave, of Maulvi Sadaruddin Ahmed.

Calcutta.—No. 2408Edn.—25th July 1936.—In exercise of the powers conferred by section 5 of the Calcutta University Act, 1857 (Act II of 1857), the Government of Bengal (Ministry of Education) are pleased to re-appoint Mr. Syamaprasad Mookerjee, M.A., B.L., Barrister-at-Law, to the office of Vice-Chancellor of the University of Calcutta.

H. GRAHAM,

Secy. to the Govt. of Bengal.

Orders by the Director of Public Instruction, Bengal.

Calcutta.—No. 38B.—17th July 1936.—Khan Bahadur Maulvi Abdul Latif Khan, Personal Assistant to the Director of Public Instruction, Bengal, in the scale of Rs. 400—20—600, is declared, in terms of rule 81(*b*)(*ii*) of the Fundamental Rules, to have been on leave on average pay for the period from 4th June 1936 to 11th July 1936, both days inclusive.

2. This cancels this office notification No. 30B., dated 16th June 1936.

J. M. BOTTOMLEY,

Director of Public Instruction, Bengal.

Orders by the Inspector-General of Registration, Bengal.

Tippera-Noakhali.—No. 430.—21st July 1936.—Maulvi Abul Khair Asadulla, formerly Sub-Registrar of Matlab, in the district of Tippera, is appointed to be the Sub-Registrar of Daganbhuiya, in the district of Noakhali, with effect from the date on which he has joined the appointment.

Burdwan.—No. 431.—21st July 1936.—Lala Praphulla Prokash Nanday, Sub-Registrar attached to the Sadar Registration office at Burdwan, acted as Sub-Registrar of Asansol in the same district from the afternoon of the 18th June 1936 to the 1st July 1936 (inclusive), during the absence, on leave, of Babu Shib Chandra Banarji.

Burdwan.—No. 432.—21st July 1936.—Babu Shib Chandra Banarji, Sub-Registrar of Asansol, in the district of Burdwan, is allowed leave on average pay for three months, under rule 81 (*b*) (*ii*) of the Fundamental Rules, with effect from the 19th June 1936.

Nadia-Dinajpur.—No. 433.—23rd July 1936.—Maulvi Hakimuddin Ahmad, Sub-Registrar of Mirpur, in the district of Nadia, is appointed to be Sub-Registrar of Gangarampur, in the district of Dinajpur.

Nadia-Dinajpur.—No. 434.—23rd July 1936.—Babu Atulya Dhan Bagchi, Sub-Registrar of Balurghat, in the district of Dinajpur, on leave, is appointed to be Sub-Registrar of Mirpur, in the district of Nadia.

This cancels this department notification No. 377, dated the 26th June 1936, appointing him to be Sub-Registrar of Gangarampur, in the district of Dinajpur.

Rajshahi.—No. 435.—23rd July 1936.—Babu Hirendra Nath Mandal, Sub-Registrar of Atrai, in the district of Rajshahi, is allowed leave on average pay from the 18th August 1936, or any subsequent date on which he may be relieved, to the 17th October 1936 (inclusive).

Dacca.—No. 436.—23rd July 1936.—This department notification No. 365, dated the 22nd June 1936, granting leave on average pay for one month from 29th June 1936 to Babu Sanjib Chandra Ghosh, Sub-Registrar of Harirampur (Lesraganj), in the district of Dacca, is cancelled.

Dacca.—No. 437.—23rd July 1936.—This department notification No. 366, dated the 22nd June 1936, appointing Maulvi A. M. Azharul Islam Bhuia, Sub-Registrar attached to the Sadar Registration office at Dacca, to act as Sub-Registrar of Harirampur (Lesraganj) in the same district, is hereby cancelled.

Nadia.—No. 438.—23rd July 1936.—Maulvi Hakimuddin Ahmad, Sub-Registrar of Mirpur, in the district of Nadia, is allowed leave on average pay, under rule 81(*b*)(*ii*) of the Fundamental Rules, for two days on the 24th and 25th June 1936.

S. CHATTERJEA,

Inspr.-Genl. of Registration, Bengal.

COMMERCE DEPARTMENT.

NOTIFICATIONS.

No. 4968Com.—22nd July 1936.—In exercise of the power conferred by section 11 of the Bengal Electricity Duty Act, 1935 (Bengal Act X of 1935), the Governor in Council is pleased to make the following amendment in the Bengal Electricity Duty Rules, 1935, published under Bengal Government notification No. 5250Com., dated the 1st June 1935, as amended by notification No. 9111-Com., dated the 5th September 1935 :—

Amendment.

At the end of sub-rule (*1*) of rule 11 of the said rules *add* the following sentence :—

" He shall, at the same time, forward a copy of such return to the Electrical Adviser and Chief Electric Inspector, Bengal."

No. 5072Com.—22nd July 1936.—The following notice published by Messrs. S. K. Basu and Company in the *Statesman* of the 8th, 9th and 10th July 1936, is republished for general information in accordance with rule 13(*4*) of the Indian Electricity Rules, 1922, framed by the Government of India under section 37 of the Indian Electricity Act, 1910 (IX of 1910). Any objection, suggestion or representation which may be received by the Secretary to the Government of Bengal, Commerce Department, up to the 8th October 1936, from any person, company or local authority, in respect of the application of Messrs. S. K. Basu and Company will be considered by Government.

E. N. BLANDY,
Secy. to the Govt. of Bengal.

The Jessore Electric License, 1936.
(Draft License.)

License for the supply of energy granted by the Government of Bengal, under the Indian Electricity Act, 1910, as amended up to 1st of May 1922.

License is hereby granted to Messrs. S. K. Basu and Company, having its office at 4, Sankaritolla East Lane, Calcutta, carrying on business under the name and style of Messrs. S. K. Basu and Company, to supply electrical energy in the area with the powers and upon the terms and conditions all specified below.

Short Title.

1. This license may be cited as " The Jessore Electric License, 1936."

Interpretation.

2. The several words, terms and expressions to which by the Indian Electricity Act, 1910, or by the Rules thereunder meanings are assigned, shall have the same respective meanings, provided that in this license :—

(1) The Act shall mean the Indian Electricity Act, 1910, and any statutory modifications thereof.

(2) The expression " the licensees " shall mean and include the said Messrs. S. K Basu and Company and their permitted assigns.

(3) The expression " deposited map " shall mean the plan of the area of supply hereinafter specified which has been deposited with the Government in pursuance of the rules under the Act, which plan is signed for the purpose of identification by the Secretary to the Government of Bengal in the Commerce Department, and by the applicant under the name and style of Messrs. S. K. Basu and Company.

(4) The term " Unit " shall mean the quantity of electrical energy equivalent to a current of one thousand ampéres flowing under the electromotive force of one volt during one hour.

Security.

3. The period within which under clause 1 (*b*) of the Schedule to the Act, the licensee shall deposit or secure such sum as therein mentioned and the sum so to be deposited or secured, shall, unless otherwise ordered by the Government under that clause, be six months after the notification of grant of license and Rs 2,000 only respectively.

Area of supply.

4. The area above referred to within which the supply of energy is authorised by this license (the area of supply under the Act) is the whole of the area bounded as follows :—

North—By a line running from point " A " at the crossing of Jinaidah Road and Ghosepara Road to a point marked " B " at the end of Barandy Main Road on the river Bhairab.

East—By two lines, one running from point " B " to a point marked " C " at the crossing of Nilganza Road and Bagchar Road and the other from " C " to a point marked " D " at the crossing of Jamadarpara Road and Jessore-Khulna Road.

South—By Jessore-Khulna Road.

West—By a line running from a point marked " E " at the crossing of Jessore-Khulna Road and Jessore-Calcutta Road to " A," the boundaries whereof are delineated in the deposited map with red lines.

Situation of the Generating Station.

5. The licensees shall erect the generating station within the area covered by the license.

Limits within which the supply of energy is to be compulsory.

6. (*1*) The licensees shall within two years from date of grant of this license lay down suitable and sufficient feeders and distributing mains and also execute works to the satisfaction of the Government for the purpose of supplying electrical energy in the streets named in the list appended below, shall erect the generating station with all the machinery and apparatus necessary for the purpose of giving a continuous and efficient supply and shall do all other works necessary for commencement of supply of energy to the consumers.

Nature of supply.

7. Nature of supply—The systems of supply which may be adopted for the supply of electrical energy under this license are the following :—

(*1*) A medium pressure alternating current, three-phase, four-wire supply at a pressure, at the consumers' terminals, of 400 volts between phases and low pressure of 230 volts between phases and neutral, at a frequency of 50 cycles per second.

(*2*) A high pressure alternating current, three-phase supply at a pressure, at the consumers' terminals, of 3,000 volts between phases, at a frequency of 50 cycles per second.

Limits of price to be charged for the supply of energy.

A.—For domestic purposes—metered supply.

8. (*1*) Light and/or fans—Annas eight per unit metered, subject to a minimum charge of Re. 1-8 per month, exclusive of meter rent, for each K. W. of connected load or part thereof.

(*2*) For heating, cooking, refrigerating and all other purposes other than light and fans—Annas four per unit metered.

B.—Unmetered supply.

(*3*) Rupees three per 30 watts lamp per month and proportionately for lamps of higher wattage to be used only in stalls and for period not exceeding six hours daily from sunset.

C.—For Industrial purposes.

(*1*) For each installation having motors in which the aggregate rated brake horse power does not exceed 5 B.H.P.—Annas four per unit metered subject to a minimum charge of Rs. 60 per annum per rated B. H. P. of all motors installed.

(*2*) For each installation having motors in which the aggregate rated brake horse power exceeds 5 B. H. P. and does not exceed 10 B. H. P.—Annas three per unit metered subject to a minimum charge of Rs. 60 per annum per rated B. H. P. of all motors installed.

(*3*) For each installation having motors in which the aggregate rated brake horse power exceeds 10 B. H. P. and does not exceed 25 B. H. P—Annas two and pies six per unit metered subject to a minimum charge of Rs. 60 per annum per rated B. H. P. of all motors installed.

(*4*) For each installation having motors in which the aggregate rated brake horse power exceeds 25 B. H. P.—Annas two per unit metered subject to a minimum charge of Rs. 60 per annum per rated B. H. P. of all motors installed.

Or, in the case of a method of charge approved by the Government in accordance with clause X of the Schedule to the Act, such maxima as the Government may fix on approving the matter.

Variation from Schedule to the Act.

9. (*1*) In pursuance of clause (*f*) of sub-section (*2*) of section 3 of the Act, it is hereby expressly declared that for the words "three years" in clause IV of the Schedule to the Act, the words "two years" shall be substituted.

Breaking up of streets.

10. The licensees are specially authorised to open and break up the soil and pavement of the following streets or parts of streets which are not repairable by the Government or by a local authority and of the following railway and tramways or parts of railways and tramways, viz., the Eastern Bengal Railway at the level crossings marked X and Y on the deposited map.

Purchase of undertaking.

11. (*1*) The option of purchase given by section 7, sub-section (*1*), of the Act, shall first be exercisable on the expiration of fifty years from the date of the notification of this license and on the expiration of every subsequent period of twenty years (and the terms of such purchase shall be as laid down in the Indian Electricity Act). The percentage of the value to be determined in accordance with and for the purpose of section 7 (*1*) of the Act, of lands, buildings, works, materials and plant of the licensees therein mentioned to be added under the second proviso of that sub-section to such value on account of compulsory purchase, shall be 20 per cent.

(*2*) In accordance with section 3, sub-section (*2*), clause (*d*) (*ii*), of the Act, it is hereby declared that the generating station to be used in connection with the undertaking shall form part of the undertaking for the purpose of purchase under section 5 or section 7 of the Act.

Schedule.

The list of streets referred to in clause 6 (*1*).

Jinaidah Road from new Collectorate Road to the crossing of Peterson Road, Strand Road up to the crossing of Khaldhar Road, Mistrikhana Road, Kapuriaputty Road, Loan Officepara Road, Narail Tank Road, U. C. Ghose Lane, Nilganja Road up to the crossing of Khaldhar Road, Railway Road, Girls' School Road, Gurudas Babu's Lane, Harinath Dutta Lane, Laldhigi Tank Road, Jessore-Calcutta Road from Railway Road to Dakbungalow Road, New Collectorate Road, Playground Road, Smith Road, Bhola Tank Road, Dakbungalow Road.

A copy of the deposited map may be inspected at the company's office where copies of draft license may be obtained at a price of Rupee one per copy.

Every local authority, Company or person desirous of making any representation with reference to the application, to the local Government may do so by letter addressed to the Secretary to the local Government in the Commerce Department, within three months of the date of issue of the newspaper containing this advertisement, *i.e.*, 8th July 1936.

MARINE DEPARTMENT.

NOTIFICATION

No 20 Mne —27th July 1936 —In exercise of the power conferred by section 19 of the Inland Steam-vessels Act, 1917 (I of 1917), the Governor in Council is pleased to make the following amendment in the rules relating to the survey of inland steam or motor vessels, published under this department notification No 50Mne., dated the 22nd November 1930

Amendment.

After rule 4 of the said rules the following new rule shall be *inserted*, namely —

"4A For survey purposes inland waters shall be classed as smooth or partially smooth. The limits of smooth and partially smooth waters are shown in the following table —

Table

Name of place	Smooth water	Partially smooth water
1	2	3
Hooghly river	Above line joining Hughli Point and Fort Mornington	*From 15th March to 30th September.* Between the southern limit of smooth water and a line drawn from the Southern Point at the entrance of the Haldia river to the Northern Point of Lash's Island and down the Boratola river to a line connecting the southern entrance of the Dongra khal and Johnson's Point in Saugor Island *From 1st October to 14th March* Between the southern limit of smooth water and a line drawn from 1½ mile due south of Saugor Light House to the entrance of the Hooghly or Rupnarain river (which is the present southern limit).
Meghna river	*1st October to 14th March* Above line running west from Chandpur	*1st October to 14th March* Below line running west from Chandpur to Inland Water Limits
	15th March to 30th September Above line running west from Cazoria hat	*15th March to 30th September* Between the southern limit of smooth water and a line joining Choranaddy Ishaha Ghat and Lalmohanj.
Ganges river	*15th March to 30th September* Above Goalundo .. *1st October to 14th March* Above Chandpur	*15th March to 30th September.* Between the southern limit of smooth water and Chandpur
Dhamra river ..	Above Chandbali .	Between the southern limit of smooth water and a line joining Point Palmyras and New Chandipal Beacon
Roopnarain river	West of line joining Fort Mornington and Tumluk Point	Nil
False Point	Inside the harbour	Nil.
Chittagong river	*1st April to 30th September* Above Lower Harbour limits *october to March* Above Juldia	Between the southern limit of smooth water and a line joining Normans Point Light House and the western extremity of the land forming the northern entrance to the Karnafuli River locally known as Patenga Point.

E N BLANDY,
Secy to the Govt of Bengal.

PUBLIC WORKS DEPARTMENT.

Communications.

NOTIFICATION.

Minister-in-charge: The Hon'ble Nawab Sir Mohiuddin Faroqui, Kt., of Ratanpur.

No. 7C.—25th July 1936.—In exercise of the powers conferred by section 8 of the Howrah Bridge Act, 1926 (Bengal Act IV of 1926), the Government of Bengal (Ministry of Public Works) are pleased to direct that the taxes leviable under clauses (*i*), (*ia*), (*ii*), (*iv*) and (*v*) of section 8 of the said Act shall be levied with effect from the 1st day of January 1937 at the maximum rates mentioned therein and shall be collected by the respective authorities mentioned in sub-sections (*1*), (*1a*), (*3*) and (*4*) of section 9 of of the said Act.

H. S. E. STEVENS,

Secy. to the Govt. of Bengal.

DEPARTMENT OF AGRICULTURE AND INDUSTRIES.

Industries.

NOTIFICATIONS.

Minister-in-charge: The Hon'ble Nawab Sir Mohiuddin Faroqui, Kt., of Ratanpur.

Malda.—No. 4657Ind.—21st July 1936.—Babu Sailendra Kumar Moulic, Sericultural Inspector, Malda, is appointed to act as Superintendent of Sericulture, Malda, with effect from the 9th July 1936, *vice* Rai Sahib Surendra Nath Bose, on leave.

24-Parganas.—No. 4786Ind.—23rd July 1936.—The orders issued with this department resolution No. 87T.A.I., dated the 1st May 1936, sanctioning a loan of Rs. 6,000 under the Bengal State Aid to Industries Act, 1931 (Bengal Act III of 1931) to Khan Bahadur Taffazzul Ahmed of village Subarnapur, police-station Deganga, district 24-Parganas, for the purpose of developing his existing sugar factory at Subarnapur in that district for manufacture of sugar by open pan system, are hereby cancelled.

Forests.

NOTIFICATIONS.

No. 903For.—22nd July 1936.—Mr. J. C. Nath, Deputy Conservator of Forests, Bengal, is allowed leave on average pay for the period from the 2nd July 1936, or from any subsequent date on which he avails himself of it, to the 17th October 1936, under rule 81(*b*)(*ii*) of the Fundamental Rules.

Chittagong-Chittagong Hill Tracts.—No. 911For.—23rd July 1936.—In exercise of the powers conferred by section 6 of the Elephants' Preservation Act, 1879 (VI of 1879), the Governor in Council is pleased to prescribe the following license form for killing mature male wild elephants in the districts of Chittagong and the Chittagong Hill Tracts :—

Form of license to kill mature male wild elephants.

Mr..... of ..... is hereby permitted to kill mature male wild elephants wherever found within the area defined below in the proportion of one tusker to one *makhna* subject to the following conditions :—

(1) That this license is subject to the provisions of the Elephants' Preservation Act, 1879 (VI of 1879).

(2) That male elephants shall not be shot when accompanying a herd.

(3) That wounded elephants shall be followed up as far as possible but not into a Game Sanctuary without the permission of the Officer-in-charge.

(4) That full details in writing shall be reported without delay to the nearest Forest Office of all wounded elephants that have escaped.

(5) That a Forest Guard shall accompany the licensee as a guide and interpreter as well as check on what is shot and that the licensee shall pay for the services of such guard at the rate of Rs. 20 per mensem.

(6) That information regarding elephants killed shall be sent at once to the nearest Forest Office.

(7) That provided the conditions of this license are otherwise fulfilled the licensee may keep the tusks of one tusker for each *makhna* shot.

(8) That tusks shall be taken to the nearest Forest Office, or such Forest Office as the Divisional Forest Officer may direct and not moved thence unless covered by a transit pass which will be issued immediately, if the destruction of a corresponding *makhna* has already been duly recorded, otherwise the tusks remain the property of Government until a corresponding *makhna* shall have been killed. The tusks will be disposed of by Government after the expiry of 12 months, or on non-renewal of this license, whichever is earlier, if no *makhna* is killed within this period.

(9) That the licensee shall be in possession of a weapon of sufficient bore or power to kill rather than only wound elephants.

(10) That this license expires on 30th June 19 , but is subject to summary cancellation at any time.

Application for renewal should be made to the Collector, Chittagong, and the Deputy Commissioner, Chittagong Hill Tracts.

(11) Area within which this license is valid :—

Dated . .....

Seal and signature of

Collector or Deputy Commissioner,

.....district.

I accept the above license with all its terms and conditions which I understand.

....

Licensee.

Note 1.—This license does not refer to the killing of elephants proclaimed by the Collector of Chittagong and the Deputy Commissioner of the Chittagong Hill Tracts under the provisions of the Elephants' Preservation (Bengal Amendment) Act, 1932, but the killing by the licensee of a proclaimed *makhna*, for the destruction of which no reward is offered, will entitle him to shoot one tusker under this license.

Note 2.—Copies of the license form may be obtained from the Collector, Chittagong, and the Deputy Commissioner, Chittagong Hill Tracts, and also from the Conservator of Forests, Bengal, 35, Gopalnagore Road, Alipore, Calcutta. A special permit for carrying arms and ammunition in the Hill Tracts as well as in Chittagong should also be obtained from the District Officers concerned. Applicants should give detailed description of the weapons they propose to use. Full particulars on any point are obtainable from the Conservator of Forests, Bengal.

H. S. E. STEVENS,

Secy. to the Govt. of Bengal

Orders by the Conservator of Forests, Bengal.

Sundarbans.—No. 8643For.—20th July 1936.—Babu Suresh Chandra Basu, Extra Assistant Conservator of Forests, attached to the Sundarbans Division, is allowed leave on average pay for six weeks, under rule 81(*b*)(*ii*) of the Fundamental and Subsidiary Rules, with effect from the 16th July 1936 or any subsequent date from which he is relieved of his duties.

He is likely to return to duty at the same station or to another station in which he will be entitled to a similar compensatory allowance as is attached to his post at present.

W. MEIKLEJOHN,

Conservator of Forests, Bengal.

Orders by the Director of Agriculture, Bengal.

No. 11948.—24th July 1936.—Babu Chuni Lal Mustafi, Chief Superintendent, Dacca Farm, is granted leave on average pay for twenty-one days, with effect from 3rd July 1936, under rule 81(*b*)(*ii*) of the Fundamental Rules.

K. MCLEAN,

Director of Agriculture, Bengal.

Orders by the Registrar of Co-operative Societies, Bengal.

No. 12328.—23rd July 1936.—In modification of this office notifications No. 80-L., dated the 15th December 1933, and No. 23-L., dated the 21st November 1934, so far as they relate to the appointment of the Inspector of Co-operative Societies, Serajganj, as liquidators of Bankirhat Co-operative Bank and Darupara Co-operative Bank, respectively, in the district of Pabna, I hereby appoint the departmental officer in charge of Ullapara Circle as liquidator of the said societies.

No. 12330.—23rd July 1936.—In modification of this office notification No. 124-L., dated the 1st April 1932, so far as it relates to the appointment of the Inspector of Co-operative Societies, Tangail, as liquidator of the Pogaldighi Samabaya Samity (Regd. No. 51-D of 1922), in the district of Mymensingh, I hereby appoint the Auditor of Co-operative Societies in charge of Co-operative Societies, Sarisabari Circle, instead as liquidator of the said society.

A. M. ARSHAD ALI,

Regr., Co-operative Societies, Bengal.

REVENUE DEPARTMENT.

Land Revenue.

NOTIFICATIONS.

Dacca. — No. 10091L.R. — 14th July 1936. — In exercise of the power conferred by sub-section (2) of section 3 of the Bengal Agricultural Debtors Act, 1935 (Bengal Act VII of 1936), the Governor in Council is pleased to appoint the following persons to be Chairmen and members respectively of the undermentioned Debt Settlement Boards in the Dacca district for a term of three years, with effect from 10th August 1936 :—

Sadar (North) subdivision.

Kaliganj Debt Settlement Board.

1. Babu Jitendra Narayan Datta Gupta, Member and Chairman.

Members.

2. Babu Nighore Ch. Datta, B A.
3. Rai Sahib Jogesh Ch. Datta Gupta.
4. Munshi Wajuddin.
5. Maulvi Abul Hamid Choudhury.

Toke Debt Settlement Board.

1. Babu Jogendra Nath Bhowmik, Member and Chairman.

Members

2. Rai Sahib Jogindra Nath Banerji.
3. Munshi Abdur Rahman Sarkar.
4. Munshi Abdur Rahman Bepari.
5. Munshi Nachu Afrad.

Kapasia Debt Settlement Board.

1. Babu Akshya Kumar Karmakar, Member and Chairman.

Members.

2. Babu Gobinda Ch. Saha
3. Munshi Mahammad Daulat Khan.
4. Munshi Jahad Darji.
5. Munshi Nazir Akun.

Balia Debt Settlement Board.

1. Maulvi Saiyuddin Rahman Khan, Member and Chairman.

Members.

2. Munshi Kalimuddin Sarkar
3. Babu Makhanlal Saha.
4. Munshi Piarali Sarkar.
5. Babu Abani Mohan Sen

Tetuljhora Debt Settlement Board.

1. Babu Ramesh Chandra Sen, Member and Chairman.

Members.

2. Babu Hiralal Saha.
3. Babu Nagendra Mohan Choudhury.
4. Maulvi Mahammad Moslem
5. Munshi Giasuddin.

Kusura Debt Settlement Board.

1. Babu Harendra Kumar Chakravorty, Member and Chairman.

Members.

2. Hazi Abdul Gani Sarkar.
3. Munshi Yar Hossain Khan.
4. Babu Balaram Ray.
5. Babu Sitanath Das.

Sadar (South) subdivision.

Joypara Debt Settlement Board.

1. Maulvi Abdul Jabbar Bhuya, Member and Chairman.

Members.

2. Babu Kailash Chandra Saha.
3. Babu Ananda Chandra Saha.
4. Munshi Mahammad Dengar Khan.
5. Hajhi Abdul Baki.

Galimpur Debt Settlement Board.

1. Maulvi Choudhury Asad Ali Beg, Member and Chairman.

Members.

2. Babu Hari Lal Saha.
3. Babu Jitendra Nath Bose.
4. Maulvi Khondakar Habibar Rahaman.
5. Maulvi Ahmed Khan.

Konda Debt Settlement Board.

1. Babu Jnanendra Chandra Ganguly, Member and Chairman.

Members.

2. Babu Ashutosh Pal.
3. Babu Ram Kanai Bhowal.
4. Munshi Naimuddin.
5. Munshi Asmatali Molla.

Narayanganj subdivision.

Bandar Debt Settlement Board.

1. Babu Sachindra Narayan Sen, Member and Chairman.

Members

2. Babu Kunja Mohan Poddar.
3. Maulvi Towkid Hossain.
4. Munshi Afsaruddin.
5. Munshi Ismail Alias Illal Munshi.

Raipura Debt Settlement Board

1. Maulvi Wajedali Khan, Member and Chairman.

Members.

2. Babu Beni Madhab Roy.
3. Babu Raj Kumar Pal Choudhury.
4. Maulvi Aftabuddin Khandakar.
5. Maulvi Sayedali Khandakar.

Fatulla Debt Settlement Board.

1. Babu Manindra Chandra Das, Member and Chairman.

Members

2. Munshi Misirali Mia
3. Munshi Baburali

Manikganj subdivision

Krishnapura and Atigram Debt Settlement Board.

1. Maulvi Muhammad Mir Ali, Member and Chairman.

Members.

2. Babu Jogesh Chandra Roy.
3. Babu Kamakhya Charan Sen
4. Maulvi Abdur Rahman Dewan
5. Dr. Salimuddin Ahmed

Baliati-Saturia Debt Settlement Board

1. Babu Nripendra Kumar Roy Choudhury, Member and Chairman.

Members.

2. Babu Shyamalal Saha.
3. Babu Nagendra Mohan Roy.
4. Maulvi Abdur Rahman Khan
5. Maulvi Mainuddin.

Dighi and Jaigir Debt Settlement Board.

1. Maulvi Mafizuddin Ahmed, Member and Chairman.

Members.

2. Babu Suresh Chandra Saha.
3. Babu Umesh Chandra Chakravorty.
4. Maulvi Abdus Samad Khan
5. Maulvi Alimuddin Munshi.

Paril-Boldhara Debt Settlement Board.

1. Khan Sahib Maulvi Nazibuddin Ahmed, Member and Chairman.*

Members.

2. Babu Satindra Bhusan Sen.
3. Babu Hiralal Saha Mondal.
4. Maulvi Mosharaff Hossain.
5. Maulvi Idrisali Bepari.

Gala Debt Settlement Board

1. Maulvi Majibuddin Ahmed, Member and Chairman.

Members.

2. Babu Sridhar Chakraborty.
3. Babu Purna Chandra Saha.
4. Maulvi Abdul Habib Biswas
5. Maulvi Ahmedali Molla.

Balora Debt Settlement Board.

1 Khan Sahib Maulvi Raushanuddin Ahmed, Member and Chairman.

Members.

2 Babu Rajendra Lal Saha Roy.
3. Babu Shyamacharan Roy.
4. Munshi Safiuddin Ahmed.
5. Babu Aswini Kumar Sen.

Sibalaya Debt Settlement Board.

1. Babu Jagadish Chandra Goswami, Member and Chairman

Members.

2. Babu Jagat Bandhu Nath.
3. Babu Gopal Chandra Nath.
4. Maulvi Ganial Bauki.
5. Maulvi Ijuddi Mollah.

Munshiganj subdivision.

Mollakandi Debt Settlement Board.

1. Rai Sahib Nagendra Bose, B.A., Member and Chairman

Members.

2. Babu Bhim Chandra Saha.
3 Babu Indra Mohan Gope.
4. Munshi Abdul Majid.
5. Munshi Dhukai Sarkar.

Latabdi Debt Settlement Board.

1 Babu Tripura Charan Ghosa, B.A., Member and Chairman.

Members.

2. Babu Akhil Chandra Saha.
3. Munshi Hisabdi Molla.
4. Babu Bharat Chandra Sarkar.
5. Munshi Sabu Sarkar.

Kukutia Debt Settlement Board.

1. Babu Ashutosh Howladar, Member and Chairman

Members.

2. Babu Nibaran Ch. Chakraborty.
3 Babu Rasik Ch. Banerjee.
4. Munshi Gorib Hossain Khan.
5. Maulvi Jigir Ali Halder.

Gaodia Debt Settlement Board.

1. Babu Pran Kumar Banerjee, Member and Chairman.

Members.

2 Babu Apatta Chandra Sur
3 Babu Thakur Das Nath
4. Munshi Habibar Rahaman
5. Munshi Mahammad Hossain Haldar.

Mymensingh.—No. 10092L.R.—14th July 1936.—In exercise of the power conferred by sub-section (2) of section 3 of the Bengal Agricultural Debtors Act, 1935 (Bengal Act VII of 1936), the Governor in Council is pleased to appoint the following persons to be Chairmen and members respectively of the undermentioned Debt Settlement Boards in the Mymensingh district for a term of three years with effect from 10th August 1936 :—

Tangail subdivision.

Nandanpur Debt Settlement Board.

1 Maulvi Abdul Aziz, Member and Chairman.

Members.

2. Babu Kushodwaj Roy Choudhury.
3. Dr. Sachindra Nath Roy.
4. Maulvi Korbanulla Ahmed.
5. Maulvi Jafiruddin Ahmed.

Jamurki Debt Settlement Board.

1. Maulvi Abdul Hamid Khan Choudhury, Member and Chairman.

Members.

2. Babu Haridas Choudhury.
3. Babu Girindra Kumar Roy Choudhury.
4. Dr. Syemuddin Ahmed.
5. Maulvi Necajali Sarkar.

Ellenga Debt Settlement Board.

1. Babu Sarat Kamal Bhattacharjee, Member and Chairman.

Members.

2. Maulvi Abdul Karim Khan.
3. Syed Ali Ajgar Choudhury.
4. Babu Surendra Nath Bhowmic.
5. Babu Debi Charan De Choudhury.

Kishoreganj subdivision.

Banagram Debt Settlement Board.

1. Babu Romesh Chandra Roy, Member and Chairman.

Members.

2. Maulvi Sahebuddin Khan.
3. Maulvi Ishaque Bhuya.
4. Babu Saroj Bandhu Roy.
5. Maulvi Hafizuddin Khan.

Kuliarchar Debt Settlement Board.

1. Maulvi A. F. M. Nurulla, Member and Chairman.

Members.

2. Maulvi Fazlur Rahaman.
3. Maulvi Mahammad Joadali.
4. Babu Kshetramohan Roy.
5. Babu Sasi Bhusan Banik.

Pakundia-Jangalia Debt Settlement Board.

1. Maulvi Golam Moula, B.L., Member and Chairman.

Members.

2. Maulvi Khorsheduddin Ahamed, M.A, B.L.
3. Maulvi Mahiuddin Ahmed, B.A., B.T.
4. Babu Mathura Nath Saha.
5. Babu Jogananda Sen Gupta.

Jamalpur subdivision.

Ranagachha Debt Settlement Board.

1. Babu Sushil Kumar Bose, M.A., Member and Chairman.

Members.

2. Babu Purna Chandra Shaha.
3. Maulvi Joyen Uddin Ahamed.
4. Maulvi Naim Uddin Ahamed.

Malijhikanda Debt Settlement Board.

1. Maulvi Fazlur Rahman, Member and Chairman.

Members.

2. Babu Radhika Lal Shaha.
3. Babu Bafeswar Shaha.
4. Maulvi Shafiuddin Kari.

Nayanagar Debt Settlement Board.

1. Babu Sidheswar Guha, Member and Chairman.

Members.

2. Dr. Surendra Nath Bhattacharjya.
3. Maulvi Mafizuddin Ahamed.
4. Maulvi Basiruddin Munshi.

Kalikapur Debt Settlement Board.

1. Maulvi Abdul Wahed, Member and Chairman.

Members.

2. Babu Ishan Chandra Shaha.
3. Maulvi Abul Hossain.
4. Maulvi Nazamal Haque, B.L.

Netrakona subdivision.

Barhatta Debt Settlement Board.

1. Maulvi Safaruddin Ahmad Mazumdar, Member and Chairman.

Members.

2. Babu Harendra Chandra Mazumdar.
3. Maulvi Hafizuddin Khan.
4. Maulvi Khandaker Abdul Hamid.
5. Babu Durga Charan Das.

Gohalakanda Debt Settlement Board.

1. Maulvi Hashmat Sarkar, Member and Chairman.

Members.

2. Babu Akhoy Kumar Sircar.
3. Maulvi Meherali Ahamed.
4. Maulvi Zilfat Sarkar.
5. Maulvi Umarali Munshi.

Khalisaur Debt Settlement Board.

1. Maulvi Abdul Hamid Khan, Member and Chairman.

Members.

2. Babu Pramode Chandra Sarma Sarkar.
3. Babu Kailash Chandra Chakraverty.
4. Maulvi Abdul Majid Talukdar.
5. Maulvi Faijuddin Khan.

Sandikona Debt Settlement Board.

1. Babu Dinesh Chandra Ukil, Member and Chairman.

Members.

2. Maulvi Muhammad Ismail.
2. Maulvi Obeyedulla.
4. Babu Bepin Chandra Das.
5. Munshi Golam Hussain.

Thakurakona Debt Settlement Board.

1. Babu Upendra Chandra Bhadra, Member and Chairman.

Members.

2. Babu Nanda Lal Saha.
3 Babu Hriday Ranjan Mazumdar.
4. Munshi Abdul Ali.
5. Munshi Asmat Bepari.

Mohanganj Debt Settlement Board.

1. Khan Sahib Maulvi Abdul Aziz Talukdar, Member and Chairman.

Members.

2. Babu Durgadas Mazumdar.
3 Munshi Ali Newaj Bepari.
4. Munshi Abdul Majid Khan.
5. Munshi Khoda Newaj Master.

Sadar (North) subdivision.

Iswarganj Debt Settlement Board.

1. Babu Suresh Chandra Lahiri, Member and Chairman.

Members.

2. Maulvi Muhammad Sirajuddin.
3. Babu Mahim Chandra Bhattacharjya.
4. Maulvi Nur Hossain Fakir.
5. Maulvi Abdul Hamid Mia.

Fulpur Debt Settlement Board.

1. Maulvi Ashraf Ali Khan, Member and Chairman.

Members.

2. Maulvi Abdur Rahaman Khan.
3. Maulvi Maniruddin Ahmad.
4. Babu Debendra Kishore Roy.
5. Babu Debendra Chandra Datta.

Sadar (South) subdivison.

Saltia Debt Settlement Board.

1. Babu Satadal Behari Chakladar, Member and Chairman.

Members.

2. Dr. Jonab Ali.
3. Maulvi Hafizuddin Ahmed.
4. Munshi Izzat Ali Sarkar.
5. Munshi Afsaruddin.

Bashati Debt Settlement Board.

1. Maulvi Fakir Ahmed Khan, B.L., Member and Chairman.

Members.

2. Babu Lalit Chanda Neogi.
3. Munshi Gahar Mandal.
4. Maulvi Muhammad Kazemuddin Sarkar.
5. Maulvi Muhammad Abdur Rahim.

Faridpur.—No. 10093L.R. — 14th July 1936.— In exercise of the power conferred by sub-section (2) of section 3 of the Bengal Agricultural Debtors Act, 1935 (Bengal Act VII of 1936), the Governor in Council is pleased to appoint the following persons to be Chairmen and members respectively of the undermentioned Debt Settlement Boards in the Faridpur district for a term of three years with effect from 10th August 1936 :—

Goalundo subdivision.

Khankhanapur Debt Settlement Board.

1. Babu Purna Chandra Chakravorty, Member and Chairman.

Members.

2. Babu Gopal Chandra Kundu.
3. Babu Banka Behari Kundu.
4. Maulvi Muhammad Faizuddin Sheikh.
5. Maulvi Muhammad Bahadur Sheikh.

Basantapur Debt Settlement Board.

1. Maulvi Abdul Latif Mia, Member and Chairman.

Members.

2. Babu Purna Chandra Deb Barma.
3. Babu Jnan Chandra Kar.
4. Maulvi Muhammad Aktaruddin Mia.
5. Maulvi Muhammad Azmal Ali Khan.

Daulatdia Debt Settlement Board.

1. Babu Saroda Prasad Das Gupta, Member and Chairman.

Members.

2. Babu Chinta Haran Das Gupta.
3. Dr. Rakhal Chandra Roy.
4. Maulvi Muhammad Syedali Khan.
5. Maulvi Muhammad Esem Ali Mridha.

Ratandia Debt Settlement Board.

1. Maulvi Yusuff Hossain Choudhury, Member and Chairman.

Members.

2. Babu Krishna Lal Saha.
3. Babu Khagendra Nath Sen.
4. Maulvi Muhammad Menajuddin Mondal.
5. Maulvi Muhammad Kafiluddin Mia.

Khanganj Debt Settlement Board.

1. Maulvi Sagirazzaman Choudhury, Member and Chairman.

Members.

2. Babu Charu Chandra Datta.
3. Babu Kumud Bandhu Roy.
4. Maulvi Muhammad Munsur Ali Pramanik.
5. Maulvi Muhammad Kofiluddin Mondal.

Pangsa Debt Settlement Board.

1. Maulvi Kazi Abdul Majed, Member and Chairman.

Members.

2. Babu Shyam Lal Kundu.
3. Babu Jatindra Bhusan Kundu.
4. Munshi Minjan Biswas.
5. Munshi Md. Derajtulla Sardar.

Jashai Debt Settlement Board.

1. Maulvi Khondker Naziruddin Ahmed, Member and Chairman.

Members.

2. Munshi Mofazzular Rahman.
3. Munshi Belayet Ali Biswas.
4. Babu Ananda Mohan Dutta.
5. Babu Srimanta Lal Das.

Mrigi Debt Settlement Board.

1. Maulvi Haji Md. Hedayet Ali, Member and Chairman.

Members.

2. Babu Nritya Lal Saha.
3. Munshi Abdul Majid Joardar.
4. Maulvi Wasiar Rahman.
5. Babu Deb Nath Biswas.

Mourat Debt Settlement Board.

1. Babu Aghor Nath Roy, Member and Chairman.

Members.

2. Babu Satish Chandra Roy.
3. Munshi Abdul Hamid Mia.
4. Munshi Sheikh Abdul Jabbar.
5. Munshi Abdul Jalil Biswas.

Ramdia Debt Settlement Board.

1. Moulana Hazi Afsaruddin Ahmed, Member and Chairman.

Members.

2. Babu Kishori Mohan Pal.
3. Babu Jagadish Chandra Saha.
4. Maulvi Hazi Yeasinuddin Ahmed.
5. Munshi Asiruddin Mridha.

Jamalpur Debt Settlement Board.

1. Babu Sundhangsu Kumar Banerjee, Member and Chairman.

Members.

2. Babu Satyendra Nath Mukherjee.
3. Babu Anath Bandhu Mukherjee.
4. Maulvi Md. Abdur Rasid Mia.
5. Munshi Khairat Ali Mia.

Madaripur subdivision.

Angaria Debt Settlement Board.

1. Rai Sahib Jnanendra Nath Chakravorty, Member and Chairman.

Members.

2. Babu Mono Mohan Saha Kapuria.
3. Babu Haralal Poddar.
4. Maulvi Abdul Karim Munshi.
5. Maulvi Asmat Ali Khan.

Mustafapur Debt Settlement Board.

1. Babu Birendra Chandra Sarkar, Member and Chairman.

Members.

2. Babu Bimala Chandra Majumdar.
3. Babu Madhu Sudan Banik.
4. Maulvi Munshi Nazimuddin Dhali.
5. Maulvi Munshi Abdul Kadir.

Shibchar Debt Settlement Board.

1. Maulvi Abdul Wahed Matbar, Member and Chairman.

Members.

2. Babu Rajendra Lal Kundu.
3. Babu Priya Lal Saha.
4. Haji Maijuddin Khan.
5. Maulvi Kalai Taluqdar.

Gopalganj subdivision.

Ulpur Debt Settlement Board.

1. Babu Moti Lal Roy Choudhury, Member and Chairman.

Members.

2. Babu Kula Chandra Roy Choudhury.
3. Maulvi Enus Molla.
4. Babu Purna Chandra Biswas.
5. Babu Harekrishna Biswas.

Kasiani Debt Settlement Board.

1. Babu Sita Nath Sen, Member and Chairman.

Members.

2. Babu Jatindra Nath Saha.
3. Babu Narendra Bhusan Bakshi.
4. Maulvi Munshi Aminuddin.
5. Maulvi Munshi Abdul Kader Sharip.

Bakarganj.—No. 10994L.R.—14th July 1936.—In exercise of the power conferred by sub-section (2) of section 3 of the Bengal Agricultural Debtors Act, 1935 (Bengal Act VII of 1936), the Governor in Council is pleased to appoint the following persons to be Chairmen and members respectively of the undermentioned Debt Settlement Boards in the Bakarganj district for a term of three years with effect from 10th August 1936 :—

Sadar (South) subdivision.

Raypasha-Karapur Debt Settlement Board.

1. Maulvi Hazi Ahammed Ali, Member and Chairman.

Members.

2. Babu Bankim Behari Bose.
3. Babu Akhoy Kumar Nag.
4. Maulvi Abdur Rajjak.
5. Maulvi Serajul Haque Choudhury.

Garuria Debt Settlement Board.

1. Munshi Mahamed Ismail Sikdar, Member and Chairman.

Members.

2. Babu Bhagabati Charan Roy.
3. Babu Upendra Nath Choudhury.
4. Munshi Hazi Abdul Hashem.
5. Babu Guru Charan Sil.

Keora Debt Settlement Board.

1. Maulvi Mojaffar Ahamed, Member and Chairman.

Members.

2. Babu Sibeswar Chatterji.
3. Munshi Hatemali.
4. Munshi Nazimali Sikdar.
5. Babu Nishi Kanta Majhi.

Kulkati Debt Settlement Board.

1. Babu Rajendra Lal Somaddar, Member and Chairman.

Members.

2. Babu Madhu Sudan Shaha.
3. Maulvi Ataharali Talukdar.
4. Maulvi Abdul Wahed Munshi.
5. Maulvi Elemaddi Howladar.

Galua Debt Settlement Board.

1. Munshi Naziruddin Khan, Member and Chairman.

Members.

2. Maulvi Aktaruddin.
3. Maulvi Sultanaddin.
4. Babu Priyanath Sarkar.
5. Maulvi Fazlul Karim.

Guthia Debt Settlement Board.

1. Babu Swarna Kumar Guha, Member and Chairman.

Members.

2. Babu Bisweswar Bepari.
3. Munshi Akbar Ali.

Sadar (North) subdivision.

Barjalia Debt Settlement Board.

1. Munshi Hashmat Ali Mia, Member and Chairman.

Members.

2. Babu Mano Mohon Kirtania.
3. Babu Narendra Nath Doctor.
4. Munshi Abdul Hashem Mea.
5. Maulvi Mahammed Eshaque.

Alimabad Debt Settlement Board.

1. Babu Shyama Charan Dutta, Member and Chairman.

Members.

2. Babu Hari Charan Shaha.
3. Babu Dina Bandhu De.
4. Munshi Jonab Ali.
5. Munshi Sahed Ali Talukdar.

Chandshi Debt Settlement Board.

1. Babu Ashutosh Ghosh, Member and Chairman.

Members.

2. Babu Bhuban Mohon Saha.
3. Munshi Aminaddin Howladar.

Dehergati Debt Settlement Board.

1. Babu Peari Lal Guha, Member and Chairman.

Members.

2. Babu Jadu Nath Bose.
3. Munshi Khadem Ali Khan.

Gachhua Debt Settlement Board.

1. Babu Rashik Chandra Pal, Member and Chairman.

Members.

2. Babu Gopal Chandra Das.
3. Maulvi Golam Jabbar.
4. Munshi Sadar Ali Talukdar.
5. Munshi Kalai Akon.

Bhola subdivision.

Bapta Debt Settlement Board.

1. Maulvi Abdul Mannan Howladar, Member and Chairman.

Members.

2. Maulvi Azizur Rahaman.
3. Babu Man Mohan De.
4. Maulvi Habibar Rahaman.
5. Munshi Basiruddin Talukdar.

South Dighaldi Debt Settlement Board.

1. Maulvi Kaiser Ahamed, Member and Chairman.

Members.

2. Munshi Sadarali Matbar.
3. Munshi Aptar Ali Pandit.
4. Maulvi Muhammad Abdul Waresh Kazi.
5. Babu Jogendra Chandra De.

Nyamatpur South Debt Settlement Board.

1. Maulvi Muzaffar Hossain Mia, Member and Chairman.

Members.

2. Babu Amar Chand Pal.
3. Sib Chandra Pandit.
4. Munshi Makbul Ahmed Pandit.
5. Maulvi Sultan Ahamed Mirdha.

Kutba Debt Settlement Board.

1. Munshi Majibul Haque Choudhury, Member and Chairman.

Members.

2. Babu Jagadananda Das.
3. Munshi Lutfeali Mia.
4. Munshi Abdul Kader Khan.
5. Babu Tara Prasanna Howladar.

Lalmohan Debt Settlement Board.

1. Maulvi Mohammad Hossain, Member and Chairman.

Members.

2. Babu Jatindra Lal Kunda.
3. Munshi Chand Mia Sadagar.
4. Munshi Majibar Rahaman.
5. Munshi Azizur Rahaman.

Pirojpur subdivision.

Samudaykati Debt Settlement Board.

1. Babu Jatindra Nath Aich, Member and Chairman.

Members.

2. Babu Rohini Kumar Somaddar.
3. Maulvi Karam Ali Khan.
4. Babu Basanta Kumar Mistry.
5. Munshi Daliluddin Talukdar.

Chirapara-Parsaturia Debt Settlement Board.

1. Maulvi Momtazuddin Jomaddar, Member and Chairman.

Members.

2. Maulvi Abdul Aziz Talukdar.
3. Maulvi Hatem Ali Sardar.
4. Babu Annada Charan Das Gupta.
5. Munshi Gagan Ali Sheikh.

Bhandaria Debt Settlement Board.

1. Maulvi Abdul Majid Jomader, Member and Chairman.

Members.

2. Babu Rohini Nandan Pal.
3. Babu Balaram Bhowmic.
4. Maulvi Farman Kazi.
5. Maulvi Khabiruddin Ahmed.

Matbaria Debt Settlement Board.

1. Khan Sahib Hatem Ali Jomaddar, Member and Chairman.

Members.

2. Babu Rash Mohan Kunda.
3. Maulvi Mir Majed Ali, B.COM.
4. Maulvi After Ali Majhi.
5. Babu Aswini Kumar Bala.

Patuakhali subdivision.

Kalikapur Debt Settlement Board.

1. Maulvi Mahammad Ali Khondker, Member and Chairman.

Members.

2. Babu Sarat Chandra Pal.
3. Maulvi Hassona Ali Howlader.
4. Maulvi Sekendar Ali Mridha.
5. Maulvi Azizur Rahman Munshi

Baufal Debt Settlement Board.

1. Maulvi Rahimuddin Talukder, Member and Chairman.

Members.

2. Babu Sarat Chandra Shaha.
3. Babu Digendra Nath Shaha
4. Maulvi Abdul Jabbar, B.A.
5. Babu Nagendra Nath Pal.

Galachipa Debt Settlement Board.

1. Babu Akshoy Kumar Sarker, Member and Chairman.

Members.

2. Babu Satish Ch. Pal.
3. Maulvi Rajjab Ali Mia.
4. Maulvi Abdul Sattar.
5. Maulvi Abdul Jabbar.

Betagi Debt Settlement Board.

1. Babu Atindra Lal Roy, Member and Chairman.

Members.

2. Munshi Abdur Rahman Khalifa.
3. Munshi Hosonuddin Sikder.
4. Babu Sarat Chandra Nandi.
5. Munshi Rajjab Ali Khan.

Barguna Debt Settlement Board.

1. Maulvi Romjan Ali Mia, Member and Chairman.

Members.

2. Babu Dakshina Ranjan Ghose.
3. Babu Mohini Mohon Das.
4. Munshi Gagan Howlader.
5. Munshi Kokai Molla.

Subedkhali-Douli Debt Settlement Board.

1. Maulvi Azaharuddin Khan, Member and Chairman.

Members.

2. Munshi Madhu Khan.
3. Munshi Hoson Howlader.
4. Babu Basanta Kumar Chakrabarty.
5. Munshi Akub Ali.

Amtali Debt Settlement Board.

1. Munshi Arshed Ali Talukder, Member and Chairman.

Members.

2. Babu Bisveswar De.
3. Munshi Afeluddi Mridha.
4. Maulvi Tomijuddin Howlader.
5. Maulvi Mahabbat Ali.

Rajshahi.—No. 10095L.R.—14th July 1936.—In exercise of the power conferred by sub-section (2) of section 3 of the Bengal Agricultural Debtors Act, 1935 (Bengal Act VII of 1936), the Governor in Council is pleased to appoint the following persons to be Chairmen and members respectively of the undermentioned Debt Settlement Boards in the Rajshahi district for a term of three years with effect from 10th August 1936 :—

Sadar subdivision.

Godagari Debt Settlement Board.

1. Babu Durga Ram Bhakat, Member and Chairman.

Members.

2. Babu Pannalal Thakur.
3. Babu Dhiman Chandra Roy.
4. Maulvi Muhammad Isobali Sarkar.
5. Babu Adyanath Majumdar.

Matikata Debt Settlement Board.

1. Maulvi Palanuddin Sarkar, Member and Chairman.

Members.

2. Maulvi Muhammad Easin Mondal.
3. Babu Hariprasad Misra.
4. Babu Dubailal Sarkar.
5. Maulvi Ahmad Ali Mondal.

Talanda Debt Settlement Board.

1. Babu Bidhu Bhusan Maitra, Member and Chairman.

Members.

2. Babu Nabadwip Chandra Sarkar.
3. Babu Mohendra Nath Sarkar.
4. Munshi Ebadulla Sarkar.
5. Babu Ardhendu Sekhar Maitra.

Brikutsa Debt Settlement Board.

1. Babu Bireswar Banerjee, Member and Chairman.

Members.

2. Babu Lalit Chandra Pramanik.
3. Babu Rajani Kanto Mondal
4. Maulvi Ganjabali Khan.
5. Munshi Ghugra Mandal

Keogachi Debt Settlement Board.

1. Dr. Syed Mohammad Shafi, Member and Chairman.

Members.

2. Munshi Moyenuddin.
3. Babu Indu Bhusan Das.
4. Munshi Kefatulla Mondal.
5. Babu Anath Bandhu Mondal.

Dighalkandi Debt Settlement Board.

1. Maulvi Sheikh Abedali, Member and Chairman.

Members.

2. Babu Amulya Kumar Munshi.
3. Babu Bejoy Krishna Chakravorty.
4. Munshi Ebratullah Mondal.
5. Babu Hari Mohan Saha.

Charghat Debt Settlement Board.

1. Munshi Md. Yakub, Member and Chairman.

Members.

2. Babu Narendra Kumar Sen Gupta.
3. Maulvi Kaftan Haji.
4. Babu Batakrishna Deb Nath.
5. Munshi Khetabuddin Sarkar.

Raipara Debt Settlement Board.

1. Maulvi Abdul Khaleque, Member and Chairman.

Members.

2. Munshi Taseruddin Sardar.
3. Munshi Mangaluddin Mondal.
4. Munshi Kafiluddin Molla.
5. Babu Chandra Nath Sarkar.

Dinajpur. — No. 10096L.R.—14th July 1936.—In exercise of the power conferred by sub-section (2) of section 3 of the Bengal Agricultural Debtors Act, 1935 (Bengal Act VII of 1936), the Governor in Council is pleased to appoint the following persons to be Chairmen and members respectively of the undermentioned Debt Settlement Boards in the Dinajpur district for a term of three years with effect from 10th August 1936 :—

Sadar subdivision.

Nasrathpur Debt Settlement Board.

1. Maulvi Nasiruddin Sarker, Member and Chairman.

Members.

2. Babu Ganapati Nathani.
3. Maulvi Namiruddin Sarker.
4. Maulvi Jamiruddin Ahamed.
5. Babu Adwaita Charan Saha.

Satnala Debt Settlement Board

1. Dr. Abdus Sobhan, Member and Chairman.

Members.

2. Maulvi Kodaidil Shah.
3. Maulvi Rajab Ali Shah.
4. Babu Satish Chandra Roy
5. Babu Karuna K. Barma.

Fatehjangpur Debt Settlement Board.

1. Maulvi Harmuj Ali Shah Fakir, Member and Chairman.

Members.

2. Maulvi Abdul Goffur Shah.
3. Maulvi Badaruddin Ahamed.
4. Haji Hafizuddin.
5. Babu Kshirode Nath Barman.

Bahin Debt Settlement Board.

1 Babu Harendra Narayan Roy Choudhury, Member and Chairman.

Members.

2 Munshi Ishaque Ali Sarker.
3. Maulvi Keramat Ali Sarker.
4. Munshi Alimuddin Sarker.
5. Maulvi Haji Mian Hosain.

Binodenagar Debt Settlement Board

1. Maulvi Hajiruddin Choudhury, Member and Chairman.

Members.

2. Maulvi Fajiruddin Shah.
3 Babu Sarada Prosad Shaha
4. Babu Harendra Ch Sarker
5. Munshi Somser Ali.

Daudpur Debt Settlement Board.

1. Babu Harimohan Bhattacherjee, Member and Chairman.

Members

2 Babu Ghera Lal Noalaksha
3. Babu Kshitish Ch. Sen Gupta
4. Maulvi Fazleuddin Ahamed.
5. Maulvi Kazi Abdul Monsur Ahamed.

Thakurgaon subdivision

Bochaganj Debt Settlement Board.

1. Maulvi Sharifuddin Ahamed, Member and Chairman.

Members.

2. Babu Gangaram Agarwala.
3 Babu Khub Chand Sarwagi
4. Maulvi Khorsed Ali Choudhury.
5. Babu Jyotish Chandra Roy.

Bhomradah Debt Settlement Board.

1. Babu Haribal Bhowmik, B.Sc., Member and Chairman.

Members

2. Babu Haradyal Dutta.
3 Maulvi Afizuddin Sarker.
4. Babu Hemanta Kumar Ghosh.
5 Babu Dhandeb Roy

Birganj Debt Settlement Board.

1. Maulvi Kaisaruddin Ahamed, Member and Chairman.

Members.

2. Babu Badri Lal Shomani.
3. Maulvi Tafiruddin Ahmed.
4. Maulvi Tafiruddin Ahamed Choudhury.
5. Babu Ramesh Chandra Choudhury.

Hariharpur Debt Settlement Board.

1. Babu Nil Ratan Khan Choudhury, Member and Chairman.

Members

2. Babu Manmatha Nath Das.
3. Babu Girija Nath Das
4. Maulvi Fazar Ali Ahamed.
5. Babu Surendra Ch. Choudhury.

Haripur Debt Settlement Board.

1. Babu Nagendra Behari Roy Choudhury, Member and Chairman.

Members.

2. Babu Surendra Nath Bhowmik.
3. Maulvi Pir Muhammed Sarker.
4. Maulvi Rajab Ali Sarker
5. Bhote Ram Singh.

Balurghat subdivision

Boaldar Debt Settlement Board.

1. Babu Braja Behari Roy Choudhury. Member and Chairman.

Members.

2 Babu Binode Behari Choudhury.
3 Babu Raichand Sarker.
4. Babu Guru Charan Roy.
5. Babu Kishori Mohan Mohanta.

Deor Debt Settlement Board.

1. Babu Gangesh Ch. Chatterjee. Member and Chairman.

Members.

2. Munshi Manik Muhammed Shah
3. Munshi Bhajan Moudal.
4. Munshi Najibuddin Sarker.
5. Babu Mrigendra Nath Barma

Birampur Debt Settlement Board.

1. Rai Sahib Jagadishwar Saha, Member and Chairman.

Members.

2. Babu Hansraj Bothra.
3. Babu Satish Chandra Saha.
4. Munshi Muhammed Nasaratulla Mondal.
5. Munshi Kirajuddin Sarker.

Najipur Debt Settlement Board.

1. Babu Sachindra Nath Kundu, Member and Chairman.

Members.

2. Babu Umesh Chandra Das.
3. Babu Ruhini Kanta Mandal.
4. Munshi Micha Muhammed Mandal.
5. Babu Ram Lal Sarker.

Patnitola Debt Settlement Board.

1. Babu Mohit Nath Choudhury, Member and Chairman.

Members.

2. Babu Benimadhab Roy.
3. Babu Jagneswar Das.
4. Munshi Baha Mandal.
5. Maulvi Patan Mandal.

Sapahar Debt Settlement Board.

1. Shah Waziuddin Ahamed Choudhury, Member and Chairman.

Members.

2. Babu Mathura Prosad Bhakat.
3. Babu Fagooram Kalwar.
4. Maulvi Nur Muhammed Shah Choudhury.
5. Maulvi Idrish Mandal.

Umar Debt Settlement Board.

1. Maulvi Mafizuddin Choudhury, Member and Chairman.

Members.

2. Babu Jaharmal Agarwala.
3. Maulvi Salimuddin Mandal.
4. Maulvi Rafiquiuddin Mandal.
5. Babu Rai Charan Ghose.

Jalpaiguri.—No. 10097L.R.—14th July 1936.—In exercise of the power conferred by sub-section (2) of section 3 of the Bengal Agricultural Debtors Act, 1935 (Bengal Act VII of 1936), the Governor in Council is pleased to appoint the following persons to be Chairmen and members respectively of the undermentioned Debt Settlement Boards in the Jalpaiguri district for a term of three years with effect from 10th August 1936 :—

Sadar subdivision.

Tetulia Debt Settlement Board.

1. Babu Nilmoni Das, Member and Chairman.

Members.

2. Babu Mangulal Mansingka.
3. Babu Tengner Saha.
4. Babu Baidyanath Das.
5. Babu Prahlad Chandra Shastri.

Sannyasikata Debt Settlement Board.

1. Maulvi Raisuddin Ahmed, Member and Chairman.

Members.

2. Munshi Sabrat Ali.
3. Maulvi Alimuddin Muhammad.
4. Maulvi Mohamed Idris.
5. Babu Nabakumar Singha.

Shikarpur Debt Settlement Board.

1. Babu Mohendra Lal Bose, Member and Chairman.

Members.

2. Babu Baijnath Agarwalla.
3. Babu Pasta Mohan Das.
4. Maulvi Hiasuddin Ahmed.
5. Maulvi Muhammad Taser.

Pochagarh Debt Settlement Board.

1. Maulvi Muhammad Nasiruddin, Member and Chairman.

Members.

2. Babu Hem Narayan Roy.
3. Babu Jogendra Nath Misra.
4. Maulvi Naji Mohammed.

Boda Debt Settlement Board.

1. Babu Lalit Mohan Guha, Member and Chairman.

Members.

2. Munshi Lutfar Rahman.
3. Babu Debnath Saha.
4. Maulvi Abdul Awal.

Debiganj Debt Settlement Board.

1. Babu Benoy Bhusan Das Gupta, Member and Chairman.

Members.

2. Babu Pagarmal Agarwalah.
3. Maulvi Tasaddaque Hossain.
4. Maulvi Tarabuddin.

Maingaguri Debt Settlement Board.

1. Babu Romesh Chandra Sanyal, Sub-Registrar, Member and Chairman.

Members.

2. Babu Rakhal Raj Banerjee.
3. Babu Chimney Ram Mohesri.
4. Babu Priya Nath Roy Choudhury.
5. Babu Mohikanta Das.

Dharampur Debt Settlement Board.

1. Babu Guru Charan Deb, Member and Chairman.

Members.

2. Babu Mohendra Nath Das.
3. Maulvi Esahaque Ali Shah Prodhan.
4. Maulvi Tajammal Hossain.

Patgram Debt Settlement Board.

1. Babu Priya Nath Goswami, Member and Chairman.

Members.

2. Babu Narendra Nath Dakua.
3. Maulvi Jamiruddin.
4. Maulvi Hazaruddin Mia.
5. Babu Sachindra Nath Das Gupta.

Alipur Duar subdivision.

Silbarihat Debt Settlement Board.

1. Babu Gnan Chandra Roy, Member and Chairman.

Members.

2. Babu Rajendra Nath Ghose.
3. Babu Hriday Nath Paul.
4. Babu Narendra Nath Barman.

Samuktola Debt Settlement Board.

1. Rev. T. Lenman, Member and Chairman.

Members.

2. Babu Harendra Narayan Das.
3. Babu Ganga Sahai.
4. Bija Bargi.
5. Nathan Kisku.

Falakata Debt Settlement Board.

1. Maulvi Abdus Sobhan, Member and Chairman.

Members.

2. Babu Srish Chandra Bose.
3. Munshi Khalilur Rahman.
4. Babu Tarini Charan Roy Patwari.

Khairbari Debt Settlement Board.

1. Babu Apurba Krishna Bose, Member and Chairman.

Members.

2. Babu Bhajuram Agarwallah.
3. Kazi Abdul Gani Ahmed.
4. Munshi Azimuddin Muhammad.
5. Babu Balichand Karji.

Kumargram Debt Settlement Board.

1. Babu Lalit Mohan Poddar, Member and Chairman.

Members.

2. Babu Jatindra Deb Kuar.
3. Babu Madan Sing Barua.
4. Babu Akshoy Kumar Ganguly.

Barobisha Debt Settlement Board.

1. Babu Dayanath Barman, Member and Chairman.

Members.

2. Babu Bhadra Nath Das.
3. Babu Nripendra Nath Das.
4. Babu Bhognarayan Das.

Rangpur. — No. 10098L.R.—14th July 1936.—In exercise of the power conferred by sub-section (2) of section 3 of the Bengal Agricultural Debtors Act, 1935 (Bengal Act VII of 1936), the Governor in Council is pleased to appoint the following persons to be Chairman and members respectively of the undermentioned Debt Settlement Boards in the Rangpur district for a term of three years with effect from 10th August 1936:—

Sadar subdivision.

Uttam Debt Settlement Board.

1. Babu Tarapada Pandit, Member and Chairman.

Members.

2. Babu Bhaba Sankar Choudhury.
3. Munshi Ahammad Ali.
4. Munshi Majitulla Sarkar.
5. Munshi Afanuddin Shaikh.

Mirzapur Debt Settlement Board.

1. Babu Atul Chandra Datta Choudhury, Member and Chairman.

Members.

2. Babu Jogesh Bandhu Datta.
3. Munshi Muhammad Basiruddin.
4. Munshi Syed Muhammad Secundar Ali.

Gaibandha subdivision.

Komarnai Debt Settlement Board.

1. Khan Bahadur Maulvi Abdul Majid, Member and Chairman.

Members.

2. Dr. Nibaran Chandra Kar.
3. Babu Radhabinode Choudhury.

Chandipur Debt Settlement Board.

1. Maulvi S. M. Giasuddin, Member and Chairman.

Members.

2. Babu Krishna Kamal Sen.
3. Munshi Nazimuddin Pramanik.
4. Munshi Fazaluddin Sarkar.

Palashbari Debt Settlement Board.

1. Maulvi Mokhleswar Rahaman Choudhury, Member and Chairman.

Members.

2. Munshi Azizar Rahman.
3. Maulvi Tahsinuddin Choudhury.

Kurigram subdivision.

Ramna Debt Settlement Board.

1. Dr. Azaharuddin Ahmed, Member and Chairman.

Members.

2. Babu Priyanath Barman Pramanik.
3. Munshi Abdul Khaleque.
4. Maulvi Abdul Latif.

Kulaghat Debt Settlement Board.

1. Babu Suresh Chandra Sarkar, Member and Chairman.

Members.

2. Munshi Moniruddin Sarkar.
3. Babu Annada Kumar Das.
4. Munshi Jenatulla Ahmed.

Nilphamari subdivision.

Saidpur Debt Settlement Board.

1. Babu Sreenath Ghosh, Member and Chairman.

Members.

2. Babu Karuna Chandra De.
3. Munshi Soleman Ahmed.
4. Babu Nagendra Nath Samanta.
5. Munshi Akbar Hossain.

Boragari Debt Settlement Board.

1. Maulvi Hesamuddin Ahmed, Member and Chairman.

Members.

2. Munshi Sukuruddin Sarkar.
3. Babu Balahari Barman.
4. Babu Bistu Narayan Barman.

Bogra.—No. 10099L.R. — 14th July 1936.—In exercise of the power conferred by sub-section (2) of section 3 of the Bengal Agricultural Debtors Act, 1935 (Bengal Act VII of 1936), the Governor in Council is pleased to appoint the following persons to be Chairman and members respectively of the undermentioned Debt Settlement Boards in the Bogra district for a term of three years, with effect from 10th August 1936 :—

Sadar subdivision.

Balighata Debt Settlement Board.

1. Babu Atul Chandra Roy, Member and Chairman.

Members.

2 Babu Bijoy Krishna Sarkar, B.A.
3. Munshi Kalimuddin Sarkar.
4. Munshi Basiruddin Sarkar.
5. Munshi Sharifuddin Chaudhuri.

Jaipurhat Debt Settlement Board.

1. Rai Sahib Purna Chandra Chakravarty, Member and Chairman.

Members.

2. Babu Ganga Hari Sarkar.
3. Munshi Mahabatulla Mondal.
4. Maulvi Abdur Razak Chaudhuri.
5. Maulvi Zillar Rahman.

Rukindipur Debt Settlement Board.

1. Khan Saheb Jasiruddin Ahmed, Member and Chairman.

Members.

2. Babu Hrishikesh Sarkar.
3. Babu Akshoy Kumar Sarkar.
4. Munshi Sayebuddin Sardar.
5. Munshi Abdul Rahim Sadagor.

Santahar Debt Settlement Board.

1. Mr. D. B. Moddie, Member and Chairman.

Members.

2. Maulvi Mayezuddin Ahmed.
3. Babu Surendra Nath Dass.
4. Munshi Basiruddin Khan.
5. Haji Sayebuddin.

Dupchanchia Debt Settlement Board.

1. Babu Kshirode Nath Chaudhuri, Member and Chairman.

Members.

2. Babu Suresh Chandra Kundu.
3. Haji Nader Ali Taluqdar.
4. Munshi Pabanuddin.
5. Munshi Basratulla Tarafdar.

Chandanbaisha Kamalpur Debt Settlement Board.

1. Babu Bimalananda Sen, Member and Chairman.

Members.

2. Babu Sidheswar Chatterji.
3. Maulvi Dewan Mohiuddin.
4. Maulvi Georgis Hossain.
5. Maulvi Sakhaot Ulla.

Joregachha Debt Settlement Board.

1. Maulvi Salequddin Ahmed, Member and Chairman.

Members.

2. Maulvi Shah Ahsanulla.
3. Babu Surendra Nath Ghosh.
4. Babu Nanda Lal Bhaumik.
5. Munshi Saimuddin Mondal.

Sonatola Debt Settlement Board.

1. Muhammad Naziruddin Mondal, Member and Chairman.

Members.

2. Babu Mahendra Chandra Giri Goswami.
3. Munshi Daulatulla Mandal.
4. Munshi Naziruddin Sarkar.
5. Munshi Maniruddin Mandal.

Shimabari Debt Settlement Board.

1. Maulvi Maula Bux Sarkar, Member and Chairman.

Members.

2. Babu Jaladhar Roy Chaudhuri.
3. Babu Upendra Nath Sarkar.
4. Munshi Abbas Ali Mandal.
5. Munshi Rahimuddin Sarkar.

Fapore Debt Settlement Board.

1. Munshi Rahimuddin, Member and Chairman.

Members.

2. Babu Satish Chandra Pal.
3. Munshi Mia Jan Mandal.
4. Babu Nil Chandra Sarkar.
5. Munshi Masiruddin Khondkar.

Shabgram Debt Settlement Board.

1. Babu Braja Nath Das, Member and Chairman.

Members.

2. Babu Rasharaj Das.
3. Munshi Idrisali Mandal.
4. Munshi Ebrahim Sarkar.
5. Munshi Obaidulla Sarkar.

Chupinagar Debt Settlement Board.

1. Munshi Kazemuddin Mondal, Member and Chairman.

Members.

2. Munshi Amiruddin Fakir.
3. Munshi Mobarak Ali Mandal.
4. Munshi Jasmatulla Akanda.
5. Munshi Abdul Gafur Mia.

Mokamtola Debt Settlement Board.

1. Maulvi Muhammad Asadulla, Member and Chairman.

Members.

2. Babu Hem Chandra Mustafi.
3. Babu Sarada Prosad Sarkar.
4. Munshi Mafizuddin Ahmed.
5. Munshi Mahiuddin.

Baliadighi Debt Settlement Board.

1. Munshi Kasiruddin Ahmed, Member and Chairman.

Members.

2. Munshi Tamizuddin Mandal.
3. Munshi Kazemuddin Mondal.
4. Babu Jatindra Nath Sarkar.
5. Babu Chandra Mohan Das.

Kahaloo Debt Settlement Board.

1. Munshi Tasaratulla Kabiraj, Member and Chairman.

Members.

2. Babu Kumud Ranjan Majumdar.
3. Munshi Malequddin.
4. Munshi Sahebulla Mandal.
5. Munshi Nafizali Akanda.

Pabna.—No. 10100L.R. — 14th July 1936.— In exercise of the power conferred by sub-section (2) of section 3 of the Bengal Agricultural Debtors Act, 1935 (Bengal Act VII of 1936), the Governor in Council is pleased to appoint the following persons to be Chairmen and members respectively of the undermentioned Debt Settlement Boards in the Pabna district for a term of three years, with effect from 10th August 1936 :—

Sadar subdivision.

Malanchi Debt Settlement Board.

1. Babu Jatindra Nath Sarkar, Member and Chairman.

Members.

2. Maulvi Olimuddin Ahmed.
3. Haji Hossen Ali Sarkar.
4. Babu Anath Bandhu Saha.
5. Babu Hari Charan Chakravarty.

Dapunia Debt Settlement Board.

1. Babu Prasanna Nath Chobey, Member and Chairman.

Members.

2. Maulvi Auquatulla.
3. Maulvi Kanchanuddin Biswas.
4. Babu Tarapada Sarkar.
5. Maulvi Serajul Haque.

Chatmohar Debt Settlement Board.

1. Babu Gopeswar Kundu, Member and Chairman.

Members.

2. Maulvi Asgaruddin Khatib.
3. Maulvi Aowal Ali Sarkar.
4. Babu Kaushiki Nath Kundu.
5. Babu Dhirendra Nath Sarkar.

Iswardi Debt Settlement Board.

1. Maulvi Punjabali Khan, Member and Chairman.

Members.

2. Maulvi Joynal Abedin.
3. Maulvi Khondkar Sayed Golam Sadeque.
4. Dr. Mahendra Nath Das.
5. Babu Gajanan Agarwala.

Bera Debt Settlement Board.

1. Maulvi Muhammad Naimuddin, Member and Chairman.

Members.

2. Maulvi Naimuddin Ahmed.
3. Maulvi Ramjan Ali Fakir.
4. Babu Pramatha Nath Bagchi.
5. Babu Gopal Chandra Pramanik.

Jatsakhini Debt Settlement Board.

1. Babu Jogesh Chandra Chowdhury, Member and Chairman.

Members.

2. Maulvi Abdul Aziz.
3. Maulvi Yasinuddin Ahmed.
4. Babu Profulla Kumar Das.
5. Babu Govinda Prosad Chaudhuri.

Serajganj subdivision.

Shahazadpur Debt Settlement Board.

1. Maulvi Aziz Meser, Member and Chairman.

Members.

2. Maulvi Kalimuddin Sarkar.
3. Maulvi Babar Ali Sarkar.
4. Babu Jogesh Chandra Sinha.
5. Babu Jogendra Narayan Dewan.

Ullapara Debt Settlement Board.

1. Babu Satyendra Narayan Chakravarty, Member and Chairman.

Members.

2. Maulvi Sabdul Pramanik.
3. Maulvi Manulla Sarkar.
4. Babu Hari Charan Modak.
5. Babu Broja Govinda Guha.

Serajganj Municipality Debt-Settlement Board.

1. Babu Suresh Chandra Das Gupta, Member and Chairman.

Members.

2. Maulvi Kazimuddin.
3. Maulvi Muhammad Ali.
4. Babu Aswini Kumar Guha.
5. Maulvi Md. Ramjan Sarkar.

Malda. — No. 10101L.R.—14th July 1936.—In exercise of the power conferred by sub-section (2) of section 3 of the Bengal Agricultural Debtors Act, 1935 (Bengal Act VII of 1936), the Governor in Council is pleased to appoint the following persons to be Chairmen and members respectively of the undermentioned Debt Settlement Boards in the Malda district for a term of three years, with effect from 10th August 1936 :—

Sadar subdivision.

Milki Debt Settlement Board.

1. Maulvi Helaluddin Ahmed, Member and Chairman.

Members.

2. Maulvi Ramjanali Khan.
3. Babu Raman Chandra Singh.
4. Babu Abhay Charan Jha.

Jodupur Debt Settlement Board.

1. Babu Rakhal Chandra Ray, B.L., Member and Chairman.

Members.

2. Babu Hrishikesh Ray Choudhuri.
3. Munshi Abdur Rahman Biswas.
4. Munshi Rahman Satiar.

Bholahat Debt Settlement Board.

1. Babu Khirode Gopal Saha, Member and Chairman.

Members.

2. Babu Rajendranath Das.
3. Munshi Gouhar Ali Biswas.
4. Munshi Wahedali Molla.

Sujapur Debt Settlement Board.

1. Munshi Farman Ali, Member and Chairman.

Members.

2. Babu Harasundar Gupta.
3. Dr. Abdul Quader, L.M.F.
4. Munshi Khabiruddin Ahmed.

Golapganj Debt Settlement Board.

1. Munshi Momajedali Mia, Member and Chairman.

Members.

2. Babu Mrityunjay Sarkar.
3. Babu Anantalal Pande.
4. Maulvi Muhammad Waresh Ali.

Barai Debt Settlement Board.

1. Babu Surendra Nath Mandal, Member and Chairman.

Members.

2. Babu Brajendra Nath Mandal.
3. Munshi Nejabat Hossain.
4. Munshi Keramat Ali Sarkar.
5. Munshi Omer Ali Sarkar.

Bhingole Debt Settlement Board.

1. Munshi Nasiruddin Ahmed, Member and Chairman.

Members.

2. Babu Nadia Chand Saha.
3. Munshi Nezabat Mandal.
4. Babu Khagendra Nath Das.
5. Munshi Mafijuddin Ahmed.

Sadlichak Debt Settlement Board.

1. Munshi Moslehuddin Ahmed, Member and Chairman.

Members.

2. Babu Bhagawan Chandra Saha.
3. Babu Jahuri Null Marwari.
4. Munshi Dost Mahammad Mandal.
5. Munshi Kabiruddin Biswas.

Malior Debt Settlement Board.

1. Munshi Aminuddin Ahmed, Member and Chairman.

Members.

2. Babu Ramnath Mandal.
3. Babu Ram Tarak Saha.
4. Munshi Abdul Aziz Biswas.
5. Maulvi Mahammad Hossain.

Araidanga Debt Settlement Board.

1. Maulvi Muhammad Ibrahim, Member and Chairman.

Members.

2. Babu Khitish Chandra Misra.
3. Babu Rajendra Narayan Choudhury.
4. Munshi Bagir Ali.
5. Babu Umesh Chandra Das.

Pukhuria Debt Settlement Board.

1. Munshi Basarat Biswas, Member and Chairman.

Members.

2. Babu Dhirendra Nath Ray.
3. Babu Gosto Behari Das.
4. Mir Dhannu.
5. Munshi Saikh Muhammad Eusuff.

Chandmoni Debt Settlement Board.

1. Munshi Abdul Hakim, Member and Chairman.

Members.

2. Babu Jogendra Nath Ray.
3. Babu Kalpanath Mandal.
4. Munshi Rafatulla Dewan
5. Munshi Sekundar Ali.

Malatipur Debt Settlement Board.

1. Babu Ramesh Chandra Das, Member and Chairman.

Members.

2. Babu Umesh Chandra Das.
3. Babu Girish Chandra Das.
4. Munshi Moula Baksh Biswas
5. Munshi Reazuddin Biswas.

Kharba Debt Settlement Board

1. Munshi Haji Khadem Ali, Member and Chairman.

Members.

2. Babu Nitya Gopal Sarkar.
3. Babu Bhagawan Chandra Saha.
4. Munshi Chand Muhammad.
5. Haji Barat Ali.

Gobratala Debt Settlement Board.

1. Babu Kalikananda Mukhopadhya, B.L., Member and Chairman.

Members.

2. Maulvi Moslehuddin Mia.
3. Babu Abanikanta Bhattacharjya
4. Babu Rohini Kanta Kundu.

Maharajpur Debt Settlement Board.

1. Maulvi Md. Eshahaque, B.L., Member and Chairman.

Members.

2. Babu Jogindranath De.
3. Maulvi Muhammad Ayub Mandal.
4. Maulvi Syed Ahammad.

Namosankarbati Debt Settlement Board

1. Maulvi Mirza Muhammad Kayom, B.L., Member and Chairman.

Members.

2. Munshi Tabarak Ali.
3. Maulvi Ahammad Ali Biswas.
4. Maulvi Muhammad Ismail.

Khamar Debt Settlement Board.

1. Maulvi Waezuddin Ahmed, B.L., Member and Chairman.

Members

2. Maulvi Abdul Gafur.
3. Babu Suresh Chandra Saha.
4. Munshi Haji Emarat Ulla.

Ramchandrapur Debt Settlement Board.

1. Kaviraj Khosruddin Ahmed, Member and Chairman.

Members

2. Munshi Ghiasuddin Mandal.
3. Babu Kedarnath Saha
4. Babu Mohini Mohan Saha.

Monakasa Debt Settlement Board

1. Maulvi Tahur Ahmed Choudhuri, B.L., Member and Chairman.

Members.

2. Dr. Khusruddin Ahmed.
3. Maulvi Muhammad Abbas Ali.
4. Babu Makhan Chandra Pramanik.

Kansat Debt Settlement Board.

1. Babu Hem Chandra Acharjya, Member and Chairman.

Members.

2. Maulvi Serajuddin Biswas.
3. Babu Janaki Nath Kundu.
4. Maulvi Amzad Hossain Mia.

Rahanpur Debt Settlement Board.

1. Babu Jogendra Nath Saha, B.L., Member and Chairman.

Members.

2. Rai Sahib Bishnu Charan Banerjee.
3. Babu Sailaja Kumar De.
4. Maulvi Maniruddin Mandal.

Habibpur Debt Settlement Board.

1. Rev. Father Thomas Cattaneo, Member and Chairman.

Members.

2. Babu Jadav Chandra Sarkar.
3. Munshi Mahammad Hossain Sarkar.
4. Babu Dasarath Barma.
5. Gopal Santhal.

Gazole Debt Settlement Board.

1. Munshi Shaikh Bafatulla, Member and Chairman.

Members.

2. Babu Ramani Mohan Choudhuri
3. Babu Nagendra Nath Sarkar.
4. Munshi Rahim Bux.
5. Barnabas Sarkar.

Bamangola Debt Settlement Board.

1. Babu Jangli Kanta Ray Choudhuri, Member and Chairman.

Members.

2. Munshi Sakhawat Hossain.
3. Babu Narendra Nath Mandal.
4. Tunu Pargana.
5. The Mahomedan Marriage Registrar of Bamangola.

Malda Debt Settlement Board.

1. The Headmaster, Old Malda M. E. School, Member and Chairman.

Members.

2. Babu Charugopal Seth.
3. Munshi Muhammad Kasimuddin.
4. Gulu Pargana.
5. Babu Bibhuti Bhusan Banerjee.

Nachole Debt Settlement Board.

1. Babu Bishen Prashad, Member and Chairman.

Members.

2. Babu Lalit Ram Bhakat.
3. Munshi Bogdad Mandal.
4. Karan Pargana.
5. Babu Dharanidhar Sarkar.

Parbatipur Debt Settlement Board.

1. Rev. Father Fabrine, Member and Chairman.

Members.

2. Babu Srish Chandra Bose.
3. Munshi Abdul Karim Choudhuri.
4. Grisoston Pargana.
5. Gangu Pargana.

Tippera.—No. 10102L.R.—14th July 1936.—In exercise of the power conferred by sub-section (*2*) of section 3 of the Bengal Agricultural Debtors Act, 1935 (Bengal Act VII of 1936), the Governor in Council is pleased to appoint the following persons to be Chairmen and members respectively of the undermentioned Debt Settlement Boards in the Tippera district for a term of three years, with effect from 10th August 1936 :—

Chandpur subdivision.

Sachar Debt Settlement Board.

1. Babu Suresh Chandra Sen Chaudhuri, Member and Chairman.

Members.

2. Maulvi Rehanuddin Bhuiya.
3. Munshi Najamuddin Sarkar.
4. Munshi Rahamaddin Haji.

Palákhal Debt Settlement Board.

1. Babu Joy Kumar Majumdar, Member and Chairman.

Members.

2. Babu Kailash Chandra Chakraborty.
3. Munshi Ahmedulla.
4. Munshi Samiruddin Hazi.
5. Munshi Dud Mia Pradhania.

Kachua Debt Settlement Board.

1. Maulvi Ahmedulla Kari, Member and Chairman.

Members.

2. Babu Surjya Kumar Datta.
3. Maulvi Md. Ekamat Ali.
4. Babu Nishi Kanta Nath Bepari.

Kadla Debt Settlement Board.

1. Maulvi Majiruddin Ahmed Chaudhuri, Member and Chairman.

Members.

2. Haji Amjad Ali Majumdar.
3. Babu Ananda Chandra Poddar.
4. Maulvi Md. Yasin.

Karaiya Debt Settlement Board.

1. Maulvi Golam Kadir Patwari, Member and Chairman.

Members.

2. Babu Sashi Kumar Poddar.
3. Babu Baikuntha Bhaumik.
4. Maulvi Alauddin Munshi.

Gohat Debt Settlement Board.

1. Maulvi Hamid Mia Patwari, Member and Chairman.

Members.

2. Maulvi Kalimuddin Mia.
3. Babu Sarat Chandra Das.
4. Maulvi Rahimuddin Patwari.

Asrabpur Debt Settlement Board.

1. Maulvi Mamtajuddin Ahmed Chaudhuri, Member and Chairman.

Members.

2. Maulvi Abdur Rahaman Majumder.
3. Babu Krishna Sundar Sarma.
4. Maulvi Yusuf Ali Talukdar.

Baluthupa Debt Settlement Board.

1. Maulvi Iman Ali Patwari, Member and Chairman.

Members.

2. Babu Benode Behari Saha Roy.
3. Maulvi Ayub Ali Chaudhuri.
4. Maulvi Hamid Ali Miji

Subidpur Debt Settlement Board

1. Munshi Munsar Ahmed Pandit, Member and Chairman.

Members

2. Babu Madhu Sudhan Majumdar.
3. Munshi Mahammad Hossain Sardar.
4. Babu Sarada Kumar Nandi.
5. Maulvi Ashrafuddin Patwari

Khajuria Debt Settlement Board.

1. Babu Tarini Chandra Sinha Ray, Member and Chairman.

Members.

2. Maulvi Halim Bhuiya.
3. Maulvi Akramuddin Bhuiya
4. Maulvi Jamiruddin Mia.

Paikpara Debt Settlement Board.

1. Babu Chandra Mohan Das, Member and Chairman.

Members.

2. Maulvi Md. Faiz Patwari.
3. Maulvi Azizur Rahaman.
4. Babu Kali Prasanna Chaudhuri

Gobindapur Debt Settlement Board

1. Babu Bhagirath Singha, Member and Chairman

Members.

2. Maulvi Amiruddin Patwari.
3. Maulvi Nasaruddin Talukdar.
4. Maulvi Umed Ali Patwari

Rupsa Debt Settlement Board

1. Maulvi Syed Abdur Rashid Chaudhuri, Member and Chairman

Members.

2. Maulvi Syed Bijris Ahmed Chaudhuri.
3. Maulvi Md Mafizullah
4. Babu Har Chandra Majumdar.

Rajargaon Debt Settlement Board.

1. Maulvi Md. Yakub, Member and Chairman.

Members

2. Babu Jagat Bandhu Ray Chaudhuri.
3. Maulvi Muktar Ahmed.
4. Babu Jagat Bandhu Majumder.
5. Babu Nanda Lal Dey.

Kalacho Debt Settlement Board.

1. Maulvi Junab Ali Majumder, Member and Chairman

Members.

2. Babu Lalit Mohan Saha.
3. Babu Krishna Chandra Saha.
4. Maulvi Abdul Kadir Majumder.

Hajiganj Debt Settlement Board

1. Maulvi Amin Mia, Member and Chairman.

Members.

2. Babu Rup Chandra Saha
3. Babu Kshetra Mohon Saha.
4. Maulvi Aminuddin Majumder.

Barkul Debt Settlement Board.

1. Maulvi Bashiruddin Pandit, Member and Chairman.

Members.

2. Babu Radharam Majumder.
3. Maulvi Hasimuddin Atya
4. Babu Hira Lal De.

Belghar Debt Settlement Board.

1. Maulvi Selamatulla Chaudhuri, Member and Chairman.

Members

2. Maulvi Md Idris Majumder.
3. Babu Rabindra Kumar Mitra, B.A., B.T.
4. Maulvi Amjad Ali Patwari

Tamta Debt Settlement Board.

1. Maulvi Abdul Jabbar, Member and Chairman.

Members

2. Babu Satindra Mohon Majumder
3. Maulvi Aminuddin Patwari.
4. Maulvi Fazle Ali Mia.

Gandharbapur Debt Settlement Board.

1. Maulvi Lami Miah Majumder, Member and Chairman.

Members.

2. Maulvi Abdul Aziz.
3. Babu Jamini Kumar Sarma.
4. Babu Aswini Kumar Datta.

Suchipara Debt Settlement Board.

1. Maulvi Rehamuddin Pal, Member and Chairman.

Members.

2. Maulvi Rehamuddin Majumder.
3. Babu Durga Mohon Guha
4. Babu Mahendra Chandra Bakshi.
5. Maulvi Khalilur Rahman Patwari

Mehar Debt Settlement Board.

1. Maulvi Khaliler Rahman, Member and Chairman.

Members.

2. Maulvi Abdul Hoque.
3. Babu Nabadwip Chandra Saha.
4. Babu Sarada Charan Chakraborty.
5. Munshi Md. Yasin.

Raisree Debt Settlement Board.

1. Munshi Sadeq Ali Mia, Member and Chairman.

Members.

2. Munshi Alimuddin Pandit,
3. Maulvi Syed Waliulla Chaudhuri.
4. Babu Purna Chandra Sutradhar.

Chitoshi Debt Settlement Board.

1. Maulvi Abdur Rahman, Member and Chairman.

Members.

2. Babu Madhab Chandra Majumder.
3. Munshi Faiz Bux Patwari.
4. Babu Kamini Kumar Majumder.

Bagrabazar Debt Settlement Board.

1. Babu Pabitra Lal Guha, Member and Chairman.

Members.

2. Maulvi Samseruddin Patwari.
3. Maulvi Yusuf Ali Pandit.
4. Babu Nibaran Chandra Roy.
5. Maulvi Montazuddin Khan.

Hanarchar Debt Settlement Board.

1. Babu Peari Mohon De, B.A., Member and Chairman.

Members.

2. Munshi Muhammad Umar Khan.
3. Munshi Abdul Hashem Patwari.
4. Babu Matilal Majumder.

Ibrahimpur Debt Settlement Board.

1. Babu Annada Charan Chakrabarty, Member and Chairman.

Members.

2. Maulvi Siddiq Ali Dewan.
3. Babu Jyotindra Nath Dutt.
4. Munshi Gaizuddin.
5. Babu Sashi Mohan Pal.

Gazipur Debt Settlement Board.

1. Babu Ramani Mohon Kunda, Member and Chairman.

Members.

2. Babu Rajani Kanta Das.
3. Maulvi Abdul Alim Chaudhuri.
4. Maulvi Abdul Hamid Dewan.
5. Maulvi Samiraddin Howladar.

Rampur Debt Settlement Board.

1. Maulvi Abdul Kadir Patwari, Member and Chairman.

Members.

2. Babu Kali Mohon Chaudhuri.
3. Babu Shib Chandra Datta.
4. Maulvi Abdul Barik Bhuiya.
5. Maulvi Wajuddin.

Himechar Debt Settlement Board.

1. Maulvi Eakub Ali Sarkar, Member and Chairman.

Members.

2. Babu Harendra Lal Kunda.
3. Maulvi Ali Hossain Mia.
4. Babu Srinath De.

Baburhat Debt Settlement Board.

1. Babu Nil Kanta Misra, Member and Chairman.

Members.

2. Haji Akramaddin Sarkar.
3. Maulvi Md. Ali Akhan.
4. Maulvi Kaptanuddin Patwari.

Baharia Bazar Debt Settlement Board.

1. Maulvi Muhammad Salamatulla Khan, Member and Chairman.

Members.

2. Babu Prabhash Chandra Roy Choudhuri.
3. Babu Ashutosh Chakravarty.
4. Maulvi Abdul Latif Khan.
5. Maulvi Abdul Gofur Howladar.

Mohanpur Debt Settlement Board.

1. Maulvi Abdul Gani Mia, Member and Chairman.

Members.

2. Babu Radhika Mohan Saha.
3. Maulvi Nazimuddin Sircar.
4. Babu Krishnahari Dewan.
5. Maulvi Belayat Ali Kazi.

Beltali Debt Settlement Board.

1. Maulvi Gaznafar Ali Sarkar, Member and Chairman.

Members.

2. Maulvi Abdul Jalil Dhali.
3. Maulvi Abdul Latif Bhuiya.
4. Babu Chinta Haran De Sarkar.
5. Babu Sachindra Chandra Saha.

Nayergaon Debt Settlement Board.

1. Maulvi Akub Ali Pradhania, Member and Chairman.

Members.

2. Maulvi Golam Rahman Patwari.
3. Babu Purna Chandra Sarkar.
4. Babu Ramani Mohon Pal.
5. Babu Harala Saha.

Matlab Debt Settlement Board.

1. Maulvi Serajul Haque Majumder, Member and Chairman.

Members.

2. Babu Raj Kumar Poddar.
3. Munshi Hyder Ali Sarkar.
4. Babu Benu Lal Saha.
5. Maulvi Noab Ali.

Brahmanbaria subdivision.

Kasba Debt Settlement Board.

1. Circle Officer, Brahmanbaria South, Member and Chairman.

Members.

2. Munshi Aminuddin Haji.
3. Maulvi Tufazzal Ali.
4. Babu Benode Behari Ray.
5. Babu Debendra Kumar Ray.

Sadar (North) subdivision.

Daudkandi Debt Settlement Board.

1. Babu Jogendra Chandra Saha, Member and Chairman.

Members.

2. Babu Haraprasanna Bhattacharjee.
3. Munshi Karim Buksh Bhuyan.
4. Munshi Hasan Mir.
5. Munshi Saheb Ali.

Gazaria Debt Settlement Board.

1. Munshi Muhafuzullah, Member and Chairman.

Members.

2. Munshi Afzal Ali Bhuyan.
3. Munshi Mathar Mollah.
4. Babu Surendra Chandra Bhowmik.
5. Babu Nilkanta Saha.

Maruka Debt Settlement Board.

1. Babu Jagadish Chandra Pal, Member and Chairman.

Members.

2. Babu Srish Chandra Sen.
3. Munshi Mafizuddin Bhuiyan.
4. Munshi Kafiluddin Bhuiyan
5. Kazi Abdul Gaffur

Homna Debt Settlement Board.

1. Munshi Abdul Alim Master, Member and Chairman.

Members.

2. Munshi Daroga Ali.
3. Munshi Aftabuddin Sarkar.
4. Babu Rup Chandra Das.
5. Babu Radhika Mohon Saha.

Nabipur Debt Settlement Board.

1. Babu Surendra Nath Deb, Member and Chairman.

Members.

2. Babu Aswini Kumar Poddar.
3. Babu Sarada Prasanna Adhikari.
4. Maulvi Wahed Ali Sarkar.
5. Maulvi Hafizuddin Sarkar.

Dhamghar Debt Settlement Board.

1. Babu Prasanna Kumar Bhattacharji, Member and Chairman.

Members.

2. Babu Sukhendra Chandra Deb.
3. Maulvi Md. Asgar Ali, B A.
4. Maulvi Ali Nawaz Sarkar
5. Maulvi Mafizuddin Ahmed

Jafargunj Debt Settlement Board.

1. Maulvi Nabi Nawaz Bhuiyan, Member and Chairman.

Members.

2. Maulvi Ismail Bhuiyan.
3. Babu Chandi Charan Chaudhuri.
4. Babu Baidya Nath Poddar.
5. Maulvi Hasson Ali Master.

Sadar (South) subdivision.

Jhalam Debt Settlement Board.

1. Babu Priya Krishna Ray, Member and Chairman.

Members.

2. Munshi Amjad Ali Howladar.
3. Babu Sarup Chandra Nath Bhowmik.
4. Munshi Abdul Latif Master.

Baishgaon Debt Settlement Board.

1. Maulvi Ali Ahmed Mia, Member and Chairman.

Members.

2. Munshi Md. Mia.
3. Babu Kshetra Mohon Ray.
4. Babu Aswini Kumar Majumder.

Mudafarganj Debt Settlement Board.

1. Maulvi Sadar Hossain, Member and Chairman.

Members.

2. Maulvi Olimaddin.
3. Babu Sakhi Charan Banikya.

Lakshmanpur Debt Settlement Board.

1. Munshi Muhammad Joynal Abdin, Member and Chairman.

Members.

2. Maulvi Ahmed Karim Mia.
3. Munshi Hazan Ahmed Chowdhury.
4. Babu Guru Charan Deb Nath.
5. Babu Lakshmi Charan Saha.

Uttarhowla Debt Settlement Board.

1. Maulvi Bazlur Rahman, Member and Chairman.

Members.

2. Munshi Darogali Mia.
3. Babu Chandra Kumar Majumder.

Alkora Debt Settlement Board.

1. Maulvi Nural Islam Choudhury, Member and Chairman.

Members.

2. Maulvi Ali Nowab Mia.
3. Maulvi Abdul Majid Chaudhuri.
4. Maulvi Mir Ahmed Mia.

Doulkhar Debt Settlement Board.

1. Maulvi Rahimulla Choudhury, Member and Chairman

Members.

2. Maulvi Raja Mia.
3. Babu Gagan Chandra Chaudhuri.
4. Maulvi Aktarezzaman
5. Maulvi Ramijuddin.

Jodda Debt Settlement Board.

1. Maulvi Rakibuddin Ahmed, Member and Chairman.

Members.

2. Maulvi Mehar Ali Patwari.
3. Babu Nabin Chandra Acharji.
4. Maulvi Endu Mia.
5. Maulvi Sekandar Hossain.

Kankapait Debt Settlement Board.

1. Maulvi Ashrafuddin Ahmed, Member and Chairman.

Members.

2. Maulvi Akram Ali Patwari.
3. Babu Gagan Chandra Chaudhuri.
4. Babu Dinabandhu Majumder.

Payalgacha Debt Settlement Board.

1. Maulvi Majid Ali, Member and Chairman.

Members.

2. Maulvi Abdul Mia.
3. Babu Aswini Kumar Pal.

Noakhali.—No. 10103L.R.—14th July 1936.—In exercise of the power conferred by sub-section (*2*) of section 3 of the Bengal Agricultural Debtors Act, 1935 (Bengal Act VII of 1936), the Governor in Council is pleased to appoint the following persons to be Chairmen and members respectively of the undermentioned Debt Settlement Boards in the Noakhali district for a term of three years with effect from 10th August 1936 :—

Feni subdivision.

Feni Debt Settlement Board.

1. Khan Sahib Mr. Ali Haidar Chaudhuri, Member and Chairman.

Members.

2. Maulvi Abdul Bari.
3. Babu Sachindra Kumar Malakar.

Rajapur Debt Settlement Board.

1. Maulvi Fazlur Rahman, Member and Chairman.

Members.

2. Babu Sarada Kumar Saha.
3. Munshi Ramizuddin.

Panchgasia Debt Settlement Board.

1. Babu Basanta Kumar Mazumdar, Member and Chairman.

Members.

2. Maulvi Haji Emdad Ali.
3. Maulvi Kazi Mahammadal Huq.

Matavi Debt Settlement Board.

1. Maulvi Mahammadul Huq, B.L., Member and Chairman.

Members.

2. Babu Girish Chandra Mahajan.
3. Maulvi Abdul Karim.

Munshirhat Debt Settlement Board.

1. Khan Sahib Ahmad Azzam Chaudhury, Member and Chairman.

Members.

2. Maulvi Abadullah.
3. Babu Khirode Chandra Mahajan.

Fulgazi Debt Settlement Board.

1. Munshi Tafazzal Hossain, Member and Chairman

Members.

2. Munshi Mahammad Mortuza Mia.
3. Babu Jagabandhu Saha

Chhagalnaiya Debt Settlement Board.

1. Babu Kunja Mohan Poddar, B L., Member and Chairman.

Members.

2 Munshi Abdul Wahab.
3. Munshi Umed Raja.

Mahamayia Debt Settlement Board.

1 Munshi Md Yousuf Chaudhury, Member and Chairman.

Members.

2. Munshi Abdul Latif.
3. Babu Akhil Chandra Sen Baidya.

Sadar subdivision

Joyag Debt Settlement Board.

1. Maulvi Rashid Ahmed, Member and Chairman

Members.

2. Munshi Munshi Mia
3 Babu Sasi Kumar Roy.
4. Babu Girish Chandra Majumdar.

Nadara Debt Settlement Board.

1. Munshi Shona Mia Mollah, Member and Chairman.

Members.

2. Munshi Abdur Rub Mia.
3. Maulvi Md. Israil Chaudhury.
4. Babu Jagannath Nath.

Sonaimuri Debt Settlement Board.

1. Maulvi Azizur Rahman Chowdhury, Member and Chairman

Members

2. Babu Sasi Kumar Pal, B A.
3. Haji Abdul Ghani.
4. Babu Annada Charan Chakravarty.

Ramganj Debt Settlement Board.

1. Babu Ananta Kumar Majumdar, Member and Chairman.

Members

2. Babu Nabin Chandra Das
3. Munshi Ahmed Mia.
4 Babu Kshirode Chandra Banik.
5. Munshi Elahi Baksh

Bhadur Debt Settlement Board.

1. Maulvi Md. Ershad Hossain, Member and Chairman

Members.

2. Munshi Md. Kamel Bhuyan.
3. Babu Subal Chandra Nath.
4. Munshi Md. Arek Mia Patari.
5. Munshi Md Ishaque Pandit.

Darbeshpur Debt Settlement Board.

1. Maulvi Md. Darre Ali, Member and Chairman.

Members

2. Babu Kashi Chandra Nath Pandit.
3. Maulvi Md. Faiz Baksh.
4 Babu Chandra Kumar Ghosh.
5. Munshi Abbas Ali Patari.

Neazpur Debt Settlement Board.

1. Munshi Mujafar Ahmed, Member and Chairman

Members.

2. Babu Chandra Kumar Majumdar.
3. Munshi Mansur Ahmed.
4. Munshi Shona Mia.

Arjuntala Debt Settlement Board.

1. Maulvi Husan Haidar Chaudhury, Member and Chairman

Members.

2. Munshi Ismail Mia Panchayet.
3. Munshi Attar Mia
4. Munshi Abul Fazal Pandit
5. Babu Barada Prasanna Das

Serajpur Debt Settlement Board.

1. Haji Asrafali Chaudhury, Member and Chairman.

Members.

2. Babu Basanta Kumar Bhowmik.
3 Maulvi Kazi Abdul Huq.
4. Munshi Ramjan Ali Mia.

Char Hazari Debt Settlement Board.

1. Munshi Rahimbaksha Mia, Member and Chairman.

Members.

2. Munshi Abdul Hadi Patari.
3. Munshi Nazi Ahmed Chaudhury.
4. Maulvi Serajal Huq.
5. Babu Sarup Chandra Sarkar.

Charkakra Debt Settlement Board.

1. Maulvi Kadirbakhsha Mia, Member and Chairman.

Members.

2. Maulvi Aminullah.
3. Munshi Abdul Bari Mia.
4. Munshi Maksud Ahmed.
5. Babu Bharat Chandra Mahajan.

North Hamchadi Debt Settlement Board.

1. Maulvi Md. Nurazzaman Chaudhury, Member and Chairman.

Members.

2. Babu Basanta Kumar Paul.
3. Maulana Mahammedulla.
4. Maulvi Azizulla.
5. Maulvi Nurer Rahman Patari.

Dattapara Debt Settlement Board.

1. Babu Shiba Prasanna Ghose Chaudhury, Member and Chairman.

Members.

2. Babu Joy Chandra Majumdar.
3. Maulvi Abdul Latif.
4. Maulvi Abdul Hashim Pandit.
5. Maulvi Jalaluddin Ahmed.

Uttar Joypur Debt Settlement Board.

1. Maulvi Abdul Hakim, Member and Chairman.

Members.

2. Babu Barada Krishna Majumdar.
3. Babu Jagabandhu Majumdar.
4. Haji Umar Ali.
5. Maulvi Abdul Gani Patari.

Laharkandi Debt Settlement Board.

1. Maulvi Lakiatullah Mia, Member and Chairman.

Members.

2. Maulvi Abdul Sattar Chaudhury.
3. Babu Lakshmi Charan Majumdar.
4. Babu Kailash Chandra Majumdar.
5. Maulvi Abdul Gani Bhuiya.

Bhabaniganj Debt Settlement Board.

1. Maulvi Sujayetullah Mia, Member and Chairman

Members.

2. Babu Mahesh Chandra Paul.
3. Babu Nagendra Kumar Paul.
4. Maulvi Anwar Ali Mia.
5. Maulvi Md. Yakub.

Howrah.— No. 10104L.R.—14th July 1936.—In exercise of the power conferred by sub-section (2) of section 3 of the Bengal Agricultural Debtors Act, 1935 (Bengal Act VII of 1936), the Governor in Council is pleased to appoint the following persons to be Chairmen and members respectively of the undermentioned Debt Settlement Boards in the Howrah district for a term of three years with effect from 10th August 1936 :—

Sadar subdivision.

Domjur Debt Settlement Board.

1. Babu Satkari Mukherjee, Member and Chairman.

Members.

2. Babu Mahendra Nath Dhara.
3. Babu Anukul Chandra Datta.
4. Babu Priyanath Hati.
5. Babu Bhutnath Parui.

Mahiari Debt Settlement Board.

1. Babu Sailaprosad Banerjee, B.L., Member and Chairman.

Members.

2. Babu Aloke Chandra Banerjee.
3. Babu Nandalal Banerjee.
4. Babu Adhar Chandra Naskar.
5. Munshi Abdul Matlib Sheikh.

Makardah Debt Settlement Board.

1. Babu Suresh Chandra Chatterjee, Member and Chairman.

Members.

2. Babu Ganesh Chandra Chatterjee.
3. Babu Jiban Krishna Banerjee.
4. Babu Probodh Kumar Banerjee.
5. Dr. Nandalal Chatterjee.

Uluberia subdivision.

Benapur Debt Settlement Board.

1. Babu Upendra Nath Shee, Member and Chairman.

Members.

2. Maulvi Abdus Samad.
3. Babu Mahendranath Paramanik.
4. Maulvi Akbar Ali Khan.
5. Babu Narendranath Chakraborty.

Shyampur Debt Settlement Board.

1. Babu Amarnath Pakhira, Member and Chairman.

Members.

2. Maulvi Kasimuddin Sheikh.
3. Babu Girish Chandra Mandal.
4. Babu Kirtibas Jana.
5. Babu Indu Bhusan Bera.

Nakol Debt Settlement Board.

1. Babu Nirod Nath Misra, Member and Chairman.

Members.

2. Maulvi Tamizuddin Sheikh.
3. Babu Surendranath Bera.
4. Babu Aswini Kumar Manna.
5. Babu Jogendranath Chakraborty.

Bagnan Debt Settlement Board.

1. Maulvi Wahedul Huq, Member and Chairman.

Members.

2. Babu Rakhal Chandra Roy
3. Babu Dasarathi Biswas.
4. Babu Nani Lal Mitra
5. Babu Susil Kumar Mitra.

Harishpur Debt Settlement Board.

1. Babu Bidhu Bhusan Roy, Member and Chairman.

Members.

2. Babu Surendra Nath Patra.
3. Babu Surendra Nath Duari.
4. Babu Manindra Nath Pal.
5. Babu Pulin Chandra Majee.

Khosalpur Debt Settlement Board.

1. Babu Sakti Sadhan Koley, Member and Chairman.

Members.

2. Babu Amulyadhan Koley.
3. Babu Kartick Chandra Koley.
4. Babu Manindranath Hajra.
5. Maulvi Rasan Ali Molla.

Tajpur Debt Settlement Board.

1. Babu Prosad Chandra Chakraburty, Member and Chairman.

Members.

2. Babu Amarnath Bhattacherjee.
3. Babu Surendranath Chakraburty.
4. Babu Panchanan Dhali.
5. Babu Manmatha Nath Sarikot.

Tulsibaria Debt Settlement Board.

1. Babu Uthanpado Chakraburty, Member and Chairman.

Members.

2. Babu Sadhan Chandra Adak
3. Babu Pulin Behari Langal
4. Munshi Sujaet Hossain.
5. Babu Panchanan Chatterjee

Udong Debt Settlement Board.

1. Babu Fanindra Nath Paral, Member and Chairman.

Members.

2. Babu Tarapado Roy.
3. Babu Rajani Kanta Dhara.
4. Babu Durjadhan Dhawa.
5. Babu Nutherhari Dhara.

Howrah - Midnapore. No. 10105L.R. 14th July 1936.- In exercise of the power conferred by section 5 of the Bengal Agricultural Debtors Act, 1935 (Bengal Act VII of 1936), the Governor in Council is pleased to delegate to the Commissioner of the Burdwan Division his powers under sub-section (2) of section 3 and under section 4 of the said Act in regard to Debt Settlement Boards in the districts of Howrah and Midnapore.

Dacca - Mymensingh - Faridpur - Bakarganj. - No. 10106L.R. — 14th July 1936. In exercise of the power conferred by section 5 of the Bengal Agricultural Debtors Act, 1935 (Bengal Act VII of 1936), the Governor in Council is pleased to delegate to the Commissioner of the Dacca Division his powers under sub-section (2) of section 3 and under section 4 of the said Act in regard to Debt Settlement Boards in the districts of Dacca, Mymensingh, Faridpur and Bakarganj.

Chittagong-Tippera-Noakhali. — No. 10107L.R. 14th July 1936. In exercise of the power conferred by section 5 of the Bengal Agricultural Debtors Act, 1935 (Bengal Act VII of 1936), the Governor in Council is pleased to delegate to the Commissioner of the Chittagong Division his powers under sub-section (2) of section 3 and under section 4 of the said Act in regard to Debt Settlement Boards in the districts of Chittagong, Tippera and Noakhali.

Rajshahi-Dinajpur-Jalpaiguri-Rangpur-Bogra - Pabna-Malda. No. 10108L.R. - 14th July 1936. In exercise of the power conferred by section 5 of the Bengal Agricultural Debtors Act, 1935 (Bengal Act VII of 1936), the Governor in Council is pleased to delegate to the Commissioner of the Rajshahi Division his powers under sub-section (2) of section 3 and under section 4 of the said Act in regard to Debt Settlement Boards in the districts of Rajshahi, Dinajpur, Jalpaiguri, Rangpur, Bogra, Pabna and Malda.

Rajshahi.—No. 10109L.R.—14th July 1936.—In exercise of the power conferred by sub-section (*1*) of section 3 of the Bengal Agricultural Debtors Act, 1935 (Bengal Act VII of 1936), the Governor in Council is pleased to establish the undermentioned Debt Settlement Boards in the Sadar subdivision of the Rajshahi district for the local areas respectively shown against each.

In exercise of the power conferred by sub-section (*1*) of section 40 of the said Act read with rules 31 and 82 of the Bengal Agricultural Debtors Rules, 1936, the Governor in Council is pleased to appoint the Subdivisional Magistrate of Sadar, *ex-officio*, as Ordinary Appellate Officer and the munsif of Rampur-Boalia (Rajshahi), *ex-officio*, as Special Appellate Officer for each of the said local areas :—

Name of Debt Settlement Board.	Name of union comprising the local area.
Godagari	.. Godagari.
Matikata	.. Matikata.
Talanda	.. Talanda.
Brikutsa	.. Jugipara.

Name of Debt Settlement Board.	Names of mauzas comprising the local area, with jurisdiction list number of each mauza.		
Keogachi ..	Choto Bangram	..	114
	Musrail	..	128
	Sirail	..	113
	Meherchandi	..	120
	Jamalpur	..	116
	Bhadra	..	115
	Keogachi	..	118
	Mirzapur	..	119
	Dharampur	..	195
	Dashmari	..	194
	Khojapur	..	196
	Kajla	..	197
	Satberia	..	193
	Ramchandrapur	..	198
	Matihar	..	117
	Paba	..	110
Dighalkandi.. ..	Dighalkandi	..	81
	Namajgram	..	82
	Baneswar	..	83
	Sibpur	..	65
	Beharipara	..	84
	Durgapur	..	85
	Hatinada	..	86
	Nayapara	..	134
	Tonapara	..	136
	Maipara	..	137
	Bhangra	..	78
	Fulkhanpara	..	139
	Bharra	..	138
Charghat ..	Charghat	..	42
	Gopalpur	..	43
	Mianpur	..	45
	Meramatpur	..	44
	Chandanshahar	..	55
	Anupampur	..	46
	Gaonra	..	47
	Mangli	..	48
	Bamnidaha	..	49
	Paranpur	..	51
	Mialik Gaonra	..	52
	Pirojpur	..	56
	Bil Meramatpur	..	54
	Chandpur Kankramari	..	53
	Hajrahati	..	57
	Raota	..	60
	Panchberia	..	61
	Tulberia	..	62
	Barbaria	..	73
	Monaharpur	..	65
	Bamanpara	..	58

Name of Debt Settlement Board.	Names of mauzas comprising the local area, with jurisdiction list number of each mauza.		
Raipara ..	Singa	..	50
	Barid-Basail	..	48
	Raipara	..	49
	Baharampur	..	54
	Chouberia	..	58
	Hoja Anantakandi	..	89
	Kismat Hoja	..	90
	Maria	..	59
	Kasimpur	..	88
	Shahbajpur	..	87
	Pali	..	61
	Joykrishnapur	..	62
	Maria Kismat	..	60

Rangpur.—No. 10110L.R.—14th July 1936.—In exercise of the power conferred by sub-section (*1*) of section 3 of the Bengal Agricultural Debtors Act, 1935 (Bengal Act VII of 1936), th Governor in Council is pleased to establish the undermentioned Debt Settlement Boards in the Sadar subdivision of the Rangpur district for the local areas respectively shown against each.

In exercise of the power conferred by sub-section (*1*) of section 40 of the said Act read with rules 31 and 82 of the Bengal Agricultural Debtors Rules, 1936, the Governor in Council is pleased to appoint the Subdivisional Magistrate of Sadar, *ex-officio*, as Ordinary Appellate Officer and the senior munsif of Rangpur, *ex-officio*, as Special Appellate Officer for each of the said local areas :

Name of Debt Settlement Board.	Name of union comprising the local area
Uttam	.. Uttam.

Name of Debt Settlement Board.	Names of mauzas comprising the local area, with jurisdiction list number of each mauza.		
Mirzapur ..	Sibdayalpara	..	401
	Rajaram Digar	..	400
	Ismailpur	..	398
	Ruhia Balinathpur	..	396
	Nurpur Rampur	..	397
	Haripur	..	387

Rangpur.—No. 10111L.R.—14th July 1936.—In exercise of the power conferred by sub-section (*1*) of section 3 of the Bengal Agricultural Debtors Act, 1935 (Bengal Act VII of 1936), the Governor in Council is pleased to establish the undermentioned Debt Settlement Boards in the Gaibandha subdivision of the Rangpur district for the local areas respectively shown against each.

In exercise of the power conferred by sub-section (*1*) of section 40 of the said Act read with rules 31 and 82 of the Bengal Agricultural Debtors Rules, 1936, the Governor in Council is pleased to appoint the Subdivisional Magistrate of Gaibandha, *ex officio*, as Ordinary Appellate Officer and the senior munsif of Rangpur, *ex officio*, as Special Appellate Officer for each of the said local areas :—

Name of Debt Settlement Board.	Name of union comprising the local area.
Komarnai	.. Kholahati.
Chandipur	.. Chandipur.
Palashbari	.. Palashbari.

Rangpur.—No. 10112L.R.—14th July 1936.—In exercise of the power conferred by sub-section (*1*) of section 3 of the Bengal Agricultural Debtors Act, 1935 (Bengal Act VII of 1936), the Governor in Council is pleased to establish the undermentioned Debt Settlement Boards in the Kurigram subdivision of the Rangpur district for the local areas respectively shown against each.

In exercise of the power conferred by sub-section (*1*) of section 40 of the said Act read with rules 31 and 82 of the Bengal Agricultural Debtors Rules, 1936, the Governor in Council is pleased to appoint the Subdivisional Magistrate of Kurigram, *ex officio*, as Ordinary Appellate Officer and the senior munsif of Rangpur, *ex officio*, as Special Appellate Officer for each of the said local areas :—

Name of Debt Settlement Board.	Name of union comprising the local area.
Ramna	.. Ramna.
Kulaghat	.. Kulaghat.

Rangpur.—No. 10113L.R.—14th July 1936.—In exercise of the power conferred by sub-section (*1*) of section 3 of the Bengal Agricultural Debtors Act, 1935 (Bengal Act VII of 1936), the Governor in Council is pleased to establish the undermentioned Debt Settlement Boards in the Nilphamari subdivision of the Rangpur district for the local areas respectively shown against each.

In exercise of the power conferred by sub-section (*1*) of section 40 of the said Act read with rules 31 and 82 of the Bengal Agricultural Debtors Rules, 1936, the Governor in Council is pleased to appoint the Subdivisional Magistrate of Nilphamari, *ex officio*, as Ordinary Appellate Officer and the senior munsif of Rangpur, *ex officio*, as Special Appellate Officer for each of the said local areas :—

Name of Debt Settlement Board.	Name of union comprising the local area.
Saidpur	.. Saidpur.
Boragari	.. Boragari.

Dinajpur.—No. 10114L.R.—14th July 1936.—In exercise of the power conferred by sub-section (*1*) of section 3 of the Bengal Agricultural Debtors Act, 1935 (Bengal Act VII of 1936), the Governor in Council is pleased to establish the undermentioned Debt Settlement Boards in the Sadar subdivision of the Dinajpur district for the local areas respectively shown against each.

In exercise of the power conferred by sub-section (*1*) of section 40 of the said Act read with rules 31 and 82 of the Bengal Agricultural Debtors Rules, 1936, the Governor in Council is pleased to appoint the Subdivisional Magistrate of Sadar, *ex-officio*, as Ordinary Appellate Officer and the senior munsif of Dinajpur, *ex-officio*, as Special Appellate Officer for each of the said local areas :—

Name of Debt Settlement Board.	Name of union comprising the local area.
Nasrathpur	.. Nasrathpur.
Satnala	.. Satnala
Fatehjangpur	.. Fatehjangpur.
Bahin	.. Bahin.
Binodenagar	.. Binodenagar.
Daudpur	.. Daudpur.

Dinajpur.—No. 10115L.R.—14th July 1936.—In exercise of the power conferred by sub-section (*1*) of section 3 of the Bengal Agricultural Debtors Act, 1935 (Bengal Act VII of 1936), the Governor in Council is pleased to establish the undermentioned Debt Settlement Boards in the Thakurgaon subdivision of the Dinajpur district for the local areas respectively shown against each.

In exercise of the power conferred by sub-section (*1*) of section 40 of the said Act read with rules 31 and 82 of the Bengal Agricultural Debtors Rules, 1936, the Governor in Council is pleased to appoint the Subdivisional Magistrate of Thakurgaon, *ex-officio*, as Ordinary Appellate Officer and the senior munsif of Dinajpur, *ex-officio*, as Special Appellate Officer for each of the said local areas :—

Name of Debt Settlement Board.	Name of union comprising the local area.
Bochaganj	.. Masihati.
Bhomradah	.. Jangaon.
Birganj	.. Sujanpur.
Hariharpur	.. Hariharpur.
Haripur	.. Haripur.

Dinajpur.—No. 10116L.R.—14th July 1936.—In exercise of the power conferred by sub-section (*1*) of section 3 of the Bengal Agricultural Debtors Act, 1935 (Bengal Act VII of 1936), the Governor in Council is pleased to establish the undermentioned Debt Settlement Boards in the Balurghat subdivision of the Dinajpur district for the local areas respectively shown against each.

In exercise of the power conferred by sub-section (*1*) of section 40 of the said Act read with rules 31 and 82 of the Bengal Agricultural Debtors Rules, 1936, the Governor in Council is pleased to appoint the Subdivisional Magistrate of Balurghat, *ex-officio*, as Ordinary Appellate Officer and the senior munsif of Dinajpur, *ex-officio*, as Special Appellate Officer for each of the said local areas :—

Name of Debt Settlement Board.	Name of union comprising the local area.
Boaldar	.. Boaldar.
Deor	.. Deor.
Birampur	.. Birampur.
Najipur	.. Najipur.
Patnitola	.. Patnitola.
Sapahar	.. Sapahar.
Umar	.. Umar.

Bogra.—No. 10117L.R.—14th July 1936.—In exercise of the power conferred by sub-section (*1*) of section 3 of the Bengal Agricultural Debtors Act, 1935 (Bengal Act VII of 1936), the Governor in Council is pleased to establish the undermentioned Debt Settlement Boards in the Sadar subdivision of the Bogra district for the local areas respectively shown against each.

In exercise of the power conferred by sub-section (*1*) of section 40 of the said Act read with rules 31 and 82 of the Bengal Agricultural Debtors Rules, 1936, the Governor in Council is pleased to appoint the Subdivisional Magistrate of Sadar, *ex officio*, as Ordinary Appellate Officer and the Senior Munsif of Bogra, *ex officio*, as Special Appellate Officer for each of the said local areas :—

Name of Debt Settlement Board	Name of union comprising the local area.
Balighata	.. Balighata.
Jaipurhat	.. Jaipurhat.
Rukindipur	.. Rukindipur.
Santahar	.. Santahar.
Dupchanchia	.. Dupchanchia
Chandanbaisha Kanaipur	.. Chandanbaisha Kanaipur.
Joregachha	.. Joregachha.
Sonatola	.. Sonatola.
Shimabari	. Shimabari.
Fapore	. Fapore.
Shabgram	.. Shabgram.
Chupinagar	.. Chupinagar.
Mokamtola	.. Mokamtola
Baliadighi	.. Baliadighi.
Kahaloo	. Kahaloo.

Pabna. No 10118L.R. 14th July 1936. -In exercise of the power conferred by sub-section (*1*) of section 3 of the Bengal Agricultural Debtors Act, 1935 (Bengal Act VII of 1936), the Governor in Council is pleased to establish the undermentioned Debt Settlement Boards in the Sadar subdivision of the Pabna district for the local areas respectively shown against each.

In exercise of the power conferred by sub-section (*1*) of section 40 of the said Act read with rules 31 and 82 of the Bengal Agricultural Debtors Rules, 1936, the Governor in Council is pleased to appoint the Subdivisional Magistrate of Sadar, *ex officio*, as Ordinary Appellate Officer and the Senior Munsif of Pabna *ex officio*, as Special Appellate Officer for each of the said local areas :—

Name of Debt Settlement Board.	Name of union comprising the local area.
Malanchi	.. Malanchi.
Dapunia	.. Dapunia.
Chatmohar	.. Chatmohar.
Iswardi	.. Iswardi.
Bera	.. Bera.
Jatsakhini	.. Jatsakhini.

Pabna.—No. 10119L.R.—14th July 1936.—In exercise of the power conferred by sub-section (*1*) of section 3 of the Bengal Agricultural Debtors Act, 1935 (Bengal Act VII of 1936), the Governor in Council is pleased to establish the undermentioned Debt Settlement Boards in the Sirajganj subdivision of the Pabna district for the local areas respectively shown against each.

In exercise of the power conferred by sub-section (*1*) of section 40 of the said Act read with rules 31 and 82 of the Bengal Agricultural Debtors Rules, 1936, the Governor in Council is pleased to appoint the Subdivisional Magistrate of Sirajganj, *ex officio*, as Ordinary Appellate Officer and the Senior Munsif of Pabna, *ex officio*, as Special Appellate Officer for each of the said local areas :—

Name of Debt Settlement Board.	Name of union comprising the local area.
Shahazadpur	.. Shahazadpur.
Ullapara	.. Ullapara.

Name of Debt Settlement Board.	Name of municipality comprising the local area.
Sirajganj Municipality	.. Sirajganj.

Malda.—No. 10120L.R.—14th July 1936.—In exercise of the power conferred by sub-section (*1*) of section 3 of the Bengal Agricultural Debtors Act, 1935 (Bengal Act VII of 1936), the Governor in Council is pleased to establish the undermentioned Debt Settlement Boards in the Sadar subdivision of the Malda district for the local areas respectively shown against each.

In exercise of the power conferred by sub-section (*1*) of section 40 of the said Act read with rules 31 and 82 of the Bengal Agricultural Debtors Rules, 1936, the Governor in Council is pleased to appoint the Subdivisional Magistrate of Sadar, *ex-officio*, as Ordinary Appellate Officer and the senior munsif of Malda, *ex-officio*, as Special Appellate Officer for each of the said local areas :—

Name of Debt Settlement Board.	Name of union comprising the local area.
Milki	.. Milki.
Jodupur	.. Jodupur.
Bholahat	.. Bholahat.
Sujapur	.. Sujapur.
Golapganj	.. Golapganj.
Barai	.. Barai.
Bhingole	.. Bhingole.
Sadlichak	.. Sadlichak.
Malior	.. Malior.
Araidanga	.. Araidanga.
Pukhuria	.. Pukhuria.
Chandmoni	.. Chandmoni.
Malatipur	.. Malatipur.
Kharba	.. Kharba.
Gobratala	.. Gobratala and Baliadanga.
Maharajpur	.. Maharajpur.
Namosankarbati	.. Namosankarbati and Debinagar.
Khamar	.. Khamar and Narendrapur.
Ramchandrapur	.. Ramchandrapur.
Monakasa	.. Monakasa and Benodepur.
Kansat	.. Kansat.
Rahanpur	.. Rahanpur and Gomostapur.

Name of Debt Settlement Board.	Name of police-station comprising the local area.
Habibpur	.. Habibpur.
Gazole	.. Gazole.
Bamangola	.. Bamangola.
Malda	.. Malda.
Nachole	.. Nachole.
Parbatipur	.. Gomastapur excepting union board areas.

Mymensingh.—No. 10121L.R.—14th July 1936.—In exercise of the power conferred by sub-section (*1*) of section 3 of the Bengal Agricultural Debtors Act, 1935 (Bengal Act VII of 1936), the Governor in Council is pleased to establish the undermentioned Debt Settlement Boards in the Tangail subdivision of the Mymensingh district for the local areas respectively shown against each.

In exercise of the power conferred by sub-section (*1*) of section 40 of the said Act read with rules 31 and 82 of the Bengal Agricultural Debtors Rules, 1936, the Governor in Council is pleased to appoint the Subdivisional Magistrate of Tangail, *ex-officio*, as Ordinary Appellate Officer and the senior munsif of Mymensingh, *ex-officio*, as Special Appellate Officer for each of the said local areas :—

Name of Debt Settlement Board.	Names of mauzas comprising the local area, with jurisdiction list number of each mauza.	
Nandanpur ..	Dubail ..	110
	Samaspur ..	108
	Suti ..	109
	Nandanpur ..	106
	Sundar ..	118
	Konabari ..	105
Jamurki ..	Mahera ..	4
	Jamurki ..	1
	Pakulla ..	20
	Goran ..	19
	Satiachara ..	18
	Karail ..	2
	Baniara ..	13
Ellenga ..	Ellenga ..	82
	Baniabari ..	81
	Bansi ..	78
	Hijli ..	76
	Pathail Kandi ..	83
	Pauli ..	153
	Mahela ..	154
	Masajan ..	80
	Rajabari ..	84
	Swaruppur ..	79

Mymensingh.- No. 10122L.R.—14th July 1936.—In exercise of the power conferred by sub section (*1*) of section 3 of the Bengal Agricultural Debtors Act, 1935 (Bengal Act VII of 1936), the Governor in Council is pleased to establish the undermentioned Debt Settlement Boards in the Kishoreganj subdivision of the Mymensingh district for the local areas respectively shown against each.

In exercise of the power conferred by sub-section (*1*) of section 40 of the said Act read with rules 31 and 82 of the Bengal Agricultural Debtors Rules, 1936, the Governor in Council is pleased to appoint the Subdivisional Magistrate of Kishoreganj, *ex officio*, as Ordinary Appellate Officer and the senior munsif of Mymensingh, *ex officio*, as Special Appellate Officer for each of the said local areas :—

Name of Debt Settlement Board.	Name of union comprising the local area.
Banagram ..	Banagram.
Kuliar Char ..	Kuliar Char.

Name of Debt Settlement Board.	Names of mauzas comprising the local area, with jurisdiction list number of each mauza.	
Pakundia-Jangalia ..	Char Kawna ..	2
	Charteki ..	3
	Dagdaga ..	4
	Jangalia ..	5
	Biswanathpur ..	6
	Kazihati ..	10
	Tarakandi ..	14
	Pakundia ..	17
	Hapania Lakshmia ..	18
	Paik Lakshmia ..	19

Name of Debt Settlement Board.	Names of mauzas comprising the local area, with jurisdiction list number of each mauza.		
	Dardara	..	20
	Char Faradi	..	21
	Char Terateki	..	22
	Char Kursa	..	23
	Charalbanda	..	24
	Kahet Dhandul	..	25
	Kursa	..	26
	Hijalia	..	27
	Chaliagope	..	28
	Marura	..	29
	Baratia	..	30
	Lakshmia	..	31
	Satrakhali	..	33
	Char Mirjapur	..	38
	Baga	..	32
	Chaliagope	..	35
	Barshagati	..	36
	Mirjapur	..	37

Mymensingh.—No. 10123L.R.—14th July 1936.—In exercise of the power conferred by sub-section (*1*) of section 3 of the Bengal Agricultural Debtors Act, 1935 (Bengal Act VII of 1936), the Governor in Council is pleased to establish the undermentioned Debt Settlement Boards in the Jamalpur subdivision of the Mymensingh district for the local areas respectively shown against each.

In exercise of the power conferred by sub-section (*1*) of section 40 of the said Act read with rules 31 and 82 of the Bengal Agricultural Debtors Rules, 1936, the Governor in Council is pleased to appoint the Subdivisional Magistrate of Jamalpur, *ex officio*, as Ordinary Appellate Officer and the senior munsif of Mymensingh, *ex officio*, as Special Appellate Officer for each of the said local areas :—

Name of Debt Settlement Board.	Name of union comprising the local area.
Ranagachha	.. Ranagachha.
Malijhikanda	.. Malijhikanda.

Name of Debt Settlement Board.	Names of mauzas comprising the local area, with jurisdiction list number of each mauza.		
Nayanagar ..	Megharbari	..	19
	Chakdaha	..	41
	Sadarbari	..	42
	Nayanagar	..	43
	Digolerbari	..	44
	Shajadpur	..	45
	Fulchinna	..	46
	Adhipaita	..	47
	Jalapur	..	68
Kalikapur ..	Gamaria	..	41
	Banianirchar	..	39
	Kalikapur	..	38
	Gobindapur	..	37
	Charbhabasur	..	42

Mymensingh.—No. 10124L.R.—14th July 1936.—In exercise of the power conferred by sub-section (*1*) of section 3 of the Bengal Agricultural Debtors Act, 1935 (Bengal Act VII of 1936), the Governor in Council is pleased to establish the undermentioned Debt Settlement Boards in the Netrakona subdivision of the Mymensingh district for the local areas respectively shown against each.

In exercise of the power conferred by sub-section (*1*) of section 40 of the said Act read with rules 31 and 82 of the Bengal Agricultural Debtors Rules, 1936, the Governor in Council is pleased to appoint the Subdivisional Magistrate of Netrakona, *ex officio*, as Ordinary Appellate Officer and the senior munsif

of Mymensingh, *ex officio*, as Special Appellate Officer for each of the said local areas :

Name of Debt Settlement Board.	Name of union comprising the local area
Barhatta	.. Barhatta.
Gohalakanda	.. Gohalakanda.
Khalisaur	.. Khalisaur.
Sandikona	.. Sandikona.

Name of Debt Settlement Board.	Names of mauzas comprising the local area, with jurisdiction list number of each mauza.		
Thakurakona ..	Barni	..	393
	Shekhergati	..	396
	Betati	..	399
	Ashadati	..	398
	Panchpai	..	400
	Banda-jalsosh	..	397
	Bhagrua	..	402
	Tatiar	.	403
	Bishdhar	..	404
	Durgasram	..	367
	Satrasri	..	368
	Haidhar	..	366
	Thakurakona	..	365
	Charigati	..	363
	Kagajipara	..	370
	Latibpur	..	369
	Nayanagar	..	371
Mohanganj ..	Birampur	..	630
	Daulatpur	..	713
	Pukhuria	..	714
	Barthargati	..	715
	Routhpara	..	716
	Hat Mohanganj	..	717
	Tengapura	..	718
	Mailura	..	719
	Deothan	..	720
	Mirargati	..	721
	Baranchira	..	722
	Loarbahar	..	724
	Kabiratnar bahai	..	725
	Nagdora	..	726
	Charbarkashia	..	727
	Bartakona	..	728
	Satur	..	729
	Kaziati	..	730
	Noahal	..	731
	Panur	..	732
	Banda-paleha	..	733
	Dhanpur	..	734
	Pabai	..	736
	Barera banagati	..	735
	Pabaipara	..	737
	Khudirpur	.	739
	Khuchirgaon	..	755
	Baham	..	785

Mymensingh. No. 10125L R.—14th July 1936 In exercise of the power conferred by sub-section (*1*) of section 3 of the Bengal Agricultural Debtors Act 1935 (Bengal Act VII of 1936), the Governor in Council is pleased to establish the undermentioned Debt Settlement Boards in the Sadar subdivision of the Mymensingh district for the local areas respectively shown against each

In exercise of the power conferred by sub-section (*1*) of section 40 of the said Act read with rules 31 and 82 of the Bengal Agricultural Debtors Rules, 1936, the Governor in Council is pleased to appoint the Subdivisional Magistrate of Sadar, *ex officio*, as Ordinary Appellate Officer and the senior munsif

of Mymensingh, *ex officio*, as Special Appellate Officer for each of the said local areas :—

Name of Debt Settlement Board.	Name of union comprising the local area.
Iswarganj	.. Iswarganj.
Fulpur	.. Fulpur.
Saltia	.. Saltia.
Bashati	.. Bashati.

Faridpur.—No. 10126L.R.—14th July 1936.—In exercise of the power conferred by sub-section (*1*) of section 3 of the Bengal Agricultural Debtors Act, 1935 (Bengal Act VII of 1936), the Governor in Council is pleased to establish the undermentioned Debt Settlement Boards in the Goalundo subdivision of the Faridpur district for the local areas respectively shown against each.

In exercise of the power conferred by sub-section (*1*) of section 40 of the said Act read with rules 31 and 82 of the Bengal Agricultural Debtors Rules, 1936, the Governor in Council is pleased to appoint the Subdivisional Magistrate of Goalundo, *ex-officio*, as Ordinary Appellate Officer and the senior munsif of Faridpur, *ex officio*, as Special Appellate Officer for each of the said local areas :—

Name of Debt Settlement Board.	Name of union comprising the local area.
Khankhanapur	.. Khankhanapur.
Basantapur	.. Basantapur.
Daulatdia	.. Daulatdia.
Ratandia	.. Ratandia.
Khanganj	.. Khanganj.
Pangsa	.. Pangsa.
Jasai	.. Jasai
Mrigi	.. Mrigi.
Mourat	.. Mourat.
Ramdia	.. Ramdia.
Jamalpur	.. Jamalpur.

Faridpur.—No. 10127L.R.—14th July 1936.—In exercise of the power conferred by sub-section (*1*) of section 3 of the Bengal Agricultural Debtors Act, 1935 (Bengal Act VII of 1936), the Governor in Council is pleased to establish the undermentioned Debt Settlement Boards in the Madaripur subdivision of the Faridpur district for the local areas respectively shown against each.

In exercise of the power conferred by sub-section (*1*) of section 40 of the said Act read with rules 31 and 82 of the Bengal Agricultural Debtors Rules, 1936, the Governor in Council is pleased to appoint the Subdivisional Magistrate of Madaripur, *ex officio*, as Ordinary Appellate Officer and the senior munsif of Faridpur, *ex officio*, as Special Appellate Officer for each of the said local areas :—

Name of Debt Settlement Board.	Name of union comprising the local area.
Angaria	.. Angaria.
Mustafapur	.. Mistafapur.
Shibchar	.. Shibchar.

Faridpur.—No. 10128L.R.—14th July 1936.—In exercise of the power conferred by sub-section (*1*) of section 3 of the Bengal Agricultural Debtors Act, 1935 (Bengal Act VII of 1936), the Governor in Council is pleased to establish the undermentioned Debt Settlement Boards in the Gopalganj subdivision of the Faridpur district for the local areas respectively shown against each.

In exercise of the power conferred by sub-section (*1*) of section 40 of the said Act read with rules 31 and 82 of the Bengal Agricultural Debtors Rules, 1936, the Governor in Council is pleased to appoint the Subdivisional Magistrate of Gopalganj, *ex officio*, as Ordinary Appellate Officer and the senior munsif of Faridpur, *ex officio*, as Special Appellate Officer for each of the said local areas :—

Name of Debt Settlement Board.	Name of union comprising the local area.
Ulpur	.. Ulpur.
Kasiani	.. Kasiani.

Noakhali.—No. 10129L.R.—14th July 1936. In exercise of the power conferred by sub-section (*1*) of section 3 of the Bengal Agricultural Debtors Act, 1935 (Bengal Act VII of 1936), the Governor in Council is pleased to establish the undermentioned Debt Settlement Boards in the Feni subdivision of the Noakhali district for the local areas respectively shown against each.

In exercise of the power conferred by sub-section (*1*) of section 40 of the said Act read with rules 31 and 82 of the Bengal Agricultural Debtors Rules, 1936, the Governor in Council is pleased to appoint the Subdivisional Magistrate of Feni, *ex-officio*, as Ordinary Appellate Officer and the senior munsif of Sudharam (Noakhali), *ex-officio*, as Special Appellate Officer for each of the said local areas :—

Name of Debt Settlement Board.	Name of union comprising the local area
Feni ..	Feni.
Rajapur ..	Rajapur.
Panchgasia ..	Panchgasia.
Motavi ..	Motavi.
Munshirhat ..	Munshirhat.
Fulgazi ..	Fulgazi.
Chhagalnaiya ..	Chhagalnaiya.
Mahamayia ..	Mahamaiya.

Noakhali.—No. 10130L.R. 14th July 1936. In exercise of the power conferred by sub-section (*1*) of section 3 of the Bengal Agricultural Debtors Act, 1935 (Bengal Act VII of 1936), the Governor in Council is pleased to establish the undermentioned Debt Settlement Boards in the Sadar subdivision of the Noakhali district for the local areas respectively shown against each.

In exercise of the power conferred by sub-section (*1*) of section 40 of the said Act read with rules 31 and 82 of the Bengal Agricultural Debtors Rules, 1936, the Governor in Council is pleased to appoint the Subdivisional Magistrate of Sadar, *ex officio*, as Ordinary Appellate Officer and the senior munsif of Sudharam (Noakhali), *ex officio*, as Special Appellate Officer for each of the said local areas :—

Name of Debt Settlement Board.	Name of union comprising the local area.
Joyag ..	Joyag.
Nadana ..	Nadana.
Sonaimuri ..	Sonaimuri.
Ramganj ..	Ramganj.
Bhadur ..	Bhadur
Darbeshpur ..	Darbeshpur.
Neazpur ..	Neazpur.
Arjuntala ..	Arjuntala
Serajpur ..	Serajpur
Char Hazari ..	Char Hazari.
Charkakra ..	Charkakra
North Hamchadi ..	North Hamchadi.
Dattapara ..	Dattapara
Uttar Joypur ..	Uttar Joypur
Laharkandi ..	Laharkandi.
Bhabaniganj ..	Bhabaniganj.

Bakarganj. No. 10131L.R. 14th July 1936.—In exercise of the power conferred by sub-section (*1*) of section 3 of the Bengal Agricultural Debtors Act, 1935 (Bengal Act VII of 1936), the Governor in Council is pleased to establish the undermentioned Debt Settlement Boards in the Sadar subdivision of the Bakarganj district for the local areas respectively shown against each.

In exercise of the power conferred by sub-section (*1*) of section 40 of the said Act read with rules 31 and 82 of the Bengal Agricultural Debtors Rules, 1936, the Governor in Council is pleased to appoint the Subdivisional Magistrate of Bakarganj, *ex officio*, as Ordinary Appellate

Officer and the senior munsif of Barisal, *ex-officio*, as Special Appellate Officer for each of the said local areas :—

Name of Debt Settlement Board.	Name of union comprising the local area.
Raipasha-Karapur	.. Raipasha-Karapur.
Garuria	.. Garuria.
Keora	.. Keora.
Kulkati	.. Kulkati.
Galua	.. Galua.
Guthia	.. Guthia.
Barajalia	.. Barajalia.
Alimabad	.. Alimabad.
Chandsi	.. Chandsi.
Dehergati	.. Dehergati.
Gachhua	.. Gachhua.

Bakarganj.—No. 10132L.R.—14th July 1936.—In exercise of the power conferred by sub-section (*1*) of section 3 of the Bengal Agricultural Debtors Act, 1935 (Bengal Act VII of 1936), the Governor in Council is pleased to establish the undermentioned Debt Settlement Boards in the Dakshin Shabazpur (Bhola) subdivision of the Bakarganj district for the local areas respectively shown against each.

In exercise of the power conferred by sub-section (*1*) of section 40 of the said Act read with rules 31 and 82 of the Bengal Agricultural Debtors Rules, 1936, the Governor in Council is pleased to appoint the Subdivisional Magistrate of Dakshin Shabazpur (Bhola), *ex-officio*, as Ordinary Appellate Officer and the senior munsif of Barisal, *ex-officio*, as Special Appellate Officer for each of the said local areas :—

Name of Debt Settlement Board.	Name of union comprising the local area.
Bapta	.. Bapta.
South Dighaldi	.. South Dighaldi.
Nyamatpur South	.. Nyamatpur South.
Kutba	.. Kutba.
Lalmohon	.. Lalmohon.

Bakarganj.—No. 10133L.R.—14th July 1936.—In exercise of the power conferred by sub-section (*1*) of section 3 of the Bengal Agricultural Debtors Act, 1935 (Bengal Act VII of 1936), the Governor in Council is pleased to establish the undermentioned Debt Settlement Boards in the Pirojpur subdivision of the Bakarganj district for the local areas respectively shown against each.

In exercise of the power conferred by sub-section (*1*) of section 40 of the said Act read with rules 31 and 82 of the Bengal Agricultural Debtors Rules, 1936, the Governor in Council is pleased to appoint the Subdivisional Magistrate of Pirojpur, *ex-officio*, as Ordinary Appellate Officer and the senior munsif of Barisal, *ex-officio*, as Special Appellate Officer for each of the said local areas :—

Name of Debt Settlement Board.	Name of union comprising the local area.
Samudaykati	.. Samudaykati.
Chirapara-Parsaturia	.. Chirapara-Parsaturia.
Bhandaria	.. Bhandaria.
Matbaria	.. Matbaria.

Bakarganj.—No. 10134L.R.—14th July 1936.—In exercise of the power conferred by sub-section (*1*) of section 3 of the Bengal Agricultural Debtors Act, 1935 (Bengal Act VII of 1936), the Governor in Council is pleased to establish the undermentioned Debt Settlement Boards in the Patuakhali subdivision of the Bakarganj district for the local areas respectively shown against each.

In exercise of the power conferred by sub-section (*1*) of section 40 of the said Act read with rules 31 and 82 of the Bengal Agricultural Debtors Rules, 1936, the Governor in Council is pleased to appoint the Subdivisional Magistrate of Patuakhali, *ex-officio*, as Ordinary Appellate Officer and the senior

munsif of Barisal, *ex-officio*, as Special Appellate Officer for each of the said local areas :—

Name of Debt Settlement Board.	Name of union comprising the local area.
Kalikapur	Kalikapur.
Baufal	Baufal.
Golachipa	Golachipa.
Betagi	Betagi.
Barguna	Barguna.
Subidkhali-Deuli	Subidkhali-Deuli.
Amtali	Amtali.

Tippera.- No. 10135L.R.—14th July 1936.— In exercise of the power conferred by sub-section (*1*) of section 3 of the Bengal Agricultural Debtors Act, 1935 (Bengal Act VII of 1936), the Governor in Council is pleased to establish the undermentioned Debt Settlement Boards in the Sadar subdivision of the Tippera district for the local areas respectively shown against each.

In exercise of the power conferred by sub section (*1*) of section 40 of the said Act read with rules 31 and 82 of the Bengal Agricultural Debtors Rules, 1936, the Governor in Council is pleased to appoint the Subdivisional Magistrate of Sadar, *ex officio*, as Ordinary Appellate Officer and the senior munsif of Comilla, *ex officio*, as Special Appellate Officer for each of the said local areas :

Name of Debt Settlement Board.	Name of union comprising the local area.
Daudkandi	Daudkandi.
Gazaria	Gazaria.
Maruka	Maruka.
Homna	Homna.
Nabipur	Nabipur.
Dhamghar	Dhamghar.
Jafargunj	Jafargunj.
Jhalam	Jhalam.
Baishgaon	Baishgaon.
Mudafarganj	Mudafargunj.
Lakshmanpur	Lakshmanpur.
Uttarhowla	Uttarhowla.
Alkora	Alkora.
Doulkhar	Doulkhar.
Jodda	Jodda.
Kankapait	Kankapait.
Payalgacha.	Payalgacha.

Tippera.- No 10136L R 14th July 1936 In exercise of the power conferred by sub section (*1*) of section 3 of the Bengal Agricultural Debtors Act 1935 (Bengal Act VII of 1936), the Governor in Council is pleased to establish the undermentioned Debt Settlement Boards in the Brahmanbaria subdivision of the Tippera district for the local areas respectively shown against each

In exercise of the power conferred by sub section (*1*) of section 40 of the said Act read with rules 31 and 82 of the Bengal Agricultural Debtors Rules, 1936, the Governor in Council is pleased to appoint the Subdivisional Magistrate of Brahmanbaria *ex officio*, as Ordinary Appellate Officer and the Senior Munsif of Comilla, *ex officio*, as Special Appellate Officer for each of the said local areas :

Name of Debt Settlement Board.	Name of union comprising the local area.
Kasba	Kasba.

Tippera. No. 10137L R. 14th July 1936 In exercise of the power conferred by sub section (*1*) of section 3 of the Bengal Agricultural Debtors Act, 1935 (Bengal Act VII of 1936), the Governor in Council is pleased to establish the undermentioned Debt Settlement Boards in the Chandpur subdivision of the Tippera district for the local areas respectively shown against each.

In exercise of the power conferred by sub-section (*1*) of section 40 of the said Act read with rules 31 and 82 of the Bengal Agricultural Debtors Rules, 1936, the Governor in Council is pleased to appoint the Subdivisional Magistrate of Chandpur, *ex officio*, as Ordinary Appellate Officer and the senior munsif of Comilla, *exofficio*, as Special Appellate Officer for each of the said local areas :—

Name of Debt Settlement Board.	Name of union comprising the local area.
Sachar	.. Pathair.
Palakhal	.. Shahadebpur.
Kachua	.. Kachua.
Kadla	.. Kadla.
Karaiya	.. Karaiya.
Gohat	.. Gohat.
Asrabpur	.. Asrabpur.
Baluthupa	.. Baluthupa.
Subidpur	.. Subidpur.
Khajuria	.. Gupti.
Paikpara	.. Paikpara.
Gobindapur	.. Gobindapur.
Rupsa	.. Rupsa.
Rajargaon	.. Rajargaon.
Kalacho.	.. Kalacho.
Hajiganj	Hajiganj.
Barkul	.. Barkul.
Belghar	Hatila.
Tamta	Tamta
Gandharbapur	Gandharbapur.
Suchipara	Suchipara.
Meher	Meher.
Raisree	.. Raisree.
Chitoshi	. Chitoshi.
Bagrabazar	. Balia.
Hanarchar	Hanarchar.
Ibrahimpur	Ibrahimpur.
Gazipur	.. Gazipur.
Rampur	.. Rampur.
Himechar	.. Char Hime.
Baburhat	.. Ashikati.
Baharia Bazar	.. Sakhua.
Mohanpur	.. Mohanpur.
Beltali	.. Sadullapur.
Nayergaon	.. Nayergaon.
Matlab	.. Matlab.

Howrah.—No. 10138L.R.—14th July 1936.—In exercise of the power conferred by sub-section (*1*) of section 3 of the Bengal Agricultural Debtors Act, 1935 (Bengal Act VII of 1936), the Governor in Council is pleased to establish the undermentioned Debt Settlement Boards in the Sadar subdivision of the Howrah district for the local areas respectively shown against each.

In exercise of the power conferred by sub-section (*1*) of section 40 of the said Act read with rules 31 and 82 of the Bengal Agricultural Debtors Rules, 1936, the Governor in Council is pleased to appoint the Subdivisional Magistrate of Sadar, *ex officio*, as Ordinary Appellate Officer and the senior munsif of Howrah, *ex officio*, as Special Appellate Officer for each of the said local areas :—

Name of Debt Settlement Board.	Name of union comprising the local area.
Domjur	.. Domjur.
Mahiari	.. Mahiari.
Makardah	. Makardah.

Howrah.—No. 10139L.R.—14th July 1936 –In exercise of the power conferred by sub-section (*1*) of section 3 of the Bengal Agricultural Debtors Act, 1935 (Bengal Act VII of 1936), the Governor in Council is pleased to establish the undermentioned Debt Settlement Boards in the Uluberia subdivision of the Howrah district for the local areas respectively shown against each.

In exercise of the power conferred by sub-section (*1*) of section 40 of the said Act read with rules 31 and 82 of the Bengal Agricultural Debtors Rules, 1936, the Governor in Council is pleased to appoint the Subdivisional Magistrate of Uluberia, *ex officio*, as Ordinary Appellate Officer and the senior munsif of Howrah, *ex officio*, as Special Appellate Officer for each of the said local areas :

Name of Debt Settlement Board.	Name of union comprising the local area.
Benapur	.. Benapur.
Shyampur	Shyampur.
Nakol	. Nakol.
Bagnan	.. Bagnan.
Harishpur	.. Harishpur.
Khosalpur	.. Khosalpur.
Tajpur	.. Tajpur.
Tulsibaria	. Tulsibaria.
Udong	.. Udong.

Dacca. No 10140L.R. 14th July 1936. In exercise of the power conferred by sub section (*1*) of section 3 of the Bengal Agricultural Debtors Act, 1935 (Bengal Act VII of 1936), the Governor in Council is pleased to establish the undermentioned Debt Settlement Boards in the Sadar subdivision of the Dacca district for the local areas respectively shown against each.

In exercise of the power conferred by sub-section (*1*) of section 40 of the said Act read with rules 31 and 82 of the Bengal Agricultural Debtors Rules, 1936, the Governor in Council is pleased to appoint the Subdivisional Magistrate of Sadar, *ex officio*, as Ordinary Appellate Officer and the senior munsif of Dacca, *ex officio*, as Special Appellate Officer for each of the said local areas :

Name of Debt Settlement Board.	Name of union comprising the local area.
Kaliganj	.. Kaliganj.
Toke	.. Toke.
Kapasia	.. Kapasia.
Balia	.. Balia.
Tetuljhora	.. Tetuljhora.
Kusura.	.. Kusura.
Joypara	.. Joypara.
Galimpur	.. Galimpur.
Konda	.. Konda.

Dacca. No. 10141L.R. 14th July 1936. In exercise of the power conferred by sub-section (*1*) of section 3 of the Bengal Agricultural Debtors Act, 1935 (Bengal Act VII of 1936), the Governor in Council is pleased to establish the undermentioned Debt Settlement Boards in the Manikganj subdivision of the Dacca district for the local areas respectively shown against each.

In exercise of the power conferred by sub-section (*1*) of section 40 of the said Act read with rules 31 and 82 of the Bengal Agricultural Debtors Rules, 1936, the Governor in Council is pleased to appoint the Subdivisional Magistrate of Manikganj, *ex officio*, as Ordinary Appellate Officer and the senior munsif of Dacca, *ex officio* as Special Appellate Officer for each of the said local areas :

Name of Debt Settlement Board.	Name of union comprising the local area.
Krishnapura and Atigram	.. Krishnapura and Atigram.
Baliati Saturia	. Baliati Saturia.
Dighi and Jaigir	.. Dighi and Jaigir.
Paril-Boldhera	.. Boldhera, Jamsha and Singair.
Gala	.. Gala.
Balora	.. Balora.
Sibalaya	.. Sibalaya.

Dacca.—No. 10142L.R.—14th July 1936.—In exercise of the power conferred by sub-section (*1*) of section 3 of the Bengal Agricultural Debtors Act, 1935 (Bengal Act VII of 1936), the Governor in Council is pleased to establish the undermentioned Debt Settlement Boards in the Narayanganj subdivision of the Dacca district for the local areas respectively shown against each.

In exercise of the power conferred by sub-section (*1*) of section 40 of the said Act read with rules 31 and 82 of the Bengal Agricultural Debtors Rules, 1936, the Governor in Council is pleased to appoint the Subdivisional Magistrate of Narayanganj, *ex officio*, as Ordinary Appellate Officer and the senior munsif of Dacca, *ex officio*, as Special Appellate Officer for each of the said local areas :—

Name of Debt Settlement Board.	Name of union comprising the local area.
Bandar	.. Bandar.
Raipura	.. Raipura.
Fatulla	.. Fatulla.

Dacca. No. 10143L.R.—14th July 1936.—In exercise of the power conferred by sub-section (*1*) of section 3 of the Bengal Agricultural Debtors Act, 1935 (Bengal Act VII of 1936), the Governor in Council is pleased to establish the undermentioned Debt Settlement Boards in the Munshiganj subdivision of the Dacca district for the local areas respectively shown against each.

In exercise of the power conferred by sub-section (*1*) of section 40 of the said Act read with rules 31 and 82 of the Bengal Agricultural Debtors Rules, 1936, the Governor in Council is pleased to appoint the Subdivisional Magistrate of Munshiganj, *ex officio*, as Ordinary Appellate Officer and the senior munsif of Dacca, *ex officio*, as Special Appellate Officer for each of the said local areas :—

Name of Debt Settlement Board.	Name of union comprising the local area.
Mollakandi	.. Mollakandi.
Latabdi	.. Latabdi.
Kukutia	.. Kukutia.
Gaodia	.. Gaodia.

Jalpaiguri.—No. 10144L.R.—14th July 1936.—In exercise of the power conferred by sub-section (*1*) of section 3 of the Bengal Agricultural Debtors Act, 1935 (Bengal Act VII of 1936), the Governor in Council is pleased to establish the undermentioned Debt Settlement Boards in the Sadar subdivision of the Jalpaiguri district for the local areas respectively shown against each.

In exercise of the power conferred by sub-section (*1*) of section 40 of the said Act read with rules 31 and 82 of the Bengal Agricultural Debtors Rules, 1936, the Governor in Council is pleased to appoint the Subdivisional Magistrate of Sadar, *ex officio*, as Ordinary Appellate Officer and the munsif of Jalpaiguri, *ex officio*, as Special Appellate Officer for each of the said local areas :—

Name of Debt Settlement Board.	Name of union comprising the local area.
Tetulia	.. Tetulia.
Sannyasikata	.. Sannyasikata.
Shikarpur	.. Shikarpur.
Pochagarh	.. Pochagarh.
Boda	.. Boda.
Debiganj	.. Debiganj.
Mainaguri	.. Mainaguri.
Dharampur	.. Dharampur.
Patgram	.. Patgram.

Jalpaiguri.—No. 10145L.R.—14th July 1936.—In exercise of the power conferred by sub-section (*1*) of section 3 of the Bengal Agricultural Debtors Act, 1935 (Bengal Act VII of 1936), the Governor in Council is pleased to establish the undermentioned Debt Settlement Boards in the Alipore subdivision of the Jalpaiguri district for the local areas respectively shown against each.

In exercise of the power conferred by sub-section (*1*) of section 40 of the said Act read with rules 31 and 82 of the Bengal Agricultural Debtors Rules, 1936, the Governor in Council is pleased to appoint the Subdivisional Magistrate of

Alipur, *ex officio*, as Ordinary Appellate Officer and the munsif of Jalpaiguri, *ex-officio*, as Special Appellate Officer for each of the said local areas :—

Name of Debt Settlement Board.	Names of mauzas comprising the local area, with jurisdiction list number of each mauza.	
Silbarihat ..	Sirubari ..	55
	Jogendranagar ..	56
	Mejbil ..	57
	Paschim Kanthalbari ..	58
	Purba Kanthalbari ..	59
	Silbarihat ..	60
	Patlakhawa ..	61
	Paschim Simlabari ..	62
	Purba Simlabari ..	64
	Par-Patlakhawa ..	233
Samuktola ..	Joypur ..	146
	Purba Jitpur ..	145
	Kadampui ..	149
	Samuktola ..	151
	Patotola ..	150
	Garokhuta ..	142
	Baniadabri ..	144
	Bainagaon ..	147
	Pukhuria ..	148
	Sambalpur ..	143
Falakata ..	Balasundar ..	92
	Joychandpur ..	93
	Bhutnirghat ..	94
	Barodoba ..	95
	Kairkata ..	85
	Harinathpur ..	83
	Baganbari ..	84
	Baltali-Bhandani ..	82
	Parangerpar ..	97
	Chuakhola ..	98
	Jogendrapur ..	99
	Kunjanagar ..	110
	Banshidharpur ..	113
	Dakshin-Parangerpar ..	111
	Raichenga ..	114
	Kalipur ..	115
	Falakata ..	96
Khairbari ..	Uttar Rangalibazna ..	35
	Madhya Rangalibazna ..	36
	Dakshin Khairbari ..	24
	Umacharanpur ..	104
	Khawchangpara ..	105
	Purba Madarihat ..	20
	Dakshin Madarihat ..	21
	Paschim Madarihat ..	22
	Madhya Madarihat ..	19
	Uttar Madarihat ..	18
	Purba Khairbari ..	17
	Uttar Khairbari ..	16
	Madhya Khairbari ..	29
	Uttar Chhekamari ..	28
	Madhya Chhekamari ..	27
	Paschim Khairbari ..	26
	Islamabad ..	25
Kumargram ..	Haldibari ..	108
	Kumargram ..	103
	Chengmari ..	101
	Daldali ..	100
	Pukhurigaon ..	107
	Paglarhat ..	102
	Marakhata ..	96
Barobisha ..	Narathali ..	97
	Kamakshyaguri ..	98
	Barobisha ..	110
	Bhalka ..	111
	Chakchaka ..	99
	Majerdabri East ..	112

Rangpur. No. 10558 L.R.—23rd July 1936.—In exercise of the power conferred by sub-section (*3*) of section 158A of the Bengal Tenancy Act, 1885 (VIII of 1885), the Governor in Council is pleased to appoint, for the purpose of that section, Babu Kshirode Prasad Barua, Sub-Deputy Collector, Rangpur, to perform the functions of a Certificate Officer under the Public Demands Recovery Act, 1913, for the recovery of arrears of rent (including cesses) due to the estates of Rai Radha Raman Majumdar Bahadur, Babu Kamala Ranjan Roy and Babu Ramesh Chandra Ghosh and others, in the district of Rangpur.

Dacca.—No. 10601L.R.—24th July 1936.—In exercise of the power conferred by sub-section (*3*) of section 158A of the Bengal Tenancy Act, 1885 (Act VIII of 1885), the Governor in Council is pleased to appoint for the purpose of that section, the Certificate Officer of Dacca, Sadar, to perform the functions of a Certificate Officer under the Bengal Public Demands Recovery Act, 1913 (Bengal Act III of 1913), for the recovery of arrears of rent (including cesses) due to the estate of Srimati Monorama Debi Chowdhurani, of Suapur, Dacca, situated in the district of Dacca.

Khulna.—No. 10605L.R.—24th July 1936.—Under section 3 of the Bengal Survey Act, 1875 (V of 1875) the Governor in Council is pleased to order that a survey shall be made of all lands which are comprised in the Government estates mentioned below of the Khulna Collectorate and the boundaries of the estates, tenures, mauzas and fields be demarcated on the lands so to be surveyed:—

List of Government estates.

Serial No.	Name of estate.	Number of estate.
1.	Kharija Taluk Talaigachha ...	62
2.	Kharija Taluk Parsalua ...	168
3.	Zamindari Saprajpur ...	181
4.	Kharija Taluk Nikalapur ...	438
5.	Kharija Taluk Baksha ...	475
6.	Dayemi Taluk Mailmara ...	609
7.	Bajeapti Taluk Jugipukuria ...	636
8.	Bajeapti Taluk Nakila ...	698
9.	Kharija Taluk Kismat Shotal and others ...	706
10.	Kharija Taluk Shotal Kismat	708
11.	Mahal Haburia Khola ...	769
12.	Nalinikanta ...	1235
13.	Nitambini ...	1236
14.	Purna ...	1237
15.	Gopalak ...	1238
16.	Bhabaranjan ..	1239
17.	Radhacharan ..	1240
18.	Gopallal ...	1242
19.	Surendra ...	1243
20.	Radhacharan ...	1244

Khulna.—No. 10606L.R.—24th July 1936.—In exercise of the powers conferred by section 101 (*2*) (*d*) of the Bengal Tenancy Act, 1885 (Act VIII of 1885), the Governor in Council is pleased to order that a survey shall be made and a record-of-rights prepared in respect of all lands which are comprised in the following Government estates of the Khulna Collectorate:—

List of Government estates.

Serial No.	Name of estate.	Number of estate.
1.	Kharija Taluk Talaigachha ...	62
2.	Kharija Taluk Parsalua ...	168
3.	Zamindari Saprajpur ...	181
4.	Kharija Taluk Nikalapur ...	438
5.	Kharija Taluk Baksha ...	475
6.	Dayemi Taluk Mailmara	609
7.	Bajeapti Taluk Jugipukuria ...	636
8.	Bajeapti Taluk Nakila ...	698
9.	Kharija Taluk Kismat Shotal and others ..	706
10.	Kharija Taluk Shotal Kismat	708
11.	Mahal Haburia Khola ...	769
12.	Nalinikanta ...	1235
13.	Nitambini ...	1236
14.	Purna ...	1237
15.	Gopalak ...	1238
16.	Bhabaranjan ...	1239
17.	Radhacharan ...	1240
18.	Gopallal	1242
19.	Surendra ...	1243
20.	Radhacharan ...	1244

The particulars to be recorded in the record-of-rights shall be the following:—

(*a*) the name of each tenant or occupant;

(*b*) the class or classes to which each tenant belongs, that is to say, whether he is a tenure-holder, raiyat holding at fixed rates, settled raiyat, occupancy raiyat, non-occupancy raiyat, or under-raiyat, with or without a right of occupancy, and if he is a tenure-holder, whether he is a permanent tenure-holder or not, and whether his rent is liable to enhancement during the continuance of his tenure;

(*c*) the situation and quantity of the land held by each tenant or occupier;

(*d*) the name of each tenant's landlord;

(*e*) the rent and cess lawfully payable by each tenant at the time the record-of-rights is being prepared;

(*f*) the amount payable in respect of any rights of pasturage, forest rights, rights over fisheries and the like at the time the record-of-rights is being prepared, the condition and incidence appertaining to such rights, and if the amount is a gradually increasing amount, the time at which, and the increments by which, it increases;

(*g*) the mode in which that rent has been fixed, whether by contract, by order of a court, or otherwise;

(*h*) if the rent is a gradually increasing rent, the time at which and the steps by which it increases;

(*i*) the rights and obligations of each tenant and landlord in respect of—

(*i*) the use by tenants of water for agricultural purposes, whether obtained from a river, jhil, tank or well or any other source of supply, and

(*ii*) the repair and maintenance of appliances for securing a supply of water for the cultivation of the land held by each tenant, whether or not such appliances be situated within the boundaries of such land;

(*j*) the special conditions and incidence, if any, of the tenancy;

(*k*) any right-of-way or other easement attaching to the land for which a record-of-rights is being prepared;

(*l*) if the land is claimed to be held rent free, whether or not rent is actually paid and if not paid, whether or not the occupant is entitled to hold the land without payment of rent, and, if so entitled, under what authority:

Provided that if lands are not used for purposes connected with agriculture or horticulture, it shall be sufficient to record that fact together with the prescribed particulars relating to the occupant, the landlord and the tenancy.

Rangpur.- No. 10674L.R. 25th July 1936. Babu Hemanga Lal Das Gupta, Sub-Deputy Collector and Assistant Settlement Officer in charge, Malda, on leave, is, in the interest of public service, appointed to be an Assistant Settlement Officer in the district of Rangpur, with effect from the date on which he joins his settlement duties in that district.

Rangpur.- No. 10675L.R.—25th July 1936.—Under the provisions of section 3 (*14*) of the Bengal Tenancy Act, 1885 (Act VIII of 1885), Babu Hemanga Lal Das Gupta, Sub-Deputy Collector, is authorised to discharge, in the district of Rangpur, the functions of a Revenue Officer, under Chapter X of that Act, so far as they relate to surveys and the preparation of record-of-rights.

He is also vested with the powers of an Assistant Settlement Officer, under Chapter VII, Part I, of the rules under the Bengal Tenancy Act, in respect of the aforesaid area

Bogra. No. 10687L.R.- 25th July 1936.— Under section 3 of the Bengal Survey Act (V of 1875), the Governor in Council is pleased to order that a survey shall be made of all lands which are comprised in the Govenment and temporarily-settled private estates mentioned below of the Bogra Collectorate, and that the boundaries of the estates, tenures, mauzas and fields be demarcated on the lands so to be surveyed :-

Government estates.

Serial No.	No. of estates.	Name of estate.
1	25 S. A.	Kanan Amodbala.
2	656	Joypur Government Estate.
3	657	Ditto.
4	866	Deara Mahal Kishari Lal Singha Choudhuri and others.
5	Settlement plots 1413 and 1420.	Railway " B " class land at mauza Pabna-Bogra.
6	825	Jamthal Madargonj.
7	826	Bera Panchberia.

Temporarily-settled private estates.

1	846	Deara Mahal Krishna Chandra Bhoumik and others.
2	833	Anchlai, pargana Prataplajoo.
3	851	Khanpur, pargana Mehamsahi.
4	832	Deara Mahal Sumara Giri Gossami and another.
5	834	Ditto.
6	837	Deara Mahal Raja Promode Nath Roy.
7	838	Ditto.
8	839	Deara Mahal Rai Kshitish Bhusan Roy Bahadur.
9	840	Deara Mahal Krishna Kamini Choudhurani and another.
10	841	Deara Mahal Rai Kshitish Bhusan Roy Bahadur and another.
11	843	Deara Mahal Kumar Bimalendu Nath Roy.
12	844	Deara Mahal Md. Haider Ali Khan Pani and others.
13	845	Deara Mahal Mahendra Ranjan Roy and another.
14	847	Deara Mahal Pyari Mohan Goswami.
15	848	Deara Mahal Susil Chandra Roy Chowdhury and another.
16	849	Ditto.
17	850	Deara Mahal Amritalal Singh Chowdhury and others.
18	852	Deara Mahal Rai Kshitish Bhusan Roy Bahadur and others.
19	853	Ditto.
20	854	Ditto.
21	855	Ditto.
22	856	Deara Mahal Satyendra Prasanna Basu Majumdar and others.
23	857	Deara Mahal Rai Kshitish Bhusan Roy Bahadur.
24	858	Deara Mahal Promotha Nath Munshi and others.
25	860	Deara Mahal Rai Kshitish Bhusan Roy Bahadur and others.
26	862	Ditto.
27	863	Deara Mahal Gopal Chandra Saha and others.

Serial No.	No. of estates.	Name of estates.
28	864	Deara Mahal Susil Chandra Roy Chowdhury and others.
29	865	Deara Mahal Jaladhar Ray and others
30	867	Deara Mahal Amritalal Singh Chowdhury and others.
31	868	Ditto.
32	869	Ditto.
33	870	Deara Mahal Rai Kshitish Bhusan Roy Bahadur and others.
34	827	Talora.
35	828	Sabla.
36	842	Deara Mahal Maharaja Sir Manindra Chandra Nandy Bahadur.
37	836	Deara Mahal Kumud Nath Choudhury.
38	872	Deara Mahal Mukunda Narayan Munshi and others.
39	875	Deara Mahal Jnanada Prosad Sukul and others.
40	876	Deara Mahal Promotha Nath Munshi and others.
41	877	Deara Mahal Satchidananda Mahanta Tagore and others.
42	883	Deara Mahal Satyendra Nath Pal and others.
43	887	Deara Mahal Mohini Narayan Munshi and others.
44	890	Deara Mahal Khetra Nath Pal and others.

Bogra.—No. 10688L.R.—25th July 1936.—In exercise of the powers conferred by section 101(*2*) (*d*) of the Bengal Tenancy Act (Act VIII of 1885), the Governor in Council is pleased to order that a survey shall be made and a record-of-rights prepared in respect of all lands which are comprised in the following Government estates of the Bogra Collectorate :—

Government estates.

Serial No.	No. of estates.	Name of estate.
1	25 S. A.	Kanan Amodbala.
2	656	Joypur Government Estate.
3	657	Ditto.
4	866	Deara Mahal Kishari Lal Singh Choudhuri and others.
5	Settlement plots 1413 and 1420.	Railway " B " class land at mauza Pabna-Bogra.
6	825	Jamthal Madargonj.
7	826	Bera Panchberia.

The particulars to be recorded in the record-of-rights shall be the following :—

(*a*) the name of each tenant or occupant ;

(*b*) the class or classes to which each tenant belongs, that is to say, whether he is a tenure-holder, raiyat holding at fixed rates, settled raiyat, occupancy raiyat, non-occupancy raiyat or under-raiyat, with or without a right of occupancy, and if he is a tenure-holder, whether he is a permanent tenure-holder or not, and whether his rent is liable to enhancement during the continuance of his tenure ;

(*c*) the situation and quantity of the land held by such tenant or occupier ;

(*d*) the name of each tenant's landlord ;

(*e*) the rent and cess lawfully payable by each tenant at the time the record-of-rights is being prepared ;

(*f*) the amount payable in respect of any rights of pasturage, forest rights, rights over fisheries and the like at the time the record-of-rights is being prepared, the conditions and incidents appertaining to such rights, and if the amount is a gradually increasing amount, the time at which and the increments by which it increases ;

(*g*) the mode in which that rent has been fixed, whether by contract, by order of a Court or otherwise ;

(*h*) if the rent is a gradually increasing rent, the time at which and the steps by which it increases;

(*i*) the rights and obligations of each tenant and landlord in respect of—

(*i*) the use by tenants of water for agricultural purposes, whether obtained from the river, jhil, tank or well or any other source of supply, and

(*ii*) the repair and maintenance of appliances for securing a supply of water for the cultivation of the land held by each tenant, whether or not such appliances be situated within the boundaries of such land ;

(*j*) the special conditions and incidents, if any, of the tenancy ;

(*k*) Any right-of-way or other easement attaching to the land for which a record-of-rights is being prepared,

(*l*) if the land is claimed to be held rent-free, whether or not rent is actually paid, and if not paid, whether or not the occupant is entitled to hold the land without payment of rent, and if so entitled, under what authority :

Provided that if lands are not used for purposes connnected with agriculture or horticulture, it shall be sufficient to record that fact together with the prescribed particulars relating to the occupant, the landlord and the tenancy.

Bogra.—No. 10689L R.—25th July 1936.—In exercise of the powers conferred by section 101 (*2*) (*d*) of the Bengal Tenancy Act (Act VIII of 1885), the Governor in Council is pleased to order that a survey shall be made and a record-of-rights prepared in respect of all lands which are comprised in the following temporarily-settled private estates of the Bogra Collectorate :—

Temporarily-settled private estates.

Serial No.	No. of estates.	Name of estate.
1	846	Deara Mahal Krishna Chandra Bhoumik and others.
2	833	Anchlai, pargana Prataphajoo.
3	851	Khanpur, pargana Mehamsahi.

Serial No.	No. of estates.	Name of estates.
4	832	Deara Mahal Sumara Giri Gossami and another.
5	834	Ditto.
6	837	Deara Mahal Raja Promode Nath Roy.
7	838	Ditto.
8	839	Deara Mahal Rai Kshitish Bhusan Roy Bahadur.
9	840	Deara Mahal Krishna Kamini Choudhurani and another.
10	841	Deara Mahal Rai Kshitish Bhusan Roy Bahadur and another.
11	843	Deara Mahal Kumar Bimalendu Nath Roy.
12	844	Deara Mahal Md. Ha'der Ali Khan Pani and others.
13	845	Deara Mahal Mahendra Ranjan Roy and another
14	847	Deara Mahal Pyari Mohan Goswami.
15	848	Deara Mahal Susil Chandra Roy Chowdhury and another.
16	849	Ditto.
17	850	Deara Mahal Amritalal Singh Chowdhury and others.
18	852	Deara Mahal Rai Kshitish Bhusan Roy Bahadur and others.
19	853	Ditto.
20	854	Ditto.
21	855	Ditto.
22	856	Deara Mahal Satyendra Prasanna Basu Majumdar and others.
23	857	Deara Mahal Rai Kshitish Bhusan Roy Bahadur.
24	858	Deara Mahal Promotha Nath Munshi and others.
25	860	Deara Mahal Rai Kshitish Bhusan Roy Bahadur and others.
26	862	Ditto.
27	863	Deara Mahal Gopal Chandra Saha and others.
28	864	Deara Mahal Susil Chandra Roy Chowdhury and others.
29	865	Deara Mahal Jaladhar Ray and others
30	867	Deara Mahal Amritalal Singh Chodhury and others
31	868	Ditto.
32	869	Ditto.
33	870	Deara Mahal Rai Kshitish Bhusan Roy Bahadur and others.
34	827	Talora
35	828	Sabla.
36	842	Deara Mahal Maharaja Sir Manindra Chandra Nandy Bahadur.
37	836	Deara Mahal Kumud Nath Chowdhury.
38	872	Deara Mahal Mukunda Narayan Munshi and others.
39	875	Deara Mahal Jnanada Prosad Sukul and others
40	876	Deara Mahal Promotha Nath Munshi and others.
41	877	Deara Mahal Satchidananda Mahanta Tagore and others.
42	883	Deara Mahal Satyendra Nath Pal and others.
43	887	Deara Mahal Mohini Narayan Munshi and others.
44	890	Deara Mahal Khetra Nath Pal and others.

The particulars to be recorded in the record-of-rights shall be the following :-

(*a*) the name of each tenant or occupant ;

(*b*) the class or classes to which each tenant belongs, that is to say, whether he is a tenure-holder, raiyat holding at fixed rate, settled raiyat, occupancy raiyat, non-occupancy raiyat or under-raiyat, with or without a right of occupancy, and if he is a tenure-holder, whether he is a permanent tenure-holder or not, and whether his rent is liable to enhancement during the continuance of his tenure;

(*c*) the situation and quantity of the land held by each tenant or occupier ;

(*d*) the name of each tenant's landlord ;

(*e*) the name of each proprietor in the local area or estate with the character and extent of his interest and the situation and quantity of the lands, if any, which are his private lands as defined in Chapter XI of the Act ;

(*f*) the rent and cess lawfully payable by each tenant at the time the record-of-rights is being prepared ;

(*g*) the amount payable in respect of any rights of pasturage, forest rights, rights over fisheries and the like at the time the record-of rights is being prepared, the conditions and incidents appertaining to such rights, and if the amount is a gradually increasing amount, the time at which and the increments by which it increases ;

(*h*) the mode in which that rent has been fixed, whether by contract, by order of a Court or otherwise ;

(*i*) if the rent is a gradually increasing rent the time at which and the steps by which it increases ;

(*j*) the rights and obligations of each landlord and tenant in respect of

(*i*) the use by tenants of water for agricultural purposes, whether obtained from a river, jhil, tank or well or any other source of supply, and

(*ii*) the repair and maintenance of appliances for securing a supply of water for the cultivation of the land held by each tenant, whether or not such appliances be situated within the boundaries of such land;

(*k*) the special conditions and incidents, if any, of the tenancy ,

(*l*) any right of way or other easement attaching to the land for which a record-of rights is being prepared ;

(*m*) if the land is claimed to be held rent-free, whether or not rent is actually paid, and if not paid, whether or not the occupant is entitled to hold the land without payment of rent and if so entitled under what authority :

Provided that it lands are not used for purposes connected with agriculture or horticulture, it shall be sufficient to record that fact together with the prescribed particulars relating to the occupant, the landlord and the tenancy.

24-Parganas.—No. 10692L R.—25th July 1936. —Under the provisions of section 3(*14*) of the Bengal Tenancy Act, 1885 (Act VIII of 1885), Babu Jajneswar Mazumdar, Settlement Kanungo, is authorised to discharge, in the district of 24-Parganas, the functions of a Revenue Officer, under Chapter X of that Act, so far as they relate to surveys and the preparation of record-of-rights.

24-Parganas. No. 10693L.R.—25th July 1936. In exercise of the powers conferred by section 3 of the Bengal Land Revenue Settlement Regulation, 1825 (IX of 1825), read with section 20 of the Bengal Land Revenue Settlement Regulation, 1822 (VII of 1822), the Governor in Council is pleased to vest Babu Jajneswar Mazumdar, Settlement Kanungo, who has, by notification No. 9623C.P., dated the 13th July 1936, been vested by the Board of Revenue with the powers of a Collector in the estate of Babu Kali Charan Nag Choudhury of Arbelia in the district of 24-Parganas, for the purpose of the work of maintenance of the record-of-rights of that estate, with powers under section 19 of the said Bengal Land Revenue Settlement Regulation, 1822, within the local limits of that estate, to require and compel persons mentioned in the section to attend and produce accounts and other papers and to examine such persons under that section for the purpose of the work of the maintenance of the record-of-rights.

Land Acquisition.

NOTIFICATIONS.

Dacca.—No. 10608L.A.—24th July 1936. —The Governor in Council is pleased to cancel the notification No. 2808L.A., dated the 3rd March 1934, under section 4 of the Land Acquisition Act, I of 1894, published at page 408, Part I of the *Calcutta Gazette* of the 8th idem, in respect of the proposed acquisition of 1·629 acres of land required for spur work at Zanjira and closing the side khal in the village of Char Baktabali, parganas Khijirpur and Tappa Gopalpur, district Dacca.

Hooghly.—No. 10611L.A.—24th July 1936. —Whereas it appears to the Governor in Council that land is likely to be required to be taken by Government at the expense of the Serampore Municipality for a public purpose, viz., for elevated reservoir No. 4, in the village of Ballavpore, jurisdiction list No. 14, thana Serampore, pargana Boro, district Hooghly, it is hereby notified that for the above purpose a piece of land comprising portions of cadastral plot Nos. 674, 672, 660, 661, 671, 670, 667, 669 and whole of plot No. 673, and measuring, more or less, 0·109 of an acre, is likely to be required within the aforesaid village of Ballavpore.

This notification is made, under the provisions of section 4 of Act I of 1894, to all whom it may concern.

A plan of the land may be inspected in the office of the Land Acquisition Collector, Serampore.

In exercise of the powers conferred by the aforesaid section, the Governor in Council is pleased to authorise the officers for the time being engaged in the undertaking, with their servants and workmen, to enter upon and survey the land and do all other acts required or permitted by that section.

Any person interested in the above land, who has any objection to the acquisition thereof, may, within thirty days after the date on which public notice of the substance of this notification is given in the locality, file an objection in writing before the Collector of Hooghly.

Hooghly.—No. 10614L.A. — 24th July 1936.—Whereas it appears to the Governor in Council that land is likely to be required to be taken by Government at the expense of the Bansberia Municipality for a public purpose, viz., for a park in the village of Bansberia, jurisdiction list No. 53, thana Magra, pargana Arsa, district Hooghly, it is hereby notified that for the above purpose a piece of land comprising cadastral plot Nos. 932 and 933, and measuring, more or less, 0·442 of an acre, is likely to be required within the aforesaid village of Bansberia.

This notification is made, under the provisions of section 4 of Act I of 1894, to all whom it may concern.

A plan of the land may be inspected in the office of the Collector of Hooghly.

In exercise of the powers conferred by the aforesaid section, the Governor in Council is pleased to authorise the officers for the time being engaged in the undertaking, with their servants and workmen, to enter upon and survey the land and do all other acts required or permitted by that section.

Any person interested in the above land, who has any objection to the acquisition thereof, may, within thirty days after the date on which public notice of the substance of this notification is given in the locality, file an objection in writing before the Collector of Hooghly.

Calcutta.—No. 10617L.A —24th July 1936. —In exercise of the powers conferred by section 48 (*1*) of the Land Acquisition Act, I of 1894, the Governor in Council is pleased to withdraw from the acquisition of a piece of land measuring, more or less, 5 chittaks 40 square feet of standard measurement, equivalent to ·0061 of an acre, being a portion of premises No. 78, Shambazar Street, and bounded as described below, which was included in the area notified for acquisition under declaration No. 10053L.A., dated the 4th September 1933, published at pages 1281-82, Part I of the *Calcutta Gazette* of the 7th idem, and required by the Calcutta Improvement Trust for Block No. 1 of Scheme

No. XXXVII (Chittaranjan Avenue to Shambazar) in Ward No. I of the Calcutta Municipality in the city of Calcutta—

Boundaries.

North—By the remaining portion of premises No. 78, Shambazar Street.

East—By premises No. 128, Cornwallis Street.

South—By Shambazar Street.

West—By sewered ditch.

Dacca.—No. 10620L.A.—24th July 1936.—The Governor in Council is pleased to cancel the notification No. 15406L.A., dated the 14th September 1935, under section 4 of the Land Acquisition Act, I of 1894, published at page 1784, Part I of the *Calcutta Gazette* of the 19th idem, in respect of the proposed acquisition of ·0206 of an acre of land required by the Dacca Municipality for sinking a tube-well and for construction of a pumping station at Lal Chand Makim's Lane, in Ward No. III, in the town of Dacca, pargana Jahangirnagar, district Dacca.

Dacca.—No. 10621L.A. 24th July 1936. Whereas it appears to the Governor in Council that land is likely to be required to be taken by Government at the expense of the Dacca Municipality for a public purpose, viz., for sinking a tube-well and for construction of a pumping station at Lal Chand Makim's Lane in the mahalla of Lal Chand Makim's Lane, Ward No. III, thana Sutrapur, in the town of Dacca, pargana Jahangirnagar, district Dacca, it is hereby notified that for the above purpose a piece of land comprising parts of cadastral survey plot Nos. 197, 195, 194 and 190, and measuring, more or less, ·0423 of an acre, is likely to be required within the aforesaid mahalla of Lal Chand Makim's Lane in the town of Dacca.

This notification is made, under the provisions of section 4 of Act I of 1894, to all whom it may concern.

A plan of the land may be inspected in the office of the Collector of Dacca.

In exercise of the powers conferred by the aforesaid section, the Governor in Council is pleased to authorise the officers for the time being engaged in the undertaking, with their servants and workmen, to enter upon and survey the land and do all other acts required or permitted by that section

Any person interested in the above land, who has any objection to the acquisition thereof, may, within thirty days after the date on which public notice of the substance of this notification is given in the locality, file an objection in writing before the Collector of Dacca.

Howrah.—No. 10624L.A.—24th July 1936. —Whereas it appears to the Governor in Council that land is likely to be required to be taken by Government at the expense of the Howrah Municipality for a public purpose, viz., for widening some portions of Prosonno Kumar Dutta Road and extending it up to Doyal Banarji Road in the village of Ramkrishnapur, jurisdiction list No. 7, thana Howrah, pargana Boro, district Howrah, it is hereby notified that for the above purpose four pieces of land altogether measuring, more or less, 0·141 of an acre, bounded on the—

Block I:

North and West—By lands of Dr. Nripendra Chandra Sinha,

South and East—By Prosonno Kumar Dutta Road.

Block II:

North and West By Prosonno Kumar Dutta Road,

South By lands of Piary Lal Khan, Tarak Sundari Dasi, Charu Bala Debi, Ashutosh Ghosh and Rampado Ghosh,

East By lands of Charu Chandra Dutta and others and Prosonno Kumar Dutta Road,

Block III:

North, West and East—By Prosonno Kumar Dutta Road,

South—By lands of Falamani and Radhamani Dasi,

Block IV:

North By lands and tanks of Kanai Lal Banerjee and others and land of Adhar and Upendra Nath Chatterjee and others,

South—Ditto and Prosonno Kumar Dutta Road,

East—By Prosonno Kumar Dutta Road,

West—By Doyal Banerji Road,

are likely to be required within the aforesaid village of Ramkrishnapur.

This notification is made, under the provisions of section 4 of Act I of 1894, to all whom it may concern.

A plan of the land may be inspected in the office of the Collector of Howrah.

In exercise of the powers conferred by the aforesaid section, the Governor in Council is pleased to authorise the officers for the time being engaged in the undertaking, with their servants and workmen, to enter upon and survey the land and do all other acts required or permitted by that section.

Any person interested in the above land, who has any objection to the acquisition thereof, may, within thirty days after the date on which public notice of the substance of this notification is given in the locality, file an objection in writing before the Collector of Howrah.

Faridpur.—No. 10627L.A.—24th July 1936.—Mr. W. H. Saumarez Smith, I.C.S., Subdivisional Officer, Madaripur, district Faridpur, is vested with the powers of a Collector under the Land Acquisition Act, I of 1894, in that subdivision.

Dacca.—No. 10668L.A.—25th July 1936.—In exercise of the powers conferred by section 48(*1*) of the Land Acquisition Act, I of 1894, the Governor in Council is pleased to withdraw from the acquisition of a piece of land measuring, more or less, 0·015 of an acre and comprising parts of cadastral survey plot Nos. 135 and 136 of mauza Mashdair, pargana Khijirpur, zilla Dacca, which was included in the area notified for acquisition under declaration No. 2152L.A., dated the 4th February 1935, published at page 315, Part I of the *Calcutta Gazette*, dated the 7th February 1935, and required by the Narainganj Municipality for building mehtars' line and gowkhana at Mashdair and Ishdair.

The area excluded has been included in the acquisition of land acquired for the improvement of the Dacca-Narainganj Road.

Murshidabad.—No. 10678L.A.—25th July 1936.—Whereas it appears to the Governor in Council that land is likely to be required to be taken by Government at the expense of the district board, Murshidabad, for a public purpose, viz., for easing a bend corner on the 2nd mile of Lalgola-Jasaitala Road in the village of Kalamegha, jurisdiction list No. 77, thana Lalgola, pargana Laskarpur, district Murshidabad, it is hereby notified that for the above purpose a piece of land comprising part of cadastral plot No. 93 and measuring, more or less, 0·08 of an acre, is likely to be required within the aforesaid village of Kalamegha.

This notification is made, under the provisions of section 4 of Act I of 1894, to all whom it may concern.

A plan of the land may be inspected in the office of the Subdivisional Officer, Lalbagh.

In exercise of the powers conferred by the aforesaid section, the Governor in Council is pleased to authorise the officers for the time being engaged in the undertaking, with their servants and workmen, to enter upon and survey the land and do all other acts required or permitted by that section.

Any person interested in the above land, who has any objection to the acquisition thereof, may, within thirty days after the date on which public notice of the substance of this notification is given in the locality, file an objection in writing before the Collector of Murshidabad.

Dacca.—No. 10681L.A.—25th July 1936.—Whereas it appears to the Governor in Council that land is likely to be required to be taken by Government at the expense of the Dacca Municipality for a public purpose, viz., for opening a methars' passage to the north of Baliati House at Mitford Road, in the mahalla of Bangsi Bazar, Ward No. 5, thana Kotwali, in the town of Dacca, pargana Jahangirnagar, district Dacca, it is hereby notified that for the above purpose a piece of land comprising parts of cadastral survey plot Nos. 23, 24 and 19, Sheet No. 36, and measuring, more or less, 0·0289 of an acre, is likely to be required within the aforesaid mahalla of Bangsi Bazar.

This notification is made under the provisions of section 4 of Act I of 1894, to all whom it may concern.

A plan of the land may be inspected in the office of the Collector of Dacca.

In exercise of the powers conferred by the aforesaid section, the Governor in Council is pleased to authorise the officers for the time being engaged in the undertaking, with their servants and workmen, to enter upon and survey the land and do all other acts required or permitted by that section.

Any person interested in the above land, who has any objection to the acquisition thereof, may, within thirty days after the date on which public notice of the substance of this notification is given in the locality, file an objection in writing before the Collector of Dacca.

Noakhali.—No. 10684L.A.—25th July 1936.—Whereas it appears to the Governor in Council that land is likely to be required to be taken by Government at the expense of the Banchhanagore union board for a public purpose, viz., for a village playground, in the village of Samserabad, jurisdiction list No. 75, thana Lakshmipur, zilla Noakhali, it is hereby notified that for the above purpose a piece of land measuring, more or less, 1·22 acres, comprising cadastral survey plot No. 1052, is likely to be required within the aforesaid village of Samserabad.

This notification is made, under the provisions of section 4 of Act I of 1894, to all whom it may concern.

A plan of the land may be inspected in the office of the Collector of Noakhali.

In exercise of the powers conferred by the aforesaid section, the Governor in Council is pleased to authorise the officers for the time being engaged in the undertaking, with their servants and workmen, to enter upon and survey the land and do all other acts required or permitted by that section.

In exercise of the powers conferred by section 17 (*4*) of the Land Acquisition Act, I of 1894, as amended by Act XXXVIII of 1923, the Governor in Council is pleased to direct that the provisions of section 5A of the Act shall not apply in this case.

DECLARATIONS.

Faridpur.—No. 10671L.A.—25th July 1936.—Where as it appears to the Governor in Council, that land is required to be taken by Government at the public expense for a public purpose, viz., for facility of local goods working at Ghewar Bazar, No. 6 Upperghat, of the Eastern Bengal Railway in the village of Daulatdia, jurisdiction list No. 240, in thana Goalundo, parganas Baikunthapur and Mamudpur, district Faridpur, it is hereby declared that for the above purpose a piece of land measuring, more or less, 3·799 acres, bounded on the—

North -By the land of Kasimaddi Sardar.

East— By the lands of Felu Sardar, Ali Bepari, Saber Tendal, Ekai Molla, Tamijaddi Shaik, Mafu Pramanik, Eakub Sardar, Kabil Mistry, Hosen Thakur, Habej Molla, Darbesh Shaik, Habej Molla, Abdul Samed Khandakar, Rai Charan Mandal, Julmat Fakir, Bhasan Sardar, Dabir Fakir, Rahamat Habej, Abbaj Fakir, Ahmmadali Molla, Nakul Molla, Maniraddi Mandal, Taher Mandal, Dabir Mandal, Baser Molla, Bahadur Molla, Dudu Molla, Sefatulla Molla, Samir Molla, Abdul Sardar, Sabdul Sardar, Kedai Molla, Faijaddi Kerani, Bhasan Bepari, Kaser Peada, Julmat Sardar, Hakimali Bepari, Jahardi Sardar, Mahammadi Bepari, Naimaddi Sardar, Munser Molla, Kadir Mridha, Durga Nath Singha, Jadav Chandra Sarkar, Abhay Charan Biswas, Deb Nath Saidal, Durga Charan Biswas, Manik Saidal, Asananda Sardar, Jagyeswar Biswas, Jharu Biswas, Ram Nath Sarkar, Ras Behari Saidal, Gaya Nath Saidal, Nakul Saidal, Najarali Mistry, Santo Biswas, Manik Saidal, Khalil Mistry, Jogyeswar Biswas, Debnath Saidal, Madhu Mistry, Loknath Biswas, Mokundo Sakhari, Mokundo Biswas and Debnath Saidal,

South —By the land of Deb Nath Saidal,

West—By the land of Eastern Bengal Railway

is required within the aforesaid village of Daulatdia.

This declaration is made, under the provisions of section 6 of Act I of 1894, to all whom it may concern.

A plan of the land may be inspected in the office of the Subdivisional Officer of Goalundo at Rajbari.

Burdwan—No. 10808L.A.—28th July 1936.—Whereas it appears to the Governor in Council that land is required to be taken by Government at the public expense for a public purpose, viz., for 11th mile of the Burdwan Arambag Road in the villages of Sehara and Mogalmari, jurisdiction list Nos. 55 and 59, respectively, thana Rayna, and in the village of Baragopinathpur, jurisdiction list No. 102, thana Khandaghosh, pargana Samarshahi, district Burdwan, it is hereby declared that for the above purpose five pieces of land comprising parts of cadastral survey plot Nos. 3047, 3048, 3052, 3053, 3082-3088, 3101-3103, 3108, 3141-3143, 3932-3936 and 3959-3962 in mauza Sehara, parts of cadastral survey plot Nos. 1-3, 8, 34-36, 41-46, 222, 224, 225, 229-233 and 247-250 in mauza Mogalmari and parts of cadastral survey plot Nos. 202 and 281 in mauza Baragopinathpur, and altogether measuring, more or less, 9·88 acres, are required within the aforesaid villages of Sehara, Mogalmari and Baragopinathpur.

This declaration is made, under the provisions of section 6 of Act I of 1894, to all whom it may concern.

A plan of the land may be inspected in the office of the Special Land Acquisition Officer, Burdwan, as well as in that of the Executive Engineer, Burdwan Division.

J. B. KINDERSLEY,
Secy. to the Govt of Bengal (offg.).

Excise.

Orders by the Commissioner of Excise and Salt, Bengal.

No. 24Exc.—24th July 1936.—Maulvi Syed Ahmad Rasul, Inspector of Excise and Salt, attached to the bonded laboratory of Messrs Smith Stanistreet and Co. in Calcutta, is transferred to the Union Distillery and Dr. Bose's Laboratory in the same district in the public interest.

No. 25Exc.—24th July 1936.—Babu Manmatha Nath Majumdar, temporary Inspector of Excise and Salt, attached to the Calcutta Match Works, Calcutta, is transferred to the bonded laboratory of Messrs. Smith Stanistreet and Co. in the district of Calcutta in the public interest.

No. 26Exc. — 24th July 1936. — Maulvi Abdus Sobhan, Inspector of Excise and Salt, now in charge of Nadia, is, on relief by Babu Dwijendra Nath Chatterji (No. I), posted to the Calcutta Match Works in the public interest.

A. S. LARKIN,
Commr. of Excise and Salt, Bengal (offg.).

IRRIGATION DEPARTMENT.

NOTIFICATION.

No. 11-I.—22nd July 1936.—In exercise of the powers conferred by section 3 of the Bengal Embankment Act, 1882 (Bengal Act II of 1882), the Governor in Council is pleased to appoint Mr. H. Banerjee, I.C.S., Additional District Magistrate, Chittagong, to perform the functions of a Collector under that Act in that district.

H. S. E. STEVENS,
Secy. to the Govt. of Bengal.

BOARD OF REVENUE, BENGAL.

NOTIFICATION.

Chittagong.—No. 10264Cess.—23rd July 1936. —In exercise of the power conferred by section 100 of the Cess Act, 1880 (Bengal Act IX of 1880), the Board is pleased to invest Mr. H. Banerjee, I.C.S., Additional District Magistrate, Chittagong, with the powers of a Collector under Part II of the said Cess Act, within the district of Chittagong.

S. BANERJEE,

Secy. to the Board of Revenue, Bengal.

TREASURY NOTICES.

Orders by the Deputy Accountant-General, Bengal.

The Treasury Buildings, the 24th July 1936.

It is notified that the refund order book No. 180 containing 50 orders "Pink" is in use by the Income Tax Office, Railways and Miscellaneous Salaries Circle, Calcutta, with effect from the 15th July 1936.

It is notified that the refund order book No. 6403 containing 50 orders is in use by the Income Tax Office, Central Salaries Circle, Calcutta, with effect from the 17th July 1936.

C. BHASKARAIYA,

Dy. Accountant-General, Bengal.

SHERIFF'S OFFICE.

The 9th July 1936.

Notice is hereby given that the Fourth Criminal Sessions of the year 1936 of the High Court of Judicature at Fort William in Bengal for the town of Calcutta and Factory of Fort William and the places subordinate thereto will be held at the Court House in the town of Calcutta, on Monday, the 3rd day of August next, at 11 o'clock in the forenoon, and thenceforward from day to day until the said sessions be over. And it is hereby proclaimed that all persons who are to prosecute any of the prisoners to be brought up for trial at the said sessions be present then and there to prosecute.

C. G. ARTHUR, *Sheriff.*

সরিফ আফিস, সন ১৯৩৬ সাল, তারিখ ৯ই জুলাই।

সকলকে সমাচার দেওয়া যাইতেছে যে, সুবে বাঙ্গালার ফোর্ট উইলিয়ম দুর্গের অধীন সহর কলিকাতার ও অন্যান্য স্থানের ফৌজদারী বিচার নিষ্পত্তি জন্য আগামী সন ১৯৩৬ সালের ৩রা আগষ্ট সোমবার বেলা ১১ ঘটিকার সময় এবং যে পর্য্যন্ত সেশিয়ানের কার্য্য সমাধা না হয়, প্রতিদিন উক্ত সময়ে কলিকাতার হাইকোর্টের আপন আদালত ঘরে সন ১৯৩৬ সালের চতুর্থ ক্রিমিনেল সেশিয়ান বসিবেক এবং এতদ্বারা প্রচার করা যাইতেছে যে, যে সকল ব্যক্তি কোন কয়েদীর বিরুদ্ধে ফৌজদারী মিছিল করিবেক, তাহারা উক্ত স্থানে উক্ত সময়ে হাজির থাকিয়া মোকদ্দমা করে। ইতি।

সি, জি, আর্থার,

সরিফ।

HIGH COURT NOTICES.

English Department—Civil.

The 23rd July 1936.

No. 16249A.—Maulvi Md. Abdus Samad, munsif under orders of transfer to Serajganj, in the district of Pabna and Bogra, is vested with the powers of a Judge of a Court of Small Causes for the trial of suits cognizable by such a Court up to the value of Rs. 50 within the local limits of the Serajganj munsifi.

Civil.

The 24th July 1936.

No. 16368A.—Babu Subodh Chandra Mukharji, munsif, under orders of transfer to Rampurhat in the district of Birbhum, is vested with the powers of a Judge of a Court of Small Causes for the trial of suits cognizable by such a Court up to the value of Rs. 50 within the local limits of the Rampurhat munsifi.

No. 16424A.—Babu Himansu Bikas Basu, munsif of Pirojpur, in the district of Bakarganj, is vested with the powers of a Judge of a Court of Small Causes for the trial of suits cognizable by such a Court up to the value of Rs. 50 within the local limits of the Pirojpur munsifi

By order of the High Court,

E. S. SIMPSON, *Registrar.*

ORDERS BY COMMISSIONERS OF DIVISIONS.

Burdwan Division—Chinsura.

No. 1226M.—21st July 1936.—It is hereby notified for general information that, under rule 20(*b*) of the rules for the management of charitable hospitals and dispensaries in Bengal, Maulvi Zaman Khan has been appointed to be a member of the committee for the management of the Raniganj Charitable Dispensary in the district of Burdwan, *vice* Maulvi Muhammad Yasin deemed to have vacated his seat under rule 22(*4*) of the manual of rules for the management of hospitals and dispensaries in Bengal.

No. 4481J.G.—23rd July 1936.—In accordance with the provisions of rule 63 (*2*) of Chapter IV of the Bengal Jail Code, Volume I, I hereby appoint Babu Baidya Nath Mukherji, B.L., to be a non-official visitor of the Bankura Sub-Jail in the district of Bankura for a period of two years, with effect from the 15th July 1936.

L. B. BURROWS, *Commissioner.*

Suri, the 23rd July 1936.

Erratum.—In the notification No. 49 L.S.-G., dated 10th July 1936, published in the *Calcutta Gazette*, dated the 23rd July 1936, on page 1779, Part I, *read* the name of the appointed member as "Babu Rakhal Chandra Pal" *instead of* "Babu Rakhal Chandra Das".

[ILLEGIBLE], for *District Magistrate.*

Orders by the Deputy Inspector-General of Police, Burdwan Range.

Chinsura.—No. 5904.—24th July 1936.—Babu Sharat Chandra Chakrabatti, Inspector, Burdwan, is granted 4 months' leave on average pay, on medical certificate, under rule 81(*b*)(*ii*) of the Fundamental Rules, in extension of the leave already granted to him.

Babu Harendra Nath Mallik, officiating Inspector, Burdwan, will continue to act as such in the above vacancy.

Babu Kiran Chandra Ghosh, Inspector, Burdwan, is granted 4 months' leave on half average pay, on medical certificate, in extension of the leave already granted to him.

Babu Kshitish Chandra Ghosh, officiating Inspector, Burdwan, will continue to act as such in the above vacancy.

J. M. MACKENZIE,

Deputy Inspector-General of Police (*offg.*).

Chittagong Division—Chittagong.

No. 3614G. — 22nd July 1936. — Babu Dwijendra Nath Chakrabatti, Sub-Deputy Collector, Tippera, is transferred to the headquarters station of the Noakhali district.

This cancels this office notification No. 2803G., dated the 13th June 1936, transferring Babu Ajit Kumar Basu, Sub-Deputy Collector, from Tippera to Noakhali.

The transfer is made in the public interest.

No. 3626G.—22nd July 1936.—This office notification No. 1953G., dated the 25th April 1936, sanctioning leave on average pay for twenty-one days to Babu Jogesh Chandra Chakrabarty, Sub-Deputy Collector and Khasmahal Officer, Noakhali, under rule 81 (*b*) (*ii*) of the Fundamental Rules with effect from the 9th May 1936, is hereby cancelled.

J. D. V. HODGE, *Commissioner* (*offg.*).

Comilla, the 21st July 1936.

No. 6936M.—It is hereby notified for general information that, under section 13 of the Bengal Village Self-Government Act, 1919 (Act V of 1919), read with section 6(*2*) and rule 35 of the rules for the election and appointment of members of union boards, Munshi Abdul Bari Pandit, son of late Jinnat Ali Munshi, of Jodda, has been elected as a member of the Jodda union board No. XV of Chouddagram police-station in the Sadar South subdivision of the district of Tippera, *vice* Aku Bhuiya, deceased.

J. P. RAY, *Addl. District Magistrate.*

Noakhali, the 21st July 1936.

No. 7330J.—It is notified for general information that, under section 13 of the Bengal Village Self-Government Act (Act V of 1919) read with rule 36 of the rules for election and appointment of members of union boards, Munshi Ali Azam Bhuyan of Bhaur Kut has been duly elected to be a member of Joyag union board within Begumganj police-station in the Sadar subdivision of the district of Noakhali, *vice* Baba Mia, deceased.

No. 7332J.—It is notified for general information that, under section 13 of the Bengal Village Self-Government Act (Act V of 1919) read with rule 35 of the rules for election and appointment of members of union boards, Babu Nabin Chandra Das of Nilakhi has been duly elected to be a member of Nilakhi union board No. 1 within Hatiya police-station in the Sadar subdivision of the district of Noakhali, *vice* Babu Uma Charan Saha, deceased.

Noakhali, the 23rd July 1936.

No. 7652J.—As the term of the managing committee of the Noakhali R K. Zilla School expired on the 11th April 1936, the committee with its office-bearers reconstituted with the following members in accordance with rule 1 of Government's order No. 1123Edn., dated 23rd August 1918 :—

The District Magistrate—President.

The Head Master—Vice-President and Secretary.

The Subdivisional Officer, Sadar—An official other than an inspecting officer of the Education Department.

Babu Kali Brahma Mukherji and Khan Bahadur Maulvi Ghazi Choudhury—Representatives of the parents and guardians of the pupils.

Babu Suresh Chandra Ganguly, Assistant Head Master—Elected representative of the teaching staff.

Noakhali, the 24th July 1936.

No. 7714J.—It is hereby notified for general information that, under section 13 of the Bengal Village Self-Government Act, 1919 (Bengal Act V of 1919), read with rule 35 of the rules for the election and appointment of members of union boards, Munshi Saadat Ali, son of Munshi Samiraddin, of village Char Lakshigonj, police-station Kutirhat, has been duly elected to be a member of Kutirhat union board No. 1, police-station Sonagazi, in the Feni subdivision of the district of Noakhali, *vice* Munshi Kala Mean, deceased.

R. A. DUTCH, *District Magistrate.*

Dacca Division—Dacca.

No. 3726J.—22nd July 1936.—In exercise of the powers delegated to me under section 544 of the Bengal Municipal Act, 1932, in Government of Bengal, Local Self-Government Department, notification No. 5780M., dated the 28th September 1935, I hereby extend the provisions of section 420 of the said Act to the Bhola Municipality in the district of Bakarganj.

No. 3744J.—23rd July 1936.—It is hereby notified for general information that in exercise of the powers delegated to me by the Bengal Government notification No. 3403L.S.-G., dated the 1st December 1904, I do hereby direct under section 6(*c*) of the Bengal Ferries Act, I of 1885, a public ferry over the Dolaikhal at Dayaganj between Jatrabari, police-station Tangi, on Dacca-Demra road and Dayaganj, police-station Sutrapur, in the district of Dacca, shall be established.

In exercise of the powers delegated to me by the Bengal Government notification No. 2141-L.S.-G., dated the 20th July 1920, I hereby direct under section 35 of the aforesaid Act, that the said ferry shall be managed by the district board of Dacca and that all the proceeds of the ferry and all fines levied and compensation received under the said Act in respect thereof shall be paid into the district fund of Dacca with effect from the date of this notification.

No. 3745J.—23rd July 1936.—It is hereby notified for general information that in exercise of the powers delegated to me by the Bengal Government notification No. 3403L.S.-G., dated the 1st December 1904, I do hereby direct under section 6(*c*) of the Bengal Ferries Act, I of 1885, that a public ferry over the Kazla khal on the Dacca-Demra road between Jatrabari village on one side and Matuali village, police-station Tejgaon on the other side, in the district of Dacca, shall be established.

In exercise of the powers delegated to me by the Bengal Government notification No. 2141L.S.-G., dated the 20th July 1920, I hereby direct under section 35 of the aforesaid Act, that the said ferry shall be managed by the district board of Dacca and that all the proceeds of the ferry and all fines levied and compensation received under the said Act in respect thereof shall be paid into the district fund of Dacca with effect from the date of this notification.

No. 3746J.—23rd July 1936.—It is hereby notified for general information that in exercise of the powers delegated to me by the Bengal Government notification No. 3403L.S.-G., dated the 1st December 1904, I do hereby direct under section 6(*c*) of the Bengal Ferries Act, I of 1885, that a public ferry over the Chunakhali khal between the village Joarlakshmipur, police-station Raipura, on one side and the village Ujilabo, police-station Raipura on Raipura-Belabo road on the other side, in the district of Dacca, shall be established.

In exercise of the powers delegated to me by the Bengal Government notification No. 2141L.S.-G., dated the 20th July 1920, I hereby direct under section 35 of the aforesaid Act, that the said ferry shall be managed by the district board of Dacca and that all the proceeds of the said ferry and all fines levied and compensation received under the said Act in respect thereof shall be paid into the district fund of Dacca with effect from the date of this notification.

W. H. NELSON, *Commissioner.*

Barisal, the 15th July 1936.

No. 4922J.—Notice is hereby given that the votes for holding the second election for filling up the vacancy in the ordinary seat allotted to the Barguna police-station on the Patuakhali local board will be recorded during the hours 11 a.m. to

3 p.m. at the following centres on the dates noted against each. The result of the election will be declared at the Barguna High English School at 4 p.m. on the 24th September 1936.

The registers showing the names of voters will be open to the inspection of voters in the office of the Subdivisional Officer, Patuakhali :—

Statement showing the names of polling centres with dates of election.

Union.	Name of polling centre.	Date of polling.
	Badarkhali School	21st September 1936.
II and III ..	Gourichanna Madrassa.	Do.
IV and V ..	Ailapatakata School	Do.
VI ..	Burirchar School ..	22nd September 1936.
VII and VIII	Barguna H. E School.	23rd September 1936.
IX and X ..	Garjanbunia School	Do.

Barisal, the 25th July 1936.

No. 5138J. It is hereby notified for general information that

(*a*) Under sub-section (2) of section 6 of the Bengal Village Self-Government Act, 1919 (Bengal Act V of 1919), the following gentlemen have been duly elected to be members of the following union boards in police-station Kowkhali in the Pirojpur subdivision of the Bakarganj district :

Sayna-Raghunathpur union board.

Maulvi Jennatali Sharif.

Babu Umacharan Kaibartta.

Maulvi Tasenuddin Sardar.

Maulvi Ansaruddin

Maulvi Jonabali Kabiraj

Maulvi Abdul Pezzak Fakir.

Sealkati union board

Maulvi Lehazuddin Howladar

Maulvi Harmujali Molla.

Maulvi Mobarekali Master.

Maulvi Menhazuddin Howlader

Maulvi Hinguluddin Sikdar.

Maulvi Mir Jafarali.

(*b*) Under sub-section (3) of section 6 of the Act, the following gentlemen have been appointed by the District Magistrate of Bakarganj to be members of the following union boards :—

Sayna-Raghunathpur union board.

Maulvi Abdul Karim Sikdar

Babu Sarbeswar Saha.

Babu Jogendra Narayan Mistri.

Sealkati union board

Maulvi Nazemali.

Babu Umesh Chandra Mistri

Munshi Eunus Khan

A. HYE, *Addl. District Magistrate.*

Faridpur, the 24th July 1936.

No. 6468J.—It is hereby notified for general information that

(*a*) Under sub-section (2) of section 6 of the Bengal Village Self-Government Act, 1919 (Bengal Act V of 1919), the following gentlemen have been duly elected to be members of the Alipur union board in police-station Rajbari of the Goalundo subdivision of the Faridpur district :—

Babu Parsha Nath Saha.

Babu Jagabandhu Saha.

Munshi Ahmadali Mia.

Babu Satish Chandra Rudra.

Munshi Badiruddin Khan.

Munshi Esmail Choudhury.

(*b*) Under sub-section (3) of section 6 of the Act, the following gentlemen have been appointed by the District Magistrate of Faridpur to be members of the said union board : —

Maulvi Kazi Majibar Rahman.

Babu Gopal Chandra Bose.

Md. Nedhu Sarar.

K. A. L. HILL, *District Magistrate.*

Mymensingh, the 22nd July 1936.

No. 692C. It is hereby notified for general information that—

(*a*) Under sub-section (*2*) of section 6 of the Bengal Village Self-Government Act, 1919 (Bengal Act V of 1919), the following gentlemen have been duly elected to be members of the undermentioned union boards of Netrakona, Purbadhala, Barhatta and Kendua police-stations in the Netrakona subdivision of the Mymensingh district :—

Netrakona police-station.

Mougati union board.

Maulvi Abdul Jabbar Khan.
Maulvi Serajul Husain Khan.
Maulvi Abul Husain Master.
Babu Durga Nath Chakravorty.
Babu Upendra Nath Mazumder.
Maulvi Aftabuddin Ahmad.

Medni union board.

Maulvi Syed Hussain Ahmad.
Maulvi Rayhenuddin Ahmad.
Maulvi Ismat Amin.
Babu Jogendra Chandra Saha.
Babu Surendra Nath Dutta
Maulvi Ahmad Husain Ahmad.

Thakurakona union board.

Babu Upendra Chandra Bhadra.
Maulvi Karim Newaj Talukdar.
Babu Prasanra Kumar Dhar.
Babu Hriday Ranjan Majumder.
Maulvi Tazammal Husain Ahmad.
Maulvi Asmat Bepari.

Singher Bangla union board.

Maulvi Mian Husain Ahmad.
Maulvi Mallikuddin Ahmad.
Babu Romesh Chandra Singha.
Maulvi Reajuddin Sheikh.
Maulvi Dildar Khan.
Babu Surendra Nath Sarkar.

Amtala union board.

Babu Krishna Kumar Saha Roy.
Babu Upendra Chandra Choudhury.
Babu Sonatan Namadas
Maulvi Aftab Husain Khan.
Maulvi Mominuddin Ahmad
Maulvi Imanuddin

Lakshmiganj union board.

Maulvi Nabi Husain.
Maulvi Bakshu Akanda.
Munshi Md. Sowabali.
Maulvi Abbasuddin Khan.
Maulvi Abbasuddin (Mukhtar).
Maulvi Mafiz.

Kailati union board.

Maulvi Shamsuddin.
Maulvi Golam Husain.
Maulvi Hashmat Ali.
Babu Suresh Chandra Deb Nath.
Babu Paresh Chandra Sen.
Maulvi Abdul Hannan.

Dakshin Bisura union board.

Maulvi Mafizuddin Khan.
Maulvi Wares Ali Sheikh.
Maulvi Ali Newaj Sheikh.
Maulvi Rusmat Sheikh.
Maulvi Shamsher Ali Fakir.
Maulvi Jan Mahmud Sarkar.

Challisa union board.

Babu Jogendra Chandra Talukdar.
Maulvi Aktar Sheikh.
Maulvi Emdadul Husain Khan.
Maulvi Surujuddin Khandaker.
Maulvi Nabi Husain Talukdar.
Idu Munshi.

Rouha union board.

Maulvi Nabi Husain.
Maulvi Rousanuddin.
Maulvi Maniruddin Haji.
Babu Surendra Chandra Sarkar.
Maulvi Mian Husain Talukdar.
Maulvi Bahadur Khan.

Purbadhala police-station.

Guatala union board.

Babu Guru Dayal Dhar.
Babu Jogendra Kumar Nandi.
Munshi Kalimuddin.
Hasan Ali Talukdar.
Babu Ram Chandra Das.
Babu Jogendra Kishore Sarkar.

Hogla union board.

Babu Brajendra Sundar Chanda.
Maulvi Abbas Ali Mir.
Maulvi Badiuzzaman Khan.
Maulvi Kadaruddin Khan.
Babu Bepin Chandra Chakravorty.
Babu Girish Chandra Saha Roy.

Ghagra union board.

Maulvi Abdur Razzaque Ahmad.
Maulvi Mahazam Talukdar.
Maulvi Ekin Ali Akanda.
Babu Charu Chandra Singh.
Maulvi Abdul Gaffur Talukdar.
Maulvi Yakub Ali Shah.

Jaria union board.

Maulvi Jahuruddin Sarkar.
Maulvi Maniruddin Master.
Maulvi Sujaruddin Talukdar.
Babu Kasi Charan Roy.
Babu Hirday Ranjan Chakravorty.
Maulvi Amiruzzaman Khan.

Dhalamulgoan union board.

Maulvi Sadaruddin Talukdar.
Maulvi Asrab Ali Talukdar.
Babu Surendra Chandra Khasnabis.
Babu Mahesh Chandra Singh Roy.
Maulvi Hafizuddin Talukdar.
Maulvi Maniruddin Akanda.

Purbadhala union board.

Babu Nrisingha Narayan Mazumder Choudhury
Babu Nagendra Narayan Mazumder Choudhury
Babu Haridas Mazumder Choudhury.
Babu Bhupendra Nath Sinha.
Munshi Torap Ali Sheikh.
Babu Purna Chandra Sinha.

Agia union board.

Babu Rajani Kanta Chakravorty.
Babu Bhupesh Chandra Joardar.
Babu Rameswar Khaskhil.
Babu Prithwish Chandra Mazumder.
Babu Gaya Nath Dutta
Maulvi Mobarak Husain Khandaker.

Bishkakuni union board.

Maulvi Aftabuddin Ahmad.
Sachu Munshi.
Maulvi Mafizuddin.
Maulvi Imanali Talukdar
Maulvi Jashmat Ali Talukdar.
Babu Rajendra Chandra Routh.

Khalisaur union board.

Maulvi Abdul Majid Talukdar
Maulvi Maizuddin Talukdar.
Maulvi Samiruddin Talukdar.
Maulvi Afsaruddin Talukdar.
Maulvi Hasan Ali Talukdar.
Maulvi Abbas Ali Talukdar.

Narandia union board.

Maulvi Sadar Sk.
Maulvi Jahuruddin Talukdar.
Maulvi Ismat Khan.
Maulvi Mahimuddin Talukdar.
Maulvi Md. Aju Sarkar Talukdar.
Maulvi Aziz Raj

Gohalakanda union board.

Maulvi Hashmat Sarkar.
Maulvi Meher Ali Ahmad.
Maulvi Mian Husain Sarkar.
Maulvi Amjad Ali.
Maulvi Mafiz Sarkar
Maulvi Ahmuddin Talukdar.

Bairati union board.

Maulvi Surejali Ali Khan.
Maulvi Dianat Khan.
Maulvi Abdul Khaleque.
Maulvi Mamuedin Talukdar.
Maulvi Nabi Husain Khan.
Piru Munshi.

Barhatta police-station.

Bousi union board.

Maulvi Md Pechu Talukdar.
Babu Jyotish Chandra Laskar, B.A.
Babu Sarat Chandra Kunda Roy.
Munshi Golam Husain Sk.
Babu Jogesh Chandra Deb Roy Talukdar
Munshi Abdul Gafur Biswas.

Sahata union board.

Munshi Md. Momtazuddin.
Babu Satish Chandra Chakravorty.
Munshi Md. Intaz.
Munshi Sk. Wahed Ali.
Munshi Sk. Wahizuddin.
Babu Rajendra Narayan Dutta.

Barhatta union board.

Maulvi Safaruddin Ahmad Mazumdar.
Maulvi Azmatullah.
Babu Paresh Nath Mahalanabis.
Babu Kumud Chandra Gune.
Munshi Mafizuddin Ahmad
Munshi Rafizuddin Khan.

Asma union board.

Maulvi Samiruddin Khan
Babu Surendra Nath Choudhury.
Munshi Badiul Alam Khan.
Babu Dwaraka Nath De Talukdar.
Munshi Mahiuddin Ahmad.
Munshi Shahnewaj Khan.

Chirang union board

Munshi Abdul Ali.
Munshi Mahiuddin Ahmad.
Munshi Bahdur Ali Talukdar.
Munshi Syed Mobarak Ali.
Munshi Majid Talukdar.
Babu Anat Bandhu Sarkar.

Singdha union board.

Babu Jnanendra Kishore Chakravorty.
Babu Salendra Nath Guha.
Babu Manada Ranjan Dutta Choudhury.
Babu Ram Kumar De.
Munshi Jainuddin Sheikh.
Munshi Abdus Samad Bepari.

Kendua police-station.

Madanpur union board.

Maulvi Abdul Gafur Fakir.
Maulvi Md. Abdul Gafur.
Maulvi Syed Mominuddin.
Maulvi Abdul Khaleque Fakir.
Maulvi Faizuddin.
Maulvi Syed Rahim Newaj.

Ashujia union board.

Babu Brajendra Nath Chakravorty.
Maulvi Khaleque Newaj Talukdar.
Maulvi Gumez Khan.
Babu Nishi Kanta Bhattacharjee.
Babu Gaya Nath De.
Babu Surendra Kishore Chakravorty.

Dalpa union board.

Maulvi Sonafaruddin Master.
Maulvi Yakub Ali Doctor.
Maulvi Hasan Ali.
Maulvi Kadar Husain Talukdar,
Maulvi Sadir Talukdar.
Maulvi Abdul Gani.

Goradoba union board.

Maulvi Abdul Hamid Khan.
Maulvi Abbas Bhuayan.
Maulvi Umar Ali Sarkar.
Maulvi Abdus Sayed.
Maulvi Ijjat Ali Master.
Maulvi Abdul Hakim.

Gonda union board.

Maulvi Jahiruddin Master.
Maulvi Abdus Sobhan Talukdar.
Maulvi Abbas Ali Bhuyan.
Maulvi Abdul Husain.
Maulvi Miafaruddin Khan.
Maulvi Syed Ali Bhuyan.

Sandikona union board.

Munshi Golam Husain.
Babu Dinesh Chandra Ukil.
Maulvi Samiruddin Sheikh.
Maulvi Mafizuddin Bhuyan.
Babu Srish Chandra Ukil.
Maulvi Farid Bhuyan.

Maska union board.

Maulvi Abdul Majid Bhuyan.
Maulvi Jahiruddin Bhuyan.
Maulvi Abdul Hamid Khan.
Maulvi Musrab Ali.
Maulvi Abdul Majid Khandakar.
Babu Taranath Sen.

Balasimul union board.

Maulvi Sarafat Ali.
Maulvi Shanewaj Talukdar.
Maulvi Isab.
Maulvi Md. Wafizuddin.
Maulvi Md. Hamiduddin.
Babu Birendra Chandra Sarkar.

Noapara union board.

Babu Dinesh Chandra Bhattacharjee.
Babu Durga Prasanna Majumder.
Babu Jogendra Nath Majumder.
Babu Shiba Nandan Chakravorty.
Babu Binode Chandra Sanyal.
Maulvi Ekin Ali.

Kandiura union board.

Maulvi Abdus Sobhan.
Maulvi Mian Husain Talukdar,
Maulvi Tyeb Ali Khandakar.
Maulvi Khaleque Newaj Bhuyan.
Maulvi Najab Ali Talukdar.
Maulvi Mafizuddin Bhuyan.

Chirang union board.

Maulvi Abdus Samad Khan.
Maulvi Baliar Khan.
Maulvi Khaleque Dad Khan.
Maulvi Maizuddin Khan.
Maulvi Jabbar Ali Bhuyan.
Maulvi Abdur Razzaque.

Amtala-Roailbari union board.

Maulvi Kitab Ali Bhuyan.
Maulvi Amiruddin Sarkar.
Maulvi Abdul Husain Bhuyan.
Maulvi Abdur Rashid Bhuyan.
Babu Shyama Charan Biswas.
Maulvi Abdul Hoque Ahmad.

Paikura union board.

Maulvi Abdul Aziz Bhuyan.
Babu Hirendra Nath Chakravorty.
Maulvi Golam Mustafa Milki.
Maulvi Md. Harmuz Bhuyan.
Maulvi Cherag Ali Mirdha.
Maulvi Shamsuzzaman.

Muzaffarpur union board.

Maulvi Abdul Gafur Milki.
Maulvi Abal Husain Chaudhury.
Maulvi Alauddin.
Maulvi Chamak Ali Ahmad.
Maulvi Osimuddin Mir.
Maulvi Martuz Ali Milki.

(*b*) Under sub-section (*3*) of section 6 of the Bengal Village Self-Government Act, 1919 (Bengal Act V of 1919), the following gentlemen have been appointed by the District Magistrate of Mymensingh to be members of the undermentioned union boards in the Netrakona subdivision of the Mymensingh district :—

Netrakona police-station.

Mougati union board.

Kubaduzzaman Khan.
Maulvi Md. Mahiuddin Talukdar.
Babu Uma Prasanna Dutta.

Medni union board.

Babu Ram Chandra Dhar.
Maulvi Elahi Newaj Khan.
Maulvi Rajab Ali Khan.

Thakurakona union board.

Maulvi Abdul Ali.
Babu Harendra Nath Chanda.
Babu Debendra Nath Ghose.

Singher Bangla union board.

Maulvi Abdul Jabbar.
Maulvi Miraj[illegible]ddin.
Babu Govinda Chandra Das, B.A.

Amtala union board.

Maulvi Hafizuddin.
Maulvi Mulfat.
Babu Dwaraka Nath Dutta.

Laksmiganj union board.

Babu Nanda Lal Saha, B.A.
Babu Nidhu Charan Rudra Pal.
Maulvi Mafizuddin Ahmad.

Kailati union board.

Maulvi Arfan Ali Khan.
Maulvi Abdul Jabbar.
Babu Kunja Nath Gun.

Dakshin Bisura union board.

Maulvi Md. Syed Ali.
Maulvi Muzaffaruddin Sarkar.
Babu Rohini Kanta De.

Challisha union board.

Maulvi Abdul Wahed.
Maulvi Umed Ali Talukdar.
Babu Jogesh Chandra Ghose.

Rouha union board.

Babu Birendra Krishna Dutta Choudhury.
Maulvi Abal Hossain.
Maulvi A. Q. Abdul Hadi.

Purbadhala police-station.

Guatala union board.

Maulvi Md. Afsaruddin.
Maulvi Abdul Mannan Akanda.
Babu Jogendra Kumar Sarkar.

Hogla union board.

Maulvi Abdur Rahim Talukdar.
Maulvi Md. Sabir Akanda.
Babu Surendra Chandra Sanyal.

Ghagra union board

Babu Raj Kumar De Sarkar.
Maulvi Mahiuddin Khan.
Maulvi Bitu Khan.

Jaria union board.

Maulvi Fajaruddin Bepari.
Maulvi Sarip Sarkar.
Babu Kali Kumar Sarkar.

Dhalamulgaon union board.

Maulvi Md. Abul Husain Ahmad.
Maulvi Akhtar Husain Khan.
Babu Kali Sundar Bhadro.

Purbadhala police-station.

Purbadhala union board.

Munshi Meherulla of Laujani.
Maulvi Kazi Abdul Hamid.
Maulvi Maniruddin Master.

Agia union board.

Maulvi Azimuddin Khan of Agia.
Maulvi Azimuddin Khan of Baniakanda
Maulvi Badiuzzaman Khan.

Biskakuni union board.

Maulvi Shamsher Ali Talukdar.
Faijuddin Munshi.
Maulvi Hanifuddin Talukdar.

Khalisaur union board.

Maulvi Abdul Hamid Khan.
Maulvi Moshmuddin.
Babu Rajani Kanta Chakravarty.

Narandia union board.

Babu Ananda Kishore Majumder.
Babu Devendra Chandra Debnath.
Maulvi Abdul Aziz Talukdar.

Gohaldanda union board.

Babu Akshoy Kumar Sarkar
Babu Kashi Nath Roy Barman.
Maulvi Hashmat Sarkar.

Bairati union board

Babu Surendra Chandra Chakravarty.
Maulvi Abul Husain Talukdar.
Maulvi Abdul Akkas.

Kendua police-station.

Madanpur union board

Babu Ashiti Kumar Chakravarty.
Babu Harendra Kishore Sarma Biswā
Maulvi Md. Basiruddin.

Kendua police-station.

Ashujia union board.

Babu Purna Chandra Chakravorty, B A.
Maulvi Kairat Ati Sarkar.
Maulvi Dastar Ali.

Dalpa union board.

Babu Jogendra Kishore Chakravorty
Maulvi Maniruzzaman Khan.
Babu Upendra Chandra Dhar.

Goradoba union board.

Babu Kailash Chandra Acharjee
Maulvi Abdul Husain
Maulvi Ali Newaj Bhuyan.

Gonda union board

Babu Jatindra Nath Biswas.
Maulvi Abdur Rahim Sarkar.
Maulvi Jalimuddin Bhuyan.

Sandikona union board.

Babu Krishna Kumar Dutta Sarkar.
Maulvi Kudrat Ali.
Maulvi Abdul Hekim.

Maska union board.

Babu Brogendra Kishore Das.
Babu Umesh Chandra Biswas.
Maulvi Md Ibrahim.

Balasimul union board.

Maulvi Hafezuddin Ahmed.
Babu Kali Sankar Dutta Bakshi.
Maulvi Md. Ainuddin Sarkar.

Noapara union board.

Babu Dhirendra Chandra Chakravorty, Head Master.
Maulvi Asab Ali Master.
Maulvi Shanewaj Talukdar.

Kandiura union board.

Babu Dhirendra Nath Biswas.
Maulvi Serajul Islam Khan.
Babu Jogendra Nath Chakravorty.

Chirang union board.

Babu Girindra Chandra Sarkar.
Babu Nagendra Chandra Roy
Maulvi Gabar Ali Khan.

Amtala Roailbari union board.

Babu Girija Kanta Biswas.
Babu Upendra Chandra Bhattacharjee.
Maulvi Muzaffar Husain Haji.

Paikura union board.

Afsar Munshi.
Babu Sachindra Chandra Dutta.
Babu Prabhat Chandra Patranabis.

Muzaffarpur union board.

Maulvi Dewan Abdul Majid.
Babu Judhisthir Nath, B.L.
Babu Mathura Nath Biswas.

Barhatta police-station.

Bousi union board.

Babu Jatindra Nath Sen.
Munshi Mahiuddin Talukdar.
Munshi Kismatuddin.

Sahata union board.

Babu Suresh Chandra Chakravorty, B.Sc.
Babu Prasanna Kumar Sarkar Choudhury.
Munshi Md. Tazimuddin.

Barhatta union board.

Babu Suresh Chandra Dutta Dastidar.
Babu Guru Nath Pandit.
Munshi Sahabuddin Ahmad Thakur.

Asma union board.

Maulvi Salimuddin Khan.
Babu Basanta Kumar Nandi.
Munshi Wali Mahmud Sheikh.

Chiram union board.

Munshi Aftabuddin Ahmed.
Mohammad Hashamuddin of Ranijibanpur.
Babu Hem Chandra Das.

Singdha union board.

Maulvi Abdul Hashem.
Munshi Rabiullah
Munshi Naimuddin Bepari.

J. L. LLEWELLYN, *Addl. District Magistrate.*

Presidency Division—Calcutta.

No. 1462M.—22nd July 1936.—In exercise of the powers conferred by section 50 of the Bengal Municipal Act, 1932 (Bengal Act XV of 1932), it is hereby notified for general information that Babu Gour Das Kundu has been elected Vice-Chairman of the Kumarkhali Municipality in the district of Nadia, in place of Maulvi Md. Eradali Meah, on leave.

A. J. Dash, *Commissioner.*

Orders by the Deputy Inspector-General of Police, Presidency Range.

Calcutta.—No. 3976.—20th July 1936.—Maulvi Muhammad Nurul Husain, officiating Inspector, Nadia, will continue to act as such, *vice* Babu Sharat Chandra Ghosh, Inspector of that district, retired from service with effect from 1-7-1936, a.m.

Babu Nagendra Nath Sarkar, officiating Inspector, 24-Parganas, will continue to act as such, *vice* Babu Suresh Chandra Basu, Inspector of that district, retired from service with effect from 1-7-1936, a.m.

L. H. Burton,

Deputy Inspector-General of Police.

Rajshahi Division—Jalpaiguri.

No. 2974J.—21st July 1936.—Under the provisions of rule 691A, Chapter XVIII-A of the Bengal Jail Code, I hereby appoint Maulvi Md. Amiruddin, Head Maulvi, Zillah School, Jalpaiguri, to be an Honorary Teacher of the Jalpaiguri Jail for a period of two years.

No. 3463M.—20th July 1936.—In exercise of the power conferred upon me by section 25 of the Bengal Local Self-Government Act, III of 1885, as amended by Act V (B.C.) of 1908, I approve of the election by the members of the Sadar Kurseong local board in the district of Darjeeling of the Subdivisional Officer of Kurseong as their Chairman.

No. 3484M.—22nd July 1936.—It is hereby notified for general information that, under section 41 of the Bengal Local Self-Government Act, 1885 (Bengal Act III of 1885), I appoint the following gentlemen to be members of the Takdah Union Committee in the district of Darjeeling :—

The Khas Mahal Deputy Collector, Darjeeling (*ex-officio*).

The Khas Mahal Manager, Darjeeling (*ex-officio*).

Mr. T. P. Banerjee, tea garden owner, Panna Lodge, Takdah Cantonment (Happy Valley Tea Estate, Darjeeling).

Mr. K. C. De, C.I.E., I.C.S. (Retired), Devanibas, Takdah Cantonment (2, Gokhale Road, Calcutta).

Subedar Major Jitman Rai, pensioner, Takdah Cantonment (2, Gurkha Officer's quarters).

Mr. Pasang Lama, landholder and contractor, Mani Bazar, Takdah Cantonment.

Babu Ram Prosad Ram, shopkeeper, Mani Bazar, Takdah Cantonment.

No. 3530M.—24th July 1936.—Whereas by notification No. 201L.S.-G., dated the 13th January 1934, the Hindu community has been declared a minority community for the purposes of election of members to the East and West Bogra local boards in the district of Bogra, and whereas it has been decided by Government that one seat and two seats, respectively, shall be reserved for the Hindu community on each board, it is hereby notified that in exercise of powers conferred on me by rule 19 of the Election Rules under the Local Self-Government Act of 1885 (Act III of 1885) the number of persons to be elected from each thana in the district to the local boards should be as shown below :—

Bogra district.

Thana.	Number of members to be elected for the thana.	
	General seats.	Special seats for the minority community.
East Bogra local board.		
Bogra ..	2	..
Gabtoli ..	1	..
Sariakandi ..	2	..
Dhunot ..	1	.
Sherpur ..	1	1
	7	1
West Bogra local board.		
Dhupchanchia ..	1	..
Kahalu ..	1	..
Adamdighi ..	1	1
Jaipurhat Pandhbibi ..	1	1
Khetlal ..	2	..
Sibganj ..	2	..
	8	2

This cancels notification No. 306Met., dated the 22nd March 1922.

No 3491M.—22nd July 1936. The following statement showing the number of members of the Sadar local board, Jalpaiguri, to be elected for each thana as decided by me in exercise of the power conferred on me by rule 19 of the rules as amended by notification No 2898L S G , dated the 5th July 1934, and made under clause (*l*), section 138 of the Bengal Local Self-Government Act, 1885 (Bengal Act III of 1885), is published for general information.

This notification cancels my notification No. 519M., dated the 19th February 1930 :—

Name of thana.	Constitution of the thana.	Number of members to be elected for the thana.
	Jalpaiguri district.	
	Sadar local board.	
Rajganj ..	Rajganj police-station	1
Pochagarh-Tetulia ..	Police-stations of Pochagarh and Tetulia	1
Debiganj ..	Police-station Debiganj	1
Bodeswari-Berubari ..	Union Nos. IX (Boalmari-Nandanpur), X (Berubari), XI (Kharija-Berubari), XII (South Berubari) of Jalpaiguri police-station and Union Nos VI (Bonogram-Haripur), VII (Kajaldighi-Jotepashua), VIII (Barashoshi-Bodeswari), IX (Marea-Kamlapukhuri) of Boda police-station.	1
Jalpaiguri ..	Police-station Jalpaiguri excluding Union Nos. IX (Boalmari-Nandanpur), X (Berubari), XI (Kharija-Berubari), XII (South Berubari).	1
Boda ..	Police-station Boda excluding Union Nos. VI (Bonogram-Haripur), VII (Kajaldighi-Jotepashua), VIII (Barashoshi-Bodeswari), and IX (Marea-Kamlapukhuri).	1
Patgram ..	Police-station Patgram	1
Mainaguri ..	Police-station Mainaguri	2
Dhupguri ..	Police-station Dhupguri	1

L. R. FAWCUS, *Commissioner (offg.)*.

Registered No. C207

The Calcutta Gazette

THURSDAY, JULY 30, 1936.

PART IA

Orders and Notifications by the Government of India republished for general information.

LEGISLATIVE DEPARTMENT.

NOTIFICATIONS.

Simla, the 10th July 1936.

No. F. 111/36-C. & G. (i).—The Governor General is pleased to accept the resignation by Mr. A. J. Dash of his office of Member of the Legislative Assembly.

No. F. 111/36-C. & G. (ii).—In pursuance of the provisions of sub-rule (2) of rule 26 of the Legislative Assembly Electoral Rules, the Governor General is pleased to nominate Mr. Percival Joseph Griffiths, being an official, to be a Member of the said Legislative Assembly.

No. F. 111/36-C. & G. (iii).—In pursuance of the provisions of sub-rule (2) of rule 26 of the Legislative Assembly Electoral Rules, the Governor General is pleased to nominate Mr. Srimanta Kumar Das Gupta, M.B.E., being an official, to be a Member of the said Legislative Assembly.

G. H. SPENCE,
Secy. to the Govt. of India.

FOREIGN AND POLITICAL DEPARTMENT.

NOTIFICATION.

Simla, the 14th July 1936.

No. 425-G.—With reference to notification No. 286-G., dated the 12th May 1936, the provisional recognition of the appointment of Dr. F. Tousek as Consul for Czechoslovakia at Calcutta has been confirmed by His Majesty's Government.

H. A. F. METCALFE,
Foreign Secy. to the Govt. of India.

HOME DEPARTMENT.

NOTIFICATIONS.

JUDICIAL.

Simla, the 16th July 1936.

No. F. 25/1/36.—Under the provisions of sub-section (2) of section 105 of the Government of India Act, the Governor General in Council is pleased to appoint Mr. R. F. Lodge, I.C.S., District and Sessions Judge, Sylhet and Cachar, to act as a Judge of the High Court of Judicature at Fort William in Bengal with effect from the date on which he assumes charge of his duties, during the absence, on leave, of the Hon'ble Mr. Justice D. C. Patterson, I.C.S., or until further orders.

J. A. THORNE,
Joint Secy. to the Govt. of India.

POLICE.

The 15th July 1936.

No. F. 21/23/36.—In exercise of the powers conferred by section 27 of the Indian Arms Act, 1878 (XI of 1878), the Governor General in Council is pleased to direct that the following further amendment shall be made in the Indian Arms Rules, 1924, namely :—

In Schedule I to the said Rules, in the entries in the second column relating to items (1) to (6) after clause (*f*) the following clause shall be inserted, namely :—

"(*g*) Appliances (including pistols, pistol pens, pistol pencils, hand grenades, cartridges, etc.), for discharging gas."

M. G. HALLETT,
Secy. to the Govt. of India.

DEFENCE DEPARTMENT.

Simla, the 18th July 1936.

Part B.

(NAVY BRANCH.)

No. 492.—The services of Engr.-Comdr. J. E. Moloney, R.I.N., are placed at the disposal of the Govt. of India, Dept. of Commerce, for employment as offg Principal Engr. and Ship Surveyor, Mercantile Marine Dept., Calcutta, with effect from the 4th Apl. 1936, and as Principal Engr. and Ship Surveyor, Mercantile Marine Dept., Calcutta, with effect from the 3rd July 1936, *vice* Engr.-Comdr. G. Hull, R.I.N.

No. 493.—The services of Engr.-Comdr. J. H. Mackay, R.I.N., will continue to remain at the disposal of the Govt. of India, Dept. of Commerce, for employment as offg. 2nd Engr. and Ship Surveyor, Mercantile Marine Dept., Calcutta, with effect from the 3rd Apl. 1936, and as 2nd Engr. and Ship Surveyor, Mercantile Marine Dept., Calcutta, with effect from the 3rd July 1936, *vice* Engr.-Comdr. J. E. Moloney, R.I.N.

No. 494.—The services of Engr.-Lt.-Comdr. H. J. Creswell, R.I.N., will continue to remain at the disposal of the Govt. of India, Dept. of Commerce, for employment as offg. 3rd Engr. and Ship Surveyor, Mercantile Marine Dept., Calcutta, with effect from the 3rd Apl. 1936, and as 3rd Engr. and Ship Surveyor, Mercantile Marine Dept., Calcutta, with effect from the 3rd July 1936, *vice* Engr.-Comdr. J. H. Mackay, R.I.N.

No. 495.—The services of Engr.-Lt.-Comdr. A. B. Collins, R.I.N., will continue to remain at the disposal of the Govt. of India, Dept. of Commerce, for employment as offg. 4th Engr. and Ship Surveyor, Mercantile Marine Dept., Calcutta, with effect from the 3rd Apl. 1936, and as 4th Engr. and Ship Surveyor, Mercantile Marine Dept., Calcutta, with effect from the 3rd July 1936, *vice* Engr.-Lt.-Comdr., H. J. Creswell, R.I.N.

G. R. F. TOTTENHAM,
Secy. to the Govt. of India.

CENTRAL BOARD OF REVENUE.

NOTIFICATIONS.

CUSTOMS.

Simla, the 18th July 1936.

No. 46.—In exercise of the powers conferred by section 9 of the Sea Customs Act, 1878 (VIII of 1878), the Central Board of Revenue directs that the following further amendment shall be made in the rules published with the notification of the Government of Bengal in the Financial Department No. 1390-T.F., dated the 6th July 1903, namely :—

In rule 37 of the said rules for the words, figures, brackets and letter "Before permission can be granted to transport salt to the warehouse, the bonder will be required to enter into an engagement in Form 84 (Appendix A) with the Collector of the district or the Collector of Customs, if there be any, to defray the cost to Government of the establishment and charges noted below, or such other establishment and charges as may be agreed to by the bonder with the sanction of the Board." the following shall be substituted, namely :—

"Before permission can be granted to transport salt to the warehouse, the bonder will be required to enter into an agreement with the Collector of the district or the Collector of Customs, if there be any, to defray to Government the cost of such establishment as may, from time to time, be appointed by the Collector for the guard and supervision of the warehouse and of other charges connected therewith."

No. 47.—In exercise of the powers conferred by section 9 of the Sea Customs Act, 1878 (VIII of 1878), the Central Board of Revenue directs that the following amendment shall be made in the rules published with the notification of the Government of Eastern Bengal and Assam in the Financial and Municipal Department No. 5621F., dated the 20th June 1906, namely :—

In Form III of the Forms appended to the said rules for clause (1) the following clause shall be substituted, namely :—

"(1) to defray to Government within fifteen days before the close of each month, the cost of such establishment as may, from time to time, be appointed by the Collector for the guard and supervision of the warehouse and of other charges connected therewith ;"

R. R. SAKSENA,
First Secy., Central Board of Revenue (offg.).

DEPARTMENT OF INDUSTRIES AND LABOUR.

NOTIFICATION.

Simla, the 10th July 1936.

No. M.-1051.—In exercise of the powers conferred by sub-section (*1*) of section 46 of the Indian Mines Act, 1923 (IV of 1923), the Governor-General in Council is pleased to direct that the following further amendment shall be made in the Schedule to the notification of the Government of India in the Department of Industries and Labour, No. M.-1051, dated the 1st October 1935, namely :—

In the said Schedule, in entry 6, the words "at which twenty or more persons are employed or were employed on any day of the preceding twelve months in the crushing and sizing of stones" shall be omitted.

RESOLUTION.

The 14th July 1936.

No. M.-75.—The Governor-General in Council, with the sanction of His Majesty's Secretary of State for India in Council, is pleased to direct that the following further amendments shall be made in the rules regulating the grant by local Governments of licenses to prospect for minerals and of mining leases in British India, published with the Resolution of the Government of India in the Department of Commerce and Industry, No. 7552-7581-121, dated the 15th September 1913, as subsequently amended :—

In the provisos to clause (x) of rule 30 and clause (xvii) of rule 50—

(*i*) for the words "other emergency" the words "grave national emergency" shall be substituted.

(*ii*) for the words "appointed by the local Government," the words "appointed by the arbitrators by writing under their hands before proceeding with the arbitration" shall be substituted.

A. G. CLOW,
Secy. to the Govt. of India.

Registered No. C207

The Calcutta Gazette

THURSDAY, JULY 30, 1936.

PART IB

Educational Notices.

Burdwan Division.

Chinsura, the 6th June 1936.

Applications are invited for admission into the panel of candidates for the posts of English teachers in Government High and Normal Schools and in Madrasahs as well as for the posts of Sub-Inspectors of Schools in the scale of Rs. 75—8/2—115—5/2—135—10/2—175 in the Subordinate Educational Service for the year 1936-37.

2. Only graduates preferably with an Honours degree, possessing a degree or diploma in teaching or first class M.A. or M.Sc. in *subjects useful for school work* shall be eligible for inclusion in the panel.

3. The candidates must not exceed 25 years of age on 1st August 1936 unless they have full two years' teaching experience or have worked as Sub-Inspector of Schools for two years. In that case the age-limit may be relaxed up to 30 years. They must be residents of the Burdwan Division and British subjects.

4. No candidate shall apply simultaneously to more than one Inspector of Schools.

5. The applications should be submitted in duplicate in the prescribed form as given below (schedule II) and be accompanied by the original Matriculation and other University certificates and diplomas as well as any other certificates relating to the attainments and character of the candidates.

6. Every candidate shall furnish certificates written not more than one year prior to the date of application from two responsible persons unconnected with his College or University and not related to him, testifying to his private character.

7. No person shall be eligible for appointment who is not of sound mind, good physique and active habits and free from organic defects.

8. No person shall be eligible for appointment who has endeavoured to enlist for his candidature the support of persons of influence or of officials of Government. Spontaneous recommendations from persons interested in, or otherwise known to, the candidate shall be disregarded.

9. The candidates whose names have already been empanelled are required to renew their application for retention of their names in the panel to be considered again, failing which their names will be automatically removed from the panel.

10. The applications will be received by the undersigned on or before 31st July 1936.

K. C. Ray,

Inspector of Schools, Burdwan Division

Schedule II.

Education Department.

Forms of application for appointment to posts of English teacher and Sub-Inspector of Schools in the scale of Rs. 75—8/2—115—5/2- 135- 10/2- -175 in the Subordinate Educational Service.

(1) Name of applicant and present address (in full).

(2) Permanent address in full.

(3) Date of birth and age last birthday.

(4) Place of birth and permanent residence.

(5) Nationality at birth, religion and caste.

(6) Father's name, place of birth and nationality at birth.

(7) Father's address and profession (if dead, give address at date of death).

(8) Mother's place of birth and nationality at birth.

(9) Name of school last attended before entering University, giving address, with dates of entering and leaving.

(10) Name of University and College. Give dates of entering and leaving, and dates of passing examinations. State subjects studied, degrees, honours or prizes obtained and class and position in the class obtained at all University and other public examinations.

(11) Name of the Training College attended. Give year and class of the B. T. degree and the subject in which you specialised during training.

(12) Give details of any original work. If published, copies of the publication should be attached.

(13) Give details of any teaching experience with dates, and names of institutions. Any testimonials as to your ability as a lecturer, teacher, etc., should be attached.

(14) Give names of games played—

(*a*) at school,

(*b*) at college, and

(*c*) after leaving the college.

State whether you have had experience in organising games.

(15) State whether you are a trained Scout Master if, so, what troops you have been in charge of and where.

(16) Name two persons of position (with address in full) who can, if necessary, testify to your character, and to accuracy of your statements.

(17) If the time since leaving the school is not fully accounted for by replies given above, account for the remainder here with dates.

(18) Are you free from pecuniary embarrassments ? If you are under liability to repay money advanced by an institution or party for your education, state the particulars.

(19) Have you ever been pronounced unfit at any time for Government employment by the Medical Board or any other duly constituted medical authority in Bengal ? What serious illness have you suffered from since leaving the school ?

(20) Have you appeared at any examination for Government service ? If so, state when and for what appointment With what result?

(21) Have you previously been rejected for any appointment in Government service ? If so, when and for what reason ?

(22) Are you willing to be appointed to any post temporarily vacant ?

(23) Indicate the class of post you prefer, i.e., an English teachership or Sub Inspectorship or both.

(24) State here any facts not recorded above which should be mentioned as supporting you suitability for appointment.

(*Signature*) .....

(*Date*) .....

Dacca Division.

NOTIFICATION.

Dacca, the 6th July 1936.

Rules for the admission of private candidates to the Calcutta University Matriculation Examination, 1937.

1. A student who has not attended any school, recognized or unrecognized, for at least one year previous to the examination, will be treated as a private candidate. Teachers of schools are also considered as private candidates.

2. Private candidates who desire to sit for the ensuing University Matriculation Examination must appear at the Test Examination of any one of the undermentioned schools, to be held on the 1st December 1936 and the days following :—

(1) Dacca Collegiate School.

(2) Mymensingh Zilla School.

(3) Jamalpur Government High School.

(4) Faridpur Zilla School.

(5) Barisal Zilla School.

(6) Bhola Government High School.

(7) Jhalakati Government High School.

(8) Pirozpur Government High School.

3. Every private candidate must submit his application for admission to the Test Examination in the prescribed form on or before the 2nd November 1936 to the Inspector of Schools, Dacca Division. He must produce a certificate from a responsible Government officer to the effect (1) that he has not attended any school, recognized or unrecognized, for at least one year previous to the examination, (2) that his conduct and character have been good, (3) that he has diligently and regularly prosecuted his studies, and (4) that he has been subject to proper discipline.

Candidates who intend to appear at the Test Examination in the Dacca Collegiate School must submit their applications in duplicate.

A student, who failed to pass the annual examination for promotion to class X at the end of the session 1935 and then left the school will not be allowed to appear at the examination.

4. Every private candidate must also forward with his application his transfer certificate from the school (if any) in which he last read, or the Registrar's receipt (if he appeared at any previous Matriculation Examination).

Those who have never read in any school should produce either their horoscope or an affidavit sworn by their parents or guardians before a competent Magistrate declaring their age and a certificate from a respectable person with personal knowledge of the fact of the case that he has never been to any school.

5. Private candidates offering Hygiene as one of their subjects will be required to satisfy the Inspector of Schools that they have undergone a course of training in the subject. For this purpose they should submit along with their applications, certificates of training in it from a registered medical practitioner or from a recognised teacher in Hygiene.

6. Private candidates from outside the territorial jurisdiction of the Calcutta University including teachers of schools must obtain the sanction of the University to their migration before they are allowed to appear at the Test Examination for private candidates.

7. Teachers of schools recognised by the Calcutta or any other University or any Board of Secondary Education in India, who intend to appear at the Matriculation Examination as private candidates, are not required to pass the Test Examination. They should apply to the University for permission to appear at the Final Examination in proper time.

8. Every private candidate must pay a fee of Rs. 5 which should be remitted to the Inspector of Schools, Dacca Division, along with the application for admission to the Test Examination, on or before the prescribed date (2nd November 1936), after which a fine of Rs. 2 will have to be paid for each week's delay up to 16th November 1936. No application will be entertained after that date. *Where there are Treasuries or Sub-Treasuries near the residence of candidates the fee should be deposited there and chalans in duplicate showing the deposit submitted to the Inspector of Schools along with the application.* If the candidate be considered eligible for admission to the Test Examination a letter of permission will be issued. This should be shown to the Headmaster on the first day of examination. *In no circumstances will this fee be refunded.*

9. On the first date of examination, he must be accompanied, for the purpose of identification, by some person known to the officer conducting the examination, otherwise he will not be admitted to the Test Examination.

10. The Headmasters of the schools named above should send to this office, for orders, a statement, *in duplicate*, showing the marks gained by each private candidate in each subject at the Test Examination, *within a fortnight from the date of the said examination.* The application forms of candidates who are declared eligible should be forwarded to this office for countersignature, duly filled in and signed.

11. Private candidates allowed to go up for the Matriculation Examination should submit their fees to the Headmaster of the Government High School where they appear at the Test Examination at the time of filling up their application forms. The Headmaster will send the fees to the Controller of Examinations along with the applications countersigned by the Inspector of Schools so as to reach him on or before the date fixed by the University.

12. The Matriculation Examination will be held in March 1937. The dates will be notified by the Calcutta University.

Intermediate and B.A. Examinations, 1937.

Bona fide teachers of recognized English schools and inspecting officers of the Education Department, who have been employed as such for at least three academical years (32 calendar months) preceding the dates of examinations, will be admitted to the I.A. and B.A. Examinations of the Calcutta University as non-collegiate students, provided they have obtained special permission of the Senate.

Demonstrators, Laboratory Assistants and Librarians of affiliated colleges are regarded as teachers.

2. Candidates who have obtained special permission of the Senate must submit their applications to this office for countersignature not later than the 2nd January 1937.

3. Candidates should carefully read the printed form of application and supply all the necessary information.

4. The following documents in original must accompany the application :—

(*a*) The letter from the Senate of the Calcutta University permitting the candidate to appear at the ensuing examination.

(*b*) The University certificate to show that the candidate has passed the next preceding examination.

(*c*) Registrar's receipt in the case of those who were admitted to the same examination in a previous year.

(*d*) Registrar's receipt to show that the candidate's name has been registered as a "University student." If his name has not already been registered, he should produce a Post Office receipt showing that the required fee of Rs. 2 has been remitted to the University to get his name registered.

(*e*) A certificate from the Secretary in the case of teachers, and from the immediate superiors in the case of others, showing (*i*) that he has been serving as such for three academical years (32 calendar months), (*ii*) that he has been diligently and regularly prosecuting his studies and (*iii*) that his character and conduct have been good.

5. The dates of I.A. and B.A. Examinations, 1937, will be notified by the Calcutta University in the *Calcutta Gazette* in due course.

6. Applications with the countersignature of the undersigned, together with the fees for the above examinations, must reach the office of the Controller of Examinations, Calcutta University, on or before the dates to be fixed by the University and must be sent to that office by the candidate himself direct.

ABUL HASHEM KHAN CHAUDHURI,
Inspector of Schools, Dacca Division.

Dacca Division.

Test Examination of private candidates for the Calcutta University Matriculation Examination, 1937.

(This application must reach the office of the Inspector of Schools, Dacca Division, on or before the 2nd November 1936.)

APPLICATION.

To the Inspector of Schools, Dacca Division,
Ramna, Dacca.

Sir,

I request permission to present myself at the ensuing Test Examination of private candidates for the Matriculation Examination of 1937.

I enclose herewith the necessary certificates as required under the rules.

The fee of rupees five is remitted by postal money order./Treasury chalans, in duplicate, showing the deposit of the fee of Rs. 5 are enclosed herewith.

I am,

Sir,

Yours obediently,

Name.....

Date.....

Address.....

Particulars to be filled in by the candidates.

1. Name of candidate

2. Father's name

3. Residence

   Post office

   Village

   Police-station

   District

4. Date of birth and age on 1st March 1937.

5. Name of the school (if any) in which he last read and date of last attendance in the school.

6. Name of the Government school at which he intends to appear at the Test Examination.

7. Whether he appeared at the Matriculation Examination in any previous year.

8. Name of the centre at which he intends to appear at the Final Matriculation Examination.

9. Name of the second language.

10. Vernacular language.

11. Vernacular language from which translation is to be made into English in the first English Paper.

12. Additional subjects to be taken up :—

   (*i*) Additional Mathematics.

   (*ii*) Additional paper in classical language.

   (*iii*) History.

   (*iv*) Geography.

   (*v*) Elementary Mechanics.

N.B.—Any two of the additional subjects taken up are to be retained and the rest scored through.

NOTIFICATION.

Test Examination of Private Candidates for the Matriculation Examination, 1937, in the Rajshahi Division.

1. Private students are those—(*a*) who never attended any recognised school previous to the Matriculation Examination they are going to sit for, and (*b*) who have attended schools but after leaving them waited till the time they would normally require to appear at the Matriculation Examination had they been students of some recognised schools. The period of non-attendance in any institution for at least one year prior to the Final Matriculation Examination is compulsory for such students.

The term "Private candidate" includes *bona fide* teachers of schools.

2. A test examination of private students will be held at the Government high, zilla and collegiate schools in the Rajshahi Division, on Wednesday, the 25th November 1936, and the six following days (one paper being held daily from 11 a.m. to 2 p.m.). Such candidates only as reside in any of the districts of the Rajshahi Division and Cooch Behar will be admitted to the examination.

3. Each private candidate will have to pay a fee of Rs. 5, which is to be remitted to the Inspector of Schools, Rajshahi Division, at Jalpaiguri, and not to the undersigned by name, so as to reach him on or before the 15th October 1936, along with an application for permission to appear at the test examination. Candidates applying after the prescribed date will have to pay a fine of Rs. 2 for each week's delay up to 5th November 1936, after which no application will be entertained. The candidates must decide definitely to enter for the examination before depositing their fees. The fees once deposited will not be refunded under any circumstances whatsoever. Regular receipts will be issued to candidates for any payment made by them in the shape of admission fees and fines.

4. Each application for permission to appear at the test examination must be accompanied with an application in the printed form and the documents noted below :—

(*a*) The name of the school in which the candidate last studied.

(*b*) The transfer certificate (in original) granted to the candidate by the Head Master of the school in which he last read, or

(*c*) In the case of a candidate who previously appeared at the Matriculation Examination, the Controller's receipt (in original) for the fees paid.

(*d*) In the case of a candidate who has not attended any school (*i*) a certificate from his guardian to that effect, (*ii*) a certificate from a respectable gentleman as in rule (*f*), (*iii*) his horoscope or an affidavit sworn by his guardian before a 1st class Magistrate in support of his age, (*iv*) a declaration from his legal guardian to the effect that he did not join any political movement and is not under any orders of restriction or surveillance.

(*e*) A certificate from a Government servant in Certificate I in the application form to the effect that the candidate has prosecuted a regular course of study and has been subject to proper discipline, and that he has not read in any school since the last Matriculation Examination.

(*f*) In the case of a schoolmaster a certificate of good conduct from the Secretary of the school in which he is serving or from the District Inspector of Schools of the district concerned.

(*g*) Private candidates having Hygiene as their optional subject are required to produce certificate from a registered medical practitioner or from a recognised teacher in Hygiene to the effect that they have undergone a full course of training in it under them.

(*h*) *No action will be taken on any application which will come to this office in incomplete form.*

(*i*) No candidate who has not completed the age of 15 years on the first day of the month in which the Matriculation Examination is held shall be allowed to appear at it.

(*j*) A statement by the candidate giving the following facts :—

(1) Residence, giving the name of the village, post office and district clearly.

(2) Father's name.

(3) The name of the centre at which he intends to appear.

(4) Second language besides English.

(5) Vernacular language from which translation is to be made into English in English first paper.

(6) Which of the following subjects to be taken up :—

(*i*) Additional Mathematics.

(*ii*) Additional paper in the classical language.

(*iii*) History.

(*iv*) Geography.

(*v*) Elementary mechanics.

(*vi*) Hygiene.

5. The Inspector of Schools on being satisfied will issue a passport for admission to the test examination. No candidate will, however, be admitted unless he is identified to the satisfaction of the Head Master of the school at which he appears.

6. The Head Masters of the institutions named above should direct candidates who appear at their schools to fill up the application form for permission to appear at the Matriculation Examination in their presence. These applications will be forwarded to the office of the Inspector of Schools. The Inspector of Schools will then countersign the applications of those candidates who pass the test examination and forward them to the Head Masters concerned for transmission to the Registrar with the fees for the examination.

7. In no circumstances should the fee for the Matriculation Examination be sent to the Inspector's office. It should be sent to the Head Masters of the schools concerned where the candidates sat for the test examination for submission to the Controller together with the countersigned applications.

8. The Matriculation Examination will be held in March 1937, and the applications and fees must reach the office of the Controller on or before the date fixed by the University.

N.B.—A student who failed to pass the annual examination for promotion to class X at the end of the session of 1935 and then left the school can, under no circumstances, be allowed to appear at the examination.

Intermediate and B. A. Examinations.

1. District and Subdivisional Inspectors of Schools, Sub-Inspectors of Schools and *bona fide* masters of English schools, who have served as such for the full period of three academical years preceding the examinations, will be admitted to the abovenamed examinations.

2. Candidates for the Intermediate and B.A. Examinations must produce certificates of character and length of service from the Secretaries of their respective schools. Candidates for the B.A. Examination must forward with their applications their I.A. or F.A. certificates, and those for the Intermediate Examination, their Entrance or Matriculation certificates. Those candidates who were admitted to a former examination must produce the Controller's receipt in addition.

3. Under section 19 of the Indian Universities Act, candidates for the Intermediate and B.A. Examinations are informed that their applications for admission to these examinations will not be considered unless they enclose with their applications to this office the sanction of the Senate to appear at the said examinations. Candidates who have applied for or have obtained the special permission of the Senate for the purpose are required, under section 9, Chapter XV of the Revised Regulations dealing with the registration of University students, to apply at once to the Registrar, for the registration of their names as "University students". No person will be deemed a "University student" unless and until his name has been duly registered, and none but "University students" will be eligible for admission to any University examination other than the Matriculation.

4. The printed form of application should be carefully and correctly filled in and submitted to this office on or before the 3rd January 1937, together with other papers mentioned in rules 2 and 3, after which no application will be received.

5. The examinations will be held on dates to be notified by the University. Application with the countersignature of the undersigned and fees for the examination must reach the office of the Controller on dates to be fixed by the University and must be sent to that office by the candidates direct.

P. C. MUKHERJEE,

Inspector of Schools, Rajshahi Division.

Test Examination of Private Candidates for the Matriculation Examination, 1937.

(This application must reach the office of the Inspector of Schools, Rajshahi Division, on or before the 15th October 1936.)

APPLICATION.

To

THE INSPECTOR OF SCHOOLS,
RAJSHAHI DIVISION.

SIR,

I request permission to present myself at the ensuing Test Examination of the private candidates for the Matriculation Examination of 1937.

I beg to enclose herewith my Transfer certificate/Registrar's receipt.

The fee of rupees five is remitted by postal money-order.

I am,
Sir,
Yours obediently,

Dated.....

Name.....

Present address.....

C/o.....

Village and P. O.....

District.....

CERTIFICATE I.

(This certificate is to be signed by a *Government servant.*)

I certify (1) that the abovenamed candidate..... has not attended any school, recognised or unrecognised, for at least one year previous to the ensuing Matriculation Examination, (2) that he has regularly and diligently prosecuted his studies, (3) that he has been subject to proper discipline and bears a good moral character.

(Signature).....

Designation.....

Date.....

CERTIFICATE II.

(In case of schoolmasters only.)

I certify that Babu.....has been serving in.....School for..... years and bears a good moral character.

Secretary to the.....

.....

District Inspector of Schools,

.....District.

Dated.....

Particulars to be filled in by the candidate.

1. Name of candidate.....

.....

2. Father's name.....

.....

3. Caste or creed.....

4. Residence—

Village.....

Post office.....

District.....

5. Age of the candidate on the 1st March 1937.....

6. Name of school in which the candidate last studied.....

.....

7. The name of the centre at which he intends to appear at the Final Matriculation Examination .....

.....

8. The name of the centre at which he intends to appear at the Test Examination .....

9. Vernacular language from which the translation is to be made into English in the English first paper.....

.....

10. Name of the classical language to be taken as the third subject.....

.....

11. Name of the vernacular language to be taken as the fourth subject.....

.....

12. Additional subjects to be taken up—

(*i*) Additional Mathematics.

(*ii*) Additional paper in the classical language.

(*iii*) History.

(*iv*) Geography.

(*v*) Elementary mechanics.

(*vi*) Hygiene.

N. B.—Any two of the additional subjects are to be retained and the others to be scratched.

Office of the Inspector of Schools, Presidency Division.

40/1A, Free School Street, Calcutta, the 13th July 1936.

NOTIFICATION.

Rules for the guidance of the private candidates for the Test Examination for admission to the Matriculation Examination for 1937.

A Test Examination of private candidates for permission to appear at the Matriculation Examination of the Calcutta University to be held in March 1937, will be held in the Senate Hall, Calcutta, or at any other place, which may be notified hereafter from Thursday, the 26th November 1936, according to the programme annexed hereto.

2. Applications for permission to appear at the Test Examination of private candidates should be made in printed forms only to be obtained *in person* from the office of the Inspector of Schools, Presidency Division. Candidates desirous of appearing at a muffasil centre should obtain forms from the Head Master of the Government School concerned.

3. Private candidates are those who have not attended any school, recognised or unrecognised, imparting general education for at least one year previous to the Matriculation Examination.

4. Private candidates are broadly divided into two groups, viz.—

(A) Candidates coming from within the territorial jurisdiction of the Calcutta University.

(B) Candidates coming from outside the territorial jurisdiction of the Calcutta University who have resided for one year or more in Calcutta or in one of the districts of the Presidency Division.

5. Each of these groups is again subdivided into the following four classes :—

(*i*) Candidates who once read at schools but since leaving them will have been out of school for at least one year up till 1st March 1937.

(*ii*) Candidates who have never read at any school.

(*iii*) *Bona-fide* teachers employed at schools recognised by any University or any Board of Secondary Education.

(*iv*) Teachers employed in other schools, *e.g.*, Primary Schools, Middle Schools, Junior Madrasahs, etc.

6. Every candidate for the Test Examination must produce—

(*a*) An affidavit in the appended form A sworn before a competent authority in Bengal by the candidate's father or his legal guardian (if the father is dead). Two copies of the candidate's photo, one affixed to the affidavit which should be duly attested by the swearer of the affidavit and the Magistrate and the other to be affixed to the application duly attested by the candidate and his father and guardian.

(*b*) If he had previously attended any school a transfer certificate (bearing the school stamp) from the school in which he last read or the admit card if he failed at the last or any previous Matriculation Examination or the Test Examination held by the Inspector of Schools, Presidency Division.

7. Candidates under class (*iii*) of rule 5 are exempt from appearing at the Test Examination. They should apply to the Registrar, Calcutta University, for necessary permission in accordance with the procedure laid down in his Notification No. 283/OUP, dated 15th May 1935.

8. Besides fulfilling the appropriate conditions as laid down for the foregoing three classes a candidate under class (*iv*) of rule 5 must produce a certificate of employment duly signed or countersigned by the District Inspector of Schools of the district.

9. *B group candidates* (*vide* rule 4) *whether ever read in any school or not, shall in addition produce* (*i*) *necessary permission from the University of Calcutta* commonly called migration certificate in terms of its circular No. S/272/O.U.Pri., dated the 16th June 1934, published at page 938, Part IB of the *Calcutta Gazette*, dated the 19th July 1934.

10. Every candidate must attach to his application a copy of the chalan showing the deposit of the prescribed fee at a treasury or sub-treasury in Bengal. (*See* also rule 15.)

11. No candidate under "group A" (*i.e.* Bengali or Assamese), whose father or guardian is not a native or a permanent resident of or permanently employed in any district of the Presidency Division including Calcutta, will be admitted to the Test Examination to be held by or under orders of the Inspector of Schools, Presidency Division.

12. A student, who failed to pass the annual examination for promotion to class X at the end of the year 1935 and then left school, will, in no circumstances, be allowed to appear at the Test Examination of 1936. But a student who failed to pass the Matriculation Examination of the Calcutta University, held in March 1936 will be admitted to the ensuing Test Examination.

13. No candidate who has not completed the period required for reaching class X calculated from the date of his leaving the school and completing one year thereafter will be admitted to the Test Examination.

14. Any candidate desirous of taking up Hygiene for the Matriculation Examination shall submit along with his application a certificate from a registered medical practitioner or a recognised teacher of Hygiene to the effect that the candidate has been undergoing training in that subject under him. The registered medical practitioner should give his registration number for his identification.

15. The admission fee for the examination is Rs. 6 for each candidate to be examined in Calcutta and Rs. 5 for candidates to be examined in other centres. The fee for examination must be deposited into a Government Treasury or Subtreasary in Bengal and the chalan showing the deposit attached to the application (*vide* rule 10). No money order or cheque will be received in this office in payment of fees for the Test Examination. *In no circumstances will this admission fee be refunded.*

16. Admission cards for the Test Examination will be sent *by post.*

17. (*a*) Candidates residing in or within easy reach of Calcutta must appear at the Calcutta Examination centre.

(*b*) Those who reside at out-of-the-way places may, as a special case, be permitted to sit for the Test Examination at the nearest Government High English Schools. Applications from such candidates must be submitted through the head masters of the nearest Government High Schools. *They must, however, fulfil all the requisite conditions laid down in the foregoing rules.* The permission will only be granted if the head masters concerned recommend their cases.

Admission cards of these candidates will be distributed by the respective head masters.

18. The results of the Test Examination will be declared and put up on the notice board of this office on the 4th January 1937.

19. Application forms with forms for depositing fees at the Imperial Bank of India for permission to appear at the Matriculation Examination to be held in March 1937 will be given to and received back from the successful candidates of the Test Examination on the following dates arranged according to their roll numbers at the Test Examination :

7th January Roll Nos. 1 200.

8th January Roll Nos 201 400.

9th January- Roll Nos. 401- 600.

11th January Roll Nos 601 800.

12th January Roll Nos. 801 1000 and above.

Such application form will have to be signed by each successful candidate in the presence of an officer attached to this office.

20. The application form countersigned by this office will be returned to the candidates personally on the following dates : -

14th January –Test Roll Nos. 1—350.

15th January– Test Roll Nos. 351 700.

16th January– Test Roll Nos. 701 and above.

21. Candidates allowed to appear at the Matriculation Examination on passing the Test Examination shall deposit their fees at the Imperial Bank of India on or before 13th January 1937 and a copy of receipt showing the deposit shall be attached to the application.

22. The dates for distribution of University admission cards for the Matriculation Examination will be notified in the office notice board on or about the 24th February 1937. *The admission cards on no account will be sent to candidates by post.* The candidates must produce their admission cards for Test Examination as well as the University receipts showing the deposit of fees to obtain the University admission cards.

23. Candidates successful at the University examination may receive their Matric Pass Certificate on or about the 15th January 1938 but in no case later than the 15th of April 1938 on tending personally or by agent the University admission card. All undistributed certificates will be returned to the Controller of Examinations on the 15th April 1938.

24. Incomplete applications for the Test Examination will be rejected without any reference to the candidates. They should therefore see that complete particulars and documents are furnished. Applications must bear the signatures of the candidates in full. Those which will contain any initial will be rejected.

25. Applications in the prescribed form must reach the office of the Inspector of Schools, Presidency Division, on or before the 31st August 1936.

26. No paper either the application or any of its enclosures will be returned to the candidate after the examination is over.

M. A. JAAFAR,

Inspector of Schools, Presidency Division.

Programme of Test Examination.

Thursday, 26th November—

Morning, 10-30 a.m. to 1 p.m.—English, 1st paper.

Afternoon 2 p.m. to 4-30 p.m.—English, 2nd paper.

Friday, 27th November—

Morning, 10-30 a.m. to 1 p.m.—Compulsory Mathematics.

Afternoon, 2 p.m. to 4-30 p.m.—Vernacular language.

Saturday, 28th November—

Morning, 10-30 a.m. to 1 p.m.—Compulsory Classical language.

Afternoon, 2 p.m. to 4-30 p.m.—Additional Classical language.

Monday, 30th November—

Morning, 10-30 a.m. to 1 p.m.—History.

Afternoon, 2 p.m. to 4-30 p.m.—Additional Mathematics.

Tuesday, 1st December—

Morning, 10-30 a.m. to 1 p.m.—Geography.

Afternoon, 2 p.m. to 4-30 p.m.—Mechanics.

Wednesday, 2nd December—

Morning, 10-30 a.m. to 1 p.m.—Hygiene.

Appendix A.

I.....son of.....an inhabitant of village.....thana.....district.... and now residing at.....by caste..... by profession or occupation.....do hereby solemnly declare—

(1) that.....whose photo is affixed hereto below duly attested is my son/is a son of late.....and a.....of mine and I am his legal guardian.

(2) That he has been residing in Calcutta/at .....district.....since.....

(3) That he is a candidate for the Test Examination of the private candidates to be held by the Inspector of Schools, Presidency Division, for the Matriculation Examination of 1937.

(4) That to my best knowledge and information he was born on.....of 13 B.S. corresponding to.....of the Christian era; his age on 1st March 1937 being calculated to be ..... years.....months.

(5) That he has never read in any school recognised or unrecognised by any University or the Board of Secondary Education or the Education Department of Government since his childhood/since his leaving.....school or appearing at the Matriculation Examination as shown by the Transfer Certificate/Admission card enclosed with the application.

(6) That he has been subject to proper tuition and discipline all along and has made satisfactory progress in studies.

(7) That he bears a good moral character and his conduct is satisfactory.

(8) That the above statements are true to my best knowledge and information.

Appendix B.

Presidency Division.

Test Examination of private candidates for the Matriculation Examination, 1937.

(This application must reach the office of the Inspector of Schools, Presidency Division, on or before the 31st August 1936, after which on no account it will be accepted.)

APPLICATION.

To the Inspector of Schools, Presidency Division.

Sir,

I request permission to present myself at the ensuing Test Examination of the private candidates for the Matriculation Examination of 1937.

I enclose herewith the following papers as required under the rules :—

(here enumerate the documents attached.)

I am,

Sir,

Yours obediently,

(Signature of the applicant.).....

Present address (in full).....

I declare that the annexed particulars are true, that I am a permanent resident of the Presidency Division/permanently employed in the Presidency Division as.....

(Signature).....

Father or legal guardian (if father is dead)

Address.....

Particulars to be filled in by the candidate.

1. Name of candidate.....

2. (*a*) Father's name.....

   (*b*) If father is dead, then also legal guardian's name with relationship .....

3. Caste or religion, nationality.....

4. Permanent residence.....

   (*a*) Village or street.....

   (*b*) Post Office or town.....

   (*c*) District.....

5. Period of stay at the present address.

6. Age of the candidate on the 1st March 1937 and date of birth.....

7. (*a*) Name of the school and the class in which the candidate last studied.....

(*b*) Whether recognised or not at the time of the candidate's attendance.....

8. Date of last attendance in the school whether recognised or unrecognised.....

9. The name of centre at which he intends to appear at the Test Examination.....

10. Name of vernacular for translation (*a*) from and (*b*) to (any of the following) :—

Urdu, Bengali, Hindi.

11. Name of the compulsory second language (any of the following) :—

Arabic, Persian, Sanskrit, Pali, Urdu, Bengali, Hindi.

12. Name of compulsory vernacular (any of the following) :—

Urdu, Bengali, Hindi.

13. Additional subjects to be taken up (any two of the following) :—

(*i*) Additional Mathematics.

(*ii*) Additional paper in a classical language.

(*iii*) History.

(*iv*) Geography.

(*v*) Elementary Mechanics.

(*vi*) Hygiene. (State whether the requisite certificate from a Registered Medical Practitioner or a recognised Teacher of Hygiene is attached) (*vide* rule 14).

N.B.—In items Nos. to the subject or subjects the candidate desires to take up should be retained and the rest scored through. If the vernacular of a candidate is a language not included in the above list he shall have alternative questions in the place of translation in English, 1st paper, and an alternative paper in English Composition for the vernacular (compulsory) paper.

Answers in History, Geography or Hygiene in a script other than English and Bengali will not be accepted at the Test Examination. Non-Bengali candidates must therefore give answers to questions in these papers in English if they are not familiar with Bengali.

No subjects other than those mentioned above will be admissible for examination.

14. The name of the centre at which he intends to appear at the Matric Examination.....
.....

Board of Central Madrasah Examinations, Bengal.

ERRATA.

Calcutta, the 23rd July 1936.

In the list of successful candidates at the Title (Mumtazul Muhaddisin), Fazil (Higher Standard), and Alim (Lower Standard) Examinations held in April 1936, published in the *Calcutta Gazette*, dated the 9th July 1936, on pages 1138 to 1144 :—

Title (Mumtazul Muhaddisin) Examination.

For	*Please read*
Second Division.	Second Division.
Calcutta Madrasah.	Private candidates, Calcutta Madrasah.
Roll No. 31 Abul Kalam Muhammad Irshad Alam Khan Pani.	Roll No. 31 Abul Kalam Muhammad Irshad Alam Khan Pani.
Roll No. 32 Muhammad Noorul Islam.	Roll No 32 Muhammad Noorul Islam.
Roll No. 33 Asaduzzaman.	Roll No. 33 Asaduzzaman.

Fazil (Higher Standard) Examination.

For	*Please read*
Private candidates.	Private candidates.
Third Division.	Third Division.
Barisal Centre.	Barisal Centre.
Roll No. 454 Syed Abul Fazl Muhammad Abdul Jalil Ashrafi. I	Roll No. 454 Syed Abul Fazl Muhammad Abdul Jalil Ashrafi. D.

Alim (Lower Standard) Examination.

For	*Please read*
Private candidates.	Private candidates.
Third Division.	Third Division.
Dacca Centre.	Dacca Centre.
Roll No. 254 Muhammad Mehruullah, A. .. 15-2	Roll No. 254 Muhammad Mehrullah, A. .. 15-2

M. MUSA,

Registrar, Board of Central Madrasah Examinations, Bengal.

Dacca Medical School.

Dacca, the 3rd July 1936.

Admission to the Compounders Class—Session, 1936-37.

Applications for admission to the Compounders Class of the Dacca Medical School will be received from 15th July to 10th August 1936.

Applications should be supported by (*a*) a true copy of certificate of passing the Matriculation or its accepted equivalent, (*b*) a testimonial of good moral character from a Deputy Magistrate or a gentleman of equal position or from the Principal or Head Master of the college or school in which the candidate last studied, (*c*) a certificate of age—Matriculation certificate or a certificate from the head of the institution in which the candidate last studied will also be accepted as evidence of age.

Applications from the candidates must reach the office of the Superintendent between 15th July and 10th August 1936 for registration of their names and they must attend for personal interview on the 17th August 1936, at 8 a.m., in the school, and bring with them the original certificates.

Late or incomplete applications will not be entertained.

Every male student who is selected for admission shall pay an entrance fee of Rs. 4 and first half-yearly instalment of Rs. 12 as tuition fee. He shall also pay annual sports fee of Rs. 2.

R. LINTON, MAJOR, I.M.S.,

Superintendent, Dacca Medical School.

Council of Post-Graduate Teaching in Arts, University of Calcutta.

Asutosh Building, the 2nd June 1936.

B. A. EXAMINATION, 1938.

Linguistics.

Pass Course.

Paper I.—General Principles of Linguistic Science, Growth and Development of Language.

Books recommended—

L. R. Palmer. Modern Linguistics (Macmillan, London, 1935).
Sweet. History of Language (Dent).
Wyld. Historical Study of the Mother Tongue (Murray).

Paper II.—Phonetics : Language Families of the World.

Books recommended—

G. Noël-Armfield. General Phonetics (Fourth Edition, Heffer, Cambridge).
Chatterji, S. K. A Brief Sketch of Bengali Phonetics (International Phonetic Association, University College, London).
Qadri, Mohiuddin. Hindustani Phonetics (Paris, 1930).
W. Ripman. English Phonetics.
Tucker, T. G. Introduction to the Natural History of Language (Blackie): Chapters on the Classification of Language.

Paper III.—The Languages of India.

Books recommended—

Grierson, Sir G. A. Article in the Bulletin of the School of Oriental Studies, London, Volume I, and the Linguistic Survey of India, Volume I, Part I.
S. K. Chatterji. Bānglā Bhāshā-tattver Bhūmikā (Calcutta University).

Honours Course.

Paper I.—Same as for the Pass Course, but in greater detail.

Books recommended (in addition to those for the Pass Course)—

O. Jespersen. Language (George Allen and Unwin).
Article on "Philology" in the Encyclopædia Britannica (11th Edition).
L. Bloomfield. Language (British Edition, George Allen and Unwin, London, 1935).

Paper II.—Same as for the Pass Course, but in greater detail.

Books recommended (in addition to those for the Pass Course)—

Articles on "Accent" and "Phonetics" in the Encyclopædia Britannica (11th Edition).
W. Ripman. Primer of Phonetics, English, French and German.
Daniel Jones. English Phonetics (for reference only).

Paper III.—Same as for the Pass Course, but in greater detail.

Besides the books prescribed for the Pass Course, the students are expected to have a general acquaintance with the volumes of the Linguistic Survey of India dealing with the Indo-Aryan and Iranian Languages.

Paper IV.—Grammar of one of the following Languages treated comparatively and historically.

Books recommended (for 1936 and 1937 also)—

(A) English—H. Sweet—New English Grammar (Oxford); H. C. Wyld—Historical Study of the Mother Tongue (Murray).

(B) Sanskrit—A. Macdonell—A Vedic Grammar for Students (Oxford), to be supplemented by Whitney's Sanskrit Grammar (Ginn).

(C) Pali—E. Muller—Pali Grammar(Kegan Paul); Vidhushekhara Bhattacharya—Pāli Prakāśa.

(D) Persian—Platts and Ranking—A Persian Grammar (Oxford).

(E) Latin—W. M. Lindsay—A Short Historical Latin Grammar (Clarendon Press, Oxford); P. Giles—A Short Manual of Comparative Philology for Classical students—the portions relating to Latin only (Macmillan & Co.).

For Reference—

C. D. Buck. A Comparative Grammar of Greek and Latin (Ginn & Co., Boston).

Paper V.—Texts illustrating the growth of the Language chosen.

Books prescribed (for 1936 and 1937 also)—

(A) English—Old and Middle English—Wyatt—Old English Grammar (for Reference only); Cook—First Book of Old English (Ginn); H Sweet—First and Second Middle English Primers; Wright—Elementary Grammar of Middle English (for Reference only).

(B) Sanskrit—Sanskrit (Vedic), and Pali-Prakrit. Rigveda: Hymns, I—154; II—12; III—59; VII—49, 61, 63, 71, 86 (these are all to be found in Macdonell's Vedic Reader); Woolner—Introduction to Prakrit (Second Edition). Extracts—1-8, 10, 11, 15, 19, 22-26, 28, 31, 32, 34, 35.

(C) Pali.—Sanskrit (Vedic and Classical), and Prakrit. Rigveda: Hymns, IV—51; X—44, 90, 120 (these are all to be found in Macdonell's Vedic Reader): Raghuvamsa, Canto IV; Vikramorvasi (Pandit's Edition). Woolner—Introduction to Prakrit (as in B).

(D) Persian.—Avesta, Old Persian and Pahlavi. Avesta: Taraporewala—Selections from Avesta and Old Persian, I (Calcutta University)—Yasna IX. Old Persian: Behistun Inscription, I. Pahlavi: Arda Viraf Nama, IV.

(E) Latin.—Friedrich Stolz—Geschichte der Lateinischen Sprache—the Latin Inscriptions only (Sammlung Goeschen, Leipzig); Platus—Rudens.

Paper VI.—A cognate or connected language (Easy Texts including Elementary Grammar).

Books prescribed (for 1936 and 1937 also)—

(A) With English:—German or French.

German: Hauff—Die Karawane (Cambridge), first three stories.
French: Guy de Maupassant—Six Contes (Cambridge), first three stories.

(B) With Sanskrit either Avesta and Old Persian or Greek.

Avesta: Yasna IX; Old Persian: Behistun Inscription, Column I.
Greek: Beresford and Douglas—A First Greek Reader (Blackie).

(C) With Pali:—Ancient Indian Vernacular Texts (either Early Bengali or Early Hindi):—

Early Bengali: Bauddha Gan O Doha: Caryas by Kanhapada.
Srikrishna Kirttana—Vamsi-khanda.
Early Hindi: Apabhramsa Verses as in Hemachandra's Prakrit Grammar (verses 1—100); Typical Selections from Hindi Literature, Vol. I (Calcutta University), pages 15-38, and pages 40-49.

(D) With Persian: either Sanskrit or Arabic.

Sanskrit: C. U. Matriculation Course (the following:—Hitopadesa, First Four Stories; and Nalopakhyana, verses 1-30)
Arabic: Thornton and Nicholson—Elementary Arabic First Reading Book.

(E) With Latin: either Sanskrit, or Greek. Texts as for Group D or B.

S. N. MITRA, *Secretary (offg.).*

Council of Post-Graduate Teaching in Arts, University of Calcutta.

Asutosh Building, the 2nd June 1936.

B.A AND B.Sc. EXAMINATIONS, 1938

Anthropology.

Pass.

Paper I.

Physical Anthropology (including prehistory).

Physical Anthropology position of man in the animal kingdom—origin and evolution of man—early types of man—their distribution and culture with special reference to Palaeolithic and Neolithic civilisations.

A brief outline of the principles of anthropometry.

Racial criteria —influence of environment— a general survey of the different races of mankind Racial history of Asia and Europe with special reference to India. A brief ethnological consideration of typical primitive tribes of India (*e.g.*, Andamanese, Vedda Toda, Kadir, Gond, Bhil, Oraon, Santal, Khasi, Ao, Naga).

Books recommended

A. C Haddon. Races of Man.
G Elliot Smith. The Search for Man's Ancestors.
L. S B Leaky. Adam's Ancestors.

Paper II.

General and Social Anthropology.

Material culture and economic pursuits of primitive men food collecting, hunting, fishing, domestication of animals and pastoral life hoe-culture and agriculture —primitive decorative art, music and dancing primitive habitations and personal adornment

A general scheme of social organisation tribe, clan, family, marriage, association.

Early religion and magic mythology, beliefs, rituals and ceremonials

To be studied with special reference to peoples of rude culture in India as far as possible.

Books recommended

W. H. R. Rivers. Social Organisation.
Haddon. Magic and Fetishism.
G Elliot Smith. In the Beginning
N. Bose Cultural Anthropology.
Horniman Museum Handbooks to Weapons and the Evolution of Domestic Arts

Paper III.

Practical (as per syllabus).

Honours.

Papers I and II.

(As in Pass)

Additional Books recommended—

Goldenweiser. Early Civilisations.
Chakladar Giufrida Ruggeri First Outlines of Races of Asia.
B N. Dutt. Races of India (Journal of Department of Letters, Vol. XXVI).

Paper III.

(Advanced Physical Anthropology.)

A detailed study of the Neanderthal and Upper Palæolithic races and their geographical distribution and culture.

A detailed study of prehistory specially of Chalcolithic, Copper, Bronze and Iron Age cultures with special reference to India.

A brief racial history of Africa, America and Oceania.

A brief ethnological consideration of some typical non-Indian primitive tribes (Hottentot, Baganda, Semang, Iroquois, Tasmanians, Arunta, Eskimo).

Books recommended—

Osborn. Men of the Old Stone Age.

P. Mitra. Prehistoric India.

Haddon. Races of Man.

Mackay. The Indus Civilisation.

G. Daryll Forde. Habitat, Economy and Society.

Paper IV.

(Advanced Social Anthropology.)

A detailed study of social organisation—kinship system—genealogical method—cross-cousin marriage—dual organisation and marriage classes.

Primitive Law—succession, descent, inheritance in matriarchal and patriarchal communities in India—administration of justice—tribal law and the growth of moral ideas.

Primitive Government—central and local authority—sacred and secular offices—inherited rank and elected offices—village councils—chiefs and confederacies—inter-tribal relations.

Primitive Economics—organisation of primitive industries—distribution, exchange and commerce in primitive communities—distribution of wealth—private and collective ownership—barter, exchange—mediums and the development of currency—economic adjustments in a primitive tribal village in contact with higher cultures.

Principles of Cultural origin and diffusion.

Books recommended—

P. Radin. Social Anthropology.

Wissler. Man and Culture.

G. Elliot Smith. In the Beginning.

G. U. Sayce. Primitive Arts and Crafts.

Papers V and VI.

Practical as per syllabus.

S. N. MITRA, *Secretary (offg.)*.

Council of Post-Graduate Teaching in Arts, University of Calcutta.

Asutosh Building, the 2nd June 1936.

B.COM. EXAMINATION, 1938.

Compulsory Papers.

(1) English Composition.

(2) The following languages are specified for the present for the B. Com. Examination :—

(1) Bengali, (2) Assamese, (3) Hindi, (4) Urdu, (5) Japanese, (6) French, (7) German and (8) Italian.

(3) Accountancy.

Cropper. Book-keeping and Accounts.

For reference :-

Carter. Advanced Accounts.

(4) Commercial Law.

Sen and Bannerjee. Principles of Indian Mercantile Law.
Indian Contract Act.

Group A.

(5) General Economics.

Seligman. Principles of Economics. (Chapters on Money and Banking.)
Gay. Economics : An Introduction for the General Reader.

(6) Indian Economics.

P. N. Banerjea. Study of Indian Economics.

For reference :

Goyajee. Indian Currency System.
Baden Powell. Land Revenue in British India.
Reports of the Central Banking Enquiry Committee and the Bengal Provincial Banking Enquiry Committee.
Jathar and Beri. Indian Economics.

Group B.

(7) Business Organisation.

Davar. Business Organisation.
Report of the Central Banking Enquiry Committee (Chapter XVII).
Stephenson. Principles and Practice of Commerce.

(8) Commercial Geography.

The Oxford Economic Atlas by Bartholomew, with introduction by Lyde (Revised edition).
Dudley Stamp. Intermediate Commercial Geography, Part I (1934); Part II (1933).
McFarlane. Economic Geography (1933).

Group C.

Optional Papers.

Any one of the following :-

(1) Advanced Accountancy.

Carter. Advanced Accounts.
Batliboi. Advanced Accounts.

Auditing.

De Paula. Principles of Auditing.
Spicer and Peglar. Practical Auditing.

The following Case Laws are prescribed :—

(*a*) Lee *v.* Neuchatel Asphalte Co., Ltd.
(*b*) Wilmer *v.* Mcnamara & Co., Ltd.
(*c*) Bolton *v.* Natal Land Colonisation Co., Ltd.
(*d*) Foster *v.* The New Trinidad Asphalte Co., Ltd.
(*e*) *In re* The Kingston Cotton Mill Co., Ltd.
(*f*) *Re* City Equitable Fire Insurance Co., Ltd.

(*2*) *Trade and Tariff.*

Cotton. Handbook of Commercial Information for India.
Review of the Trade of India (latest issue).
Report of the Bengal Provincial Banking Enquiry Committee (Chapters VII, VIII and X).
Stephenson. Principles and Practice of Commerce.
Higginson. Tariffs at Work.
Banerjea, P. N. Fiscal Policy in India.
Report of the Indian Fiscal Commission.
Delle Donne. European Tariff Policies.

Transport.

Acworth. Elements of Railway Economics.
Acworth Committee's Report.
S. C. Ghosh. Indian Railway Problems.
Mehta, N. B. Indian Railway rates and development.
Douglas Knoop. Outlines of Railway Economics.
T. R. Hare. British Railway Operation.
Tevelon. Economics of Road Transport.

For reference—

Desney. Laws of Carriage.
Lahiri. Laws of Carriers.
Administration Report on Indian Railways (latest issue).

(*3*) *Banking and Currency.*

Robertson. Money.
Weston. Banking and Currency (University Tutorial Press).
Withers. Meaning of Money.
Tannan. Banking Law and Practice in India.
Coyajee. Indian Currency System.
Keith, Le Cheminant. Foreign and Colonial Banking Systems.

For reference—

Bradford. Money.
Reports of the Indian Currency Commissions and Committees.
Report of the Central Banking Enquiry Committee.
Report of the Bengal Banking Enquiry Committee.

(*4*) *Statistics and Insurance.*

King. Elements of Statistics.
Bowley. Elementary Manual of Statistics.
Boddington. Statistics and their Application to Commerce.
Rhodes. Elementary Statistical Method.
Leigh. Guide to Life Assurance.
Brook. Fire Insurance Principles and Practice.
Templeman. Principles and Practice of Marine Insurance.
Banfield. Principles and Practice of Accident Insurance.
Provident Insurance Societies Act, 1912, and Rules.
Indian Insurance Companies Acts, 1912 and 1928, and Rules.

For reference—

Statistical Abstract of British India (latest issue).

(5) *Public Administrations.*

Strong. Modern Political Constitutions.
Jenks. British Empire.
D. N. Banerjee. Indian Constitution.
Keith. Dominion Autonomy in Practice.
Eddy and Lawton. The New Constitution of India.

For reference—

Report of the Joint Parliamentary Committee.

Public Finance.

Banerjea. Provincial Finance in India.
Dalton. Public Finance.
Report of the Taxation Enquiry Committee (Chapter VI to IX).
Wattal. Financial Administration in British India.
Hawtrey. The Exchequer.

(6) *Land Systems.*

Ascoli. Early Revenue History of Bengal.
Baden Powell. Land Revenue in British India.
Mookerjee. Land System in India.

Agricultural Economics.

Carver. Introduction to Rural Economics.
Hough. Co-operative Movement in India.
Report of the Royal Commission on Agriculture (Chapters I, II, IV and XI).
Review of Agricultural Operations in India (latest issue).

(7) *Economic History.*

Briggs. Economic History.
Gadgil. Industrial Evolution in India.
Report of the Royal Commission on Indian Labour.

For reference—

J. C. Sinha. Economic Annals of Bengal.
R. C. Dutt. India under Early British Rule.
R. C. Dutt. India in the Victorian Age.

Modern Industrial Organisation with Special reference to India.

Robinson. Structure of Competitive Industry.
Robertson. Control of Industry.
Report of the Indian Industrial Commission (1916-18).
A Study of Jute, Cotton and Iron Industries in India.
Large Industrial Establishment in India (latest edition).
Report of the Royal Commission on Labour.
Students are recommended to consult Reports and Government Publications.

For reference—

Report of the Balfour Committee.
Chaudhuri. The Evolution of Indian Industries.
Loknathan. Structure of Indian Industries.

S. N. MITRA, *Secretary (offg.).*

Council of Post-Graduate Teaching in Arts, University of Calcutta.

Asutosh Building, the 2nd June 1936.

M. A. EXAMINATION, 1938.

English.

Common papers for Groups A and B.

Paper I.

1. (*a*) *General History of English Literature.*

The following outlines, not meant to be exhaustive, are given as an indication of the topics and authors requiring particular attention.

I.—Old English Literature.

The Anglo-Saxon Conquest. Racial Characteristics.
Old English Heroic Poetry. *Beowulf.*
Old English Personal Poetry.
Conversion of the Anglo-Saxons: its influence on literature. Caedmon. Cynewulf and his school.
Old English Porse. Alfred. *Anglo-Saxon Chronicle.*
Decay of Old English Literature; Later heroic verse.

II.—Middle English Literature.

The influence of the Norman Conquest.
Main Currents in Middle English Literature.
Old Tradition. Mediaeval Christianity. Scholastic Philosophy. Norman Chivalry. Latin, Celtic and Saracen influences. French influence.
Characteristic works: Jeoffrey's *Historia*, Orm's *Ormulum*, Layaman's *Brut, Ancren, Riwle, The Owl and the Nightingale.*
The Metrical Romance. The Arthurian Legend. The Allegory. Fourteenth Century Alliterative Verse. *Piers the Plowman.*
Chaucer and his school. Stagnation after Chaucer. Scottish Poets
Origins of the English Drama.
Middle English Lyrics. Vallads.
Origins of English Prose. Wycliffe. Mandeville. Malory.

III.—Elizabethan Literature.

The Renaissance. The Reformation. Translation of the Bible.
Classical and continental influences. The Translations. New prose and peotic forms. The Pastoral Convention.
Poetry: Wyatt and Surrey. Tottel's *Miscellany*: Elizabethan *Miscellanies* and *Song Books*. Sonnets. Satire. *A Mirror for Magistrates.* Spencer. Metaphysical Poetry. Donne. Caroline Poetry. Milton.
Prose: Chronicles and Travels. Pamphlets, Prose Romances and Novellas. Sidney. Lyly: Euphuism. Bacon. The Theologians. Hooker Jeremy Tylor. Sir Thomas Browne, Burton. Milton.
The Drama. First Regular Tragedy and Comedy. Classical Influence. The Elizabethan Stage.
Shakespeare's precedessors. Lyly. Marlowe.
Shakespeare.
Elizabethan Drama. Ben Jonson. Webster. Beaumont and Fletcher. Decay of Elibzabethan Drama. Ford.

IV.—Restoration and 18th Century Literature.

French Influence. Pseudo-Classicism.
Social Changes. Condition of Authorship.
Poetry. Satiric and Didactic Poetry. The Heroic Couplet.
Dryden. Samuel Butler. Pope. Gray.
Prose: Rationalistic Movement. The Royal Society.
Criticism.

The Periodical and the Essay. The Novel. Letters and Diaries. History.
John Bunyan. Locke. Dryden. Addison. Steele. Swift Defoe. Richardson. Fielding. Smollet. Sterne. Goldsmith.
Johnson. Burke. Hume. Gibbon. Boswell.
The Drama: Heroic Tragedy Dryden. Otway.
Restoration and 18th Century Comedy. Congreve. Sheridan Goldsmith.

V.—Romantic Revival.

Return to Nature. Return to the Past. Renaissance of Wonder
The French Revolution.
The Transcendental Movement.
Mediaevalism.
Changes in Poetic forms. Lyrical Revival.
Precursors: Thomson. Gray. Collins. Cowper. Blake. Burns. Percy's *Reliques*.
Poetry: Scott. Wordsworth. Coleridge. Byron. Shelley. Keats.
Prose: Criticism, Old and New. The Reviewers. Coleridge Hazlitt.
The Essay; Lamb. DeQuincy. Landor.
The Novel. Romances of Terror and Mystery. The Historical Novel. Scott. Austen.

VI. Victorian Literature.

The Democratic Movement. The Utilitarian Movement. Aesthetic and Spiritual Reactions. The Scientific Movement. Conflict between Science and Religion.
Poetry: Tennyson. Browning. Mrs. Browning. The Pre Raphaelites. Matthew Arnold. Swinburne.
Prose: Carlyle. Ruskin. The Oxford Movement. Newman.
J. S. Mill. Macaulay. Froude. Matthew Arnold.
The Novel: Dickens. Thackeray. Charlotte Bronte. George Eliot. Stevenson. Meredith. Hardy.

VII. Post-Victorian Literature.

The Propagandist Note. Continental Influences.
Poetry. The Victorian Tradition. The Celtic Movement. Yeats. Kipling
The Novel. H. G. Wells. Conrad. Arnold Bennet.
The Drama: Bernard Shaw. Galsworthy.
The Essay: Criticism. Journalism.

The following text-books are recommended for study as indicating the standard of knowledge to be expected from the candidates:

(*a*) ***For preliminary readings.***

A Primer of English Literature by Stopford Brooke (Latest Edition).

(*b*) ***For general knowledge.***

A Short History of English Literature (Saintsbury).
A History of Engish Literature (Crompton Rickett).
A History of English Literature (Legouis and Cazamian).

(*c*) ***For a more detailed study of Periods and Movements***

Hand-books of English Literature (The Age Serise), edited by Prof. Hales.
History of English Literature in 6 Volumes (Published by Macmillan & Co.).
English Literature during the last half Century (J. W. Cunliffe).
English Literature, 1880-1895 (Kennedy).

(*d*) ***For consultation and reference***

The Cambridge History of English Literature
A History of English Poetry (Courthope).
The Channels of English Literature (published by J. M. Dent & sons).

(e) *For first-hand study of the more important authors—*

Ward's English Poets, 5 Volumes.
Crik's English Prose, 5 Volumes.
Mermaid Series of English Plays (Ed. Havelock Ellis).
Oxford Treasury of Prose and Verse.

1. (b) *History of the English Language (for "A" Group students).*

The Indo-European Speech Family—The Germanic Branch—Place of English in this Branch—Periods in the History of the English Language with their characteristics—Old English, Middle English and New or Modern English.

Modern English Sounds and Orthography—Outline History of the English Sounds and Inflexions in the Old, Middle and New English periods.

The Vocabulary of English—The Native Elements The Foreign Elements- English Semantics.

Book prescribed—

O. F. Emerson. The History of the English Language (Macmillan).

Or

1. (b) *Principles of Criticism (for "B" Group students).*

Literature as interpretation of life. Types of Literature; The Epic; The lyric; The Drama; The Novel. Minor Types. Form and Matter of Literature. Schools of Criticism; Classicism and Romanticism. Art and Morality. Literature and Science. Personality in Literature. Literature and Environment.

Book prescribed—

Hudson. Introduction to the Study of Literature.
Worsfold. Judgment in Literature.

Paper II—Drama.

Shakespeare. Henry IV, Part II. Antony and Cleopatra. The Winter's Tale.
Ben Jonson. Every Man in his Humour.
M. Arnold. Merope.

Paper III—Poetry.

Chaucer. Prologue to the Canterbury Tales, and the Nonne Prestes Tale.
Massingham. 17th Century Lyrics (selected pieces—G. T. S.) :—

(All the poems of Joseph Beaumont, Alexander Brome, Richard Brome, Robert Burton, Thomas Carew, Abraham Cowley, Richard Crashaw, John Donne, John Fletcher, Fulke Greville (Lord Brooke), William Habington, George Herbert, Lord Herbert, King, Richard Lovelace, Andrew Marvell, Francis Quarles, Sir John Suckling, Thomas Traherne, Henry Vaughan, James Shirley, Edmund Waller, Izaak Walton, George Wither: and the anonymous pieces numbered 327, 329, 337, 369, 376, 381, 382, 385, 391 and 396.)

Dryden. Absalom and Achitophel.
Tennyson. In Memoriam.
Robert Bridges. Shorter Poems. (Oxford).

Paper IV—Prose.

Sir T. Browne. Religio Medici.
Burke. French Revolution.
Arnold. Culture and Anarchy.
Carlyle. Sartor Resartus.

Group A.

Papers V, VI and VII.

Three papers to be chosen out of the following five of which at least two shall be from the first three.

(a) *Selected period of Drama.*

Elizabethan Drama.

The undermentioned authors are recommended for special study in their chief works as specified below ; but candidates will not be expected to show a detailed knowledge of the texts named :—

Marlowe. Tamburlaine. Dr. Faustus. Edward II.
Kyd. The Spanish Tragedy.
Shakespeare. Romeo and Juliet, Richard III, Julius Caesar, Ling Lear, Hamlet, As You like it, Winter's Tale, Henry IV.
Ben Jonson. Every Main in his Humour, Sejanus, Volpone.
Beaumont and Fletcher. Philaster, The Knight of the Burning Pestle, Maid's Tragedy.
Webster. Duchess of Malfi.
Dekkar. The Shoemaker's Holiday.
Haywood. A Woman Killed with Kindness.
Ford. The Broken Heart.

(*b*) *Selected Period of Poetry.*

Early Nineteenth Century Poetry (1798-1832).
The undermentioned authors are recommended for special study in their chief works as specified below ; but candidates will not be expected to show a detailed knowledge of the texts named :—

Wordsworth. Prelude, Books I, II, XI, XII, XIII ; Excursion, Book I. Slections (G. T.S.).
Coleridge. Selections by Stopford A. Brooke (Golden Book of Coleridge—Dent).
Byron. Vision of Judgment, Siege of Corinth, Manfred, Childe Harold's Pilgrimage, Don Juan (Books I and III).
Shelley. Prometheus Unbound, Alastor, Epipsychidion. The Witch of Atlas, Adonais, Selections (G. T. S.).
Keats. Hyperion, Eve of St. Agnes, Lamia, Isabella, Odes. Selections (Macmillan, English Literature Series).
Golden Treasury of Songs and Lyrics (Palgrave), Book IV.
Selections from English Poets edited by Ward, Vol. IV.

(*c*) *Selected Period of Prose.*

Victorian Prose (1835-1870).
The undermentioned authors are recommended for special study in their chief works as specified below ; but candidates will not be expected to show a detailed knowledge of the texts named :—

Carlyle. Essays, Critical and Miscellaneous—Scott ; Heroes and Hero Worship ; Past and Present.
Ruskin. Readings from Modern Painters (Nelson's Classics, extracts from Volumes II, III and IV), Unto the Last, The Crown of Wild Olive.
Mathew Arnold. Essays in Criticism (1st series), Culture and Anarchy.
Macaulay. Historical and Critical Essays—Southey's Edition of the Pilgrim's Progress ; Boswell's Life of Johson ; William Pitt, Earl of Chatham (two Essays).
Newman. Selections from Newman (Longmans, Green and Co.).
Dickens. Pickwick Papers ; David Copperfield ; A Tale of two Cities.
Thackery. Vanity Fair ; Newcomes ; Esmond.
George Elliott. Adam Bede ; Mill on the Floss ; Romola.
C. Bronte. Jane Eyre.
Mill. Utilitarianism.

(*d*) *Foreign Classics in Translation to be studied in relation to English Literature.*

The undermentioned authors are recommended for special study in their chief works as specified below : but candidates will not be expected to show a detailed knowledge of the texts named :—

Æschylus—(1) Prometheus Bound, (2) Agamemnon, (3) Chœphoræ, (4) Eumenides.
Sophocles—(5) Oedipus the King, (6) Oedipus at Colonus, (7) Antigone, (8) Ajax, (9) Electra.
Euripedes—(10) Alcestis, (11) Medea, (12) Iphigenia in Tauris, (13) Electra.
Seneca—(14) Agamemnon.

(c) *History and Principles of Criticism (including a general study of literary types).*

For reference only—

Saintsbury. History of Criticism (in one volume).
Wylie. The Evolution of English Criticism.
Upham. The Typical Forms of English Literature.
Worsfold. Principles of Criticism.
Hudson. An Introduction to the Study of Literature.

Books prescribed—

Plato. On Poetic Inspiration (Everyman) Ion. Phoedras.
Aristotle. Poetics (Byewater) with an introduction by Gilbert Murray.
Sydney. An Apologie for Poetry.
Dryden. The Essay of Dramatic Poesy and its Defence.
Wordsworth. Prefaces and Appendices (Oxford Edition).
Coleridge. Biographia Literaria (exluding chapters 5-9, and 12).
Shelley. Defence of Poetry.
Arnold. Essays in Criticism (Selected Essays)—The Study of Poetry, Milton, Wordsworth, The Function of Criticism at the Present Time.
Oscar Wilde. Intentions.

Group B.

Papers V, VI and VIII.

Three out of the following five courses, of which at least two must be form the first three :—

(a) *Old English and Grammar.*

Sweet. Anglo-Saxon Reader (omitting pieces XII, XXVIII, XXX-XXXIV).
Sievers and Cook. Old English Grammar (Ginn).

(b) *Middle English.*

Morris, Specimens of Early English, Part I (omitting pieces III, IV, XI, XIII, XVII, XVIII).
Morris and Skeat. Specimens of Early English, Part II (omitting pieces I (B), II, VI, VIII, IX, XIII, XVII (B) and XIX).
Chaucer. Parlement of Foules. Prologue to the Legend of Good Women ; The Legends of Cleopatra. Thisbe and Dido ; The Knightes Tale ; Troilus and Criseyde, Books I and II.

(c) *Teutonic Philology.*

Germanic Philology by R. Loewe tr. by J. D. Jones (George Allen and Co., London).
J. Wright. Old English Grammar (Oxford U. P.).
H. C. Wyld. A Short History of English (Murray).
Morris. Outlines of English Accidence (Macmillan).
Kellner. Historical English Syntax (Macmillan).
Greenough and Kitteridge. Words and their Ways in the English Speech.

For reference—

Skeat. Principles of English Etymology. 2 Vols. (Oxford).
Oliphant. Old and Middle English, Modern English (Macmillan).

(d) *Early German and French Classics.*

(*i*) The Poetic Edda—Bellows (American Scandinavian Foundation).
(*ii*) The Saga of the Volsungs. Tr. Morris (Scott Library).
(*iii*) The Nibelungen Lied. Tr. Margaret Armour (Everyman).
(*iv*) Chanson de Roland. Tr. Scott Moncrieff (Chapman and Hall).
(*v*) Aucassin and Nicolette, with other Medieval Stories. Tr. Eugene Mason (Everyman).
(*vi*) Crestien de Troyes. Eric and Enid, etc. Tr. Eugene Mason (Everyman).
(*vii*) French Mediaeval Romances. Tr. Eugene Mason (Everyman).

For reference--

O. Jiriczek. Northern Hero Legends (Temple Cyclopaedic Primer).
Kaufmann. Northern Mythology (Temple Cyclopaedic Primers).
Craigie. Icelands Sagas (Cambridge Manuals).
Gaston Paris. Medieval French Literature (Temple Cyclopaedic Primers).
W. P. Ker. Epic and Romance (Macmillan).
Chadwick. The Heroic Age (Cambridge University).
W. P. Ker. The Dark Ages (Periods of Literature Series— Blackwood).
Saintsbury. The Flourishing of Romance and Allegory (Period of Literature Series- Blackwood).

(*e*)

(*i*) Gothic –Wright. Grammar of the Gothic Language with selected texts (Oxford).

Or

(*ii*) Old Norse Sweet. Icelandic Primer with selected texts (Oxford).

Or

(*iii*) Old High German—Wright. Old High German Primer (Oxford).

Paper VIII.

Essay or Essays on subjects connected with the course.

" In one of the first three papers (*a*), (*b*) and (*c*) in Group A and of the first two (*a*) and (*b*) in Group B, the Method of teaching and the questions set shall be such that candidates may concern themselves either with literature or with life and thought "

Sanskrit.

The course shall include the following :—

(The books prescribed for the first four papers are common to all the groups)

Paper I.

(*a*) Ashtaka I of the Rig-Veda, with Sāyana's commentary thereon.
(*b*) Sāyana's Introduction to his commentary on the Rig-Veda.

Paper II.

Siddhanta Kaumudi (whole) : A general knowledge of the Panini system as in the Siddhānta Kaumudi and a special study of the following prakaranas : Strityа, Taddhita, Lakārārtha, Karma-kartri-vāchya, Bhāva-vachya and Krit

Paper III.

(*a*) and (*b*) Elements of Comparative Philology with special reference to the Indo Iranian Languages and the growth of the Prakritic dialects.

Syllabus in Comparative Philology :-

(*a*) General Principles :– (*i*) Phonetic Elementary, (*ii*) Principles of linguistic change, (*iii*) Phonetic, morphological and synthetic, (*iv*) Elementary semantics, (*v*) Classification of languages.

(*b*) The Indo-European Family Indo-Iranian Branch, Historical development of Sanskrit -Vedic and Classical sounds, inflexions and word-order in the vocabulary of Sanskrit

The following books are recommended :—

Macdonell, A. A. Vedic Grammar for Students (Oxford).
*Uhlenbeck, C. C. A Manual of Sanskrit Phonetics (Luzac).
*Gune. Introduction to Comparative Philology (Poona).
*Taraporewala, I J. S. Elements of the Science of Language (Calcutta University)

*Candidates are required to possess a thorough acquaintance with the books marked with an astorisk.

For reference only—

Whitney. Sanskrit Grammar.
Dr. Prabhatchandra Chakravarti. Linguistic Speculation of the Hindus (Calcutta University).

(*c*) Sabda-Sakti-Prakasika :—The following portion only of Sabda-Sakti-Prakasika—

Karikas Nos. 2, 3, 4, 12-14, 16-18, 20, 29, 31, 33, 54, 56, 58, 60, 61, 66, 67 and 95.

Paper IV.

Two essays—(*a*) dealing with some subject connected with the history of Sanskrit literature generally ; (*b*) dealing with some subject connected with the history of the special department covered by the group taken up.

Papers V, VI, VII and VIII.

One of the following groups to be selected by the candidate :—

A.—Literature.

Paper V.—(*a*) Poetry Text : Naishadha Charita, Cantos I and XVII.

Kāmandakiya Nitisāra, Chapters 8, 9, 10 and 11 (pages 37-62) (Jivananda's edition).
Sukra Nitisara, Book II.
Mahābhārata—Sāntiparvan, Rājadharma, Chapters 56-60, 68, 69, 86, 88 (Pratap Ray's edition).
Sisupālavadha, cantos 14, 15, with Mallinātha's Commentary.

(*b*) Translation from English into Sanskrit.

Paper VI.—(*a*) Drama Texts : Vikramorvasi, Mrichhakatika, Venisamhāra, Karpuramanjari, Mālati-Mādhava, Vararuchi's Prākrita Prakāsa, as is necessary for the appreciation of the Prakrit passages.

(*b*) Translation from English into Sanskrit.

Paper VII.—(*a*) Prose Texts : Subandhu's Vāsavadattā, Harsacharita, Chapters 5 and 6.

(*b*) Unseen passages in Sanskrit Prose for translation into English.

Paper VIII.—(*a*) Rhetoric and Prosody, namely, Kavyaprakāsa, Ekāvali, Sarasvati-kanthābharana, Sāhitya-Darpana and Chhandomanjari.

(*b*) Unseen passages in Sanskrit Poetry for translation into English.

B.—Vedas.

Paper V.—Yāska's Nirukta and Pingala's Chandassutras with Halāyudha's Vritti, Pratisakhya of the Rig-Veda with the commentary of Uvata.

Paper VI.—(*a*) Aitareya Brahmana with Sāyana's commentary.

(*b*) Simple unseen passages in Vedic Sanskrit for translation into classical Sanskrit.

The Interpretation of any recognised Indian School will be accepted.

Paper VII.—(*a*) Brihadāranyaka Upanishad, Chapters III and IV, Chhāndogya, Chapters V, VI, VII and VIII with Sānkara-bhāshya.

(*b*) Simple Sanskrit unseen passages from any Upanishad for translation into English.

Paper VIII.—(*a*) Grihya Sutras—Gobhila, with commentary.

(*b*) Translation from English into Sanskrit.

C.—Mimamsa and Smriti.

Paper V.—(*a*) Mimāmsā-Sutra with Sabara Bhāshya, first three Chapters.

(*b*) Simple unseen Sanskrit passages from any treatise or commentary on the Mimāmsā Philosophy, such as the Sloka-Vārttika and the Tantra-Vārttika for translation into English.

For reference only—

Dr. Pashupatinath Sastri—Introduction to the Purva Mimamsa.

Paper VI.—(*a*) Jaiminiya Nyāyamālā-vistara and Mimāmsā Nyāya-prakāsa.

(*b*) Simple unseen Sanskrit passages from any treatise or commentary on the Mimāmsā Philosophy, such as the Mimāmsā-Bālaprakāsa and the Tuptikā for translation into English.

Paper VII. (*a*) Manu Samhitā with Kulluka's Commentary.

Dharma-Sutras of Āpastamba and Gautama with Haradatta's Commentary.

(*b*) Grihya-Sutras. Gobhila.

Paper VIII.- (*a*) Yājnavalkya, Samhitā with Vijnāneswara's Mitāksharā.

Parāsara's Institutes with Mādhava's Commentary.

(*b*) Translation from English into Sanskrit.

D. -Vedanta.

Paper V. (*a*) Vedāntasāra (Jacob's edition), Panchadasi, Vedānta-Paribhāshā, Hastāmalaka (with commentary), and Siddhāntalesa

(*b*) Simple unseen Sanskrit passages from any work on Vedanta Philosophy such as Vivaranapramoya-Samgraha for translation into English.

Paper VI.—(*a*) Vedānta-Sutra with Sankara Bhāshya

(*b*) Translation from English into Sanskrit.

Paper VII. -(*a*) Sribhāshya (first four aphorisms).

(*b*) Advaita-Brahma-Siddhi.

Paper VIII.—(*a*) Bhagavadgitā with Sankarabhāshya ; Chhāndogya-Upanishad, Chapter VI ; Brihadāranyaka, Chapters III, IV ; Katha and Māndukya Upanishads, each with Sankara's Commentary.

(*b*) Passages for translation into English from the Anubhāshya and the Saivabhāshya.

E -Sankhya and Yoga.

Paper V.—(*a*) Sānkhya-Sutras of Kapila with Vritti of Aniruddha, Sānkhya-Karika of Isvara Krishna with Bhāshya of Gaudapada.

(*b*) Simple unseen Sanskrit passages from any treatise or commentary on the Sānkhya Philosophy for translation into Sanskrit.

Paper VI.—(*a*) Sānkhya-Pravachana Bhāshya, Sānkhya-Sāra and Sānkhya Tattvakaumudi.

(*b*) Translation from English into Sanskrit.

Paper VII.—(*a*) Yoga-Sutras of Patanjali with Bhāshya of Vyāsa and Vritti of Bhoja, Yoga-Vārtika of Vijnāna Bhikshu.

(*b*) Simple unseen Sanskrit passages from any treatise or commentary on the Yoga Philosophy for translation into English.

Paper VIII.—(*a*) Yogavāsistha, Chapter on Vairāgyaprakarana, Sarvadarsana-Samgraha.

(*b*) Translation from English into Sanskrit.

F.—Nyaya and Vaiseshika.

Paper V.—(*a*) Nyāya Sutras of Gautama with Bhāshya of Vātsyāyana Vārttika of Uddyotakara and Vritti of Visvanātha.

(*b*) Simple unseen Sanskrit passages from any treatise or commentary on Nyāya Philosophy for translation into English.

Paper VI.—(*a*) Nyāyamanjari of Jayanta Bhatta, Khandanakhanda-khādya of Sriharsha, Chapter I before the topic (Advaite kim mānam).

(*b*) Translation from English into Sanskrit.

Paper VII.—(*a*) Bhāshāparichcheda with Siddhāntamuktāvali, Kusumānjali of Udayanācharya with the commentary of Ruchidatta and the gloss of Vardhamāna.

(*b*) Translation from English into Sanskrit.

Paper VIII.—(*a*) Vaiseshika Sutras of Kanāda, with Bhāshya of Prasastapāda, Nyāyakandali of Sridhara, and the Vritti of Jayanārāyana, Saptapadarthi of Sivaditya with commentary of Yatindra Madhava.

(*b*) Simple unseen Sanskrit passages from any treatise or commentary on Vaiseshika Philosophy for translation into English.

G.—General Philosophy.

Paper V.—(*a*) Sānkhya Sutras of Kapila with Vritti of Aniruddha, Sānkhya-tattva-Kaumudi. Yoga-Sutras of Patanjali with the Bhāshya of Vyāsa and Vritti of Bhoja.

(*b*) Simple unseen Sanskrit passages from any work on Philosophy for translation into English.

Paper VI.—(*a*) Nyāya Sutras of Gautama with Bhāshya of Vatsyāyana and Vritti of Visvanātha. Vaiseshika Sutras of Kanāda with Bhāshya of Prasastapāda and Nyāya-kandali of Sridhara.

(*b*) Translation from English into Sanskrit.

Paper VII.—(*a*) Vedantasāra (Jacob's edition). Bhagavadgitā with Sankara-bhāshya, Vedanta Sutra with Sankara's Commentary, Chapter I, Parts I and IV, Chapter II, Part II.

(*b*) Translation from English into Sanskrit.

Paper VIII.—(*a*) Nyayaratnamālā of Pārthasarathi Misra, Mimāmsā Nyāya-Prakāsa of Āpodeva. Upanishads—Isa, Kena, Katha, Prasna, Munda, Mandukya and Svetāsvatara with Sankara's Commentary.

(*b*) Simple unseen Sanskrit passages from any work of Philosophy for translation into English.

H.—Prakrit.

Paper V.—(*a*) Prasna Vyākarana, Vipākasuttra.

(*b*) Translation from English into Sanskrit (or Prakrit at the option of the candidates).

Paper VI.—(*a*) Prakrit portions of the following dramas:—

Sankuntalā, Vikramorvasi, Mālavikāgnimitra, Uttara-Charita, Mālati-mādhava, Mahāvira-charita, Mrichchhakatika, Mudrārākshasa, Ratnāvali, Karpuramanjari, Venisamhāra.

(*b*) Translation from Sanskrit into Prakrit.

Paper VII.—(*a*) Setubandha, Gaudavaho, Kumarapālacharita, together with a general knowledge of the Prākrita Paingala.

(*b*) Simple unseen passages in Prakrit for translation into English.

Paper VIII.—(*a*) Prakrit grammar as in Vararuchi's Prākrita-Prakāsa (Cowell), Chanda's Prākrita Lakshana (Hoernle), Hemachandra (Pischel).

Candidates are also expected to be familiar with the substances of Hoernle's Grammar of the Gaudian Language.

(*b*) Simple unseen passages in Prakrit for translation into Sanskrit.

I.—Epigraphy and History.

Paper V.—(*a*) Rājatarangini and its continuation with Stein's introduction and commentary.

(*b*) Unseen passages in Sanskrit for translation into English.

Paper VI.—Inscription of Asoka.

(*b*) Early Indian Alphabets.

Paper VIII. –

A. Selections from Epigraphia Indica: (A thorough knowledge of the Scripts of A and B will be expected.)

(1) Junagadh Rock inscription of Rudradaman of the year 72 (Volume VIII, No. 6.)
(2) Hirahadagalli grant of the Pallava King Sivaskandavarman (Volume I, No. 1).
(3) Banskhera Plate of Harsa (Volume IV, No. 29).
(4) Ganjam plates of the time of Sasankaraja (Volume VI, No. 14).
(5) Khalimpur plate of Dharmapaladeva (Volume IV, No. 34).
(6) Bolava copper plate of Bhojavarmadeva (Volume XII, No. 8).
(7) Rampal plate of Srichandradeva (Volume XII, No 18).
(8) The five Damodarpur copper plates of the Gupta period (Volume XV, No 7, see also Volume XVII, No. 13A).
(9) Karmadanda inscription of the reign of Kumargupta (Volume X, No. 15).
(10) Barrackpore grant of Vijayasena (Volume XV, No. 15).
(11) Ghasundi Stone Inscription (Volume XVI, No. 6).
(12) Haraha Inscription of Isanavarman (Volume XIV, No. 5).
(13) Aihole Inscription of Pulikesin II (Volume VI, No 1).
(14) Paithan plates of Gobinda III (Volume III, No. 17).
(15) Tirumalai Rock Inscription of Rajendrachola I, Volume IX, No. 31 (translation only).
(16) Nasik Prasasti of Gautami-putra Satakarni.
(17) Gadag Inscription of Bhillama (Volume III, No. 30)
(18) Gadag Inscription of Vira-Ballala II (Volume VI, No. 10)
(19) Saheth Maheth plate of Govinda Chandra (Volume XI, No. 3).
(20) Partabgarh Inscription of Mahendrapala II (Volume XIV, No. 13).
(21) Poona plates of Provavati (Volume XV, No 4)
(22) Gwalior Inscription of Bhojadeva (Volume XVIII, No. 13).
(23) Udaybakam grant of Krishnadeva Raya (Volume XIV, No. 12).

B. Fleet. Corpus Inscriptionum Indicarum (Volume III, Nos. 1, 5,6, 10, 11, 13-20, 32-37).

C. Prachina-Lekha-Mala

Sangali Plates of Gobinda IV (No. 6).
Bhalpur Plate of Narayanpal (No. 29).
Illichpur grant of Pravarsena II (No. 85).
Baidyanath Prasasti (No. 98).
Bilhari Inscription (No. 104).
Deopara Inscription of Vijayasena (No. 105).

Paper VIII. -(*a*) Ancient Geography of India.

The following books are recommended: –

Cambridge History of India, Volume I (Chapter on the Rig Vedic and later Samhita periods)
Cunningham. Ancient Geography of India.
Rājasekhara. Kāvya Mimāmsā (Desavibhaga Section).
Pargiter. Translation of the Mārkandeya Purāna (Bhuvanakosha only).
Dr. H. C. Roychoudhury. Studies in Indian Antiquities.

(*b*) Translation from English into Sanskrit.

Pali.

Compulsory.

Paper I.

1. Dīgha Nikāya :—

Brahmajāla Sutta.
Sāmaññaphala-Sutta.
Ambaṭṭha-Sutta.
Siṅgālovāda-Sutta.

2. Majjhima Nikāya, Vol. I, 10 Suttas only:

Mūlapariyāya-Sutta (No. 1).
Sabbāsava-Sutta (No. 2).
Bhayabherava-Sutta (No. 4).
Vatthūpama-Sutta (No. 7).
Sammādiṭṭhi-Sutta (No. 9).
Satipaṭṭhāna-Sutta (No. 10).
Ariyapariyesana-Sutta (No. 26).
Upāli-Sutta (No. 56).
Mahā-Rāhulovāda-Sutta (No. 62).

3. Saṃyutta Nikāya—Devatā and Kosala Saṃyuttas only.

4. Aṅguttara Nikāya—The following portions:—

Part III : §§ CXXXIII (pp. 149-51) and §§ CXCI-CXCII (pp. 221-230).

N. B.—Candidates are required to be acquainted with the following Suttas: Cakkavattisīhanāda-Sutta (D. N.), and Assalāyana-Sutta (M. N.).

Part II.

1. Mahāvagga of the Vinaya Piṭaka (Oldenberg's Edition), pages 1-156.
2. Cullavagga, Chapters XI and XII.
3. Bhikkhu-Pātimokkha—(Edited by Vidhushekhar Sastri).
4. Prātimokṣa Sūtra of the Sarvāstivāda sect (Edited by L. Finot, Journal Asiatique).

Paper III.

1. Vuttodaya (Ed. Sīlakkhanda, Nirnaya Sagar Press, Bombay).
2. Kaccāyana—(Edited by S. C. Vidyabhusana).
3. Vararuci—Prākrita Prakāśa (Edited by Basantakumar Chatterji).
4. Müller—Pali Grammar.
5. Woolner—Introduction to Prakrit.
6. Gune—Comparative Philology (Poona).

The following books are recommended for reference only:—

Barua and Mitra—Prakrit Dhammapada.
S. K. Chatterji—Origin and Development of the Bengali Language (Introduction only).

N. B.—The Course in Pali and Prakrit Philology includes the following topics: Classification of Languages, the Indo-European family of languages, the Aryan Branch—History of Sanskrit and Prakrit dialects—Development of Pali sounds and inflections—Pali with reference to Sanskrit and Indo-European.

Paper IV.

1. Rhys Davids—Buddhist India.
2. N. Dutt—Early History of the Spread of Buddhism and the Buddhist Schools.
3. N. Dutt—Some Aspects of Mahayana in relation to Hinayana (Chapters, I, II, IV and V).
4. Winternitz—Geschichte der indischen Literatur, Vol. II, Buddhist Literature only (English Trans.).
5. Inscriptions of Asoka (in translation only).
6. E. J. Thomas—Life of the Buddha.
7. Eliot—Hinduism and Buddhism, Volumes II and III.
8. Law - A History of Pali Literature, Volume I.

The following books are recommended for reference only : —

Malalasekera—Pali Literature of Ceylon.
Mabel Bode—Pali Literature in Burma.
Hoernle—Manuscript Remains of Buddhist Literature found in Eastern Turkestan, Vol. I.

Optional Groups.

[In addition to the Compulsory Papers, candidates will have to offer *one* of the following Groups.]

Group A.—Literature.

Paper V.

1. Select Jātakas and Legends of the Buddha forming the Literary basis of the Barhut and Sāñci sculptures.
2. Rhys Davids—Buddhist Birth-stories (Introduction only).
3. Fick Social Organisation in N. E. India in Buddha's time.

The following books are recommended for reference only :-
Petavathu and Vimānavatthu.

Paper VI.

1 Theragāthā, pp. 87-115.
2 Therīgāthā, pp. 143-174 (with Commentary).
3. Sutta-Nipāta (Bapat's edition) Aṭṭhaka and Pārāyaṇa Vaggas only.
4 Visuddhimagga, chapters I (pp. 1-16), III. XIV, XVII and XVIII.
5. Milindapañha (Trenckner's edition), pp. 242-271, 284-301, 313-362.

Paper VII.

1. Inscriptions of Asoka (in the original) with special reference to Pali language and literature.
2. Barhut Inscriptions (Barua and Sinha).
3. Barhut stone as a Story-Teller (section bearing on the inscriptions), (Barua), Book I.
4. Sāñchi Stūpa Inscriptions (Epigraphia Indica, Vol. II).

Recommended for study :

1. Brāhmī Inscriptions in the Udayagiri and Khandagiri Caves (Barua's edition).
2. Brāhmī Inscriptions on the Bodh-Gaya Stone-railing in Barua's Gayā and Buddha-Gayā Vol. II, Book III.
3. Nasik Praśasti of Gautamī-putra Sātakarṇi.

Paper VIII.

A. Essays.
B. Unseens. (Translation).

Group B.—Philosophy.

Paper V.

1. Dhammasaṅgaṇi.
2. Atthasālini (P.T.S.), pages 1-136.
3. Vibhaṅga (P.T.S.), Sacca, Satipaṭṭhāna, and Paccayākāra.

Paper VI.

1. Netti-Pakaraṇa.
2. Abhidhammattha-Saṅgaha.
3. Abhidhammāvatāra.

Paper VII.

1. Kathāvatthu (P.T.S.), Vol. I, pages 1-103, with commentary.
2. Paṭṭhāna (Uddesa and Niddesa).

Paper VIII.

A. Essays.
B. Unseens. (Translation).

Group C.—Epigraphy and History.

Paper V.

1. Mahāvaṃsa (Geiger's edition), chapters I-XX.
2. Sāsanavaṃsa (P. T. S. edition)—Suvaṇṇabhūmi and Aparānta.
3. Mabel Bode—Pali Literature in Burma.

Paper VI.

1. Inscriptions of Asoka (in the original), with special reference to Pali.
2. Inscriptions of Dasaratha.
3. Piprahwa Vase Inscription.
4. Sohgaura Copper Plate.

Paper VII.

1. Old Brāhmī Inscriptions in the Udayagiri and Khandagiri Caves (Barua's edition).

2 Cave Inscriptions of the Scythian and Sātavāhana Dynasties :—

(*i*) Nanaghat Inscriptions.
(*ii*) Nasik Inscriptions of Gautamīputra Sātakarṇi and Pulumāyi.
(*iii*) Kanheri Inscription of Vasishṭhīputra Sātakarṇi.
(*iv*) Karle Inscriptions of Pulumāyi.
(*v*) Nasik and Karle Inscriptions of Ushavadāta.
(*vi*) Junar Inscriptions of Ayama.

3. Inscriptions of the Gupta Period—

(*i*) Allahabad Pillar Inscription of Samudra-Gupta.
(*ii*) Sanchi and Udayagiri Inscriptions of Chandra-Gupta, II
(*iii*) The Mathura Inscription of the year 61.
(*iv*) Bilsad, Mankuwar and Dhanaidaha Inscriptions of Kumāra-Gupta, I.
(*v*) Bhitari, Junagadh, Kahaum and Indor Inscriptions of Skanda-Gupta.
(*vi*) The Damodarpur Plates.
(*vii*) The Paharpur Plate of the year 159.
(*viii*) The Gunaighar grant of the year 188.
(*ix*) The Mandasor Inscriptions of Kumāra-Gupta and Bandhuvarman, and of Yaśodharman.
(*x*) Bodh-Gaya Inscriptions of Mahānāma.

For reference :—

H. C. Raychaudhuri—Political History of Ancient India.

Paper VIII.

1. Cunningham—Ancient Geography of India, revised by S. N. Majumdar.
2. Watters—Yuan Chwang, 2 volumes.

The following books are recommended for reference only :—

(1) Pargiter—Translation of the Mārkaṇḍeya Purāṇa, Bhuvanakosha only.
(2) Marshall—A Guide to Taxila.
(3) Marshall—A Guide to Sanchi.
(4) Sahni—A Guide to Sarnath.
(5) Foucher—Notes on the Ancient Geography of Gandhāra.
(6) Legge—The Travels of Fa-Hien.
(7) Reports of the Archæological Survey of India about Taxila, Isipatana, Vesāli, Sāvatthi, Rājagaha, Kusinārā, Kapilavatthu and Nālandā.
(8) Raychaudhuri—Studies in Indian Antiquities (Geographical section).
(9) Law—Geography of Early Buddhism.

Group D. Mahāyāna Literature and Philosophy.

Paper V.

1. Lalita-vistara (first eight chapters)
2. Aśvaghosha Buddhacarita (Chapters 1-13)
3. Śāntideva Bodhicaryāvatāra (last chapter only)

Paper VI.

1. Mādhyamika-kārikā with Vrtti of Candrakirti (Chaps. I, XXIII-XXVI).
2. Laṅkāvatara Sūtra (Bunyiu Nanjio's Edition, first five Chaps only).
3. Vijñaptimātratāsiddhi (Triṃśikā only), with Commentary

Paper VII.

1. Nyāyabindu with the Ṭīkā of Dharmottara.
2. Sarvadarśana-saṅgraha (portion dealing with Buddhist Philosophy).

The following books are recommended for reference only :-

Vidyabhusana—History of Indian Logic (Buddhist Logic only).
Bhattacharyya—English Introduction to the Tattvasaṅgraha.

Paper VIII

A. (*i*) Kielhorn- Sanskrit Grammar.
(*ii*) Macdonnell Sanskrit Grammar
B. Essay.

Arabic.

I The M.A Course in Arabic shall be divided into six groups
II. The first four papers of all the groups shall be identical and shall cover the following subjects :

Compulsory Papers.

Paper I. History of Islam in Arabia and Persia and in Mediterranean countries 100

Books recommended

1 Tarikhu Abi'l Fida Volumes I II.
2. Caliphate Its Rise, Decline and Fall (by Sir William Muir).
3 A Short History of the Saracens (Amir Ali).
4 Muruju'l-Dhahab (al-Masudi)
5. Hula-al Ayyám fi Khulafa-al-Islam by Ata Basha Husaini.

Paper II. (*i*) History of the Arabic Language 30

The course in the History of the Arabic Language includes the following topics :

The General Characteristics of the Semitic Family of Speech- Their Classification The Grouping of the Semitic Languages Elements of the History of the Sounds and inflexions of Arabic in the Pre Islamic and Classical Periods.

(*ii*) History of Arabic Literature 70

Books recommended

1. Tarikhu-Adabi'l-Lughati'l-Arabiyya (J Zaydan)
2 A Literary History of the Arabs (Nicholson)
3. A History of Arabic Literature (C Huart).
4. Falsafatu'l-Lughati'l-Arabiyya (J Zaydan).
5. Article on Semitic Languages in the Ency Britt (11th Ed.) (by Th Nöldeke).
6. Semitischen Sprachen (Th. Nöldeke).

Paper III—(*i*) Arabic Grammar 30
(*ii*) Rhetoric and Prosody 30
(*iii*) Translation of unseen passages from Arabic into English and *vice versa* 40

Books recommended—

1. Arabic Grammar by Palmer.
2. al-Mufassal by al-Zamakhshari.
3. Talkhis-al-Miftah by al-Qazwini.
4. Muhitu'l-Daira.

Paper IV—(*i*) Modern Arabic—

(*a*) Prose and
(*b*) Poetry } 50

(*ii*) Essay on a subject connected with the compulsory papers .. 50

Books prescribed—

1. 17 Ramadán (J Zaydan).
2. Al-Shu'aráu'l-Thalátha.

The following poems only :—

1. Ayatu-l'Aṣr.
2. Aya Sufiya.
3. al-Maratu'l-Uthmaniya.
4. Munajatu'l Ahram.
5. Ya Layla-s-Sabb.
6. Taifu'l Habib.
7. 'Ibratu'd-Dahr.
8. Abu'l Hawl.
9. Wasfu'l Astána.
10. Tolstoi and al-Ma'arri.
11. *al*-Riqqu-wal-Hurriya.
12. Abdullah b. Zubayr.

III. The remaining papers shall be taken from one of the following groups to be selected by the candidates :—

Group A.

Literature.

Paper V.—Text—Pre-Islamic Poetry 100

Books prescribed—

1. The Diwan of Imruu'l-Qays.
2. The Lamiyatu'l-Arab (by al-Shanfara).

Paper VI.—Text—Post-Islamic Poetry 100

Books prescribed—

Diwan-Siqtu'l-Zand. (Egypt, Edition 1901) pages 1-75.
2. The Lamiyatu'l-Ajam (al-Tughrai).

Paper VII.—Text—Literary Criticism 100

Books prescribed—

1. Kitabu'l Shi'ri Wal-Shu'ara by Ibn Qutayba—The part dealing with the Shir
2. Naqdu'l-Shi'r (by Qudama b. Ja'far).
3. Al-Bayan-u-wal Tabyin (1st 100 pages of Vol. I).

Paper VIII.—Text—Prose 100

(*i*) Rhymed.
(*ii*) Unrhymed.

Books prescribed—

1 The Maqamat of al-Hariri. Introduction and Maqama, 1-3 ; 49-50.
2. The Rannatu'l Mathalithi-wal-Mathani (First half of Vol. I).

Group B.

History.

Paper V.—Philosophy of History 100

Text prescribed

The Prolegomena of Ibn Khaldun, excluding the geographical portion.

Paper VI.—

Early Caliphate- Umayyads and Abbasids 100

Text prescribed--

1. al-Akhbáru 'l Tiwal (From the birth of the Prophet Muhammad up to the end pp. 75-402 European Edition).
2. Kitabu'l Fakhri.

Paper VII.—

Muslims in Spain 100

Text prescribed-

Nafhu'l-Tib--Volume I Chapters 2, 3 and 4.

Paper VIII.

A special period in the History of Islam to be prescribed every year by the Board.

For the Examination of 1937 and 1938 the following periods have been fixed :

The Fatimide period of the History of Egypt to the end of 1036 A D.

Books recommended (for the Examinations 1936-37 ; 1937-38):

1. Al-kámil by Ibnu'l Athir (Chapters relating to the above period).
2. The History by Ibn Khaldún (Chapters relating to the above period).
3. Geschichte der Fatimiden by Wüstenfeld.

Group C.

The Quran and the Tafsir.

Paper V. Text from the Quran 100

(*i*) Sura Maida.
(*ii*) Sura Yusuf.
(*iii*) Sura Najm.

Paper VI. Text- Tafsir.

The Tafsir by al-Baydawi Sura Al i-'Imrán.

Paper VII. Quranic Sciences 100

Books recommended-

(*i*) al-Itqán by al-Suyúti.
(*ii*) al-Fauzu'l-Kabír.

Paper VIII.—History of the Interpretation of the Quran .. 100

Books recommended

1. al-Fihrist (by Ibnu'l Nadím)
   Discourse 1, Section 3 (on the Quran)
2. Geschichte des Qurans (by Noldeke).
3. Translation of the Qur'án (by Muhammad Ali) Preface only.
4. Canon Sell's Recensions of the Qur'án Introduction only.
5. Die Richtungen der Islamischen Koranauslegung, by Goldziher.

Group D.

Hadith.

Paper V.—Text 100

Books prescribed—

(*i*) The Sahih of al-Bukhárí—Chapters on Fadáil of the Qur'án, on Ṣulḥ on Adab on I'tiṣám.

Paper VI.—Text 100

Books prescribed—

(*i*) Jámi'of al-Tirmidhí—Chapters on Birr and Sila, on 'Ilm and on Siyar.
(*ii*) Muaṭṭa of Imám Málik, up to the beginning of Kitabul-nikáh.

Paper VII—'Uṣúli-i-Ḥadíth including the Mauḍu'át .. 100

Books recommended—

(*i*) Nukhbatu'l-Fikar.
(*ii*) Muqddamatu Ibn Saláh.
(*iii*) Alfiya by al'-Iráqí.
(*iv*) Mauḍú'át by Mulla 'Alí Qárí.

Paper VIII.—The History of the Development of the Science of Hadith 100

Books recommended—

(1) Tarikhu Adabi-'l-Lughati'l Arabiya (Parts dealing with Hadith).
(2) Muhammadanische Studien, Volume II, Kapitel, I-VIII.
(3) The Traditions of Islam.
(4) Muqaddama of Ibn Khaldun (Chapters on the Science of Hadith).
(5) Ibn Khallikan—Articles on prominent Muhaddithun.
(6) al-Ikmal.

Group E.

'Ilmul Kalám and Philosophy.

For the Examinations of 1937 and of 1938—

Paper V.—al-Falsaftu-Ishraqiya 100

Text prescribed—

(1) Hayákilu'l-Núr.

Paper VI.—al-Falsaftul-Mashsháiya 100

Texts prescribed—

(1) al-Naját by Ibn Siná.

Paper VII 100

Texts prescribed—

(1) Sharhu'l-'Aqai'd by al-Taftázání.

Paper VIII.—History of Muslim Philosophy and 'Ilmu'l Kalam 100

Books recommended—

(1) History of Philosophy in Islam (by Dr. T. J. de Boer).
(2) Histoire de la Philosophie Medievale (by Maurice de Wulf).
(3) Entwicklung der Arabischen und Jüdischen Philosophie im Mittelalter (by Pollak), pages 196-286, 433-459.
(4) al-Kalam by Shibli.
(5) 'Ilmu'l Kalam by Shibli.

Group F.

Philology and Grammar.

Only such students will be allowed to take up this Group as have passed B.A. Examination with Honours in Arabic or any other examination equivalent to it or M. A. Examination in any other Group in Arabic.

Paper V.—(*i*) Arabic Grammar 50
(*ii*) Linguistic theories of the Arab Grammarians 50

Books recommended -

1. Arabic Grammar by W. Wright (Cambridge University Press).
2. The Commentary on Alfiyya (by Ibnu'l-Aqil).
3. al-Kitab by Sibwayhi.
4. Kitabu'l-Insaf by Ibnu'l-Anbari.

Paper VI.— (*i*) General Principles of Linguistic Development including Phonetics .. .. } 100
(*ii*) Elements of Arabic Palæography .. .. .. }

Books recommended-

1. Leonard Bloomfield. An Introduction to the Study of Language (New York, Henry Holt & Co.).
2. Henry Sweet. A Primer of Language (Dent).
3. W. H. T. Gairdner. The Phonetic of Arabic (Oxford University Press).
4. Isaac Taylor. The Alphabet.

Paper VII.— (*a*) Hebrew 50

Books prescribed—

1. Davidson's Hebrew Grammar.
2. Bible. Genesis, Chapters I-III, Book of Ruth—

(*b*) Syriac 50

Books prescribed -

1. Robinson. Syriac Grammar.
2. Bible. Matthew's Gospel, Chapters V-XV.

Paper VIII.— Comparative Philology of the Semitic Language .. 100

Books recommended -

1. Vergleichende Grammatik der Semitischen Sprachen, Vols. I-II (Carl Brockelmann).
2. Comparative Grammar of Semitic Language (Wright).
3. Semitic Language (O'Leary).
4. French Translation of Brockelmann Smaller Comparative Grammar of the Semitic Languages (Sammlung Goschen series) by Marcais and Cohen (Paris, Paul Geuthner).

Persian.

I. The M. A. Course in Persian shall be divided into five groups.
II. The first four papers of all the groups shall be identical and shall cover the following subjects :—

Compulsory Papers.

Paper I. (*i*) General History of Pre-Islamic and Post-Islamic Persia 70
(*ii*) General History of Islamic India 30

Books recommended -

1. Irani Bastani, by Husan Perniya. Volumes I-II.
2. History of Persia, by Sykes, Volumes I-II.
3. History of India, by Smith.
4. Siyarul-Mutaakkhirin (omitting the Hindu Period).

Paper II.—(*i*) History of Persian Literature 100

Books recommended—

1 Literary History of Persia, by E. G. Browne, Volumes I-IV.
2 Shiru'l-Ajam, by Shibli, Volumes I-IV ..

Paper III.—(*a*) Philology 30

The Course in Persian Philology includes the following topics :—

General Principles of Philology—The Indo-European Family of Languages —Their Classification—the Aryan or Indo-Iranian Branch—The History of the Study of Avestan, Old Persian, and Pahlavi—Classification and Geographical distribution of Iranian dialects—History of Iranian in its sounds and inflexions in the Old Iranian, Middle Iranian and New Iranian Periods.

(*ii*) Rhetoric and Prosody 30

(*iii*) Translation of Unseen Passages from Persian into English and *vice versa* 40

Books recommended—

1. Persian Grammar, by Platts and Ranking (Parts dealing with Philology).
2. Sakhundani Pars.
3. Geldner's Article on the Persian Language in the Encyclopædia Britannica (11th Edition).
4. Hadaiqu'l-Balaghat.
5 Hadaiqu'l-Sihr
6. Aruzi Sayfi. English Translation by Blochmann.
7. Dasturi—Parsi-Amuz, by Ubaydi.
8. Short Manual of Comparative Philology by Giles.

Paper IV.—(*i*) Modern Persian—

(*a*) Poetry } 50
(*b*) Prose }

(*ii*) Essay on a subject connected with the compulsory papers .. 50

Books prescribed—

1. Bist Maqala-i-Qazwini, Volume I, pages 24-36, 48-54, 66-105.
2. Wukalai Murafaa.
3. Sukhanvaran-i-Iran Dar 'Asr-i-Hazir. By M. Ishaque. The Poems of Parvin, Ishqi and Bahar.

III. The remaining papers shall be taken from one of the following groups :—

Group A.

Literature.

Paper V.—Text—Poetry—

(*i*) Ghazal 70
(*ii*) Rubai 30

Books prescribed—

1. Ghazals of Hafiz, up to the end of Radif-i-Dal.
2. Ghazals of Naziri, Radif-i-Dal only.
3. Rubaiyat of Umar Khayyam (Dr. Rosen's Edition).

Paper VI.—Text—Poetry—

(*i*) Qasida 50
(*ii*) Mathnawi 50

Books prescribed—

(*i*) Qasa'id of Zahir-i-Faryabi (Nawalkishore Edition), pages 1-50.
(*ii*) Qasa'id of Urfi (Cawnpore Edition), pages 1-50.
(*iii*) Dawalrani Khidir Khān by Khusraw.

Paper VII.—Text—Prose (Ornate) 100

Books prescribed—

1. Waq'a'i' of Ni'mat Khan 'Ali (Cawnpore Edition), pages 1-44.
2. Si Nathr of Zahuri Nathr, 1 and 2.

Paper VIII.—Text—Prose (simple) 100

Books prescribed—

1. Tadhkiratul-Ahwal by Ali Hazin
2. Qabus Nama—Authors introduction and Chapters 1-10 (omitting Hikayati digar bayad amad mara in Chapter 7) and Chapters 36-44.

Group B.

Historical Literature (Persian).

Paper V—Text—Historical Poetry 100

Books prescribed-

Shahnama Macan's Edition, pp. 1065-1286.

Paper VI—Text—Prose -Tahiride and Ghaznavide Periods .. 100

Books prescribed

Zaynul's Akhbar—by Gurdizi.

Paper VII Text Prose Saljuq and Tatar Periods. .. 100

Books prescribed

1. Tarikhi Saljiquin. Houtsma's Edition.
2. Jamiu't Tawarikh (Tatar period).

Paper VIII—Text—Prose—Safawide and Qachar Periods. .. 100

Books prescribed –

1. Nasiku'l-Tawarikh, Vol. Qachar.
2. Alam Arai Abbasi.

Group C.

Historical Literature (Indian).

Paper V—Text- -Historical Poetry. 100

Books prescribed -

Qiranu'l-Sadayn.

Paper VI—Text- -Prose—Pre-Mughal Period 100

Books prescribed—

Tarikhi-Mubarak Shahi.

Paper VII—Text—Prose—Moghul Period (Baber-Akber). .. 100

Books prescribed—

Muntakhabul-Tawarikh Baber-Akber (excluding the biographical part)

Paper VIII—Text—Prose—Moghal Period (Jahangir and Shah Jahan) 100

Books prescribed -

Muntakhabu'l-Lubab.

Group D.

Philosophy and Mysticism.

Paper V—Text—Mystical Poetry 100

Books prescribed—

1. Hadiqai-Sanai—Hadiqa I.
2. Mathnawi by al-Rumi, Dafter I (up to the beginning of Tafsir-i-masha allahu Kana).

Paper VI—Text—Prose 100

Books prescribed—

1. The Lawaih by Jami.
2. Kashfu'l Mahjub—up to the beginning of the Chapter Dhir-u-Aimmatihim min, Atbail-Tābi'ina.

Paper VII—Philosophy of Mysticism 100

Books recommended—

1. Studies in Islamic Mysticism by R. A. Nicholson.
2. Development of Metaphysics in Persia, by Sir Muhammad Iqbal.
3. Futuhu'l Ghayb.
4. The Awarif-al-Maarif (translated into English by H. W. Clarke).

Paper VIII—History of Mysticism 100

Books recommended—

1. Tadhkiratul Awliya.
2. Nafahatul Uns.
3. Mystics of Islam.

Group E.

Philology.

Paper V—

(*a*) General Principles of Linguistics
(*b*) History of the Persian Script } 100

Books prescribed—

1. L. Bloomfield—An Introduction to the Study of Language (New York, Henry Holt & Co.).
2. H. Sweet—A Primer of Language (J. M. Dent).
3. I. Taylor—The Alphabet.

Paper VI—Texts (including elements of Grammar)—

(*a*) Avesta
(*b*) Old Persian } 100

Books prescribed—

1. Herbert Cushing Tolman—Ancient Persian Lexicon and the Texts of the Achaemenidan Inscriptions, transliterated and translated (Vanderbilt Oriental Series, Vanderbilt University, Nashville, Tennessee, U. S. A., Behistan, Vols. 1 and 2.).
2. Edwin Lee Johnson—Historical Grammar of the Ancient Persian Language (Vanderbilt Oriental Series, Vol. VIII).
3. A. Meillet Grammaire de Vieux Perse (Paris E. Guilmoto, 1915).
4. Avestan -1. J. S. Taraporewala—Selection from Avesta and Old Persian. First Series, Part I (Calcutta University, 1922), Haoma Yast, Sraosa Yast, the Zoroastrian Creed—The three prayers).
5. A. V. W. Jackson—An Avesta Grammar (Stuttgart, 1892, reprinted, 1912).

Paper VII—

(*a*) Pahlavi Text (including elements of Grammar)
(*b*) Semitic Influence on Persian Language } .. 100

Books proscribed—

1. Pahlavi—J. M. Unvala—The History of King and his Boy (Paris, Paul Geuthner).
2. E. Blochet—Etudes de Grammaria Pehlevie (Paris. E. Guilmoto).
3. C. Salemann—Mittelpersisch, in the Grundriss der Iranischen Philologie.

Paper VIII.—(*a*) Historical Grammar of the Iranian Languages 50
(*b*) Sanskrit 50

Books prescribed -

Selections from the Matriculation Course (Calcutta University) ..

Books recommended -

1. Grundriss der Iranischen Philologie: —

Dr. Bartholomae's Old Persian and Avestan Grammar, Salemann's Middle Persian and Dr. Paul Horn's Modern Persian Literary Speech.

2. H. Reichelt- Awestisches Elementarbuch (Heidelberg).
3. L H. Gray—Indo-Iranian Phonology (Columbia University Press).

Only such students will be permitted to take up this Group as have passed B.A. Examination with Honours in Persian or M.A. Examination in any other Group in Persian.

Indian Vernaculars.

Bengali.

(Principal Subject.)

Paper I.

History of Bengali Literature from the earliest times down to 1850.
Special period—Vaiṣṇava Literature during the Sixteenth Century.

Books recommended—

D. C. Sen. History of Bengali Language and Literature (Calcutta University).
D. C. Sen. Vaiṣṇava Literature of Mediaeval Bengal (Calcutta University).
D. C. Sen. Folk-Literature of Bengal (Calcutta University).
D C. Sen. The Bengali Rāmāyaṇas (Calcutta University).
S. K. De. History of Bengali Literature, 1800-1825 (Calcutta University).
Śaśankamohan Sen. Vangavāṇī. (Calcutta University).
Ramgati Nyāyaratna. Bāṅgālā Bhāṣā O Sāhitya Viṣayaka Prastāva.

Books of reference—

M. Adhikari. Vaiṣṇava Digdarśani.
D. C. Sen. Caitanya and His Age.
M. M. Bose. Post-Caitanya Sahajiyā Cult.

Paper II.

Caryā-carya-Viniścaya; Caryās of Kaṇha. (Bangiya Sāhitya Pariṣad).
Gopicandrer Pāñcāli (Calcutta University).
Śrī-Kṛṣṇa Kirttana. Janma-Khaṇḍa and selected portions of Vaṃśī and Viraha Khaṇḍas (Bhangiya Sāhitya Pariṣad).
Śūnya Purāṇa. Cārucandra Banerji.
Caitanya Caritāmṛta. Selected portions. Madhya Līlā. (Chapters 1-7, omitting Chapter II).
K. N. Mitra and N. Vrajavāsi. Padāmṛta Mādhurī, Part I.

Paper III.

Mukundarāma Kavikankana Candīmangala. The Kālaketu Story only.
D. C. Sen. The following selected Ballads from the Mymensingh Gītikā (Pūrba-Banga-Gītikā; Calcutta University):—

Volume I.—Mahuā, Maluā, Candrāvatī.

Michael Madhusudan Datta Birāngañā.
Girischandra Ghosh Janā.
Rabindranath Tagore. Selections from Sañcayitā and Sāhitya, Rājā, Dākghar.
Nabinchandra Sen Pravás.
Bankimchandra Chatterji. Krishnakānter Will.
Hemchandra Banerjee. Chāyāmayī.

Recommended for reference only—

Lalmohan Vidyānidhi. Kāvya-nirnaya.
Syamaprasad Mookerjee. History of the Bengali Stage ("Calcutta Review," January, 1924)
T. C. Dasgupta Aspects of Bengali Society from Old Bengali Literature.
Biswapati Chaudhuri. Kāvye Rabindranāth.
Brajendranath Banerjee. Bāngālā Nāṭaker Itihāsa.
Ajit Chakravarti. Kāvya-Parikramā.

Paper IV.

(*a*) Development of Prose Style in Bengali Literature, 1800-1857.

D. C. Sen. Bengali Prose Style.
Sukumar Sen. Bāngālā Sāhitye Gadya.

(*b*) Influence of Western Culture on Bengali Literature, 1870-1900, with special reference to the works of Bankimchandra and Rabindranath.

Priyaranjan Sen. Western Influence in Bengali Novel (Calcutta University) and Western Influence in Bengali Literature (Calcutta University).

In Papers II and III, 75 marks shall be allotted to the texts and 25 marks to the unseen passages.

Questions on the text shall include—

(*a*) Questions on the subject-matter and on the language of the prescribed books (historical, geographical, critical questions and literary allusions are not excluded).
(*b*) Questions on grammar and prosody arising from the text.
(*c*) Questions on the life and literary career of the authors whose works are prescribed.

Papers V and VI.

(*See* under " Subsidiary Languages.")

Paper VII.

(*See* under " Basic Languages.")

Paper VIII.

B. C. Majumdar. History of the Bengali Language, Lectures 1, 5, 6, 7, 8, 9 and 14 only. (Calcutta University).
S. K. Chatterji. Origin and Development of the Bengali Language (Calcutta University), and Bāngālā Bhāsātattaver Bhumikā

Hindi.

(Principal Subject.)

Paper I—History of Literature.

History of Hindi Literature from Chand Bardai (12th Century) down to Babu Hairischandra.

Special subject. Religious Literature of Hindi Vaishnava Poets in the 15th and 16th Centuries.

Books recommended

Rai Bahadur Gauri Sankar Hirachand Ojha Madhyakalin Bharatiya Sanskriti
Shyamsundar Das Hindi Bhasha aur Sahitya.
Sir George Abraham Grierson Vernacular Literature of Hindusthan.
Misra Brothers. Hindi Navaratna.
Ramchandra Shukla. Hindi Sahitya Ka Itihas.
Farquhar. Religious Literature in India.

Books of reference

Misra Brothers. Misrabandhu Binoda.
Siv Sinha Sengar. Siva Singa Saroja.

Paper II—Old Texts.

Prithiraj Rasau Chand Bardai. (Select potrions from Vol. I of Typical Selections by Lala Sitaram. Calcutta University).
Pandit Ramchandra Shukla Bhramar Gita sar.
Tulsidas. Kavitavali; Vinaya Patrika.
Jayasi. Padumavat, Part I (First half).
Sant Bani Sangraha, Volume II (Belvedere Press).
Dhirendra Varma. Ashtachhap
Kabir Granthavali. First 152 Padas and Ramani portion Edited by Babu Shyamsundar Das, Nagari Pracharini Sabha Benare

Recommended for reference—

Kahnaya Lal Poddar. Kavyakalpataru.

Paper III Mediaeval and Modern Texts.

Bhushan Sivaraj Bhushan
Bihari Lal. Satsai (Hindi Sahitya Sammelan).
Harischandra. Chandravali.
Prof Ramakant Tripathi. Hindi Gadya Mimansa.
Maithili Saran Gupta. Saket.
Jagannath Das Ratnakar. Uddhava Satak
Jay Shankar Prasad. Skanda Gupta
Premchand. Kaya-kalp.

Paper IV. Essay Paper.

(*a*) Development of Hindi Literature, 1850-1900.
(*b*) Foreign Influence on Hindi Literature.

Papers V and VI.

(Subsidiary Languages.)

Paper VII.

(Basic Languages.)

Paper VIII.

Grierson Linguistic Survey of India, Vol IX (Western Hindi).
Lyall. Article on Hindusthani (in the Encyclopaedia Britannica, 9th edition).
Kellog Grammar of the Hindi Language
Greaves. Grammar of Tulsidas
N. M Sanyal. Bhāshā Vijnān.
Dhirendra Varma. Hindi Bhasha ka Itihas.
Mangaldev Shastri. Tulanatmak Bhasha-bigyan.

Maithili.

(Principal Subject.)

Paper I.

History of Maithali Literature from the earlier times (the thirteenth century down to Chanda Jha).

Special Subject. Age of Vidyapati.

Paper II.

Jyotirishvat Thakur. Varnanaratnakar.

Vidyapati. Padavali, edited by Nagendranath Gupta. Radhakrishna Padas, 1-106 and Hara-Gauri Padas.

Paper III.

Harsanath. Ushaharan.
Harasnath. Madhavananda.
Jivan Jha. Sundar Samyog.
Lal Das. Ganes Khand.
Jiban Jha. Samabati Punarjanma (Natak).
Govind Das. Padyasangraha.
Ramdas Jha. Anand Vijay.
Umapati. Pārijātharana

Paper IV.

Influence of Persian on Maithili.

Development of Maithili Literature, 1850-1900.

Books recommended—

Rashbiharilal Das. Maithila-Darpana.
Shyamnarayan Singh. History of Trihut.

Papers V and VI.

(Subsidiary Languages.)

Paper VII.

(Basic Languages.)

Paper VIII.

Linguistic Survey of India, Volume V, Part II.

Grierson's Maithili Grammar, Second Edition, and Maithili Chrestomathy, Hoernye's Comparative Grammar of the Gaudian Languages.

Article by Sir George Grierson on the Radical and Participal Tenses in the Modern Indo-Aryan Vernaculars (Journal of the Asiatic Society of Bengal, 1895).

S. K. Chatterji. The Varna Ratnakar of Jyotiriswar Thakur (Proc. of the Fourth Oriental Conference, Volume II).

Urdu.

(Principal Subject.)

Paper I.

History of Urdu Literature from the earliest times up to Anis.

Special Period. The Delhi School of Poetry up to Mir or the Lucknow School of Atash and Nasikh.

Books recommended—

Saxena. History of Urdu Literature.
Muhammad Husain Azad. Ab-i-Hayat.
Shamsullah Qadri Urdu-i-Qadim.
Hashmi. Dakan men Urdu.
Abdus Salam. Shir-ul-Hind. Volumes I, II.
Shirani, Mahmud Khan. Panjab men Urdu.

Books for reference

Sri Ram. Khum Khana-i-Jawid.
Lyall. Hindustani Language. (Encyclopaedia Britannica, 9th edition).
Abdul Hai, Gul i Rana.
Garcin de Tassy. Histoire de la literature Hindouie et Hindustanie (3 Volumes)..
Blumhardt, J. F. A Catalogue of Hindustani MSS. in the India Office Library.
Muhammad Umar and Nur Ilahi. Natak Sagar (i.e. History of Urdu Drama).

Paper II—Old Texts.

(*a*) *Poetry*—

Diwan-i-Wali. (Anjuman-i-Taraqqi-e-Urdu edition, by Ahsan Marahrawi).
Meer Hasan Mathnawi.
Intikhab-i Kalam-i-Mir. (Anjuman-i-Taraqqi-e Urdu edition, by Abdul Haqq).

(*b*) *Prose*

Risala-i-Ghesu Daraz (Edited by Shamsullah Qadiri, Hyderabad, Deccan)
Rajab Ali Beg Surur. Fasana-i-Ajaib.
Mir Sher Ali Afsos. Araish Mahfil

Paper III—Mediæval and Modern Texts.

(*a*) *Prose and Drama*—

Muqaddama-i-Shir' o-Sha'iri by Hali.
Mirza Md. Hadi. Laila wa Majnun.
Sir Syed. Akhri Mazamin.
Sharar. Ayyam-i-Arab.

(*b*) *Poetry*

Diwan-i-Ghalib (Nizami edition).
Musaddas-i-Hali.
Marsias of Anis (First half of Volume I).

Paper IV.

(*a*) Development of Prose style in Urdu Literature, 1800-1900.
Candidates are recommended to refer to Md. Yahya's *Nasr-ul-Musannafin* (Volumes I and II) and Ghulam Mahiuddin Qadiri's *Urdu Ke Asal i Bayan*.
(*b*) Influence of Western Culture on Urdu Literature, 1860-1900, with special reference to the works of Sir Saiyad Ahmad Khan, Abdul Halim Sharar and Hali (candidates are recommended to read Dr. A. Latif's *Influence of English Literature on Urdu*).

Questions on the text shall include -

(*a*) Questions on the subject matter and on the language of the prescribed books (historical, geographical, critical questions and Literary allusions are not excluded)
(*b*) Questions on grammar and prosody arising from text.
(*c*) Questions on the life and literary career of the authors whose works are prescribed.

Papers V and VI.

(Subsidiary Language.)

Paper VII.

(Basic Languages.)

Paper VIII.

For reference—

Platts. Hindustani Grammar.
Grierson. Linguistic Survey of India, Volume IX (Western Hindi).
Lyall. Article on Hindustani (Encyclopaedia Britannica, 9th edition).
Kellog. Hindi Grammar (Philological portions only).
Mohiuddin Qadiri's Urdu Phonetics (Paris, 1930).

Oriya.

(Principal Subject.)

Paper I.

General History of Oriya Literature from the earliest times to 1803 A.D. Special Period. From 1430 to 1568.

The following books and articles are recommended :—

(1) Syamasundara Rajaguru's Pravandhavali.
(2) M. M. Chakravarti's Essay in J. A. S. B. for 1898, No. 4.
(3) Introductory Essays to Volume I and Volume II of Typical Selections from Oriya Literature by B. C. Majumdar, published by the Calcutta University.
(4) Binayak Misra. Oriya Sahitya.

Paper II.

The following portions from the Oriya Sahitya Paricaya. Volume I (published by the Calcutta University), pages 1-276, 366-440.
Artaballava Mahanti. Prachin Gadyapadyādarsa.

Paper III.

A. Mediaeval—

(1) Upendra Bhanja's Lāvanyabati, as in the "Typical Selections from Oriyā Literature," Vol. II, pages 79-108.
(2) Abhimanyu Sāmanta's Vidagdha Cintāmani, as in the "Typical Selections from Oriyā Literature," Vol. II, pages 209-331.
(3) Kishori Chandrānanā Champu, by Baladev Kavisurya.
(4) Brajanath Barojina. Samaratanaranga.

B. Modern—

(1) Rādhānātha Ray's Mahāyātrā.
(2) Madhusudan Rao's Vasanta Gāthā.
(3) Senāpati, Chhamān Āṭgunṭh.
(4) Ramsankar Ray. Kancikāveri.

Paper IV.

(1) Influence of Upendra Bhanja on the post-Upendra Bhanjio Literature of Orissa.
(2) Growth of Modern Oriya Litearure under the Influence of Western Culture.

Papers V and VI.

(Subsidiary Language.)

Paper VII.

(Basic Languages.)

Paper VIII.

The following books are recommended :—

(1) Such portions from Beames' Comparative Grammar of Seven Aryan Languages as relate to Oriya in comparison with Bengali and Hindi.

(2) B C. Majumdar's Lectures on the History of Bengali Language—Lectures X, XI, XII and XIV.

Gujarati.

(Principal Subject.)

Paper I.

History of Gujarati Literature from the earliest times to A.D. 1900.
Special Subject. Parsi writers of Gujarati during the 19th century.

Books recommended–

K. M. Jhaveri. Milestones in Gujarati Literature, Volumes I-II.
D. C. Derasari. Sathina Sahityanu Digdarsan.
K. M. Jhaveri. " Parsi Gujarati Sahitya " in the *Vismi Sadi*.
A. B. Dhruva and I. J. S. Taraparewala. Selections from Gujarati Literature (Calcutta University), the Introductory essay to each writer.

Paper II.

Old Gujarati and Rajasthani :—

Padmanath. Kanhad De Prabandh (Derosari's edition).
Bhalan. Kadmabari (Kantawal's edition).
Rathor Prithvi Raj. Veli Krishna Rukmani (Tessitori's edition, Asiatic Society of Bengal).
Old Gujarati Collections published by the Baroda Government.

Paper III.

Mediæval and Modern Texts :—

Premananda and Dayaram. As in Selections from Gujarati Literature (Calcutta University).
Narmadashankar. Narma-Kavita.
Dalpatram. Forbes Biraha and Dalpat Kavya.
Kalapi. Kekarava.
Govardhanram Tripathi. Saraswotichandra.

Paper IV.

Special subjects :—

(*a*) Women Writers in Gujarati.
(*b*) Akho and Samal.

Papers V and VI.

(Subsidiary Language.)

Paper VII.

(Basic Languages.)

Paper VIII.

R. L. Turner. Gujarati Phonology (Journal of the Royal Asiatic Society, 1921).
L. P. Tessitori. Notes on the Grammar of Old Western Rajasthani (Indian Antiquary, 1914-16).
Sir G. A. Grierson. Linguistic Survey of India. Volume IX (Introduction to Gujarati and Rajasthani).
N. B. Davatia. History of the Gujarati Language.

Subsidiary Languages.

Papers V and VI.

Any *one* of the following :—

(i) Bengali.

Texts.

University Matriculation Selections for Prose and Poetry.

Grammar.

S. K. Chatterji. Bengali Self-Taught (Marlborough's Self-Taught Series).
Nakuleswar Vidyābhushan. Bengali Grammar.

History of Literature.

Students are recommended to consult Dineschandra Sen's History of Bengali Language and Literature and Introduction to Typical Selections from Bengali Literature.
S. N. Sen. Modern Bengali Literature ("Calcutta Review," January 1924).

(ii) Assamese.

Texts.

Sarveswar Kataki. Asamiyā Sāhitya Kosh.

Grammar.

Hemchandra Barua. Asamiyā Bykāran.

Literary History.

Debendranath Bezbarua. Asamiyā Bhāshā Aru Sāhityar Buarfijee.

(iii) Oriya.

Texts.

Balarāma Dās. Rāmāyana (Selection 1 as in Typical Selections from Oriyā, Volume I).
Nandakisore Bal. Nirjharini.
Biswanāth Kar. Bibidha-Prabandha.
Fakirmohan Senapati. Atmajiban Charita.

Grammar.

Rādhānāth Ray. Vyākarana Pravesa.
E. O. P. Hallam. Oriya Grammar.

Literary History.

Introductory Essays to Typical Selections from Oriya Literature.

(iv) Marathi.

Texts.

Gadyaratna Samuccay, Part I.
Navanit, pages 47-48, 159-71, 381-410.

Grammar.

Ramchandra Bhikaji Joshi. Praudabodh Vyākaran.
Kher. Marathi Grammar.

Literary History.

Bhave Maharashtra Saraswat.
M. K. Nadkarni. A short History of Marathi Literature.

(v) Hindi.

Texts.

Rupnarayan Pande. Bankim Nibandhavali Essays—1, 2, 3, 4, 7, 9, 10, 12, 13, 14, 15, 16, 19, 21, 22, 23, 24.
Maithili Saran Gupta. Meghnad Badh, Cantos 1 & 2.

Grammar.

Pandit A. P. Bajpai. Hindi Kaumudi.
Ramcharan Singh. Bhasa Prabhakar (Khadga Vilas Press).
Shibnarayan Lala. Saral Hindi Vyakaran.

Literary History.

Grierson. Vernacular Literature of Hindusthan.
Nanda Dulare Bajpeyi. Hindi Sahityaka Samkhipta Itihas.

(vi) Gujarati.

Texts.

Dhruba, A. B. Niti-Sikshan (Selections I-IV).
Anjaria and Karim Mohammad. Kabita-Praves (Parts I-II).
St Clair Tisdall. Simplified Grammar of the Gujarati Language (Trubner).
Taylor, G. P. The students' Gujarati Grammar (Thacker, Bombay).
Trivedi, K. P. Madhyavyakaran.
Taraporewala. Main Currents of Gujarati Literature ("Calcutta Review," January and February, 1925).

(vii) Urdu.

Texts.

Hasan Nizami. Krishen Biti (Story of Lord Krishna).
Tarana by Dr. Iqbal.
Ratan Nath Sarshar. Sair-i-Kuhsar (first 52 pages) of Volume I.
Hali. Rubais.

Grammar.

Palmer. Simplified Grammar of Hindustani, Persian and Arabic.
Green. A Practical Hindustani Grammar.
Forbes. A Hindustani Grammar.
Platts. A Hindustani Grammar.

Literary History.

Saxena. History of Urdu Literature.
Azad Ab-i-Hayat.

(*viii*) **Tamil.**

Texts.

Vivcka Vilakkam.
Seyyul Kovai.
Vasaka Thirattu.
Matriculation Selections (Madras University).

Grammar and Literary History.

Purnalingam Pillai. Primer of Tamil Literature.
Wickremasinghe. Tamil Grammar self-taught.
Pope. Tamil Handbook.
Pope. Catechism of Tamil Grammar, I-II.
Arden, Progressive Grammar.
Articles on Dravidian Languages (Encyclopaedia Britannica).

(*ix*) **Telegu.**

Texts.

Narshingam and Narasingharow, Ananda Readers, Parts III and IV.
Matriculation Selections (Madras University).

Grammar and History.

Brown. Telegu Grammar.
Morris. Simplified Telegu Grammar.
Arden. Telegu Grammar. 1895 ; Telegu Companion Reader, 1879.
Article on Dravidian Languages (Encyclopaedia Britannica).

(*x*) **Malayalam.**

Text-books will be announced later on.

(*xi*) **Kanarese.**

Texts.

Padya Sara, Part I, pages 1-39.
Katha Sangraha, Part I, pages 30-96.
Katha Sangraha, Part II, pages 265-292.
Kanakaluka (Lord Tennyson's "The Cup").
Matriculation Selections (Madras University).

Grammar and Literary History.

Spencer. Kanarese Grammar (Mysore, 1914). Sabdadarsa (Kanarese).
Rice, E. P. History of Kanarese Literature.
Article on Dravidian Languages, Encyclopaedia Britannica, 11th edition, Mysore Gazetteer.
Grierson's Linguistic Survey of India, Volume on Munda and Dravidian Languages.

(*xii*) **Sinhalese.**

Texts.

Sri Rahula Sangharaja of Totagamuwa. Kavyashekara (Chapter 10 only).
Gunawardhana. Subhashitaya, verses 26-75 (50 verses only).
Samarasekara. Sinhalese Translation of Dighanikaya, Vol. I (Samannaphala Sutta and Mahaparinibbhana Sutta only).

Grammar and Literary History.

Wickremasinghe. Sinhalese Self-taught (London, 1916).
Gunasekara. Comprehensive Sinhalese Grammar (Colombo, 1921).
Curulu. Amawatura (Chapters 2, 3 and 7 only).

(*xiii*) **Maithili.**

Texts.

Ramananda Thakur. Mahabharatsar.
Grierson. Krestomathly.
Chandra Jha. Ramayan.

Grammar and Literary History.

Grierson. Vernacular Literature of Hindusthan.
Grierson. Maithili Grammar. 2nd edition.
Gangapati Singh. Bal Maithilivyakaran.

(Basic Languages.)

Paper VII.

Any *two* of the following : –

(*i*) **Pali.**

Müller. Simplified Pali Grammar.
Victor Henry. Precis de Grammaire Pali.
Vidhusekhar Sastri. Pāli Prakāsa.
Intermediate Pali Selections. Published by the Calcutta University–

(*i*) Prediction of Kāladevala.
(*ii*) The Four Omens.
(*iii*) Devadatta plots against Buddha.
(*iv*) So eva so udāhu anno ?
(*v*) Padhānasutta.
(*vi*) Dhaniyasutta.

(*ii*) **Prakrit.**

Vararuci. Prākrita Prakāśa.
Rājasekhara. Karpūramañjarī
Woolner. Introduction to Prakrit.

(*iii*) **Persian.**

M. T. Dedachanji. First steps in Persian (Bombay).
M Kazim Shirazi. Sahl Amoz-i-Farsi Part II (omitting poetry portions).
M Hidayat Hussain. Gammar of Modern Persian (Macmillan & Co).
Kanga. Hints on the Study of Persian.
St. Clair Tisdall. Persian Conversational Grammar, pages 1-100.

Comparative Philology, 1938.

A. *Indo-Aryan Branch.*

Paper I.

General Principles of Philology and the Science of Language ; Growth and Change in Language ; Semantics ; Language Types and Classification of Languages ; History of the Science of Grammar and Linguistics in India and in the West.

Books prescribed -

Jespersen, O. Language (George Allen & Unwin).
Vendryes, J. Language (Kegan Paul).
L. Bloomfield. Language (British Edition , George Allen & Unwin, 1935).
Greenough, J. B. and Kitteridge, G. L. Words and their Ways in English Speech(Macmillan).
Encyclopaedia Britannica, 11th Edition - Article on " Philology."
Belvalkar, S. K. Systems of Sanskrit Grammar (Oriental Book Supplying Agency, Poona). (For reference only.)
Taraporewala, I. J. S. Elements of the Science of Language (Calcutta University).

Paper II.

Phonetics ; the Structure of the Vocal Organs ; Production and the Classification of Speech Sounds, with special reference to the Sound System of English and Bengali (or of Candidate's Mother Tongue) ; Phonetic Script ; Linguistic Palæontology as illustrated in the Indo-European Languages ; Outline of the History of Writing with special reference to the Scripts of India.

Books prescribed—

Noël-Armfield, G. General Phonetics (Heffer, Cambridge).
V. G. Childe. The Aryans (Kegan Paul).
Chatterji, S. K. A Brief Sketch of Bengali Phonetics (International Phonetic Association, London).
Chatterji, S. K. A Bengali Phonetic Reader (University Press, London).
Qadri, Dr. H. Mohiuddin. Hindustani Phonetics (Paris, 1930).
Petrie, Sir W. M. Flinders. Formation of the Alphabet (British Museum).
Encyclopædia Britannica, 11th Edition—Articles on "Accent," "Alphabet" and "Phonetics."

For reference—

Isaac Taylor. History of the Alphabet, Vols. I and II (London, 1899).
Siddheswar Varma. Phonetic Theories of the Ancient Indian Grammarians (Royal Asiatic Society, London).

Paper III.

Comparative Grammar of Old Indo-Aryan (Sanskrit).

Books prescribed—

Macdonell, A. A. A Vedic Grammar for Students (Oxford).
Uhlenbeck, C. C. Sanskrit Phonetics (Luzac).
Whitney, W. D. Sanskrit Grammar (Breitkopf and Hertel, Leipzig).
Macdonell, A. A. A Vedic Reader (Oxford), First Ten Suktas only.

For reference only—

Thumb. Handbuch des Sanskrit, 2nd Edition (Julius Groos, Heidelberg).
Speijer, J. S. Sanskrit Syntax (Brill, Leyden).
Sukumar Sen. Use of the Cases in Vedic Prose (Bhandarkar Oriental Research Institute, Poona).

Paper IV.

Historical Grammar of Middle Indo-Aryan (Pali and the Prakrits).

Books prescribed—

Woolner, A. C. An introduction to Prakrit, Second Edition (Punjab University).
Geiger. Pali Litteratur und Sprache (Grundriss der Indoarischen Philologie und Altertumskunde).
Inscriptions of Asoka, Rock Edicts 1-5.

Paper V.

Historical and Comparative Grammar of Modern Indo-Aryan (Bengali or the Candidate's Mother Tongue).

For Bengali.

Chatterji, S. K. Origin and Development of Bengali Language, Vols. I and II (Calcutta University).

For Hindustani (Hindi and Urdu) (for 1936 and 1937 also).

Prescribed books—

Mohiuddin Qadri. Hindustani Lisaniyyat (Allahabad).
Varma, Dhirendra. Hindi-Bhasha-ka Itihas (Allahabad, 1934).

For reference—

Sir Charles Lyall. Hindustani (Article in the Encyclopædia Britannica, 9th Edition).

Platts Hindustani Grammar. (London, 1877).

Sir G A Grierson. Linguistic Survey of India, Volume IX (Western Hindi).

Kellogg. Grammar of the Hindi Language (the Sections on Derivation of the Hindi Forms) (London, 1893).

S. K Chatterji Origin and Development of the Bengali Language (Introduction only)

Mohiuddin Qadri. Hindustani. Phonetics (Paris 1930).

Syam Sundar Das and Padma Narayan Acharya. Bhasha-Tattva (Allahabad, 1935).

Paper VI.

Essays (two essays to be chosen out of five subjects).

Alternative A.—Aryan and Indo-European Philology.

Paper VII.

Indo Iranian (Aryan) Philology, with Elements of Avesta and Old Persian.

Books prescribed

Taraporewala, I. J. S Selections from Avesta and Old Persian, First Series, Part I (Calcutta University): First six pieces only.

Tolman. Ancient Persian Lexicon and the Texts of the Achæmenian Inscriptions, Vanderbilt Oriental Series, Nashville, Tennesee (U.S.A.): Behistun, Columns I and II

Jackson, A V W. Avesta Grammar (W. Kohlhammer, Stuttgart).

Johnson, E. L Historical Grammar of the Ancient Persian Language (American Book Co)

Avestan Gathas by A. Meillet (Translated by Priyaranjan Sen, M.A.). (For reference only.)

Paper III

Indo-European Philology, with Elements of Greek.

Books prescribed-

Pharr, C Homeric Greek (D C. Heath, New York)

Wright, J. Comparative Grammar of the Greek Language (Oxford).

Buck, C D Comparative Grammar of Latin and Greek (Ginn & Co., Boston). (For reference only)

Alternative B Philology of the Non-Aryan Languages of India.

Paper VII (for 1936 and 1937 also)

Dravidian Philology, with Elements of Tamil.

Books prescribed

Linguistic Survey of India, Volume IV, on Munda and Dravidian Languages. General Introduction to Dravidian Languages and to Tamil, Malayalam, Telugu, Kannada, Gond, Brahui, Oraon and Maler

Pope G. U. Tamil Reader (Oxford) (*i*) Pieces in classical prose. (First Group of Selections), (*ii*) Selections from the Panchatantra

Wickremasinghe, M De Zilva Tamil Grammar Self taught (E Marlborough and Co, London).

Caldwell, R. Comparative Grammar of the Dravidian Languages (Kegan Paul) (for reference only).

Paper VIII (for 1936 and 1937 also).

Kol (Munda) and Tibeto-Burman Philology with Elements either of a Kol Speech or of Tibetan.

Books prescribed—

Nottrott, A. Grammar of the Kol Language (G. E. L. Mission Press, Ranchi).

Hoffman, J. Mundari Grammar, Introduction (Government Book Depot, Calcutta)

Bodding, P. O. Materials for a Santali Grammar (Scandinavian Mission, Dumka)

Texts in a Kol Language (Santali)—

(*a*) Linguistic Survey of India, Vol. IV—Santali Texts, with Grammar and Introduction.

(*b*) P. O. Bodding. A Chapter of Santal Folklore (Indian Institute, Royal Frederik University, Oslo, Norway, 1924) : Stories 3 (pages 58-64), 7 (pages 78-80) and 9 (last story only under 9 , from page 106 to page 110).

Bagchi, P. C. Pre-Aryan and Pre-Dravidian in India (Calcutta University).
Linguistic Survey of India. Introduction, Vol. III, Part I, and Vol. IV.
Jaeschke, H. A. Tibetan Grammar (Truebner).

Texts in Tibetan—

(*a*) Matriculation Course of Classical Tibetan (Calcutta University) : First Five Stories.

(*b*) Shes-rab-dong-bu (Calcutta University edition) : First Fifty Verses.

B.—Iranian Branch.

Paper I.

General Principles of Philology and the Science of Language ; Growth and Change in Language ; Semantics ; Language Types and Classification of Languages ; History of the Science of Linguistics in the East and in the West.

Books prescribed—

Jespersen, O. Language (George Allen & Unwin). Philosophy of Grammar (George, Allen & Unwin).

Vendryes, J. Language (Kegan Paul).

Greenough, J. B. and Kitteridge, G. L. Words and their Ways in English Speech (Macmillan).

McKnight, G. H. English Words and their Background (Appleton, New York).

Browne, E. G. Literary History of Persia, Vol. I, pages 1-88 (Unwin).

Encyclopædia Britannica, 11th Edition—Article on " Philology."

Paper II.

Phonetics : the Structure of the Vocal Organs, the Production and the Classification of Speech sounds with special reference to the Sound Systems of English and of Bengali (or of the Candidate's Mother Tongue), Phonetic Script ; Linguistic Palæontology as illustrated in the Indo-European Languages ; Outlines of the History of Writing with special reference to to the Scripts of Persia.

Books prescribed—

Mott, F. W. The Brain and the Voice in Speech and Song (Harper).

Noël-Armfield, G. General Phonetics (Heffer, Cambridge).

Chatterji, S. K. A Brief Sketch of Bengali Phonetics (International Phonetic Association, London).

Childe, V. G. The Aryans (Kegan Paul).

Petrie, Sir W. M. Flinders. Formation of the Alphabet (British Museum).

Encyclopædia Britannica, 11th Edition—Articles on "Accent," "Alphabet," " Cuneiform " and " Phonetics."

Isaac Taylor. History of the Alphabet, Volumes I and II (London, 1899).

Paper III.

Comparative Grammar of Old Iranian (Avestan and Old Persian).

Books prescribed—

Taraporewala, I. J. S. Selections from Avesta and Old Persian (Calcutta University, 1922): Haoma Yast, Sraosha Yast, the Zoroastrain Creed, the Three Prayers.

Tolman, H. C. Ancient Persian Lexicon and the Text of the Achæmenian Inscriptions (Vanderbilt Oriental Series, Nashville, Tennessee, U.S.A.): Behistun, Columns I and II.

Jackson, A. V. W. Avesta Grammar (W. Kohlhammer, Stuttgart).

Johnson, E. L. Historical Grammar of Old Persian (American Book Co.).

Meillet, A. Avestan Gathas (Translated by P. R Sen). (For Reference only.)

Paper IV.

Historical Grammar of Middle Iranian (Pahlavi).

Books prescribed—

Haug, M. Essay on Pahlavi.

Bharucha, S. D. Lessons in Pahlavi and Pazand, Parts. I-III (Parsi Panchayat, Bombay).

Unvala, J. M. King Husrav and his Boy (Paul Geuthner, Paris).

Salemann. Middle Persian Grammar (Translation by L. Bogdanov, Parsi Panchayat, Bombay).

Paper V.

Historical and Comparative Grammar of Modern Iranian (Persian).

Books prescribed

Platt, J. T. and Ranking, G. S. A. A Persian Grammar (Oxford).

Phillott, D. C. Higher Persian Grammar (Calcutta University). (For Reference only.)

Encyclopædia Britannica, 11th Edition Article on "Persian Language."

Paul Horn. Neupersische Schriftsprache (Grundriss der Iranischen Philologie). (For Reference only.)

Paper VI.

Essays (two essays to be chosen out of five given subjects)

Paper VII.

Sanskrit and Elements of Indo-Aryan Philology.

Books prescribed-

Macdonell, A A. Vedic Reader (Oxford): the following selections. I, 1, 35, 154; II, 12; III, 59; VII, 71, 48; VIII, 48; X, 14. 15, 90, 129. A Vedic Grammar for Students (Oxford)

Trivedi, K. P. The Sanskrit Teacher (Macmillen).

P. D. Gune. Introduction to Comparative Philology (Poona).

Paper VIII.

Arabic, with the Elements of Semitic Philology. Semitic Influence in the Development of the Persian Language.

Books prescribed-

Thatcher, G. W. Arabic Grammar (J. Groos, Heidelberg).

Thornton, F. du Pre and Nicholson, R. A. First Arabic Reading Book (Cambridge): Selections from the Quran.

O'Leary, De L. Comparative Grammar of the Semitic Languages (Trübner, 1923).

Encyclopædia Britannica, 11th Edition- Article on Semitic Languages.

Mental and Moral Philosophy.

Paper I.—History of Ancient and Mediæval European Philosophy.

Paper II.—History of Modern European Philosophy.

Paper III.—Indian Philosophy.

Papers IV and V.—Theory of Knowledge and Metaphysics.

Papers VI and VII.—Any one of the following subjects to be selected by the candidate, two papers being set in each :—(*i*) Psychology, (*ii*) Logic, (*iii*) Ethics and Social Philosophy, (*iv*) Philosophy of Religion, (*v*) some special Branch of Indian Philosophy.

Paper VIII.—Essay.

Paper I.—History of Ancient and Mediaeval European Philosophy.

Pre-Socratic Philosophy. The Sophists. Socrates. Socratic Schools. Plato. Aristotle. Stoics. Epicureans and Sceptics. New Platonism. Gnosticism. Patristic and Scholastic Philosophy.

Candidates are expected to have a special knowledge of the system of Plato and especially of the Republic of Plato.

Course of reading suggested—

Ueberweg. History of Philosophy.
Caird. Evolution of Theology in the Greek Philosophers.
Zeller. Plato.
Inge. The Philosophy of Plotinus.
De Wulf. History of Mediæval Philosophy.

Paper II.—History of Modern European Philosophy.

Descartes, Spinoza, Leibnitz, Locke, Berkeley, Hume, Kant, Fichte, Schelling, Hegel, Herbart, Lotze and Schopenhauer.

Candidates are expected to have a special knowledge of Kant's Critique of Pure Reason.

Erdmann. History of Philosophy, Volume II.

Watson. The Philosophy of Kant as contained in extracts from his own writings or N. Kemp Smith—Abridged Edition of Kant's Critique of Pure Reason.

Blackwood's Philosophical Classics—Spinoza, Fichte and Hegel.

(*i*) Leibnitz by R. Latta.
(*ii*) Dawn of Modern Thought by S. H. Mellone.
(*iii*) Locke, Berkeley and Hume by Morris.

Paper III.—Indian Philosophy.

Germs of Philosophic and Religious Thoughts in the Rig-Veda. The Upanisads : Reality, World, Soul, God, Ethics and Religion, Karma and Rebirth, Moksa. The theism of the later Upanisads. The main currents of thoughts, metaphysical and ethical, in the Bhagavadgita. The Carvaka theory. Buddhism : its relation to the Upanisads, the four Truths, Conception of Reality, Soul, Karma and Rebirth, Ethics. Nirvana. The four schools of Buddhism. Jaina Logic. Metaphysics and Ethics.

The Nyaya theory of Pramanas, Causality, God and Soul. The Vaisesika Categories and Atomism. The Samkhya theory of Purusa and Prakrti and their mutual relation. Cosmic evolution, nature of Cognition. The alleged Atheism of Kapila. Patanjali's view of God. The Purva Mimamsa : General character. Apurva. The theory of knowledge of Kumarila and Prabhakara. The Vedanta. Brahman. Jiva. Karma and its relation to Jnana according to Samkara and Ramanuja. Samkara on Adhyasa, Maya and Avidya. Ramanuja's objections against Maya. His conception of reality. Personality of God. Moksa in the different systems.

Dasgupta. History of Indian Philosohpy.
Kokileswar Sastri Advaita Philosophy.
Radhakrishnan Indian Philosophy, Vols. I and II.
Urquhart. Vedanta and Modern Thought.
Seal. The Positive Sciences of the Ancient Hindus, Chapters 1 and VII.
Sarkar, M. N. System of Vedantic Thought and Culture.

A. B. Keith. Indian Logic and Atomism.
M. Hiriyanna. Outlines of Indian Philosophy.
S. K. Das. A Study of the Vedanta, 2nd Edition, published by the Calcutta University.
Prof. Kuppuswami Sastri. Primer of Indian Logic.
Nalinikanta Brahma. Philosophy of Sadhana.
A. C. Das. Sri Aurobindo and Future of Mankind.
Hume's Thirteen Principal Upanisads. Rhys David's Dialogues of Buddha. Samkarabhasya and Ramanujabhasya on the Vedanta Sutras may also be consulted.
In preparing for Papers I, II and III, candidates are advised to make as much use as possible of the original texts many of which are now accessible in good English Translation.

Papers IV and V.—Theory of Knowledge and Metaphysics.

The analysis of knowledge-relation. Subject and Object. Image, Idea and Meaning as factors in Logical Thought. The problem of Predication. Universals. Relations, External and Internal. Perception, Conception and Intuition. Unity and Continuity of Intellectual Life.
Thought and reality. The Criterion of Truth. Coherence, Correspondence, Pragmatist Theory. Degrees of Truth. Error. The Svatahprāmānya and Paratahprāmānya theories of the Hindu thinkers.
The relation of Metaphysics to Psychology Logic and Ethics. Space, Time and their mutual relations. Change and Casuality. Substance. The Nature of Reality. Matter, Life and Consciousness. Evolution. Mechanism and Teleology. The relation of the Absolute to the World of Becoming. Maya. The Individual Self. The Problem of Values.
Issues and tendencies in Contemporary Philosophy. Absolute Idealism : Green, Caird, Bradley, Bosanquet and Royce. Neo-Idealism : Croce and Gentile. Neo-Realism : Russell and Alexander. Critical Realism. Bergson's Evolutionism.
Bradley. Appearance and Reality (Chapters I-IV, chapter on Thought and Reality, also appendices).
Bosanquet. The Principle of Individuality and Value.
Bergson. Introduction to Metaphysics.
Haldar. Neo-Hegelianism.
Broad. The Place of Mind in Nature.
Alexander. Space, Time, Deity, Vols. I and II.
Hobhouse. Theory of Knowledge.

OPTIONAL SUBJECTS.

I.—Psychology.

General and Physiological Psychology.

The rôle of Psychology as a Science ; Methods of Psychology ; Facts of mental life—Sensation, Image, Perception, Attention. Imagination, Association, Memory and Recognition. Thought, Feeling and Emotion. Conation. The Concepts of Psychic Elements—their modes of combination.
The general structure of the nervous system—structure and function of the sense organs, cerebral localisation—the different bodily organs and their influence upon the mental life.

Historical development of the fundamental concepts.

The standpoints of Psychology. Self-Consciousness. The unconscious and the sub-conscious. Psychic causality. Mental activity. The relation between body and mind.

Comparative and Abnormal Psychology.

Criteria of Mind and Intelligence. Types of animal behaviour. Learning process. Course of Mental development.
Psychic determinism. Methods of investigation. The Unconscious and Repression. The Sexual Instinct and Perversions. Hypnotism. Dream. Psychopathology of every day life, Neuroses, Psychoneuroses and Psychoses.
McDougall. Outline of Abnormal Psychology.
Titchener. Text-book of Psychology (Selections).
Ward. Psychological Principles (Selections).
McDougall. Outline of Psychology (Selections).
Woodworth. Contemporary Schools of Psychology.

II.—Logic.

Relation to Psychology and Metaphysics. Formal and Material Logic. Thought and Language. Names and their import. Extension and Intension of terms. Predicables. Judgment. Theories of Judgment. Varieties of Judgment. Negation. Disjunction.

Inference. Theories of Inference. Deduction and Induction. Varieties of Deductive Inference. Syllogism, Discovery, Proof, Causal relation. Enumeration. Induction Mathematical Reasoning

Scientific Induction. Hypothesis. Bacon. Newton. Whewell and Mill on the Inductive Method. Laws of Nature. Necessity in Knowledge. The Laws of Thought. Explanation and its limits.

Logic as Dialectic. Plato, Kant, and Hegel. Recent developments in logical thought. Schiller, Russell, Couturat, Johnson.

Mill. System of Logic.

Bradley. Principles of Logic.

Johnson. Logic, Parts I and II.

III.—Ethics and Social Philosophy.

Scope and Method of Ethics. Relation to other Sciences. Psychology of Ethics. Moral Judgment. Intention. Character. The Moral Idea. Ethical Theories. Hedonism. Rationalism. Intuitionism. Idealism. Evolution and Ethics.

Moral Progress. Moral Development of the Individual. Rights and Obligations. Virtues. The Family. The State. Property. Punishment.

Metaphysics of Ethics. The Ultimate Value of the Moral Judgment. Free Will. Morality and Religion. Future Life.

Social Philosophy. Scope and History. Relation to other Sciences. Society and its implications. The Social Mind. Social development in general. Family. Theories of Development. Forms of Marriage. Social Progress. Laws and Lands. Society and the Individual. The nature and ideal of Society.

Kant. Fundamental Principles of the Metaphysic of Morals.

Sidgwick. Methods of Ethics.

Giddings. Principles of Sociology.

Bradley. Ethical Studies (2nd Edition).

Blackmar and Gillin. Outlines of Sociology—(New York: The Macmillan Company).

IV.—Philosophy of Religion.

Relation to Science, Art, Psychology, Anthropolgy, Ethics and Philosophy. Analysis of the Religious Consciousness. The different elements of cognition, emotion and will. The feeling of the *Numinous*. Faith and Reasons. Mysticism. The place of tradition in religious life. The nature of religious authority. The idea of God. Origin and development. Proofs for the existence of God. Nature and attributes of God. Personality of God. Absolute and God.

Time and Eternity. Immanence and Transcendence. Incarnation. The problem of creation. Pantheism and Theism. Cosmic evolution. Miracles.

The Individual Self. Relation to God. Freedom of self and divine sovereignty. The problem of evil and suffering. Pre-existence and Immortality. Karma and Rebirth. Life Eternal.

Hegel. Philosophy of Religion, Vol. I.

Lotze. The Philosophy of Religion.

Pringle-Pattison. The Idea of God.

Sorley. Moral Values and the Idea of God (Gifford Lectures).

Taylor. Faith of a Moralist.

Otto. Idea of the Holy.

W. Schmidt. Origin and Growth of Religion.

V.—Special Branch of Indian Philosophy.

(Optional.)

Nyaya—Vaisesika Group—

Nyaya Sutras with Vātsyāyana's Bhasya.

Prasastapāda's Padarthadharmasamgraha.

Visvanatha's Bhasapariccheda with Sidhantamuktavali.

2. *Samkhya—Yoga Group—*

Isvarakrsna's Sāmkhyakārika with Vacaspati's Tattvakaumudi.
Samkhya Sutras with Vijnanabhiksu's Samkhyapravacanabhasya.
Yoga Sutras with Vyasabhasya and Tattvavaisaradi, 1st two Chapters.

3. *Vedanta Group—*

The Vedanta Sutras with the Bhasyas of Samkara and Ramanuja, Adhyaya 1, pada I, and Adhyay II, padas I and II. Vedantaparibhasa.

4. *Bauddha-Jaina Group—*

Nagarjuna's Madhyamika Karika with Candrakirti's Vrtti.
Dravyasamgraha and Syadvadamanjari.

5. *Translation Group—*

The Vedanta Sutras with Commentaries of Samkara and Ramanuja, Adhyaya 1, pada I and Adhyay II, padas I and II. Thibaut's Translations.
Samkhya Karika with Tattvakaumudi, Jha's Translation.

Experimental Psychology.

Paper I.

(Physiological and General.)

Starling. Physiology (latest edition)—The pages about the Nervous System.
Titchener. Text-book of Psychology.
Myers. Text-book of Experimental Psychology.
Murphy. Historical Introduction to Modern Psychology.
Handbook of General and Experimental Psychology—Edited by Murchison.
Pieron. Thought and the Brain.
Wheeler. The Science of Psychology.

Paper II.

(Abnormal Psychology.)

Jung. Analytical Psychology.
Freud. Hysteria and other Psychoneuroses.
Freud. Introduction to Psycho-analysis.
Jones Papers on Psycho analysis.
Bose. The concept of Repression.
McDougall. Outlines of Abnormal Psychology.
Freud. New Introductory Lectures.

Paper III.

(Animal Psychology.)

Washburn. Animal Mind.
Alverdes. Social Life in the Animal World.
Kohler. Mentality of Apes.
Warden, Jenkins Warnes. Introduction to Comparative Psychology.

Paper IV.

(Child and Educational Psychology.)

Koffka. The Growth of the Mind.
Thorndike. Human Learning.
Freeman. Mental Tests.
Sandiford. Educational Psychology.
Murchison. Fundamental of Child Psychology.
Descouders. The Education of Mentally Deficient Children.

Papers V—VIII.

(Practical.)

Brown. Essentials of Mental Measurement, 3rd Edition, 3 chapters, I-III.
Sanford. Experimental Psychology.
Myers. Text-book of Experimental Psychology, Volume 2.
Whipple. Physical and Mental Tests, Volumes 1 and 2.
Titchener. Students' Manuals—Qualitative and Quantitative.

History.

Paper I.—Selected Period of English History (Reign of Queen Victoria).

Low and Sanders. Political History of England, 1837—1901.
Ramsay Muir. Short History of the British Commonwealth, Volume II (Relevant Chapters).

For reference—

Cambridge Modern History, Volumes X-XII (Relevant Chapters).
Cambridge History of British Foreign Policy, Volumes II, III.
Marriott. England since Waterloo.
Hearnshaw. Prime Ministers of the 19th Century.
Morley. Life of Gladstone.
Ramsay. Peel.

Paper II.—Selected Period of Indian History (600 B. C. to 900 A. D.)

V. A. Smith. Early History of India (4th edition).
Raychaudhuri. Political History of Ancient India (latest edition).
D. R. Bhandarkar—Asoka (latest edition).
D. R. Bhandarkar—Carmichael Lectures, First Series.
Monahan. Early History of Bengal.
Cambridge History of India, Volume I, Chapters VIII-X, XII-XXIV.

For reference—

Sir R. G. Bhandarkar. Early History of the Deccan. (Revised by Prof. D. R. Bhandarkar).
Rhys Davids. Buddhist India (Chapters I-VI).
Ghoshal Hindu Revenue System.
Manu. Institutes, Chapters 2, 3, 7, 8, 10.
Kautilya. Arthasastra, Books 1, 2, 5, 6, 7, 11.
Krishnaswami Aiyangar. Ancient India, Chapter VI.
Megasthenes. Indica (Pub. by Chakravarti, Chatterjee and Co.).
Yuan Chwang. Records (translated by Watters).
Periplus of the Erythrean Sea. Translated by Schoff.
R. C. Majumdar. Outline of Ancient Indian History and Civilisation.
N. C. Banerjee. Kautilya, Volume I.
H. C. Ray. Dynastic History of Northern India (Early Mediæval Period).
J. B. Phear. Glimpses of Old India as seen through the pages of Manu (*Indian Antiquary*, Volume IV).

Paper III.—General History of the Ancient East.

Breasted. History of Egypt.
Hall. The Ancient History of the Near East (latest edition).

For reference—

Rogers. History of Ancient Persia.
Moret. The Nile and Egyptian Civilisation.
Breasted. Development of Religion and Thought in Ancient Egypt.
Jastrow. Civilization of Babylonia and Assyria.
Olmstead. History of Assyria.

Paper IV.

Constitutional History of England.

(To be studied with greater stress on the period from 1485 to 1832)

Adams Constitutional History of England.
Maitland Constitutional History of England
Stubbs Constitutional History of England
Erskine May Constitutional History of England
Pollard. Evolution of Parliament
Tanner. Constitutional Conflicts of the 17th Century

For reference

Adams and Stephens Select Documents
Tanner. Tudor Constitutional Documents
Prothero. Statutes and Constitutional Documents (1558 1625)
Gardiner Constitutional Documents of the Puritan Revolution (1625-1660)
Robertson Select Statutes, Cases and Documents.

Paper V.

International Law

Lawrence. Principles of International Law (latest edition)
Pit Cobett Leading Cases on International Law (new edition) Two Volumes
Pollock. League of Nations

For reference

Oppenheim International Law Two Volumes
Hall International Law (Higgin's edition)
P N Banerjee International Law in Ancient India
Garner Development of International Law in the 20th Century.
Ten years of World Co-operation. (Published by the League Secretariat)

Papers VI and VII.

Any one of the following subjects.

(i) History of Islam

Paper VI.

Muir Caliphate Rise, Decline and Fall
Khuda Bukhsh Islamic Civilisation
Khuda Buhksh. Orient under the Caliphs
Ameer Ali History of the Saracens
Hitti Origins of the Islamic State.

For reference

Goldziher Mohammad and Islam
Aghnides. Mohammadan Theories of Finance.
Cambridge Mediæval History, Volume II, Chapters 10-12, Volume IV, Chapter on the Abbasides

Paper VII

Cambridge History of India, Volume III
Vincent Smith Akbar
Beni Prasad History of Jehangir
Sarkar History of Aurangzib (one volume edition)

For reference

Thomas Chronicles of the Pathan Kings of Delhi.
Elliot and Dowson History of India
Rogers and Beveridge Tujuk-i-Jahangiri
Irvine. Later Mughals.
Moreland Agrarian System of Moslem India

(ii) Special Period of Indian History.

One of the following alternative courses—

A.—History of Bengal—1757-1793.

Mill and Wilson. History of British India.
Monckton Jones. Warren Hastings in Bengal
R. C. Dutt. Economic History of India under Early British Rule.
Fifth Report of the Select Committee on the Affairs of the East India Company, Bengal Presidency, including Grant's Analysis, edited by Firminger.
J. C. Sinha. Economic Annals of Bengal.
Cambridge History of India, Volume V.
Aspinall. Cornwallis in Bengal.
Ascoli. Early Revenue History of Bengal.

For reference—

Forrest—Selections from the State Papers of the Governors-General of India (Warren Hastings).
Gholam Hossein Khan. Siyar-ul-Mutaqherin.
Verelst. View of English Government in Bengal.
Bolts. Considerations on Indian Affairs.
Forrest. Life of Clive.
Gleig. Warren Hastings.
Burke. Speeches on the Impeachment of Warren Hastings.
Stephen. Nuncomar and Impey.
Beveridge. Trial of Nandakumar.
Long. Selections from the unpublished Records of Government.
Ross. Correspondence of Charles, First Marquis Cornwallis.
Ramsbotham. Studies in the Land Revenue History of Bengal.
Forrest. Selections from the State Papers of the Governors-General of India (Cornwallis).
Dasgupta. Central Authority in British India.
Vansittart. Narratives.
Field. Introduction to the Bengal Regulations.

B.—History of the Rajputs (from the advent of the Muhammadans in India to the treaty with the English, 1818).

History of the Rajputs (916-1818)

D R Bhandarkar Foreign Elements in Hindu Population (Ind. Ant., 1911)
R. C. Majumdar. The Gurjara-Pratiharas. (Journal of the Department of Letters).
H. C. Ray. Dynastic History of Northern India, Volume I, Chapters VIII, IX and X.
V. A. Smith. The History of Coinage of the Chandel Dynasty of Bundelkhand (Ind. Ant. XXXVII).
G Buhler. Eleven land-grants of the Chalukyas of Anahilvada (Ind. Ant., Volume VI).
H. B. Sarda. On the Prithviraja-vijaya Mahakavya (J. R. A. S., 1913).
Tod. Annals and Antiquities of Rajasthan (Ed. by W. Crooke).
Pandit Ramkarna. History of the Rathores (Sir Ashutosh Mookerjee Silver Jubilee Volumes), Volume III, Part II.
C. V. Vaidya. History of Mediaeval Hindu India (Volumes II and III).

C.—History of the Marathas.

Grant Duff History of the Mahrattas (Oxford University Press).
Ranade. Rise of the Maratha Power, Volume I.
Ranade. Introduction to the Peshwas' Diaries.
S. N. Sen. Administrative System of the Marathas.
S. N. Sen. Military System of the Marathas.

For reference—

S. N. Sen. Documents and Extracts relating to Maratha History, Volume I. Siva Chhatrapati (Calcutta University). Volume II, Foreign Biographies of Sivaji.
Sardesai. Main Currents of Maratha History.
Malcolm. Memoir of Central India, Volume I, Chapters 5, 6 and 7.
Sarkar. Sivaji and his Times.
Forrest. Selections from the Letters, Despatches, and other State Papers preserved in the Bombay Secretariat---Maratha Series.
Owen. Selections from Wellington's Despatches.
Elliot and Dowson. History of India, Volumes VII and VIII.
Aitchison Treaties, Engagements and Sunnuds relating to India and neighbouring countries.

D. - History of the Sikhs.

Cunningham. History of the Sikhs.
Macauliffe. The Sikh Religion.
Mushan Fani. Dabistan-i Mazahib, Volume II (Translated by Troyer and Shea).
Irvine. Later Mughals, Volume I.
Gough and Innes. The Sikhs and the Sikh Wars.
Bell. Annexation of the Punjab.
N. K. Sinha. Ranjit Singh.

For reference

M. Latif. History of the Punjab.
Gokulchand Narang. The Transformation of Sikhism.
Lepel Griffin. Ranjit Singh.
Baird. Private Letters of the Marquis of Dalhousie.
Teja Singh. Asa-di-Var.
Despatches of Gough and Hardinge.
Prinsep. Origin of the Sikh Power in the Punjab.
Malcolm. Sketch of the Sikhs.
Osborne. Court and Camp of Ranjit Singh
Aitchison. Treaties, Engagements and Sunnuds relating to India.
Honigberger. Thirty-five years in the East.
Carmichael Smyth. The Reigning Family of Lahore.
Teja Singh. Growth of Responsibility in Sikhism.

(*iii*) *The Constitutional History of British India and the British Dominions.*

Keith. The Constitutional Law of the British Dominions.
Ilbert. The Government of India: Historical Survey.
Keith. A Constitutional History of India (1600 1935)

For reference

Keith. Selected Speeches and Documents on British Colonial Policy Volumes I and II, 1763-1917.
Keith. Speeches and Documents on the British Dominions (1918-1931).
Lord Durham's Report, Edited by Lucas.
Egerton. Federation and Unions within the British Empire.
P. Mookerjee. Indian Constitutional Documents.
Keith. Speeches and Documents on Indian Policy, Volumes I and II, 1750-1921.
Statute of Westminster, 1931.
Keith. Responsible Government in the Dominions (latest edition).
Kennedy. The Constitution of Canada.
Brand. The Union of South Africa.
Barra O'Brian. The Irish Constitution.
Cowell. Courts and Legislative Authorities in India.
Horne. Political System of British India.
Montagu-Chelmsford Report.
Butler Committee Report.
Simon Commission Report
Proceedings of the Indian Round Table Coference, 1930-32.
Keith. Governments of the British Empire.
The Government of India Act, 1935.

(iv) Modern History of China and Japan.

(China)

Vinacke H. M. History of the Far East in Modern Times.

For reference—

Sih Gung-Cheng. Modern China—A Political Study.
Bland and Backhouse. China under the Empress Dowager.
H M Vinacke. Modern Constitutional Development in China.
S. H F MacNair Modern Chinese History, Selected Readings.
Willoughby. Foreign Rights and Interests in China 2 Volumes (New Edition).
Tang Leang-Li. The Inner History of the Chinese Revolution.
The Lytton Report on Manchuria (League of Nations).
Leonard S. Hsu Sun-Yat-Sen—His Political and Social Ideals.

(Japan).

W. M. McGovern. Modern Japan. its Political, Military and Industrial Organisation.
George Uyahara. Political Development of Japan, 1867-1909.
Count Okuma. Fifty-years of New Japan
Quigley. Japanese Government and Politics.
MacLaren. Political History of Japan during the Meiji Era.

(v) Economic History of England and India.

(A) England.

Lipson. Economic History of England, Volumes I, II and III.
Bland. Brown and Tawney. English Economic History, Select Documents.
Ashley. Economic Organisation of England.
Meredith. Economic History.
Hammond. Rise of Modern Industry.
Webb. History of Trade Unionism.
Trail. Social England. Volume VI (Economic Section).
Cunningham. Growth of English Industry and Commerce.

(B) India.

Imperial Gazetteer of India. Volumes III & IV (Economic Section).
V. Anstey. Economic Development of India.
R. C. Dutt. Economic History of India under Early British Rule.
R. C. Dutt. India in the Victorian Age.
J. C. Sinha. Economic Annals of Bengal
Ascoli. Early Revenue History of Bengal.
Report of the Indian Industrial Commission.

(vi) Comparative Politics.

Bryce. Modern Democracies.
Sidgwick Development of European Polity.
Ghoshal. Hindu Political Theories.
Greenidge. Greek Constitutional History.
Greenidge. Roman Public Life.
Munro. Governments of Europe.

For reference—

Ogg. European Governments and Politics.
Maine. Ancient Law (Ed. Pollock).
Coulanges. Ancient City (Tr. Small).
Aristotle Constitution of Athens.
Warde Fowler: The City States of the Greeks and Romans.
Lowell. The Government of England.
Marriott. Mechanism of the Modern State.
Bryce. American Commonwealth.
The Government of India Act, 1935.

(*vii*) *Modern Europe*– 1815-1914. (With special reference to the period from 1848 to 1914.)

Hazen, C. D. Europe since 1815.
Rose, J. Holland. Development of European Nations.
Bourgeois, E. History of Modern France.
Ward, A. W. Germany.
King, Bolton. History of Italian Unity.
Marriott, J. A. R. The Eastern Question.
Gooch. Modern Europe, 1878-1919.
Skrine. The Expansion of Russia.
Leger. A History of Austria-Hungary.
Mowat. The Concert of Europe.

For reference

Webster, C. K. The Congress of Vienna.
Simpson, F. A. Louis Napoleon and the Resettlement of the French Empire.
Fisher, H. A. L. Bonapartism.
Lipson. Europe in the 19th Century.
Grant Robertson. Bismark.
Cesaresco, Countess. Cavour.
King, Bolton Mazzini.
Cambridge History of British Foreign Policy (Volumes II and III).
Cambridge Modern History, Volumes X, XI and XII.
Kirkup. History of Socialism.
Bodley. The Third Republic.

(*viii*) *Anthropology*.

Paper VI.

Outlines of Physical Anthropology.

Haddon. Races of Man.
Chanda. The Indo-Aryan Races.
Giuffrida-Ruggeri. Systematic Anthropology of Asia (Tr. Chakladar).

For reference

Boule. Fossil Men.
Dixon. Racial History of Men.
Denikker. The Races and Peoples of the World.
Pittard. Race and History.

Paper VII.

Outlines of Cultural Anthropology.

Risley. The Peoples of India.
Mitra. Pre-Historic India.
Wissler—An Introduction to Social Anthropology.

For reference —

Kroeber. Anthropology.
Census of India, 1911 and 1921. Chapters on Caste and Occupation.

Ancient Indian History and Culture.

Compulsory Papers.

Paper I. –General History of Vedic and Epic India.

The Cambridge History of India, Volume I, Chapters III, IV, V, IX, X and XI.

Hopkins. The Social and Military Position of the Ruling Caste in Ancient India. (J. A. O. S., Vol. XIII).

Dr. Raychaudhuri. Studies in Indian Antiquities –Part I.

Dr. Raychaudhuri. Political History of Ancient India (latest ed.), Part I.

Dr. Das. Rig. Vedic Culture.

Sreenivas Iyenger. Life in Ancient India.

Winternitz. History of Indian Literature. Volume I (Calcutta University).

For reference—

V. Gordon Childe. The Aryans.
Macdonell and Keith. Vedic Index.
D. R. Bhandarkar. Some Aspects of Hindu Polity.
Kaegi. Rig Veda.
Jacobi. Das Rāmāyana.
Hopkins. The Great Epic of India.
Muir. Sanskrit Texts, Vol. V.
Pargiter. Ancient Indian Historical Tradition.
N. K. Siddhanta. The Heroic Age of India, Chapter II.
Zimmer. Altindisches Leben, Book I, Chapter II. Book II. Chapter I.
Das Rig-Vedic India (2nd edition).
S. Pradhan. Chronology of Ancient India.

Papers II and III.—Political History of the Post-Epic Period.

V. A. Smith. Early History of India (4th edition).
Dr. D. R. Bhandarkar. Asoka (Latest edition).
Bombay Gazetteer, Volume I.
Dr. Raychaudhuri. Political History of Ancient India (Latest edition).
Dr. D. R. Bhandarkar. Carmichael Lectures, First Series, 1918.
Dr. R. G. Basak. History of North-Eastern India.
Inscriptions of the Kings of Ancient Bengal.
The Cambridge History of India, Volume I, Chapters II, VII, XIII-XXIV.
Dr. H. C. Ray. The Dynastic History of N. India. (*Early Mediæval Period*). Volumes I and II.

For reference—

Stein. Rājataraṅgiṇī (Introduction).
Monahan. The Early History of Bengal.
Sewell. The Historical Inscriptions of Southern India.
N. Ray. Harsha Siladitya : a revised study (Historical Quarterly, Dec. 1927).
R. D. Banerjee. The age of the Imperial Guptas.
Padmanath Bhattacharyya. Kāmarūpaśasanāvali.
Radhakumud Mookerji. Harsha.
V. A. Smith Asoka (3rd edition).
Imperial Gazetteer. Indian Empire, Volume II.
R. C. Majumdar. Gurjara-Pratiharas (Journal of the Department of Letters, Calcutta University, Volume X).
R. C. Majumdar. The Early History of Bengal.
R. C. Majumdar. Harshavardhana—A critical study (Journal of the Bihar and Orissa Research Society, 1923).
Pargiter. Dynastics of the Kali Age.
B. C. Law. Ancient Mid-Indian Kshatriya Tribes.
Hultzsch. Corpus Inscriptionum Indicarum, Volume I. Introduction.
Girindramohan Sarkar Early History of Bengal (Sena period).
Gopalan. The Pallavas of Kanchi
Nilakanta Sastri. The Pandyan Kingdom.

Paper IV.—Historical Geography of Ancient India.

Cunningham. The Ancient Geography of India. (Published by Chakravarty, Chatterjee and Co.).
Watters. On Yuan-Chwang.
Fleet. The Topographical List of the Brihat Saṁhitā, Indian Antiquary, 1893 (pp. 169-195).
Pargiter. Translation of the Mārkaṇḍeya Purāna (Bhuvanakosha only).
Raychaudhuri. Studies in Indian Antiquities (Geographical Sections).
H. C. Ray. Maps in The Dynastic History of N. India.
E. J. Rapson. Map facing p. 1 of Coins of the Andhra Dynasty.

For reference—

Fa Hien. Travels.
Ptolemy (Ed. by Majumdar). Ancient India.
Macdonell and Keith. Vedic Index (Geographical portions).
Foucher. Notes on the Ancient Geography of Gandhara.
Sir John Marshall. A Guide to Taxila.
Nundolal Dey. Geographical Dictionary of Ancient and Mediæval India.
Schoff. The Periplus of the Erythraen Sea.
Sylvian Levi. Pre-Aryan and Pre-Dravidian in India (Tr. by P. C. Bagchi).

Optional papers.

In addition to the compulsory papers candidates will have to offer one of the following Groups : -

I. Archæology.

(A)

Papers V and VI. - Epigraphy

Bühler. Indische Palaeographie (Translated by Fleet, *India Antiquary*, 1904, Vol. XXXIII Appendix), also Bühler's Palaeographic Tables.

A thorough knowledge of the scripts of the inscriptions recommended for papers V and VI will be expected One practical question to test the candidates' knowledge of palaeography (Brahmi and Kharosthi) will be compulsory in each paper.

Paper V

(1*a*). Inscriptions of Asoka and Dasaratha.
1(*b*) Mahasthana inscription, Ep. Ind., Volume XXI.
2 Piprahwa Vase inscription.
3. Sohgaura copper plate inscription.
4 Hathigumpha inscription of Kharavela
5. Bharhut pillar inscription of Dhanabhūti.
5(*a*). Ayodhya inscription of Dhanadeva.
6 Besnagar inscription of Heliodoros.
7. Nanaghat inscription of Queen Naganikā.
8. Nasik and Karle inscriptions of Gautamīputra Sātakarṇi.
9. Nasik inscription of Gautamī Bala-śrī (dated in Year 19 of Pulumavi).
10. Nasik and Karle inscriptions of the time of Pulumavi.
11. Nasik, Junnar and Karle inscriptions of the Kshaharatas
12. Junagadh inscription of Rudradāman.
13. Prakrit Charters of the Pallavas
14. Pardi inscription of the Traikutaka Dahrasens.
15. Nagarjunikonda inscriptions of the Ikshvākus.
16. Swat relic vase inscription of the (Greek) Theodoros.
17. Taxila copperplate inscription of Patika of the Year 78.
18. Mathura Lion capital inscriptions
19 Takht-i Bahi inscription of Gudnvhara (Gondophernes) of the Year 103.
20. Panjtar inscription of the Maharaya Gusana of the Year 122.
21. The Kalawan inscription of the Year 134 of Azes.
22. Taxila Silver Scroll inscription of the Year 136.
23. Khalatse inscription (of Uvima Kavthisha) of the Year 187
24. Taxila silver vase inscription of the Year 191.
25. Kanishka casket inscription.
26 Zeda inscription of Kanishka
27. Sui Vihar inscription of Kanishka
28. Manikiala stone inscription of Kanishka (Year 18)
29. Ara inscription of the Year 11 (of Kanishka II)
30. Wardak Vase inscription of the Year 51 (of Huvishka).
31. Mora Stone slab inscription of Rajuvula.
32. The Amohini Votive tablet.
33. Sanchi inscription of Vasishka.
34. Pabhosa inscription of Udaka
35 Sarnath and Sahet Mahet inscriptions of Kanishka
36. Rangarh cave inscription.

Paper VI

1. Allahabad Prasasti of Harishena (No. 1 of CII, Volume III).
2. Meharauli Iron pillar inscription of Chandra.
3. Udayagiri Cave inscriptions of Chandragupta II.
4 Mathura inscription of Chandragupta II (Year 61)
5. Sanchi inscription of Chandragupta II.
6. Bilsad Pillar inscription of Kumāragupta (Year 96)
7. Mankuwar image inscription of Kumāragupta
7(*a*). Damodarpur plates of Kumārgupta (Years 124 and 128).
8. Bhitari pillar inscription of Skandagupta
9 Junagadh rock inscription of Skandagupta.
10. Poona Plates of Prabhāvatī
11 Mandasor inscription of Kumāragupta and Bandhuvarman.
12. Sarnath inscriptions of Kumāragupta II and Budhagupta.

13. Mandasor inscription of Yaśodharman.
14. Aphsad inscription of Ādityasena.
15. Haraha inscription of (the Maukhari) Iśānabarman.
16. Omgodu grants of the Pallavas.
17. Talagunda inscription of Kakushthavarman.
18. Chandravalli inscription of Mayūraśarman.
19. Banskhera grant of Harsha.
20. Gwalior Praśasti of Bhoja.
21. Sarnath inscription of Kumāradevī.
22. Khalimpur inscription of Dharmapāla.
23. Nalanda inscription of Devapāla.
24. Deopara inscription of Vijayasena.
25. Ganjam plates of the time of Śaśāṅka.
26. Susunia inscription of Chandravarman.
27. Nidhanpur inscription of Bhāskaravarman.
28. Bilhari inscription.
29. Nagpur praśasti of the Paramaras.
30. Veraval praśasti of Bhava-Brihaspati.
31. Vadnagar praśasti of Kumārapāla.
32. Veraval inscription of Arjuna.
33. Samoli stone inscription of Silāditya (Guhila) 646 A.D.
34. Chirwa inscription of Samarasiṁha (1273 A.D.).
35. Delhi Siwalik pillar inscription of Vigraharāja.
36. Ajmere stone inscriptions of the time of Vigraharāja (Lalitavigharaja and Harakelināṭakas).
37. Benares grant of Lakshmi-Karṇa (1042 A.D.) and Paikor decorative pillar inscription.
38. Khajuraho stone-inscription of Dhaṅga (Candel—953-54 A.D.).
39. Changu Narayan Pillar-inscription of Mānadeva.
40. Vizagapatam grant of Anantavarman.
41. Urlam plates of Hastivarman, E.I., Volume XVIII, pp. 330-34.
42. Aihole inscription of Pulakesin II.
43. Sanjam grant of Amoghavarsha.
44. Kasakudi plates of Nandivarman, South Indian Inscriptions, Vol. II, 342.
45. Tirumalai inscription (Translation only).
46. Sunderban grant of Śrimaḍommanapala (I H Q, 1934, pp. 321 ff.).

Paper VII and VIII—Numismatics.

V. A. Smith. Catalogue of the Coins in the Indian Museum (up to the end of the Gupta period).
Percy Gardner. Catalogue of Indian Coins in the British Museum.
Rapson. Catalogue of Coins (Andhras, Western Kshatrapas, etc.).
Allan. Catalogue of the Coins of the Gupta Dynasties
Whitehead. Catalogue of the Coins in the Punjab Museum, Lahore, Volume I.
Bhandarkar. Carmichael Lecturer, Second Series.
S. K. Chakravarti. A study of Ancient Indian and Numismatics.
Whitehead. Notes on Indo-Greek Numismatics (Numismatic Chronicle, 1923).

I.—Archæology.

(B)

Papers V and VI.—Fine Arts and Iconography.

Fine Arts.

Coomaraswamy. History of Indian and Indonesian Art.
Rene Grousset. The Civilisations of the East, Volumes I and II.
P. Brown Indian Painting.
Kramrisch. Indian Sculpture.

Iconography

Grünwedel. Buddhist Art in India.
Foucher. The Beginnings of Buddhist Art.
Gopinath Rao. Elements of Hindu Iconography.
B. T. Bhattacharyya. Indian Buddhist Iconography.
J. N. Banerjee. Pratimā Lakshmaṇam
N. R. Ray. Brahmanical Gods in Burma.

For reference—

Rothenstein and Codrington. Ancient India.
R. D. Banerjee. History of Orissa, Volume II.
Kramrisch. Pala and Sena Sculptures.
Coomaraswamy. Dance of Siva and other Essays.
V. A. Smith. A History of Fine Art in India and Ceylon (2nd edition).
Stein. Innermost Asia.
Marshall. Mahenjo-daro.
Nag. Greater India.
O. C. Gangooly. South Indian Bronzes.
Kramrisch. Vishnudharmottaram.
Influence of Indian Art (India Society).
N. K. Bhattasali, Iconography of Buddhist and Brahmanical Sculptures in the Dacca Museum.
Rean. Dictionaire d'art et d' archiologie.
Springer. Kunstgeschichte.
Strzygowsky. Asiens Bildende Kunst (1928).
Foucher. On the Iconography of the Nativity of Buddha (Memoir of the Archaeological Survey of India, No 46).
A. K. Coomaraswamy. Early Indian Iconography (Eastern Art, Volume I).
B. M. Barua. Buddha Gaya, Volume II.
B. M. Barua, Barhut, Books I and II.

Papers VII and VIII.—Ancient Architecture.

Fergusson. History of Indian and Eastern Architecture, Volumes I and II.
G. Gouvean—Dubreuil. Architecture of Southern India.

For reference—

M. M. Ganguli. Orissa and Her Remains.
Havell. Ancient and mediaeval Architecture of India.
P. K. Acharyya. Dictionary of Hindu Architecture.
P. K. Acharyya, Mānasāra.
Banister and Fletcher. Glossary of Architectural Terms.
Longhurst. Pallava Architecture.
N. C. Bose. Canons of Orissan Architecture.

II.—Social and Constitutional History.

Paper V.—Social life including Manners, Customs and Ceremonies.

A. C. Das. Rigvedic Culture.
Cambridge History of India, Volume I, Chapters dealing with Social History.
Manu. Institutes.
Fick. The Social Osganisation in North-East India in Buddha's Time. (translated by S. Maitra).
Barnett. The Antiquities of India.
H. C. Chakladar. Studies in the Kāma Sūtra of Vātsyāyana.
Rhys Davids. Buddhists India (Chapters IV and X).
Imperial Gazetteer (Indian Empire), Volume I, Chapter VI.
B. C. Sen. Studies in Buddhist Jātakas (Journal of the Department of Letters, Volume XX).
H. C. Ray. Position of Brahmanas in Kautilya (Proceedings of the Second Oriental Conference).
Kauṭilya's Arthaśāstra, Book III, Chapters 2, 3 and 13.

For reference—

Zimmer. Altindisches Leben.
Macdonell and Keith. Vedic Index.
Dharmasūtras of Gautama Apāstamba, Baudhāyana and Vaśishṭha.
Grihyasūtras of Gobhila, Āpastamba, śāṅkhāyana, Āsvalāyana, Pāraskara Khādira.
Al-Biruni. India (omitting the mathematical details), translated by Sachau.
Watters. On Yuan-Chwang, Chapter V.
Dr. N. K. Dutt. Caste in Ancient India.
Senart. Caste in India (translated by D. Ross).

Paper VI.—Economic Life.

Cambridge History of India, Volume I, Chapter VIII.
N. C. Banerjee. Economic Life and Progress in Ancient India (Volume 1).
Rhys Davids. Buddhist India.
Schoff. Periplus of the Erythraen Sea.
Kautilya's Arthaśāstra. Book II. Chapters 12-17, 19, 23 and 24. Book III, Chapters 13 and 14. Book IV, Chapters 1 and 2. Book VII, Chapters 11 and 12.
H. C. Ray. Economic Policy and Functions of the Kautilyan State
Ghosal. Agrarian System in Ancient India.

For reference—

G. N. Banerjee. India as known to the Ancient World.
Kennedy. Early Commerce of India with Babylon (*J. R. A. S.*, 1898).
Hopkins. India Old and New (Chaptess dealing with Economic topics).
R. C. Majumdar. Corporate Life in Ancient India, Chapter I.

Paper VII.—Administration.

Kautilya. Arthaśāstra.
Mahābhārata. Śāntiparva. Sections 56-157.
N. C. Banerjee. Development of Hindu Polity and Political Theories.
N. C. Banerjee. Kauṭilya, Volume I.
Megasthenes. Indica (Portions dealing with administration).
S. K. Aiyangar. Ancient India, Chapter VI.
Ghosal. Hindu Revenue System.
D. R. Bhandarkar. Some Aspects of Hindu Polity (Nandi Lectures—Hindu University)

For reference—

Rangaswami Aiyangar. Ancient India Polity.
P. N. Banerjea. Public Administration in Ancient India.
R. C. Majumdar. Corporate Life in Ancient India.
Ghosal. Hindu Political Theories.
R. K. Mookerji. Local Government in Ancient India.
Sarkar. Political Institutions and Theories of the Hindus.
Jayaswal. Hindu Polity.
N. Law. Aspects of Ancient Indian Polity.
D. R. Bhandarkar. Carmichael Lectures, First Series (1918).

Paper VIII.—Ethnology (with special reference to India).

Haddon. Races of Man.
Risley. The Peoples of India.
Chanda. The Indo-Aryan Races (Chapters I and II).
D. R. Bhandarkar. Foreign Elements in the Hindu Population. (Indian Antiquary, 1911, pages 7-37).
J. H. Hutton. Census of India 1931, Volume I, Part I, Chapter XII, Caste, Tribe and Race.
C. W. Wissler. Introduction to Social Anthropology.

For reference—

Cambridge History of India, Chapters I, II, XXIV and XXV.
E. Pittard. Race and History.
Guiffrida Ruggeri. Systematic Anthropology of Asia (Translated by H. C. Chakladar).
P. Mitra. Pre-historic India (2nd Edition).
V. Gordon Childe. The Aryans.
Buxton. Peoples of Asia.

III.—Religious History.

(General).

Eliot. Hinduism and Buddhism.

For reference—

Barua. A History of Pre-Buddhistic Indian Philosophy.
Hopkins. Ethics of India.
Barth. Religions of India.
Gupta. Hindu Holidays and Ceremonies.
Hopkins. Religions of India.

Paper V—Vedic Religion.

Keith. Religion and Philosophy of the Vedas and Upanishads. Volumes I and II.
Das. Rig-Vedic Culture.

For reference—

Macdonell. Vedic Mythology.
Hillebrandt. Ritual Litteratur, Chapters I, III and IV.
P. S. De-mukh. The Origin and Development of Religion in Vedic Literature.

Paper VI.—Epic and Puranic Religion.

R. G. Bhandarkar. Vaisnavism, Saivism, and Minor Religious Systems (omitting XVI-XXV of Part I).
Hopkins. Epic Mythology (Chapters relating to the Devas).
H. C. Raychaudhuri. Early History of the Vaishnava Sect.
Carpenter. Theism in Mediaeval India.

For reference—

Hirananda Shastri. Origin and Cult of Tara.
Chanda. (Memoir of A. S. I.) Archaeology and Vaisnava Tradition.
Farquhar. An Outline of the Religious Literature of India.
Dowson. A classical Dictionary of Hindu Mythology.
Kingsbury and Phillips Hymns of the Tamil Saivite Saints.
Radhakrishnan. Indian Philosophy, Volume II (Chapter X). The Saiva, the Sakta and the Later Vaisnava Theism.
Gopinath Rao. Hindu Iconography, Volume 2 (Introduction only).
Barnett. Hindu Gods and Heroes.
Schrader. Introduction to the Pañcharatra and Ahirbudhnya Samhitā.
Woodroffe. Sakti and Sākta.
Garbe. Introduction to the Bhagavad Gītā (Tr. by Udgikar).
W. D. P. Hill. The Bhagavad Gītā.

Paper VII.—Buddhism.

Kern. Manual of Buddhism.
Dutt. Aspects of Mahāyāna Buddhism.
Dutt. Early History of the Spread of Buddhism and the Buddhist Schools.
E. J. Thomas. The Life of Buddha.
E. J. Thomas. The History of Buddhist Thought.

For reference—

Oldenberg. Buddha.
Mrs. Rhys Davids. Buddhism.
Spence Hardy. Manual of Indian Buddhism.
Warren. Buddhism in translations.
Suzuki. Outlines of Mahayanism.
Poussin. Buddhism.
I-tsing. Records of the Buddhist Religions (Takakusu).
Winternitz. History of Indian Literature, Volume II.
Kimura. Historical Study of the terms Mahāyāna and Hinayāna and Origin of Mahāyāna.

Paper VIII.—Jainism.

Jacobi. Introduction and Translation of the Jaina Sutras, Parts I and II (Sacred Books of the East, Volumes, XXII, XLV).

R. G. Bhandarkar. Report on the Search for Sanskrit Manuscripts in the Bombay Presidency during the year 1883-84, pages 91-157.

Buhler. On the Indian Sect of Jainas translated and edited with an outline of Jaina Mythology by Burgess.

Barua. The Ajivikas.

Chimanlal Shah. Jainism in North India.

Vijayyananda Suri. Sri Jainatattvadarsa.

For reference—

Bib. Indica Series. Uvasagadasao.

IV.—Indian Astronomy and Mathematics.

Paper V.—Mathematics.

Selected texts on Mathematics for critical, historical and comparative study—Sulva Suras.

Thibaut. On the Sulva Sutras (J A. S. B., Volume 44). The Pandit, Volumes 9 and 10 (Old Series), Volume I and 4 (New Series).

A. Burk. Das Apastamba Śulva Sūtra (Z. D. M. G., Volumes 55 and 56).

Lilāvati and Vijaganita. Bhāskara Edited by Pandit Sudhakar Dvivedi (Translated by Colebrooke).

Paper VI.—Mathematics.

History of Mathematics, with special reference to the words of Aryyabhata I, Varaha Mihira, Brahmagupta, Mahavira, Sridhara and Bhaskaracharya.

The following books are recommended—

Āryyabhaṭiyam, Gaṇita—Translated by Mr. P. C. Sengupta (Journal of the Department of Letters, Volume XVI).

Brāhmasphuṭa-Siddhānta. Chapters XVI and XVIII. Edited by Pandit Sudhakara Dvivedi.

Lilavatī and Bijaganita. Edited by Pandit Sudhakara Dvivedi (Translated by Colebrooke), or edited by Pandit Radhaballabh Jyotishtirtha, or edited by H. C. Banerjee.

Bakshali Mathematics. B. B. Dutt (B. C. M. S. Volume XXII, No. 1).

Mahavīra's Gaṇita Sara Saṁgraha. Edited by Rangacharya (Madras).

Colebrooke. Translation of the Lilavati and Bijaganita and the Chapters on Mathematics in the Brāhmasphuṭasiddhānta.

Smith, D. E. Hindu Arabic Numerals.

P. C. Sen Gupta. Infinitesimal Calculus in Indian Mathematics, Journal of Letters, Volume 22.

Brahma Gupta. On Interpolation—Bulletin of the Calcutta Mathematical Society, Volume 23, N. B.

Walter Eugene Clark. Hindu Arabic Numerals. (Journal of the School of Oriental Studies, London—Indian Studies in honour of Lanmann).

Paper VII.—Astronomy.

Selected text on Astronomy for critical, historical and comparative study. Sūryya Siddhānta.

Editions and Translations recommended—

Sūrya Siddhānta. With Ranganath's Commentary.

Sūryya Siddhānta. Translated by Burgess and Whitney (Calcutta Univ. Reprint).

Paper VIII.—Astronomy.

History of Astronomy with special reference to Jyotisha-Vedāṅga, Jain Astronomy, the (Modern) Sūryya Siddhanta, and to the works of Aryyābhata, I, Varahamihira, Brahmagupta, Muñjāla and Bhāskarachāryya.

The following books are recommended -

P. C. Sen Gupta. Papers on Hindu Mathematics and Astronomy, Calcutta, 1916.

Yajusa Jyotisham By Pandit Sudhakara Dvivedi.

Thibaut. Contribution to the Study of the Jyotisha-Vedanga (J. A. S. B., 1877).

On the Sūryyaprajnapati (J. A. S. B., 1880).

Aryabhaṭīyam- Translated by Mr. P. C Sen Gupta.

Pañcha-Siddhāntika- Translated by Dr. Thibaut and Pandit Sudhakara Dvivedi.

Aryabhata, the Father of Indian Epicylic Astronomy, by P. C. Sen Gupta.

Brahmasphuta-Siddhanta Edited by Pandit Sudhakara Dvivedi.

Siddhanta Siromani of Bhaskara Edited by Pandit Bapudev Shastri. Translation by Pandit Bapudev Shastri and Wilkinson.

Khandakhadya Karana of Brahmagupta- Edited by Pandit Babua Misra Translated by P. C. Sen Gupta, Calcutta University Press.

P. C Sen Gupta "Greek and Hindu Methods in Spherical Astronomy" Jounral of the Departmental of Letters (Calcutta University, Volume XXI).

For reference—

Bentley. Hindu Astronomy.

Bronand. Hindu Astronomy.

Playfair. (1) On the Astronomy of the Brahmins. (2) On the Trigonometry of the Brahmans (Collected Works, Volume III)

Whitney Oriental and Linguistic Studies (Series II, 1875).

The Twelfth Essay The Lunar Zodiac, on the views of Biot and Weber, respecting the relations of the Hindu and Chinese systems of asterisms with an addition on Muller's views, etc.

Max Muller. On Ancient Hindu Astronomy and Chronology (Preface to Rig-Veda, Volume IV)

Tilak. The Orion.

Tilak The Arctic Home of the Vedas.

Davis, S. On Hindu Astronomy (As. Res., Volume II).

V. Anthropology.

Paper V.

Physical Anthropology, including Origin and Antiquity of Man—

Haddon. Races of Man.

Giuffrida Ruggeri. Systematic Anthropology of Asia (Translated by Chakladar).

Chanda. The Indo Aryan Races.

For reference

Boule. Fossil Men.

Dixon. Racial History of Man.

Buxton. Peoples of Asia.

Pittard. Race and History.

Paper VI.

Social Anthropology—

Lowie. Primitive Society.

Lowie. Primitive Religion.

Wissler. Introduction to Social Anthropology.

For reference—

Goldweiweisser. Early Civilisation.

Paper VII.

Pre-historic Archaeology and Technology -

Morgan. Pre-historic Man.

Kroebar. Anthropology.

Mitra. Pre-historic India.

For reference -

Torres Straits Expedition—Arts and Crafts, Volume IV.

Kroebar. Anthropology.

Paper VIII.

Indian Ethnography, with special references to Bengal and Assam.
L. K. A. Iyer. Lectures on Ethnography.
Risley. The Peoples of India.
S. C. Ray. The Birhors.

For reference--

Census of India, 1911 and 1921—Chapter on Caste and Occupation.
Generalised accounts of the Tribes and Castes of the Bengal Presidency from Risley's Tribes and Castes of Bengal, Ethnographical Glossary of the Tribes and Castes of Assam.

Note.—Candidates are recommended to use the following as a preliminary course—

Duckworth. Pre-historic Man.
Haddon. Wandering of Peoples. History of Anthropology.
Taylor. Anthropology.

Economics.

For Groups A and B.

Paper I.—General Principles of Economics.

A. Marshall. Principles of Economics.
Taussig. Principles of Economics.
Pigou. Economics of Welfare.

For reference—

Keynes. Treatise on Money, Volumes I and II.
Wicksell. Lectures on Political Economy ; Volumes I and II.
Marshall Industry and Trade.
Ghosh, P. C. Theory of Profits.

Paper II.—General Principles of Political Scienc .

Oppenheimer. State.
Laski. Grammar of Politics.
Hobhouse. Social Evolution and Political Theory.

For reference—

Bryce. Modern Democracies.
Merriam, Barnes and others. A History of Political Theories—(Recent Times).

Paper III.—Public Administration including Administration in India.

Munro. Governments of Europe (England, France, Germany and Switzerland).
Government of India Act, 1935.
J. P. C. Report, Volume I, Part I.
Keith. Constitutional Law of the British Dominions.

For reference—

Willoughby. Principles of Public Administration.
Ogg. European Government and Politics.
Ramsay Muir. How Britain is Governed.
Finer. Theory and Practice of Modern Government.
Report of the All Parties Conference, 1928.
Reports of the Imperial Conference, 1926 and 1930.
Simon Commission Report, Volume 1.
Keith. Governments of the British Empire.

Paper IV.—Public Finance including Indian Finance

Pigou. Studies in Public Finance.
Plehn. Public Finance.
Stamp. Fundamental Principles of Taxation.
Hilton-Young. The System of National Finance.
Banerjea, P. N. Provincial Finance.
Banerjea, P. N. History of Indian Taxation.
Niyogi, J. P. Evolution of the Indian Income Tax.
Wattal. Financial Administration in British India.
Report of the Taxation Enquiry Committee, 1925-26.

For reference

Colwyn Committee's Report on National Debt and Taxation.
Banerjea, P. N. Indian Finance in the Days of the Company
Seligman ' Essays in Taxation.
Latest Budgets of the Government of India and Government of Bengal.
Buck. The budget in Governments of to day.

Paper V.

Indian Economics with a special study of the following problems.

(1) Co-operation.

Calvert. Law and Principles of Co-operation.
Correspondence respecting Agricultural Banks in India, 1887.
Nicholson's Report on the Introduction of Land and Agricultural Banks, Volume I.
Report of the Maclagan Committee on Co-operation
Strickland. Studies in European Co operation.
Hough. Co-operative Movement in India.
Cahill. Report on Agricultural Credit and Agricultural Co operation in Germany (cd. 6626 of 1912).
Wolff People's Banks.
Report on Agricultural Credit by the Ministry of Agriculture and Fisheries (1927), Economic Series No 8.
Report of the Bengal Provincial Banking Enquiry Committee, Chapter XI.
Annual Provincial Reports on the Working of Co operative Societies (Recent issues).
Report of the Central Banking Enquiry Committee (portions relating to Co operation and Rural Finance).
Report of the Agriculture Commission (portions relating to Co-operation and Rural Finance)

(2) Industrial Development.

Gadgil. Industrial Evolution in India. New edition.
Vera Anstey. Economic Development of India
Report of the Indian Industrial Commission
Clow. Factory Legislation in India.
Report of the Royal Commission on Indian Labour
Clow. State and Industry

Bulletins of the Department of Industries :

No. 31. Women's Labour in Bengal Industries- D. F. Curjel.
Tariff Board Reports on Steel, Cotton Textile Paper and Sugar Industries.
Hardy Report on Cotton Piece Goods Trade.
R M Chaudhuri. The Evolution of Indian Industries

Group A.

Paper VI - History of Economic Thought with an Outline of Economic History since the Industrial Revolution

Haney History of Economic Thought
Gide and Rist A History of Economic Doctrines.
Fay Great Britain from Adam Smith to Philip Snowden.
Cunningham. Growth of English Industry and Commerce. Modern Times, Part II (Laissez faire).

For reference—

List. National System of Political Economy.
Ricardo. Political Economy (Selections, Economic Classics Series).
Cannan. Review of Economic Theory.
Loria. Karl Marx
Horman. Contemporary Economic Thought.

Papers VII and VIII.

(*i*) *The History, Theory and Present System of Banking and Currency.*

Keynes. Treatise on Money, Volumes I and II.
Fraser Great Britain and the Gold Standard.
Edie. Money, Bank Credit and Prices.
Kisch and Elkin. Central Banks
Dunbar. History and Theory of Banking.
Rau. Present-Day Banking in India.
Reports of the Commissions and Committees on Indian Currency.
Coyajee. Indian Monetary System.
Wicksell Lectures on Political Economy, Volume II.

For reference—

Gregory. The Gold Standard and its Future.
Fisher. Purchasing Power of Money.
Sinha. Early European Banking in India
Indian Reserve Bank Act, 1934.
Report of the Controller of Currency (latest issue).
Goldenweiser. The Federal Reserve System in Operation.
Willis and Beckhart. Foreign Banking Systems.
Macmillan Committee's Report.
Hawtrey. The Art of Central Banking.
Keynes. The General Theory of Employment, Interest and Money.
B. B Dasgupta Paper Currency in India.
Report of the Central Banking Enquiry Committee.
Report of the Bengal Banking Enquiry Committee.
Future of Monetary Policy (Royal Institute of International Affair).

(*ii*) *History, Theory and Present Organisation of International Trade.*

Chapters bearing on the subject in Ricardo, Mill and Cairness
Pigou. Protective and Preferential Import Duties.
Viner. Dumping : Problem in International Trade.
P. Ashley. Modern Tariff History.
Harrod. International Economics.
Taussig. Some Aspect of the Tariff Questions.
Taussig. International Trade.
Clare and Crump. A. B. C. of Foreign Exchange.
Banerjea, P. N. Fiscal Policy in India.
Coyajee. Indian Fiscal Problem.
Report of the Indian Fiscal Commission.
Beveridge and others. Tariffs.

For reference—

H. L. De. Indian Tariff Problem.
Report of Indian Fiscal Commission.
Review of the Trade India.
Reports of Tariff Board on Steel , Cotton and Sugar.
Ainscough Report on British Indian Trade (latest issue).
Parimal Ray. India's Foreign Trade since 1870.
Ohlin. Interregional and International Trade.

(*iii*) *The Theory and Practice of Statistics including Demography*

A L. Bowley. Elements of Statistics (New edition).
Jones. First Course in Statistics.
Bowley. Measurement of Social Phenomena.
Yule. Introduction to Statistics.
Newsholme. Vital Statistics.
Mills Statistical Method applied to Economics and Business.
Census Report, 1931 (India and Bengal).

The Jubilee Volume of the Journal of the Royal Statistical Society.
British and Foreign Trade and Industries, being Memoranda, etc., prepared by the Board of Trade (commonly called the Fiscal Blue Books).
Imperial Gazetteer, Volume I, Chapters IX and X.

For reference

Mayo Smith. Statistics and Economics.
Stamp. British Incomes and Property.
Statistical Abstract for British India.

(iv) Analytical and Mathematical Economics.

Cunnynghame. Geometrical Political Economy.
Cournot. Mathematical Principles of the Theory of Wealth (Economic Classics Series).
Jevons Theory of Political Economy.
Pantaleoni. Pure Economics
Marshall. Principles of Economics (Mathematical Appendices)
Pigou. Economics of Welfare.
Edgeworth. Papers relating to Political Economy, Sections I, IV and VI.
Wicksteed Alphabet of Economic Science.
Wicksteed. Common Sense of Political Economy
Articles by Flux, Pigou and Edgeworth in the "Economic Journal" bearing on Mathematical Economics

For reference –

Bowley. Mathematical Groundwork of Economics.

(v) Modern Economic Development

Ogg and Sharp Economic Development of Modern Europe
Moulton. Japan.
Dutt, R. C. India under Early British Rule.
Knowles. Economic Development of the British Overseas Empire.
Clapham. Economic Development of France and Germany.
Results of State Trade. Published by the International Co-operative Alliance
R. M. Chaudhuri. The Evolution of Indian Industries.

For reference –

H. Levy. Monopolies, Cartels and Trusts in British Industry.
Liefmann International Cartels and Trusts.
Orchard. Economic Position of Modern Japan
Sir Arthur Salter. Recovery.
Parimal Ray. India's Foreign Trade, since 1870.
World Economic Survey (L. O. N.).
World Agriculture (Royal Institute of Agriculture).

Group B.

Paper VI.

History of Political Thought.

Plato. Republic.
Aristotle. Politics.
Rousseau. Social Contract.
Dunning. History of Political Theories. Three Volumes.
Ivor Brown. English Political Theory.
Merriam, Barnes and others. A History of Political Theories; Recent Times.
Coker. Recent Political Thought.

For reference–

Machiavelli. The Prince.
Hobbes. Leviathan.
Locke. Second Treatise on Government.
Willoughby. Political Theories of the Ancient World.
Green. Lectures on the Principles of Political Obligation.
Watson. The State in War and Peace.
Engelmann. Political Philosophy from Plato to Bentham.

Papers VII and VIII.

(i) *Comparative Study of Political Institutions.*

Greenidge. Greek Constitution.
Greenidge. Roman Public Life.
Maine. Ancient Law (Selected Chapters).
Banerjea, P. N. Public Administration in Ancient India.
Ghoshal. Hindu Political Theories.
Sarkar, B. K. Political Institutions and Theories of the Hindus.
Sidgwick. Development of European Polity.
Ogg. Governments of Europe (1934).
Bryce. Modern Democracies (Selected Chapters).

For reference—

Kautilya. Arthasastra.
Glotz. Greek Cities.
Homo. Roman Political Institutions.
Merriott. The Mechanism of the Modern State.
Select Constitutions of the World (Dail Eireann Publication).
Coulanges. Ancient City (Tr. Small).
Headlam Morley. The New Democratic Constitutions of Europe.
Woodrow Wilson. Congressional Government.
Brell. New Governments of Europe.

(ii) *Sociology—Theoretical and Applied.*

Lichtenberger. Development of Social Theory, 1924.
Giddings. Principles of Sociology.
Fairchild. Applied Sociology.
Risley. Peoples of India.
Mookerjee, Bhudev. Samajik Prabandha.
Rivers. Social Organisation.
Census Reports for India, 1911, 1921 and 1931 (Health and Vital Statistics).
Census Reports for Bengal, 1931 (Health and Vital Statistics).
Morris Ginsborg. The Psychology of Society.
Bernard. Methods and Fields of Sociology.

For reference—

Frazer. Golden Bough (Abridged Edition).
Graham Wallas. Our Social Heritage.
Gustave Le Bon. The Psychology of Revolution.
J. B. Bury. Idea of Progress.
Parmalee. Criminology.
Dewey. Human Nature and Conduct.
Wundt. Folk Psychology.
Popenoe and Johnson. Applied Eugenics.
Sorokin. Contemporary Sociological Theory.

(iii) *Public International Law.*

Oppenheim. International Law.
Hall. International Law.
Pitt Cobbet. Cases on International Law, Two Volumes (new edition).
Howard Ellis. The Origin, Structure and Working of the League of Nations.
Buell. International Relations.
Brierly. Law of Nations.
Lanterpacht. The Function of Law in International Community.

For reference—

Higgins. The Hague Peace Conference.
The League Year Book.
The British Year Book of International Law.
Transactions of the Grotious Society (Problems of Peace and War), First published in 1915.
History of the Peace Conference at Paris, edited by A. W. V. Temperly, 5 Volumes, 1920-21.

Garner. International Law and the World War. Two Volumes, 1921.
Felix Morley. The Society of Nations.
Pollock. League of Nations.
Spaight. Air Power and War Rights.
Sir Eric Drummond. Ten years of World Co-operation (League of Nations).
Garner. Prize Law during the World War.
Problems of Peace (Lectures delivered at the Geneva Institute of International Relations).

(iv) Constitutional and Administrative Law.

Port. Administrative Law.
Goodnow. Comparative Administrative Law.
Keith. Constitution, Administration and Laws of the British Empire.
Willoughby. Fundamental Concepts of Public Law.
Asquith and Chalmers. Constitutional Law of England.
Keith. Constitutional Law of the British Dominions.
Keith. Introduction to British Constitutional Law.

For reference—

Thomas. Leading Cases in Constitutional Law (new edition).
Ghosh, N. N. "Comparative Administrative Law (Tagore Law Lectures, 1918)."

Commerce.

Compulsory Papers.

Paper I.—Realistic Economics.

Marshall. Industry and Trade.
P. B. Whale. International Trade.
Edie. Money, Bank Credit and Prices.

For reference—

Mitchell. Business Cycles.
Lavington. The English Capital Market.

Paper II.—Accounting.

Batliboi, J. R. Advanced Accounts.
Carter. Advanced Accounts.
Hawkins. Cost Accounts.
Indian Income-Tax Manual.

Paper III.—Commercial Law.

Stevens. Mercantile Law.
Schaub and Issacs. Law in Business Problems (Macmillan,.
Davar. Indian Mercantile Law.
Sengupta, Dr. Nareschandra. Company Law.
Sen and Banerjee. Principles of Indian Mercantile Law.

Paper IV—Banking

Agger. Organised Banking.
Rau. Present-day Banking.
Sheldon. Practice and Law of Banking.
Spalding. Foreign Exchange and Foreign Bills in Theory and Practice.

For reference—

Kisch and Elkin Central Banks (Latest edition)
Burgess. Reserve Banks and the Money Market.
Willis and Beckhart. Foreign Banking Systems.
Report of the Central Banking Enquiry Committee.

Optional Papers.

Papers V to VIII.

Any four of the following:—

(*i*) *Industrial Structure and Development.*

Marshall. Industry and Trade.
Lifemann. International Cartels and Trusts.
Clapham. Economic Development of France and Germany, 1815-1915.
Special Study of Cotton, Jute, Steel, Coal, Sugar and Tea Industries in India.
Report of the Royal Commission on Labour.
R. M. Chaudhuri. The Evolution of Indian Industries.

For reference—

Reports of the Tariff Board on Steel, Sugar and Cotton Textile Industries.
Report of the Macmillan Committee.
Report of the Industrial Commission (1916-18).

(*ii*) *Statistics.*

Secrist. Readings and Problems in Statistical Method.
Bowley. Elements of Statistics, Part I.
Mills. Statistical Methods applied to Economics and Business.
Rhodes. Elementary Statistical Methods.

(*iii*) *Economic Geography.*

Chisholm. Handbook of Commercial Georgraphy.
Chambers of Commerce Atlas.
Russell Smith. Industrial and Commercial Geography.
Rodwell Jones. Economics Geography.

(*iv*) *Tariffs.*

Bastable and Gregory. Commerce of Nations.
Coyajee. Indian Fiscal Policy.
Banerjea, P. N. Indian Fiscal Problem.
Gregory. Tariffs: A Study in Method.
Report of the Indian Fiscal Commission, 1922.
The Indian Tariff Act. The Indian Sea Customs Act.
Report of the Indian Tariff Board regarding the grant of Protection to the Steel, Cotton, Paper and Sugar Industries.
Beveridge. Tariffs.
H. L. Dey. Indian Tariff Problem in relation to Trade and Taxation.

(*v*) *Agricultural Economics.*

Leake. The Bases of Agricultural Practice and Economics in the United Provinces of India.
Ray. Agricultural Indebtedness.
Study of Indian Village by Mann, Keatinge, Jack, etc.
Nourse. Agricultural Economics.
Taylor. Agricultural Economics (Ed. 1920).
Carver. Principles of Agricultural Economics.
Wolff. Rural Reconstruction.
Hough. Co-operative Movement in India.
Report of the Agricultural Commission (Abridged).
Venn. Agricultural Economics.
N. C. Chaudhuri. Jute and its Substitutes.
World Agriculture. (Royal Institute of Agriculture.)

(*vi*) *Currency.*

Edie. Money, Bank Credit and Prices.
Report on the Operations of the Currency Department of the Government of India (latest issue).
Reports of the Currency Commissions and Committees.
Coyajee. Indian Currency System.
Gregory. The Future of the Gold Standard.
Thomas. Principles and Arithmetic of the Foreign Exchange.

For reference—

The Future of Monetary Policy (Royal Institute of International Affairs).
Fisher. Stable Money.

(vii) Public Finance.

Wattal. Financial Administration in India.
Hilton Young. System of National Finance.
Report of the Taxation Enquiry Committee.
Stamp. Fundamental Principles of Taxation.
Plehn. Public Finance.
P. N. Banerjea. History of Indian Taxation.
J. P. Nyogi. Evolution of the Indian Income Tax.
P. N. Banerjea. Provincial Finance in India.

For reference–

Shirras. Science of Public Finance.
Colwyn Committee's Report.
Latest Budgets of the Government of India and the Government of Bengal.

(viii) Auditing.

Specicer and Peglar. Practical Auditing.
Dicksee. Practical Auditing.
J. R. Batliboi. Lectures on Auditing.

(ix) Business Organisation.

Chartered Institute of Secretaries Secretarial Practice.
Bloomfield. Business Organisation.
Sparling. Introduction to Business Organisation.
Haney. Business Organisation and Combination.
Stephenson. Principles and Practice of Commerce.

(x) Transport.

Dagget. Principles of Inland Transportation.
Ripley, W. Z. Railroads Rates Regulations.
Srinivasan. K. C. Law and Theory of Railway Rates.
*S. C. Ghosh Freight yards, Terminals, Train and Freight, Traffic Operation.
Ripley. Railroad Organisation and Finance
*Sanyal, N. Development of Indian Railways.
Major Buddon. Operating statistics and the Divisional Officer.
Haji. Economics of Shipping.
Johnson and Hubner. Principles of Ocean Transportation.
Sherrington. Economics of Railroad Transport in Great Britain, (Volume II.)

For reference -

Kirkness Mitchell Report.
Report on the Administration of Indian Railways (latest issue)

(xi) Economic History.

Ogg and Sharp Economic Development in Europe.
Knowles. Economic Development of the Overseas Empire– 1763 1914.
Cambridge Modern History, Volume VIII, Chapter XXII.
I. J. Bryan. Japan from Within.
Report of the Indian Industrial Commission.
Birnie. Economic History of Europe.
R. M. Chaudhuri Evolution of Indian Industry.

For reference

R. C. Dutt. India under Early British Rule.
R. C. Dutt. India in the Victorian Age.
Imperial Gazetteer, Volume III.
H. G. Moulton. Japan.

Anthropology.

Text-books.

M.A. and M.Sc. EXAMINATIONS, 1938.

Paper I.

(*Comparative Anatomy of the Primates Human Placontology. Evolution.*)

Man's place amongst the Mammals—Classification and characteristics of the Primates. Comparative osteology of the Anthropoidae and Hominidae. Fossil Primates—Adapis, Anaptomorphus, Parapithecus, Mesopithecus, Propliopithecus, Pliopithecus, Dryopithecus, Sivapithecus and other Siwalik Anthropoids—Fossil men, Pithecanthropus, Sinanthropus, Heidelberg, Piltdown, Neanderthal type, Cro-Magnon, Chancelade, Grimaldi, Azilian races and Rhodesian man

History of biological thought in the 19th and 20th centuries.

Books recommended—

C. P. Stibbe. An Introduction to Physical Anthropology, London, 1930.
M Boule. Fossil Men (Translated by J. E and J Ritchie), Edinburgh and London, 1923.
A. Keith New Discoveries relating to the Antiquity of Man
F. Wood Jones. Man's place among the Mammals, London, 1929.

For reference

W. L. H. Duckworth. Morphology and Anthropology, Part I.
W. E. Le Gross Clerk. Our Early Forerunners, London, 1934.
R. S. Lull. Organic Evolution, New York, 1920.
R. Broom. The Origin of the Human Skeleton, London, 1930.

Paper II.

(*Racial Somatology. Anthropography. Racial Prehistory*).

Race-criteria and classification. Racial somatology, physiology and psychology. Race-mixture.

Racial migrations in Neolithic, Bronze and Early Iron ages in Europe and Asia.

History and distribution and characteristics of ethnic groups in Europe and India (considered in detail) and the rest of Asia, Africa, Oceania and America (considered in general).

Books recommended :—

E. Baur, E. Fischer, F. Lenz. Human Heredity (Chapters on Anthropography and Racial Psychology). (Translated by E. and C. Paul, London, 1931.)
A. C. Haddon. Races of Man, Cambridge, 1929.
H. F. K. Gunther. Racial Elements in European History, 1927.
H. Risley. Peoples of India, 1916.
Giuffrida-Ruggeri. The First Outlines of A Systematic Anthropology of Asia. (Translated by H. C. Chakladar, Calcutta, 1921.)

For reference :—

H. Weinert. Rassen der Menschen. Miinchen, 1935.
J. Denniker. Les Races et Les Peuples de la Terre , Paris, 1926.
G. Schwalbe and E Fischer. Anthropologie (In Kultu der Gegenwart, III), Berlin, 1923.
R. B. Dixon. Racial History of Man, New York, 1923.
W. Z. Ripley. Races of Europe, 1900.
R. Chanda. Indo-Aryan Races.
Census Report and Ethnographic Appendices, 1931.
B. N. Datta. Races of India (CU- J. D. L. Volume XXVI).
E F Von Eickstedt. Racial History of Mysore.
L. K. A. Iyer. The Mysore Tribes and Castes, Volume I, Mysore, 1935.
L. H Dudley Buxton. Peoples of Asia.
R. Martin. Lehrbuch der Anthropologie (Zweite Aufflage, 1928).

Paper III.

(*Primitive Society and Religion. Evolution of Culture including Prehistory*).

Origin and Development of Human Society. Marriage, kinship, social organisation, property and inheritance, rank, law and government.

Primitive religion Theories of its origin and development. Magic. Concept of Soul. Tree and animal worship. Supreme Being in primitive religion. Priesthood.

The Stone Age Culture of Europe, Africa and India. Chalcolithic Civilisations of India, Persia and Mesopotamia. Main Copper and Bronze Age Cultures and Movements in Europe. Megalithic remains in India and Europe. Interpretation of culture-phenomena and culture-processes.

Books recommended .

R. H. Lowie. Primitive Society.
R. H Lowie. Primitive Religion.
R. H. Lowie. An Introduction to Cultural Anthropology.
G. G. MacCurdy Human Origins.
V. G. Childe. New Light on the Most Ancient East.
Panchanan Mitra. Prehistoric India, Calcutta 1927.

For reference

C. Wissler. An Introduction to Social Anthropology.
W H. R. Rivers. Social Organisation.
E. Westermarck. A Short History of Human Marriage.
L. S B Leakey Stone Age Culture in Kenya Colony.
H. Breuil. Le Palæolithique en Chine.
Sir John Marshall. Mohenjodaro and the Indus Civilisations.
G. Montandon. Traites d' Ethnologie culturelle, Paris, 1934.
F. Graebner. Ethnologie. (Part III of Anthropologie).
O. Menghin. Der Mensch der Vorzeit.
B. Majumdar. Jivan-Bani.

Paper IV.

(GROUP A.)

(*Human Heredity and Racial Hygiene. Biometry.*)

General aspects of heredity and variation in man Sex linked inheritance in man. Inheritance of bodily traits Stature, eye color, hair, headform, proportions and shape, physiologic and physiognomic features Inheritance of abnormalities Inheritance of intellectual gifts Effects of inbreeding and racial-crossing. Eugenics. Biometry.

Books recommended -

R R. Gates. Heredity in Man, London, 1929
E. Baur, E. Fisscher, F Lenz. Human Heredity. (Translated by E. and C. Paul, London, 1931.)
L. C Dunn. Heredity and Variation.

Books recommended

C Davenport Heredity in relation to Eugenics
W. Bateson. Mendel's Principles of Heredity.
T. H. Morgan. Physical Basis of Heredity.
H H Newmann. Evolution, Genetics and Eugenics.
Davenport, W. Todd, etc. The Biology of the Individual.
E. B Wilson. The Cell in Development and Inheritance.
R Punnett. Mendelism.

GROUP B.

(*Advance Social Anthropology. Intensive study of some Primitive Tribes.*)

Economic and psychological factors in the development of society. Comparative study of matriarchal and patriarchal system with special reference to India and of the different types of kinship. Intensive study of the classificatory system, cross-cousin marriage, dual organisation, triclan grouping and polyandry in India. Contact of peoples as affecting social institutions.

A complete acquaintance with the material culture and social organisation and religious beliefs of one or more tribes prescribed from time to time by the Board.

Prescribed for 1938—Santals or Khasis.

Books recommended

B. Malinowski. Sex and Repression in Savage Society, London, 1927.
S Freud. Totem and Taboo.
W. H. R. Rivers. Kinship and Marriage in India (Man in India, 1921).
W. H. R. Rivers. Cross-cousin Marriage in India (J. Roy As. Soc., 1927, pages 623, sq.).
T. H. Hodson. Marriage of Cousins in India (Man in India, 1925).
K. P. Chattopadhyay. Contact of Peoples affecting marriage rules. (Proc. Ind. Sc. Congress, 1931).
G. S. Ghurye. Daul Organisation in India (J. R. A. I., 1923).
T. C. Das. Social Organisation of the Purum Kukis of Manipur (J. D. L., Volume XXVI).

For reference—

W. H. R. Rivers. History of Melanesian Society, 2 volumes.
Mrs. B. Z. Seligman. Incest and Descent, etc. J. R. A. I., 1924 and 1927, 1928 and 1929.
J. K. Bose. Dual Organisation in Assam (J. D. L., Volume XXV).
P. C. Biswas. Primitive Religion, Social Organisation, Law and Government amongst the Santals (J. D. L., Volume XXVI).
T. C. Raychaudhury. The Khasis (J. D. L., Volume XXVI).
P. Radin. Social Anthropology, New York and London, 1932.
L. K. Iyer. The Mysore Tribes and Castes, Volume I, Mysore, 1935.

GROUP C.

(Culture Analysis of higher elements in Indian Society and Religion Intensive study of some Castes).

Caste-origin, formation and function. Vital statistics. Marriage. Life cycle of the Individual. Social Organisation. Inheritance. Socio-religious rites and ceremonies.

Main outlines of principal religious systems of India.

A detailed study of some caste-groups.

Books recommended—

G S. Ghurye. Race and Caste in India.
H. Chakladar. Social Life in Ancient India, Calcutta, 1924.
N. Banerjea. Social Studies in Kautilya.
J. N. Farquhar. Religious Literature of India.
S. C. Roy. Caste, Race and Religion in India. (Man in India, 1934).

For reference—

Census Reports, 1931.
Carpenter. Theism in Mediaeval India.
R. G. Bhandarkar. Vaishnavism, Saivism, etc.
Akshoy K. Dutt. Bharatiya Upasak Sampraday.
Kern. Manual of Buddhism.
B. K. Sircar. Folk Element in Hindu Culture.
N. Bose. Spring Festival in India (Man in India, 1927).
S. V. Karandikar. Hindu Exogamy, Bombay, 1929.
P. C. Bagchi. Pre-Aryans and Pre-Dravidians in India.
N. K. Dutt. History of Caste.

Practical.

Paper V.—Human osteology. Primate osteology. Fossil men.

Paper VI.—Somatometry Osteometry, Statistical treatment of Anthropometric data.

Paper VII.—Prehistoric Archæology. Pleistocene Palæontology.

Paper VIII.—Technology. Museum Methods. Field work.
(Vide detailed syllabus).

S. N. MITRA, *Secretary (offg.)*.

Office of the Director of Public Instruction, Bengal.

NOTIFICATION

Calcutta, the 17th July 1936.

Junior Scholarship, 1936.

The following students are awarded the junior scholarships on the results of the Matriculation Examination of Calcutta University held in 1936. The scholarships take effect from 1st June 1936 for two years.

(Principals of Colleges are requested to report to the Director of Public Instruction, Bengal, the names of holders of scholarships as soon as they are admitted No scholarship can be drawn until this information is available with respect to every scholarship-holder) .—

Nine first grade scholarships of Rs. 20 a month each.

1	Amales Tripathi ..	Tamluk Hamilton High School, Midnapore.
2	Pratapchandra Chunder	Hindu School, Calcutta.
3	Mrityunjay Bandyopadhyay.	Bantra M. S. P. C H. E. School, Howrah.
4	Amiya Kumar Basu ..	Khulna Zilla School.
5	Sailendranath Ray ..	Puddopukur Institution, Calcutta.
6	Debabrata Rej ..	Ukhara Kunjabehari Institution, Burdwan.
7	Debkumar Chandra	Metropolitan Institution (Main), Calcutta.
8	Kedia Bahadur Prasad ..	Hare School, Calcutta.
9	Santinath Bhattacharyya	Scottish Church Collegiate School, Calcutta

Thirty-three second grade scholarships of Rs. 15 a month each.

Calcutta—6.

1	Nikhilendu Ray ..	Hindu School.
2	Ushanath Bandyopadhyay.	Mitra Institution (Main).
	Prabhatkumar Chakrabarti.	Bhowanipur Tirthapati Institution.
4	Syamsundar Ghosh ..	Chetla Boys' H. E. School.
5	Arunkumar Mitra ..	Scottish Church Collegiate School.
6	Arunkumar Mukhopadhyay.	Mitra Institution (Main).

Presidency Division—6.

1	Hirankumar Hajra ..	Basirhat H E School 24 Parganas
2	Prabodhchandra Mukhopadhyay.	Taki Government High School, 24-Parganas
3	Siddheswar Sahu	Majdia Railbazar H E School, Nadia.
4	Dibendranath Nath .	Basirhat H E School, 24-Parganas.
5	Palarchandra Mandal	Mojilpur J M. Training School 24-Parganas
6	Amarendranath Sen	Saidabad Hardinge H E. School, Murshidabad

Burdwan Division 6

1	Susilkumar Bandyopadhyay	Howrah Zilla School.
2	Nabakumar Mudi ..	Bankura Zilla School.
3	Kalidas Basu .	Kharagpur B N Railway Indian High School, Midnapore.
	Nikunjabihari Chaudhuri	Narajol Mahendra Academy, Midnapore.
	Pabitrakumar Dasgupta	Ghatal Vidyasagar H E. School, Midnapore.
6	Bipupendrakumar Mukhopadhyay.	Bankura Collegiate School

Dacca Division—5.

1	Taslimuddin Ahmad ..	Keora K. B. R. Rajmohan Institution, Bakarganj.
2	Sarojranjan Chakrabarti	Bajitpur H. E. School, Mymensingh.
3	Khagendrachandra Pal ..	Kishoreganj H. E. School, Mymensingh.
4	Bijaysankar Basak ..	Manikganj H. E. School, Dacca.
5	A. F. M. Abdul Karim ..	Perojpur Government High School, Bakarganj.

Chittagong Division—4.

1	Manilal Bandyopadhyay	Sarail Annada H. E. School, Tippera.
	Brajendrakumar Pal	Raozan Aryamaitreya Institution, Chittagong.
3	Manoranjan Chakrabarti	Sinhergaon Gobinda H. E. School, Tippera.
4	Hireschandra Sengupta	Brahmanbaria Annada H. E. School, Tippera.

Rajshahi Division—6.

1	Amalkrishna Gupta ..	Malda Zilla School.
2	Gurubandhu Chaudhuri	Ditto.
3	Ajitsankar Bhaduri .	Pabna Gopalchandra Institution.
4	Anilkumar Chakrabarti	Serajganj B. L. H. E. School, Pabna.
5	Amargopal Nandi .	Naogaon K. D. H. E. School, Rajshahi.
6	Bibhutibhushan Palchaudhuri.	Rajshahi Lokenath H. E. School.

Sixty-three third grade scholarships of Rs. 10 a month each.

Calcutta—12.

1	Birendrakrishna Ghosh, I	Town School.
2	Himansubhushan Dasgupta.	Kalighat High School.
3	Dhirendranath Maulik ..	Mitra Institution (Main).
	Sunilchandra Sengupta ..	Bharati Vidyalaya.
5	Pabitrakumar Raychaudhuri.	Mitra Institution (Main).
6	Prabhatkumar Hajra ..	Calcutta Brahmo Boys' H. E. School.
7	Brajamohan Sen ..	Saradacharan Aryan Institution.
	Arunkumar Ray ..	Bhowanipore Mitra Institution.
9	Dwipendranath Sen ..	Hare School.
	Biharilal Shrivastawa ..	Calcutta S. M. Vidyalaya.
11	Ganeshchandra Chaudhuri	Oriental Seminary.
	Bhupatinath Nandi ..	Mitra Institution (Main).

24-Parganas—3.

1	Prabhatkumar Bandyopadhyay.	Panihati Trannath H. E. School.
	Sukumar Mukhopadhyay	Baranagore Victoria H. E. School.
	Bijaykrishna Das ..	Fatehpur S. N. Institution.

Jessore—2.

1	Nandagopal Saha ..	Fulhari Institution.
2	Bhujangabhushan Bhattacharyya.	Gangarampur P. K. H. E. School.

Khulna—2.

1	Satischandra Khan ..	Dakshin Sripur H. E. School.
2	Arunkumar Sen ..	Khulna Zilla School.

Murshidabad—3.

1	Parbatisankar Sen ..	Nimtita G. D. Institution.
2	Raisuddin Ahmed ..	Murshidabad Nawab Bahadur's Institution.
3	Abanikumar Bandyopadhyay.	Panchthupi T. N. Institution.

Nadia—2.

1 Anilkumar Bandyopadhyay. Ranaghat P C H E School
2 Satyendranath Sarkar . Kustia Municipal Academy

Bankura—1

Dibakardas Mahanta . Bankura Collegiate School

Birbhum—1.

Kanailal Das Birbhum Zilla School.

Burdwan 3

1 Gadadhar Rakshit .. Burdwan Municipal High School.
2 Pranayendranath Sarkar Ukhara Kunjabehari Institution
3 Durgadas Basu .. Burdwan Town School.

Hooghly -2

1 Rajendrakumar Bandyopadhyay Jangipara D N H E. School.
Parbatinath Mukhopadhyay Somra D. C. H. E School.

Howrah 3.

1 Sudhirranjan Bandyopadhyay. Howrah Zilla School
2 Kalicharan Sinha .. Narit Nyayaratna Institution.
3 Sudhirendra Basu .. Baje-Shibpur B K Paul's Institution.

Midnapore— 2

1 Amulyacharan Maiti .. Ballichak Bhajahari Institution.
2 Ramkrishna Bandyopadhyay. Ghatal Vidyasagar H E. School.

Bakarganj- 3.

1 Mukundalal Gangopadhyay. Khalsakota H E. School
2 Nityaranjan Sengupta . Siddhakati J. P. Institution
3 Anadiranjan Ray .. Barisal Zilla School

Dacca - 2

1 Sudhir Kumar Pal .. Dhulla Bhuban Mohan H E School.
2 Sujitkumar Dasgupta .. Duptara Central Coronation School.

Faridpur 2.

1 Gobindalal Bandyopadhyay. Woolpur P C H E School.
2 Rameschandra Ray .. Charmugria Merchants' H E School

Mymensingh- 3

1 Binodbihari Saha .. Santosh Jahnavi H. E School.
2 Jyotirmay Guhathakurta Mymensingh Zilla School.
3 Hitendrakisor Ray .. Kishorganj H E School.

Chittagong 2

1 Jamal Ahmad .. Fatikcheri Coronation H. E School.
2 Mihirranjan Chattopadhyay. Cox's Bazar H E. School.

Noakhali 1.

Bhupatiranjan Mukhopadhyay. Dattapara R R H E School.

Tippera 3

1 Mirza Rashid Ahmad .. Comilla Zilla School.
2 Kshirodacharan Raychaudhuri. Nabinagar H E School.
Pabindralal Nag .. Comilla Zilla School

Chittagong Hill Tracts—1.

Sunilkrishna Sen .. Rangamati Government High School.

Bogra—1.

Tulsi Mall Agrawal .. Bogra Coronation Institution.

Darjeeling 1.

Manikumar Chettri .. Darjeeling Government High School.

Dinajpur- 1.

Nareschandra Chattopadhyay. Dinajpur Maharaja Girijanath High School.

Jalpaiguri—1.

Bibhutibhushan Nag .. Jalpaiguri Fanindra Deb Institution.

Malda—1.

Brahmadeo Sinha .. Nagharia H E. School.

Pabna 2.

1 Jagannath Gangopadhyay Serajganj B. L. H. E. School.
2 Santipada Bhaumik .. Ditto.

Rajshahi—1.

Md. Hasenazzaman .. Rajshahi Lokenath H. E. School.

Rangpur and Cooch Behar 2.

1 Amalranjan Majumdar .. Cooch Behar Jenkins School.
2 Prasantakumar Sengupta Lalmonirhat H E. School.

Special Scholarships for Girls.

Two of Rs 20 a month each

1 Anima Chakrabarti .. Santipur Municipal H. E School, Nadia.
2 Aruna Mitra .. Berhampur Girls' H E School, Murshidabad.

Five of Rs. 15 a month each

1 Nirupama Bandyopadhyay. Chittagong Dr Khastagir's H. E. School for Girls
2 Saktimayi Pal .. Victoria Institution, Calcutta.
3 Indrani Niyogi .. Mymensingh Radha Sundari School.
4 Sobha Gupta .. Kamala Girls' H E School, Calcutta
5 Asha Sircar .. St. Margaret's School, Calcutta

Ten of Rs 10 a month each

1 Nilima Datta .. Mymensingh Vidyamoyee High School for Girls.
2 Aparna Nagchaudhuri .. Brahmo Girls' School, Calcutta.
Rama Guha .. Narayanganj Morgan Girls' H. E School, Dacca.
4 Mrinalini Mukhopadhyay Midnapore Mission Girls' High School.
5 Pratima Raychaudhuri .. Lake School for Girls, Calcutta.
6 Mrinmayi Dasgupta .. Victoria Institution, Calcutta
7 Kripa Ghosh .. Ditto
8 Urmila Dasgupta .. Berhampur Girls' H. E. School, Murshidabad
9 Arati Chattopadhyay . Brahmo Girls' School, Calcutta.
10 Meher Tamar .. Dinajpur Sadar Girls' H. E School.

J M BOTTOMLEY,
Director of Public Instruction, Bengal.

Orders by the Executive Council of the University of Dacca, dated the 18th July 1936.

Ramna, Dacca, the 18th July 1936.

The Degree of Doctor of Philosophy has been conferred on Prakaschandra Lahiri for a thesis entitled "Concepts of RIti and Guna in Sanskrit Poetics in their Historical Development."

N. AHMAD, *Registrar.*

Orders by the Vice-Chancellor and Syndicate of the Calcutta University.

Senate House, the 23rd July 1936.

1. The undermentioned candidate at the Matriculation Examination, 1936, whose result was withheld from publication, as announced in the *Calcutta Gazette*, dated 18th June 1936, on page 1016, is hereby declared to have passed the examination :—

Roll No	Name.	Age.	Division.
Model Academy.			
Cal. 3235	Sitaram Jhunjhunwala ..	16	First.

2. The undermentioned candidate is declared to have passed the I.Sc. Examination, 1936, in Mathematics only :—

Nikhilranjan Chaki .. Non-collegiate student, Berhampore K. N. College.

B. B. DUTT,

Controller of Examinations.

Calcutta University.

Senate House, the 23rd July 1936.

In addition to the list of candidates declared to have passed the B.Sc. Examination, 1936, in the Pass Course published in the *Calcutta Gazette*, dated 18th June 1936, on page 1029, the undermentioned candidate is also declared to have passed :—

Nikhilranjan Chaki .. Berhampore K. N. College.

B. B. DUTT,

Controller of Examinations.

Calcutta University.

Senate House, the 25th July 1936.

NOTICE.

The next D. P. H. Examination will commence on the following days :—

Part I—Monday, 7th September 1936.

Part II—Monday, 21st September 1936.

Application and fee for admission to the examination must reach the University on or before Thursday, the 6th August 1936.

B. B DUTT,

Controller of Examinations.

Calcutta University.

Senate House, the 25th July 1936.

NOTICE.

The M. L. Examination will commence on Monday, the 7th December 1936, and fees and applications for admission to the examination must reach the University on or before Monday, the 7th September 1936.

B. B. DUTT,

Controller of Examinations.

University of Dacca.

Ramna, Dacca, the 18th July 1936.

(Approved by the Executive Council, dated the 18th July 1936.)

Time-table for the B.L. Examinations to be held in January 1937.

(The order of subjects given in the Time-table is liable to changes in detail.)

Preliminary and Final B.L. Examinations, January 1937.

Time—11 a.m. to 3 p.m.

1937.

Monday, January 25 ..		Muhammadan Law and Law of Persons.
Tuesday	„ 26	Roman Law.
Wednesday	„ 27 ..	Hindu Law
Thursday	„ 28 ..	Jurisprudence
Saturday	„ 30	Constitutional Law and History of English Law.
Monday, February 1 .		(*i*) Law of Transfer and Succession. (*ii*) Law of Persons and Law of Testamentary and Intestate Succession.
Tuesday	„ 2 .	(*i*) Law of Real Property, Equity and Trusts. (*ii*) Law of Real Property, Transfer and Trusts.
Wednesday	„ 3 ..	Law of Contract and Torts.
Thursday	„ 4 ..	Land Laws of Bengal.
Saturday	„ 6 ..	Law of Crimes.
Monday	„ 8 ..	Law of Evidence and Civil Procedure.

N. AHMAD, *Registrar.*

Chittagong Division.

Chittagong, the 23rd July 1936.

Rules for the admission of private candidates to the Calcutta University Intermediate and B. A. Examinations.

1. Subdivisional Inspectors of Schools, Sub-Inspectors of Schools and *bona fide* teachers of English schools, who have served as such for the full period of three academical years preceding the examinations, will be admitted to the abovementioned examinations.

2. Candidates for the Intermediate and B.A. Examinations must produce certificates of character and length of service from the Secretaries of their respective schools. Candidates for the B. A. Examination must forward with their application their F.A. or I.A. certificates and those for the Intermediate Examination their Entrance or Matriculation certificates. Candidates admitted to a former examination must produce the Registrar's receipt in addition.

3. Under section 19 of the Indian Universities Act, candidates for the Intermediate and B.A. Examinations are informed that their applications for admission to these examinations will not be considered unless they enclose with their applications to this office the sanction of the Senate to appear at the said examinations. Candidates, who have applied for or have obtained the special permission of the Senate for the purpose, are required under section 9, Chapter XV of the Revised Regulations dealing with the registration of University students, to apply at once, to the Registrar for the registration of their names as University students. No person will be deemed a "University student" unless and until his name has been duly registered, and none but "University students" will be eligible for admission to any University Examination other than the Matriculation.

4. The printed form of application should be carefully and correctly filled in and submitted to this office on or before the 18th December 1936 at the latest, together with other papers as mentioned in rules 2 and 3, after which no application will be received.

5. The dates of Intermediate and B. A. Examinations of 1937 may be obtained from the Controller of Examinations, Calcutta University.

B. RAHMAN,

Inspector of Schools,
Chittagong Division (offg.).

Registered No. C207

The Calcutta Gazette

THURSDAY, JULY 30, 1936.

PART II

Advertisements.

Notices

Advertisements, Notices, etc., intended for insertion in this part of the Gazette must be sent to Press before 12 noon on Saturday, and all costs deposited and proofs returned by 4 p.m. on Monday. Manuscripts and postal remittances must be addressed to Superintendent, Government Printing (Publication Branch), Bengal Government Press, Alipore.

For the convenience of advertisers located in Calcutta, arrangements have been made to accept advertisements and prepayment of charges at Sales Office, Ground Floor, Writers' Buildings, Calcutta. The latest time for receipt of advertisements for current week's Gazette has been extended till 4 p.m. on Mondays.

In the Court of the Sub-Judge at Khulna.

MONEY EXECUTION CASE No. 59 OF 1936.

The Khulna Loan Company, Ltd., decree-holder,

versus

Itay Dhirendra Nath Choudhury, judgment-debtor.

Date of sale—14th September 1936 (Monday), at 12 noon.

Claim—Rs. 7,917-10.

THE right, title and interest of the judgment-debtor in the scheduled property will be sold in the sale room of the above Court on the date and hour mentioned above :—

Schedule of property.

District Khulna, police-station Kaliganga, pargana Sundarban, tauzi No. 875, in the Khulna Collectorate in mauza Bangshipur, the annual revenue of which is Rs. 7,909 only in the 16 annas share. Out of the 16 annas share, the share of the judgment-debtor is only 4 annas. The value of the property is Rs. 700 as given by the decree-holder.

B. B. SARKAR, Sub-Judge.

Khulna, the 20th July 1936. (1486—1)

PROCLAMATION REQUIRING ATTENDANCE OF DEFENDANT.

(Order 5, Rule 20 of the Code of Civil Procedure.)

In the Court of Small Causes at Delhi.

SUIT No 2239 OF 1935

The Associated Hotels of India, Ltd , of Delhi, plaintiff,

against

Mr. C. P. Sheraton employed in 8th K. G. O. Lancers at Lucknow, defendant

Suit for Rs. 108-15.

To the defendant abovenamed.

WHEREAS you are intentionally evading service of summons it is hereby notified that if you shall not defend the case on the 7th day of October 1936, the day fixed for the final disposal, it will be heard and determined *ex parte*.

Given under my hand and the seal of the Court, this 18th day of July 1936.

[ILLEGIBLE], Judge.

(1499—1

THE COMMISSIONERS FOR THE PORT OF CHITTAGONG.

NOTIFICATION.

THE following Abstract of the Accounts of the Chittagong Port Fund for the year 1935-36 is published for general information under section 36, sub-section (2) of the Indian Ports Act, 1908 :—

PORT FUND—REVENUE ACCOUNT.

Abstract of Income and Expenditure for the year 1935-36.

Expenditure.

Particulars.	Amount. Rs. a. p.
Salaries and allowances (excluding vessels)	1,40,173 11 5
Provident Fund, pensions, etc.	25,659 1 0
Office expenses, legal expenses, etc.	7,629 9 8
Municipal and union board taxes	4,938 5 6
Upkeep of vessels	1,96,702 0 3
Maintenance and repairs	36,821 12 0
Miscellaneous	11,186 0 0
Total Ordinary Expenditure	4,23,110 7 10
Interest and repayment of principal	1,63,413 12 0
Contribution to Capital Account	6,972 12 6
Contribution to Depreciation Fund	67,429 0 0
GRAND TOTAL	6,60,926 0 4

Income.

Dues on goods—	
River dues	3,68,096 1 0
Customs duty on jute	21,297 11 0
Dues on vessels—	
Port dues on sea-going vessels, etc.	80,863 11 0
Port dues on ballam boats	3,899 3 0
Other dues on vessels	74,084 11 0
Boat license fees	6,823 8 0
Hire of vessels	6,485 0 0
Rent of land and buildings	41,005 13 9
Interest on investments, etc.	9,791 12 7
Miscellaneous	34,030 5 9
Total Ordinary Income	6,46,977 13 1
Excess of expenditure over income	13,948 3 3
GRAND TOTAL	6,60,926 0 4

PORT FUND CAPITAL ACCOUNT FOR 1935-36.

Receipts.

Opening balance on 1st April 1935	117 4 3
Loan from Government taken in March 1936	3,00,000 0 0
Advance from Port Fund Revenue Account	40,556 12 11
Advance from Depreciation Fund Account	1,65,467 14 10
Advance from Revenue Reserve Fund Account	12,288 0 0
Advance from General Reserve Fund Account	9,330 0 0
Contribution from Port Fund Revenue Account	6,972 12 6
Total	5,34,732 12 6

Expenditure.

Expenditure debitable to Government loan—	
"Patunga" Revetment	25,291 4 0
Juldia Training Wall	4,87,429 5 9
Repayment of advance from Pilotage Fund Revenue Account	10,000 0 0
Repayment of advance from Pilotage Fund Depreciation Account	5,000 0 0
	5,27,720 9 9
Expenditure met by transfer from Port Fund Revenue Account	6,972 12 6
	5,34,693 6 3
Balance on 31st March 1936	39 0 3
Total	5,34,732 12 6

MISCELLANEOUS RESERVE FUNDS.

Receipts and Payments Account for the year 1935-36.

Receipts.

Particulars	General Reserve Fund.	Revenue Reserve Fund.	Depreciation Fund
	Rs	Rs	Rs a. p
Opening balance on 1st April 1935 (investment at cost) ..	47,250	12 288	1,32,255 0 0
Contribution from Port Fund Revenue Account during the year	.	.	56 463 0 0
Interest on Rs 2,74,140 at credit of S D "Patunga" ..	..	..	10 966 0 0
Transfer of amount at credit of Pilotage Depreciation Fund on account of S. L "Toby"	..	..	30,650 0 0
Total ..	47,250	12,288	2,30,334 0 0

Payments.

Mooring materials	..	..	20,629 1 2
Construction of a new hawser boat	..	..	355 0 0
Advance to Port Fund Capital Account	9,330	12,288	1,65 467 14 10
Closing balance on 31st March 1936 (investment at cost) ..	37,920	..	43,882 0 0
Total	47,250	12,288	2,30 334 0 0

G. E. CUFFE,

Chairman, Port Commissioners, Chittagong.

Chittagong, the 22nd July 1936.

(1505—1)

In the High Court of Judicature at Fort William in Bengal, in Insolvency.

NOTICE OF ADJUDICATION ORDER.

No. 95 of 1936.

Re Clarence Jardin Hinton, formerly of No. 9-2, Temple Street, now of No 12, Temple Street, in the town of Calcutta, employed as an Assistant at Calcutta Ice Association, Ltd, 103, Clive Street, Calcutta, ex parte the debtor in person.

ON the 14th day of July 1936, an order was made by the High Court of Judicature at Fort William in Bengal in its insolvency jurisdiction adjudging the abovenamed an insolvent

Note.—All debts due to the estate should be paid to me.

Dated this 21st day of July 1936.

G. M FALKNER, Official Assignee.

In the High Court of Judicature at Fort William in Bengal, in insolvency.

NOTICE OF ADJUDICATION ORDER.

No 96 of 1936.

Re Lalit Mohun Chandra, residing at No 7, Nalini Set Road, in the town of Calcutta, and Uma Kanto Sen, residing at No. 32, Zakaria Street, Calcutta, lately carrying on business in co partnership with each other as bullion brokers, under the name and style of Lalit Mohun Chandra Uma Kanta Sen at No 68, Cotton Street, in Calcutta aforesaid, at present both without employment, ex parte the debtors.

R K Dey, debtors' solicitor.

ON the 15th day of July 1936, an order was made by the High Court of Judicature at Fort William in Bengal in its insolvency jurisdiction adjudging the abovenamed as insolvents

Note. - All debts due to the estate should be paid to me.

Dated this 21st day of July 1936

G. M FALKNER, Official Assignee.

In the High Court of Judicature at Fort William in Bengal, in insolvency.

NOTICE OF ADJUDICATION ORDER.

No. 97 of 1936.

Re Leslie Hope Butterfield, residing at No. 106-1, Corporation Street, in the town of Calcutta, lately working as an assistant in Armenian Steamer Ghat, Managing Agents Kilburn & Co., 4, Fairlie Place, Calcutta, and at present without any employment, ex parte the debtor in person.

ON the 17th day of July 1936, an order was made by the High Court of Judicature at Fort William in Bengal in its insolvency jurisdiction adjudging the abovenamed as an insolvent.

Note.—All debts due to the estate should be paid to me.

Dated this 21st day of July 1936.

G. M. FALKNER, Official Assignee.

In the High Court of Judicature at Fort William in Bengal, in insolvency.

NOTICE OF ADJUDICATION ORDER.

No. 98 of 1936.

Re Anilendra Chatterjee, residing at No. 11-7A, Kundu's Lane, Bhowanipur, in the suburbs of the town of Calcutta, but at present residing at No. 3, Balak Dutt Lane, in the town of Calcutta, a service-holder, ex parte the debtor in person.

ON the 18th day of July 1936, an order was made by the High Court of Judicature at Fort William in Bengal in its insolvency jurisdiction adjudging the abovenamed as an insolvent.

Note.—All debts due to the estate should be paid to me.

Dated this 21st day of July 1936.

G. M. FALKNER, Official Assignee.

In the High Court of Judicature at Fort William in Bengal, in insolvency.

NOTICE is hereby given that the dividends as noted below have been declared and will be paid to the creditors on application to the undersigned with necessary documents in support :—

No. 138 of 1910.

Estate Sarkies John Sarkies—1st dividend at Rs. 2-9 per cent.

No. 190 of 1927.

Estate Md. Himat Khan and others—3rd dividend at Rs. 2-4 per cent.

G. M. FALKNER, Official Assignee.

10, Old Post Office Street, Calcutta, the 25th July 1936.

(1548—1)

In the Court of the Sub-Judge at Asansol.

INSOLVENCY CASE No. 54 OF 1934.

G. A. Dairing, Guard, E. I. Railway, Asansol, petitioner.

NOTICE is hereby given that the abovenamed petitioner was adjudged insolvent on 31st May 1935, and that he was directed to apply for his discharge within one year from that day.

K. BANERJI, Sub-Judge.

Asansol, the 19th June 1936. (1308—1)

In the Court of the District Judge of Burdwan.

INSOLVENCY CASE No. 18 OF 1936.

NOTICE is hereby given that the debtor Kshetrapal Bhattacharjee, son of late Rai Bahadur Monindra Nath Bhattacharjee, of Krishnadebpur, police-station Kalna, district Burdwan, was adjudged insolvent on 3rd day of July 1936 by an order of this Court, and he was directed to apply for his discharge within six months.

M. H. B. LETHBRIDGE, District Judge.

Burdwan, the 20th July 1936. (1489—1)

ORDER OF ADJUDICATION.

Section 27 of the Provincial Insolvency Act, V of 1920.

In the Court of the Addl. District Judge at Chittagong.

INSOLVENCY APPLICATION No. 14 OF 1936.

PURSUANT to a petition, dated 17th April 1936, filed by debtor Shona Meah, son of late Nazumaddin Majhi, of Lalanagar, police-station Sitakund, and on the application of the debtor himself and on reading the application and hearing pleaders, it is ordered that the debtor be and the said debtor is hereby adjudged insolvent.

It is further ordered that the debtor do apply for his discharge by 7th April 1937. Babu Hemendra Nath Dutta, pleader, is appointed Receiver. Put up on 17th May 1937 for hearing of the application for discharge.

Dated this 6th day of July 1936.

J. GEORGE, Addl. District Judge.

(1506—1)

In the Court of the District Judge of Dacca.

INSOLVENCY CASE No. 7 OF 1936.

Kanai Lal Poddar, son of late Krishna Chandra Saha Poddar, resident of Simulia, police-station Lohajung, district Dacca, at present carrying on business at Nitaiganj, police-station Narainganj, district Dacca, petitioning creditor,

versus

The firm styled Kailash Chandra Barada Kanta Jnan Chandra Manohar Parbati Kanta Saha and its active members (1) Kailash Chandra Saha, (2) Parbati Kanta Saha, (3) Lokenath Saha, (4) Jnan Chandra Saha, (5) Beni Madhab Saha, (6) Jadab Lal Saha and (7) Sashi Mohan Saha, at present carrying on business at Nitaiganj, police-station Narainganj, district Dacca. The firm styled Matilal Hiralal Saha and its active member Kailash Chandra Saha, at present carrying on business at Kamalaghat, police-station Munshiganj, district Dacca, debtors, opposite party.

WHEREAS the abovenamed petitioning creditor has applied to this Court to adjudge the abovenamed debtors insolvents, the Court has fixed the 24th August 1936 for the hearing of the aforesaid petition, objection of the debtors and the creditors.

W. McC. SHARPE, District Judge.

Dacca, the 18th July 1936. (1510—1)

In the Court of the District Judge of Dacca.

INSOLVENCY CASE No. 8 OF 1936.

Jogesh Chandra Banerji, debtor-petitioner.

WHEREAS Jogesh Chandra Banerji, son of Girish Chandra Banerji, resident of 14, Dayaganj Road, district Dacca, debtor, has applied to this Court for being adjudicated an insolvent, the Court has fixed the 17th of August 1936 for the hearing of the aforesaid petition, examination of the debtor and the creditors.

W. McC. SHARPE, District Judge.

Dacca, the 18th July 1936. (1511—1)

In the Court of the District Judge of Faridpur.

INSOLVENCY CASE No. 72 OF 1936.

Lalit Mohan Bhoumik, son of late Indra Chandra Bhoumik, of Choumukha, police-station Nagarkanda, district Faridpur, creditor-petitioner,

versus

(1) Aduram Malla Barman, son of late Gour Sundar Malla Barman, (2) Nagarbashi Malla Barman, son of Aduram Malla Barman, (3) Raj Ballav Malla Barman, (4) Monoranjan Malla Barman, sons of Nagarbashi Malla Barman, of Choumukha, police-station Nagarkanda, district Faridpur, debtors, opposite party.

NOTICE is hereby given that the abovenamed creditor-petitioner has applied to this Court to have the debtors, opposite party, adjudged insolvents, and that the 12th August 1936 has been fixed for the hearing of the application.

K. B. ROY, District Judge.

Faridpur, the 22nd July 1936. (1497—1)

In the Court of the District Judge of Hooghly.

INSOLVENCY PETITION No. 16 OF 1936.

NOTICE is hereby given that Sivapada Bose, son of late Jagadananda Bose, of Itachona, thana Pandua, district Hooghly, was on the 23rd May 1936 adjudged an insolvent. The 22nd August 1936 has been fixed for framing a schedule and creditors are required to prove their claims on that day.

B. M. SINGH, District Judge.

Chinsura, the 16th July 1936. (1471—1)

In the Court of the District Judge of Hooghly.

NOTICE is hereby given under clause (2) of section 12 of the Provincial Insolvency Act, V of 1920, to his creditors that the insolvency petition of Sattar Mia of Champdani, thana Bhadreswar, district Hooghly, has been admitted by this Court as No. 60 of 1936 and that the 15th August 1936 has been fixed for the hearing thereof.

[ILLEGIBLE], *for* District Judge.

Chinsura, the 18th July 1936. (1487—1)

In the Court of the District Judge of Hooghly.

INSOLVENCY PETITION No. 27 OF 1936.

NOTICE is hereby given that Panchanan Ghosh, son of late Biswambhar Ghosh, of Dehi Bahera, thana Arambagh, district Hooghly, was on the 4th July 1936 adjudged an insolvent. The 3rd October 1936 has been fixed for framing a schedule and creditors are required to prove their claims on that day.

[ILLEGIBLE], *for* District Judge.

Chinsura, the 18th July 1936. (1488—1)

In the Court of the Addl. District Judge of Hooghly at Howrah.

NOTICE is hereby given under the Provincial Insolvency Act, V of 1920, to his creditors that the insolvency petition of Kunja Behari Hazra, son of late Kura Ram Hazra, of Jhikhira, thana Amta, district Howrah, has been admitted by this Court as No. 95 of 1936 and that the 31st July 1936 has been fixed for the hearing thereof.

S. N. GUHA RAY, Addl. District Judge.

Howrah, the 17th July 1936. (1502—1)

In the Court of the Additional District Judge at Howrah.

INSOLVENCY CASE No. 97 OF 1936.

NOTICE is hereby given that the creditor Lutfar Rahaman of 104, Jolapara Lane, Howrah, has applied to this Court to adjudge Shymji Govindji of 8/9, Dobson Lane, Howrah, insolvent, and that the Court has admitted his application and fixed 7th August 1936 for hearing the application.

S. N. GUHA RAY, Addl. District Judge.

Howrah, the 23rd July 1936. (1536—1)

In the Court of the District Judge of Jalpaiguri.

INSOLVENCY CASE No. 7 OF 1936.

KARTIK CHANDRA SAHA, son of late Gopal Chandra Saha, by caste Hindu, by profession service-holder, now residing and working at Jabramali, police-station Maynaguri, district Jalpaiguri, has applied to this Court to be adjudged insolvent.

The 14th day of August 1936 has been fixed for examination of the petitioner at Jalpaiguri.

S. C. GHOSE, Registrar, *for* District Judge.

Jalpaiguri, the 22nd July 1936.

(1539—1)

ORDER OF ADJUDICATION.

Section 27 of the Provincial Insolvency Act, V of 1920.

In the Court of the District Judge at Krishnagar.

INSOLVENCY APPLICATION No. 14 OF 1936.

PURSUANT to a petition, dated 8th April 1936, filed by Tarak Nath Chatterji, son of late Kali Prosanna Chatterji, of Nabadwip, police-station Nabadwip, district Nadia, debtor, and on the application of the debtor himself and on reading his application and hearing his pleader, it is ordered that the debtor be and the said debtor is hereby adjudged insolvent.

It is further ordered that the debtor do apply for his discharge within six months from this date.

Dated this 8th day of July 1936.

A. M. AHMAD, District Judge.

(1491—1)

In the Court of the District Judge of Murshidabad.

INSOLVENCY CASE No. 42 OF 1934.

In the matter of Amulya Kumar Biswas, son of late Broja Nath Biswas, of Bhaturia, at present of Saidabad, Maturapara, police-station Berhampore town, district Murshidabad, debtor-petitioner.

NOTICE is hereby given to all concerned that the abovenamed debtor, who was adjudged an insolvent by an order of this Court, dated the 6th July 1935, has now applied for his final discharge and that the 15th day of August 1936 has been fixed for the hearing of his application.

G. B. SYNGE, District Judge.

Berhampore, the 20th July 1936. (1495—1)

In the Court of the District Judge of Noakhali.

INSOLVENCY CASE No. 12 OF 1935.

NOTICE is hereby given that Abdul Kadir Miah, son of late Omar Ali, of Alipur, police-station Feni, district Noakhali, having applied to this Court for his discharge under section 41 of the Insolvency Act, the 1st August 1936 has been fixed for hearing of the application.

J. N. SEN, *for* District Judge.

Noakhali, the 20th July 1936. (1492—1)

In the Court of the District Judge of Noakhali.

INSOLVENCY CASE No. 10 OF 1936.

NOTICE is hereby given that Basharat Ali Miah, son of late Osman Ali Bepari, of Mamkpur, police-station Senbag, district Noakhali, having applied to this Court for being adjudged an insolvent, the 15th day of August 1936 has been set down for hearing of the application.

J. N. SEN, *for* District Judge.

Noakhali, the 20th July 1936. (1493—1)

ORDER OF ADJUDICATION.

In the Court of the District Judge of Noakhali.

INSOLVENCY CASE No. 6 OF 1936.

PURSUANT to a petition filed by Nabab Ali, son of late Ahmed Ali, of Badaripur, police-station and district Noakhali, and on reading the application and on hearing the debtor, it is ordered that the said debtor is hereby adjudged insolvent.

Dated 13th July 1936.

J. N. SEN, *for* District Judge.

(1494—1)

In the Court of the District Judge of 24-Parganas.

INSOLVENCY CASE No. 25 OF 1936.

Satish Chandra Das of 43, Chingrighata Road, police-station Entally, 24-Parganas, applicant.

To Maihar Stone Lime Co., Ltd. of 14, Hare Street, Calcutta, and others, creditors.

ON the 18th day of July 1936 it was ordered that the matter of the petition of the applicant be heard on the 17th day of August 1936, and that the said applicant do attend to be examined by this Court on that date.

T. H. ELLIS, District Judge.

Alipore, the 22nd July 1936. (1508—1)

In the Court of the District Judge of 24-Parganas.

INSOLVENCY CASE No. 26 of 1936.

Ganesh Chandra Roy of 123-1A, Balaram De Street, Calcutta, creditor-applicant.

To Amritalal Mallick of Sukchar, police-station Khardah, 24-Parganas, debtor.

ON the 21st day of July 1936 it was ordered that the matter of the petition of the applicant be heard on the 17th day of August 1936, and that the said applicant do attend to be examined by this Court on that date.

T. H. ELLIS, District Judge.

Alipore, the 22nd July 1936. (1509—1)

NOTICE TO CREDITORS OF APPLICATION FOR DISCHARGE.

Section 41 (1) of the Provincial Insolvency Act, V of 1920.

In the 4th Court of the Sub-Judge at Alipore.

INSOLVENCY CASE No. 358 OF 1935.

Mrs A. I. Hatton of 8/2, South Road, Entally, 24-Parganas, applicant.

TAKE notice that the abovenamed insolvent has applied at the Court for her discharge, and that the Court has fixed the 3rd day of August 1936 at 11 o'clock for hearing the application.

Dated this 13th day of July 1936.

S. P. BOSE, Sub-Judge.
(1513—1)

NOTICE TO CREDITORS OF APPLICATION FOR DISCHARGE.

Section 41 (1) of the Provincial Insolvency Act, V of 1920.

In the 4th Court of the Sub-Judge at Alipore.

INSOLVENCY CASE No. 454 OF 1935.

Srimotty Mohini Bewa of 2, Arip Road, Manicktola, 24-Parganas, applicant.

TAKE notice that the abovenamed insolvent has applied at the Court for her discharge and that the Court has fixed the 24th day of August 1936 at 11 o'clock for hearing the application.

Dated this 13th day of July 1936.

S. P. BOSE, Sub-Judge.
(1514—1)

NOTICE TO CREDITORS OF APPLICATION FOR DISCHARGE.

Section 41 (1) of the Provincial Insolvency Act, V of 1920.

In the 4th Court of the Sub-Judge at Alipore.

INSOLVENCY CASE No. 460 OF 1935.

Satya Charan Roy of Ananda Puri, Barrackpore, 24-Parganas, applicant.

TAKE notice that the abovenamed insolvent has applied at the Court for his discharge, and that the Court has fixed the 24th day of August 1936 at 11 o'clock for hearing the application.

Dated this 13th day of July 1936.

S. P. BOSE, Sub-Judge.
(1515—1)

ORDER OF ADJUDICATION.

Section 27 of the Provincial Insolvency Act, V of 1920.

In the 4th Court of the Sub-Judge at Alipore.

INSOLVENCY APPLICATION No. 106 OF 1936.

PURSUANT to a pet tion, dated 4th March 1936, filed by Ram Dhan Mala of Lakshighat, police-station Khardah, 24-Parganas, debtor, and on the application of the debtor himself and on reading his application and hearing his pleader, it is ordered that the debtor be and the said debtor is hereby adjudged insolvent.

It is further ordered that the debtor do apply for his discharge within 12th January 1937.

Dated this 13th day of July 1936.

S. P. BOSE, Sub-Judge.

(1516—1)

ORDER OF ADJUDICATION.

Section 27 of the Provincial Insolvency Act, V of 1920.

In the 4th Court of the Sub-Judge at Alipore.

INSOLVENCY APPLICATION No. 150 OF 1936.

PURSUANT to a petition, dated 6th April 1936, filed by Hari Kurmi of Alambazar, Baranagore, 24-Parganas, debtor, and on the application of the debtor himself and on reading his application and hearing his pleader, it is ordered that the debtor be and the said debtor is hereby adjudged insolvent.

It is further ordered that the debtor do apply for his discharge within 12th January 1937.

Dated this 13th day of July 1936.

S. P. BOSE, Sub-Judge.

(1517- 1)

ORDER OF ADJUDICATION.

Section 27 of the Provincial Insolvency Act, V of 1920.

In the 4th Court of the Sub-Judge at Alipore.

INSOLVENCY APPLICATION No. 168 OF 1936.

PURSUANT to a petition, dated 17th April 1936, filed by Sheik Foim of Uranpara, Titagarh, 24-Parganas, debtor, and on the application of the debtor himself and on reading his application and hearing his pleader, it is ordered that the debtor be and the said debtor is hereby adjudged insolvent.

It is further ordered that the debtor do apply for his discharge within 12th January 1937.

Dated this 13th day of July 1936.

S. P. BOSE, Sub-Judge.

(1518—1)

ORDER OF ADJUDICATION.

Section 27 of the Provincial Insolvency Act, V of 1920.

In the 4th Court of the Sub-Judge at Alipore.

INSOLVENCY APPLICATION No. 181 OF 1936.

PURSUANT to a petition, dated 20th April 1936, filed by Nalini Mohan Banerjee of 44/2, Chakraberia Road, Bhowanipore, 24-Parganas, debtor, and on the application of the debtor himself and on reading his application and hearing his pleader, it is ordered that the debtor be and the said debtor is hereby adjudged insolvent.

It is further ordered that the debtor do apply for his discharge within 22nd January 1937.

Dated this 20th day of July 1936.

S. P. BOSE, Sub-Judge.

(1519—1)

ORDER OF ADJUDICATION.

Section 27 of the Provincial Insolvency Act, V of 1920.

In the 4th Court of the Sub-Judge at Alipore.

INSOLVENCY APPLICATION No. 220 OF 1936.

PURSUANT to a petition, dated 8th May 1936, filed by Aprokash Singh of 42/22/2, Muraripukur Road, Manicktola, 24-Parganas, debtor, and on the application of the debtor himself and on reading his application and hearing his pleader, it is ordered that the debtor be and the said debtor is hereby adjudged insolvent.

It is further ordered that the debtor do apply for his discharge within 12th January 1937.

Dated this 13th day of July 1936.

S. P. BOSE, Sub-Judge.

(1520—1)

ORDER OF ADJUDICATION.

Section 27 of the Provincial Insolvency Act, V of 1920.

In the 4th Court of the Sub-Judge at Alipore.

INSOLVENCY APPLICATION No. 237 OF 1936.

PURSUANT to a petition, dated 19th May 1936, filed by Panchanan Mitter of Nritya Gopal Chatterjee Lane, Tala, post office Cossipore, 24-Parganas, debtor, and on the application of the debtor himself and on reading his application and hearing his pleader, it is ordered that the debtor be and the said debtor is hereby adjudged insolvent.

It is further ordered that the debtor do apply for his discharge within 21st January 1937.

Dated this 20th day of July 1936.

S. P. BOSE, Sub-Judge.

(1521—1)

ORDER OF ADJUDICATION.

Section 27 of the Provincial Insolvency Act, V of 1920.

In the 4th Court of the Sub-Judge at Alipore.

INSOLVENCY APPLICATION No. 240 OF 1936.

PURSUANT to a petition, dated 20th May 1936, filed by Bandhu Goala of 4, Shyam Bose Road, Chetla, Alipore, 24-Parganas, debtor, and on the application of the debtor himself and on reading his application and hearing his pleader, it is ordered that the debtor be and the said debtor is hereby adjudged insolvent.

It is further ordered that the debtor do apply for his discharge within 22nd January 1937.

Dated this 20th day of July 1936.

S. P. BOSE, Sub-Judge.

(1522—1)

In the 4th Court of the Sub-Judge of 24-Parganas.

INSOLVENCY CASE No. 241 OF 1936.

Betal and Sriram of 5, Justice Dwarka Nath Road, Bhowanipore, 24-Parganas, applicant.

To Bharadhan Thakur of 3, Nilmoni Dutt Lane, Calcutta, creditor.

ON the 6th day of July 1936 it was ordered that the matter of the petition of the applicant be heard on the 10th day of August 1936, and that the said applicant do attend to be examined by this Court on that date.

B. P. GHOSH, Sub-Judge-in-charge.

Alipore, the 10th July 1936. (1523—1)

In the 4th Court of the Sub-Judge of 24-Parganas.

INSOLVENCY CASE No. 274 OF 1936.

Ramu Dasad of 128, Shahabbagan near Kalighat Tram Depôt, Tollygunj, 24-Parganas, applicant.

To Pir Mohammad of P69, Russa Road, Kalighat, Calcutta, and others, creditors.

ON the 7th day of July 1936 it was ordered that the matter of the petition of the applicant be heard on the 17th day of August 1936, and that the said applicant do attend to be examined by this Court on that date.

B. P. GHOSH, Sub-Judge-in-charge.

Alipore, the 10th July 1936. (1524—1)

In the 4th Court of the Sub-Judge of 24-Parganas.

INSOLVENCY CASE No. 300 OF 1936.

Sk. Majherali of 22, Austenber, Kidderpore, 24-Parganas, applicant.

To Ram Charita Sahu, Kalibazar, Kidderpore, Calcutta, and others, creditors.

ON the 4th day of July 1936 it was ordered that the matter of the petition of the applicant be heard on the 17th day of August 1936, and that the said applicant do attend to be examined by this Court on that date.

B. P. GHOSH, Sub-Judge-in-charge.

Alipore, the 10th July 1936. (1525—1)

In the 4th Court of the Sub-Judge of 24-Parganas.

INSOLVENCY CASE No. 303 OF 1936.

Haripada Dutt of Bhatpara, police-station Jagatdal, 24-Parganas, applicant.

To Tulsi Das Singh of Kankinara Paper Mill No. 2, 24-Parganas, and others, creditors.

ON the 4th day of July 1936 it was ordered that the matter of the petition of the applicant be heard on the 17th day of August 1936, and that the said applicant do attend to be examined by this Court on that date.

B. P. GHOSH, Sub-Judge-in-charge.

Alipore, the 10th July 1936. (1526—1)

In the 4th Court of the Sub-Judge of 24-Parganas.

INSOLVENCY CASE No. 305 OF 1936.

Behary Chamar of 109/3, Hazra Road, Bhowanipore, 24-Parganas, applicant.

To Amir Chand Panjabi of 6, Andul Raj Road, Kalighat, Calcutta, and others, creditors.

ON the 6th day of July 1936 it was ordered that the matter of the petition of the applicant be heard on the 17th day of August 1936, and that the said applicant do attend to be examined by this Court on that date.

B. P. GHOSH, Sub-Judge-in-charge.

Alipore, the 10th July 1936. (1527—1)

In the 4th Court of the Sub-Judge of 24-Parganas.

INSOLVENCY CASE No. 307 OF 1936.

Jawala Prasad *alias* Jwala Dutt of Halsibagan No. I, police-station Manicktola, 24-Parganas, applicant.

To Ishri Prasad Bal Mukund of Delhi, creditor.

ON the 6th day of July 1936 it was ordered that the matter of the petition of the applicant be heard on the 17th day of August 1936, and that the said applicant do attend to be examined by this Court on that date.

B. P. GHOSH, Sub-Judge-in-charge.

Alipore, the 10th July 1936. (1528—1)

In the 4th Court of the Sub-Judge of 24-Parganas.

INSOLVENCY CASE No. 308 OF 1936.

Haridas Shaw of 22/C, School Row, police-station Bhowanipore, 24-Parganas, applicant.

To Nursingdas Agarwalla of 23/5/2, Tollygunge Road, police-station Tollygungo, Calcutta, and others, creditors.

ON the 15th day of July 1936 it was ordered that the matter of the petition of the applicant be heard on the 31st day of August 1936, and that the said applicant do attend to be examined by this Court on that date.

S. P. BOSE, Sub-Judge.

Alipore, the 20th July 1936. (1529—1)

In the 4th Court of the Sub-Judge of 24-Parganas.

INSOLVENCY CASE No. 309 OF 1936.

Durga Dutt Agarwalla of 7, Palmar Bazar, Katua Pol, 24-Parganas, applicant.

To Ram Chandra Sewdutt Roy of Gauhati, Assam, and others, creditors.

ON the 13th day of July 1936 it was ordered that the matter of the petition of the applicant be heard on the 24th day of August 1936, and that the said applicant do attend to be examined by this Court on that date.

S. P. BOSE, Sub-Judge.

Alipore, the 22nd July 1936. (1530—1)

In the 4th Court of the Sub-Judge of 24-Parganas.

INSOLVENCY CASE No. 310 OF 1936.

Eric Edwin DeSantos of 4B, Gope Lane, Entally, 24-Parganas, applicant.

To Shuja Khan and Mera Khan of 89-1, Jhautola Road, Park Circus, and others, creditors.

ON the 14th day of July 1936 it was ordered that the matter of the petition of the applicant be heard on the 24th day of August 1936, and that the said applicant do attend to be examined by this Court on that date.

S. P. BOSE, Sub-Judge.

Alipore, the 20th July 1936. (1531—1)

In the 4th Court of the Sub-Judge of 24-Parganas.

INSOLVENCY CASE No. 311 OF 1936.

Esi Mulla of 12/2, Puddapukur East Lane, Kidderpore, 24-Parganas, applicant.

To Jahorilal Mahajan and Bros. of 42, Watgunge Street, Kidderpore, and others, creditors.

ON the 14th day of July 1936 it was ordered that the matter of the petition of the applicant be heard on the 24th day of August 1936, and that the said applicant do attend to be examined by this Court on that date.

S. P. BOSE, Sub-Judge.

Alipore, the 20th July 1936. (1532—1)

In the 4th Court of the Sub-Judge of 24-Parganas.

INSOLVENCY CASE No. 312 OF 1936.

Bij Sau of Bijpore, police-station Bijpore, 24-Parganas, applicant.

To Ramjitan Sau of Bijpore, police-station Kanchrapara, 24-Parganas, and others, creditors.

ON the 15th day of July 1936 it was ordered that the matter of the petition of the applicant be heard on the 31st day of August 1936, and that the said applicant do attend to be examined by this Court on that date.

S. P. BOSE, Sub-Judge.

Alipore, the 20th July 1936. (1533—1)

In the 4th Court of the Sub-Judge of 24-Parganas.

INSOLVENCY CASE No. 313 OF 1936.

Nagendra Nath Law carrying on business under the name and style of Naggin Law and Sons at 25, Chetla Road, Alipore, 24-Parganas, creditor-applicant,

To Basanta Kumar Roy and Sons of Sahapur, police-station Behala, 24-Parganas, debtor.

ON the 17th day of July 1936 it was ordered that the matter of the petition of the applicant be heard on the 24th day of August 1936, and that the said applicant do attend to be examined by this Court on that date.

S. P. BOSE, Sub-Judge.

Alipore, the 22nd July 1936. (1534—1)

In the 4th Court of the Sub-Judge of 24-Parganas.

INSOLVENCY CASE No. 314 OF 1936.

L. E. Moreno of 4/28, Garden Reach Port Commissioners' quarters, police-station Garden Reach, 24-Parganas, applicant,

To Hira Lal Shaw of 11, Dobson Lane, Howrah, and others, creditors.

ON the 20th day of July 1936 it was ordered that the matter of the petition of the applicant be heard on the 31st day of August 1936, and that the said applicant do attend to be examined by this Court on that date.

S. P. BOSE, Sub-Judge.

Alipore, the 22nd July 1936. (1535—1)

ORDER ANNULLING ADJUDICATION.

Section 43 of the Provincial Insolvency Act, V of 1920.

In the Court of the District Judge at Midnapore.

INSOLVENCY CASE No. 50 OF 1931.

J. Paton, retired Driver, Bengal Nagpur Railway, Kharagpur, district Midnapore, petitioner.

WHEREAS the abovenamed petitioner was adjudicated an insolvent by order of the Court, dated 14th May 1932, and whereas the insolvent did not appear on the date fixed by the Court for his appearance, it is ordered that the order of adjudication, dated 14th May 1932, against the abovenamed petitioner be and the same is hereby annulled.

Dated this 18th day of July 1936.

S. K. HALDAR, District Judge.

ORDER ANNULLING ADJUDICATION.

Section 43 of the Provincial Insolvency Act, V of 1920.

In the 4th Court of the Sub-Judge at Alipore.

INSOLVENCY APPLICATION No. 125 OF 1935.

Nibaran Chandra Maity, applicant.

WHEREAS Nibaran Chandra Maity of Chandidhel, police-station Falta, 24-Parganas, debtor, does not proceed with his application for discharge, it is ordered that the order of adjudication, dated 29th July 1935, against the debtor be and the same is hereby annulled.

Dated this 1st day of April 1936.

B. P. GHOSH, Sub-Judge-in-charge.

ORDER ANNULLING ADJUDICATION.

Section 43 of the Provincial Insolvency Act, V of 1920.

In the 4th Court of the Sub-Judge at Alipore.

INSOLVENCY APPLICATION No. 289 OF 1935.

Mahabharat Das Deuti Ghose, applicant.

WHEREAS Mahabharat Das Deuti Ghose of Boran Gajan Gohalia, police-station Bishnupur, 24-Parganas, debtor, does not proceed with the application for discharge, it is ordered that the order of adjudication, dated 11th December 1935, against the debtor be and the same is hereby annulled.

Dated this 24th day of June 1936.

B. P. GHOSH, Sub-Judge-in-charge.

ORDER ANNULLING ADJUDICATION.

Section 43 of the Provincial Insolvency Act, V of 1920.

In the 4th Court of the Sub-Judge at Alipore.

INSOLVENCY APPLICATION No. 295 OF 1935.

V. G. Culbert, applicant.

WHEREAS V. G. Culbert of 82, Pipe Road, Kidderpore, 24-Parganas, debtor, does neither appear nor apply for discharge within the specified time, it is ordered that the order of adjudication, dated 18th December 1935, against the debtor be and the same is hereby annulled.

Dated this 18th day of June 1936.

B. P. GHOSH, Sub-Judge-in-charge.

ORDER ANNULLING ADJUDICATION.

Section 43 of the Provincial Insolvency Act, V of 1920.

In the 4th Court of the Sub-Judge at Alipore.

INSOLVENCY APPLICATION No. 311 of 1935.

Mahabir Konar, applicant.

WHEREAS Mahabir Konar of 4, Muraripukur Road, police-station Manicktola, 24-Parganas, debtor, does neither appear nor apply for discharge within the specified time, it is ordered that the order of adjudication, dated 14th December 1935, against the debtor be and the same is hereby annulled.

Dated this 15th day of June 1936.

B. P. GHOSH, Sub-Judge-in-charge.

ORDER ANNULLING ADJUDICATION.

Section 43 of the Provincial Insolvency Act, V of 1920.

In the 4th Court of the Sub-Judge at Alipore.

INSOLVENCY APPLICATION No. 353 OF 1935.

Amichan Sha, applicant.

WHEREAS Amichan Sha of Behala, police-station Behala, 24-Parganas, debtor, does neither appear nor apply for discharge within the specified time, it is ordered that the order of adjudication, dated 6th January 1936, against the debtor be and the same is hereby annulled.

Dated this 6th day of July 1936.

B. P. GHOSH, Sub-Judge-in-charge.

ORDER ANNULLING ADJUDICATION.

Section 43 of the Provincial Insolvency Act, V of 1920.

In the 4th Court of the Sub-Judge at Alipore.

INSOLVENCY APPLICATION No. 404 of 1935.

Ram Jiban Malla, applicant.

WHEREAS Ram Jiban Malla of Mulajore, Shamnagar, police-station Jagaddal, 24-Parganas, debtor does neither appear nor apply for discharge within the specified time, it is ordered that the order of adjudication, dated 6th January 1936, against the debtor be and the same is hereby annulled.

Dated this 6th day of July 1936.

B. P. GHOSH, Sub-Judge-in-charge.

ORDER ANNULLING ADJUDICATION.

Section 43 of the Provincial Insolvency Act, V of 1920.

In the 4th Court of the Sub-Judge at Alipore.

INSOLVENCY APPLICATION No. 508 OF 1935.

Balli Mia, applicant.

WHEREAS Balli Mia of Khardah, police-station Khardah, 24-Parganas, debtor, does neither appear nor apply for discharge within the specified time, it is ordered that the order of adjudication, dated 20th January 1936, against the debtor be and the same is hereby annulled.

Dated this 20th day of July 1936.

S. P. BOSE, Sub-Judge.

ORDER ANNULLING ADJUDICATION.

Section 43 of the Provincial Insolvency Act, V of 1920.

In the 4th Court of the Sub-Judge at Alipore.

INSOLVENCY APPLICATION No. 510 OF 1935.

Teri Sing, applicant.

WHEREAS Teri Sing of Hazinagar, police-station Naihati, 24-Parganas, debtor, does neither appear nor apply for discharge within the specified time, it is ordered that the order of adjudication, dated 20th January 1936, against the debtor be and the same is hereby annulled.

Dated this 21st day of July 1936.

S. P. BOSE, Sub-Judge.

NOTICE TO CREDITORS OF THE DATE OF HEARING OF AN INSOLVENCY PETITION.

Section 19 of the Provincial Insolvency Act, V of 1920.

In the Court of the District Judge at Chittagong.

INSOLVENCY APPLICATION No. 23 OF 1936.

WHEREAS creditor Srimanta Ram Biswas, son of Pyari Mohan Biswas, of Chikdair, police-station Raozan, Chittagong, has applied to this Court, by a petition, dated 7th day of July 1936, to have declared (1) Ramesh Chandra Mallik, (2) Jogesh Chandra Mallik, (3) Nil Kamal Mallik, (4) Raj Kamal Mallik and (5) Nagendra Chandra Mallik, sons of Har Chandra Mallik, of Chikdair, police-station Raozan, Chittagong, debtors, insolvents, under the Provincial Insolvency Act, V of 1920, this is to give notice that the Court has fixed the 25th day of August 1936 for the hearing of the aforesaid petition and the examination of the petitioning creditor.

J. GEORGE, *for* District Judge.

Chittagong, the 25th July 1936. (1547—1)

MR. PURNENDU KUMAR BATABYAL, M.Sc., B.L., intends to join the High Court as an Advocate.

(1545—4)

APPLICATIONS are invited from Government Certificated Auditors for auditing accounts of Aided High Schools in the Presidency Division. The minimum charge for examining the accounts of a school should be mentioned. Applications must reach the undersigned on or before 1st August.

M. A. JAAFAR, Inspector of Schools,
Presidency Division.

APPLICATIONS for the post of Superintendent of my office will be received up to the 6th August 1936. Applicants who must be Ministerial Officers of Government already must state their age, permanent post, pay and office experience in their applications and enclose copies of all remarks recorded in their service books.

P. J. GRIFFITHS, Dy. Commr., Darjeeling.

Darjeeling, the 18th July 1936.

WANTED a trained and experienced woman graduate, whose special subjects should be Geography and either Hand-work or Physical Culture, in the revised scale of Rs. 75—8/2—115—5/2—125 (efficiency bar)—5/2—135—10/2—175.

Applications stating age, qualifications, experience, etc., should reach the Principal, Eden High School for Girls, Dacca, on or before the 18th August 1936.

1. WANTED a Lecturer for the Teachers' Training College at Dacca, in the scale of Rs. 125—25/2—150—20/2—250—15/2—310—20/2—350 (efficiency bar after the 16th stage).

2. The Lecturer will be required to lecture on the special methods of teaching Mathematics, Geography and Elementary Science and to supervise Practice Teaching.

3. The Lecturer must hold a first or second class M.Sc. degree as also a first class B. T. degree of an Indian University or possess corresponding qualifications of a British or Continental University.

4. All things being equal, preference will be given to a qualified Moslem candidate having teaching experience in a good school and having a good English accent.

5. Canvassing in any form (direct or indirect) will be regarded as a disqualification.

6. Applications with details of qualifications, teaching experience, date of birth, father's name, particulars of home and present address (village, post office, thana and district) should be submitted to the Principal, Teachers' Training College, Dacca, on or before the 31st July 1936.

WANTED by the Government of Bengal an Inspector of European Schools from 2nd November 1936.

2. Candidates, who should be Europeans or Anglo-Indians, must be British subjects and not below 35 years of age.

3. The candidate selected will be appointed on contract for a period of five years in the first instance, on the following scale of pay :—

(*a*) If he is of Asiatic domicile, initial pay according to age, as shown below, and in the scale of Rs. 650—50/2—1,000 :—

Age.	Initial pay.
	Rs.
35	650
36	650
37	700
38	700
39	750
40 and over ..	750

(*b*) If he is of non-Asiatic domicile—

	Rs.
1st year ..	1,000
2nd year ..	1,000
3rd year ..	1,100
4th year ..	1,100
5th year ..	1,200

4. The person appointed will be entitled to a conveyance allowance of Rs. 25 a month and, if he is of non-Asiatic domicile, to a compensatory (house rent) allowance at the rate admissible under the Calcutta House Allowance Rules.

5. Candidates must possess a first class Master's degree of an Indian University, or a high Honours degree in Arts or Science of a European or American University, and also a degree or diploma in Education. They must also have had adequate teaching experience and possess administrative capacity. Preference will be given to candidates having experience of inspection work.

6. The appointment will be non-pensionable, but the person appointed will be required to join the Contributory Provident Fund, Bengal, and his leave will be regulated according to the rules in force for officers recruited in India.

7. Canvassing in any form will be regarded a disqualification.

8. Applications will be received up to 31st August 1936 by the Assistant Director of Public Instruction, Bengal, Writers' Buildings, Calcutta, from whom further particulars may be obtained.

THE Bengal and Madras Service Family Pension Fund which is provisionally managed and assisted by Government has for its object the provision of monthly pensions for the maintenance of the widows and children of subscribers and is open, with certain exceptions, to all active and pensioned members of the Uncovenanted service of Government (except those serving under the Government of Bombay), and to Local Fund servants earning pensions from Government. Some of the special features of the fund are (1) that widowed daughters incapable of re-marriage or children labouring under such mental or bodily infirmities as incapacitate them from earning their livelihood or preclude the possibility of marriage (in case of a daughter) are admitted to its benefits; and (2) that subscribers to the Widows and Daughters' branches are entitled to a refund of 30 per cent. of the premia paid, should the nominee predecease them after five years of admission. The second quinquennial valuation of the Fund has been completed by the Actuary to the Government of India, and his report discloses very favourable results. For forms of application and rules of the Fund apply to the Accountant-General, Bengal, Imperial Secretariat Buildings, Calcutta.

Notes.

PORTIONS of the following notes of the Calcutta circle of issue are stated to have been destroyed. Payment of their value has been claimed by the person whose name is placed against the numbers. Any other person claiming a right to them is warned to communicate at once with the undersigned.

Regtd. No.	No. of notes.	Value. Rs.	Name and address of the claimant.
W. D. 11 of 36	S/68,153804 S/78,877252	100 100	Mr. Lajja Ram Gupta, B.A. LL.B., Pleader, Hissar, Punjab.

S. GUPTA, Currency Officer.

Calcutta, the 11th July 1936.

Note.

PORTION of the following note of the Calcutta circle of issue is stated to have been destroyed. Payment of its value has been claimed by the person whose name is placed against the number. Any other person claiming a right to it is warned to communicate at once with the undersigned :—

Regtd. No.	No. of the note.	Value. Rs.	Name and address of the claimant.
W. D. 12 of 36	RE/56,40138	100	Mr. Sita Ram Paswan, c/o Babu Ramcharitra Prasad Sinha, Pleader, Topkhana Bazar, Monghyr.

S. GUPTA, Currency Officer.

Calcutta, the 13th July 1936.

Stolen.

THE Government Promissory Note No. 215228 of the 3½ per cent. loan of 1854-55 for Rs. 1,000, originally standing in the name of Shora Binda Kanoongoy (since deceased), the proprietor by whom it was never endorsed to any other person, having been stolen, notice is hereby given that payment of the above note and the interest thereupon have been stopped at the Public Debt Office, Reserve Bank of India, Calcutta, and that application is about to be made for the issue of duplicate in favour of Mohendra Kumar Kanungoe, Surendra Kumar Kanungoe and Debendra Kumar Kanungoe. The public are cautioned against purchasing or otherwise dealing with the abovementioned security.

Signature of the advertiser— Mohendra Kumar Kanungoe, retired Inspector of Police.

Residence—Ice Factory Road, Chittagong (Bengal). (1540—3)

Lost.

THE Government Promissory Note No. 017433 of 3 per cent. loan of 1945-55 for Rs. 1,000, originally standing in the name of the Imperial Bank of India and last endorsed to the District Magistrate, Tippera, the proprietor, on behalf of the Comilla Victoria College, by whom it was never endorsed to any other person, having been lost, notice is hereby given that payment of the above note and the interest thereupon have been stopped at the Public Debt Office, Reserve Bank of India, Calcutta, and that application is about to be made for the issue of the duplicate in favour of the proprietor. The public are cautioned against purchasing or otherwise dealing with the abovementioned security.

Name of the person notified—S. N. Ray, District Magistrate, Tippera, Comilla.

Comilla, the 22nd July 1936. (1504—3)

Imperial Bank of India.

NOTICE is hereby given that the 16th local meeting of the shareholders of the Imperial Bank of India on the Branch Register of shareholders kept at the Calcutta Local Head Office of the Bank will be held at the Calcutta Local Head Office, 3, Strand Road, Calcutta, on Monday, the 24th day of August 1936, at 10 a.m. (Calcutta time), for the purpose of electing two persons to be members of the Local Board to fill the vacancies caused by the retirement of Mr. H. H. Burn and Mr. G. B. Morton, M.C., who go out of office at such meeting, but, being eligible, offer themselves for re-election.

By order,

H. J. FITZ-PATRICK,

Secretary and Treasurer (offg.).

Calcutta, the 23rd July 1936. (1503—1)

Ghosh and Ray.

THE public are hereby informed that the partnership carried on by Mr. S. N. Ghosh and Mr. K. Ray under the name of Ghosh and Ray has been dissolved as from the 1st of April 1936.

SAILENDRA NATH GHOSH.

11, Dover Lane, Calcutta, the 23rd July 1936.

(1542—1)

British International Machine Traders.

THE public are hereby informed that the partnership carried on by Mr. Sailendra Nath Ghosh, Mr. Karunamay Ray and Dr. Sunil Krishna Sircar under the name of British International Machine Traders has been dissolved from the 16th of April 1936 and the goodwill, assets and liabilities of the said firm have been taken over by Mr. Anil Krishna Sircar of No. 15-1, Issur Mill Lane, Calcutta, as from the said date.

SAILENDRA NATH GHOSH.

11, Dover Lane, Calcutta, the 23rd July 1936.

(1543—1)

Britannia Commercial House.

THE public are hereby notified that the business carried on in partnership by Mr. Sailendra Nath Ghosh and Mr. Dilip Kumar Gupta under the name of Britannia Commercial House has been dissolved as from the 23rd of July 1936.

SAILENDRA NATH GHOSH.

11, Dover Lane, Calcutta, the 23rd July 1936.

(1544—1)

Custom House Notice.

NOTICE is hereby given that whereas Messrs. G. C. Shaw & Co. have failed to meet the demand made for duty on 9 packages of Booth's Dry Gin marked G.C.S. Calcutta ex ss. "Maihar" and bonded at the Bengal Bonded Warehouse under warehousing bill of entry No. 101 of 17th June 1933, the said goods will be sold by auction on the 6th August 1936, at noon, in Messrs. Mackenzie Lyall & Co.'s sale room at No. 5, Mission Row, Calcutta, under the provisions of section 119 of the Sea Customs Act.

G. N. BOWER, Collector of Customs.

Custom House, Calcutta, the 21st July 1936. (1490—2)

BOARD OF REVENUE, BENGAL.

"A" Group—Wards Branch.

ORDER—No. 9770 W.

WHEREAS an application has been made by Raja Gopal Lal Roy Bahadur of Tajhat in the district of Rangpur, praying that he may be declared to be a disqualified proprietor for the purpose of managing his own estate and that his estate be brought under the management of the Court of Wards, under clause (*c*) of section 6 of the Bengal Court of Wards Act, IX (B. C.) of 1879, as amended by the Bengal Decentralisation Act, 1915 (Bengal Act V of 1915), the Court of Wards is pleased to declare that the said Raja Gopal Lal Roy Bahadur is a disqualified proprietor within the meaning of that section and that it is expedient in the public interest that the estate should be managed by the Court of Wards.

Under sections 7 and 35 of the said Act [Act IX (B. C.) of 1879] the Court of Wards also declares that it has decided to take under its charge the property of the disqualified proprietor abovenamed and it directs that possession be taken of such property on behalf of the said Court.

By order of the Court of Wards, Bengal,

S. BANERJEE, Secretary.

Calcutta, the 16th/17th July 1936.

(1500—1)

BOARD OF REVENUE, BENGAL.

"A" Group—Wards Branch.

ORDER—No. 9771 W.

UNDER section 27, Act IX (B. C.) of 1879, the Court of Wards hereby declares Srijut Bhairab Lal Roy, son of Raja Gopal Lal Roy Bahadur of Tajhat, in the district of Rangpur, to be a minor under clause (*b*) of section 6 of the Act.

Under section 35 of the said Act the Court of Wards also declares that it has decided to take under its charge the person and property of the minor abovenamed and it directs that possession be taken of such person and property on behalf of the said Court.

By order of the Court of Wards, Bengal,

S. BANERJEE, Secretary.

Calcutta, the 16th/17th July 1936.

(1501—1)

Re. Messrs. Prem Chand Manick Chand.

UNDER instructions from our client Babu Prem Chand Singhee carrying on business under the name and style of Prem Chand Manick Chand at No. 105, Old China Bazar Street, Calcutta, and also at Jamalpur and Iswarganj in the district of Mymensingh, notice is hereby given that Babus Tilak Chand Baid, Sanchilal Baid and Nemi Chand Baid have ceased to be the working partners of the firm abovenamed on and from Asadh Sudi 9 Sambut 1993 corresponding with the 29th day of June 1936, and our client is the only person who is entitled to realise the outstandings and get in the assets of the said firm.

Anyone dealing with the said persons shall do so at his own risk and responsibility and our client and his firm abovenamed will not be bound thereby.

G. C. CHUNDER & CO., Attorneys-at-Law and Attorneys for Messrs. Prem Chand Manick Chand.

6, Old Post Office Street, Calcutta, the 21st July 1936.

(1507—1)

Estate James Kennedy Bell, deceased.

PURSUANT to section 360 of Act XXXIX of 1925 and section 42 of Act XXVIII of 1866, the creditors and all persons interested in the estate of James Kennedy Bell, late an Assistant Engineer in the employ of the Bengal Nagpur Railway Co., Ltd., Garden Reach, Calcutta, who died at Adra, Bengal Nagpur Railway, on the 13th day of February 1936, and Letters of Administration to whose estate were granted by the High Court, Calcutta, on the 12th day of May 1936, are hereby required to submit particulars of their claims to the undersigned on or before the 31st day of August 1936, after which date the Administrator will distribute the assets, having regard only to the claims of which notice shall then have been received.

ORR DIGNAM & Co.,

Solicitors to the Administrator.

32, Dalhousie Square, South, Calcutta, 22nd July 1936.

(1496—1)

Notice under section 10A of the Court of Wards Act IX(B. C.) of 1879.

WHEREAS under sections 6(*c*), 7 and 35 of the Court of Wards Act, IX (B. C.) of 1879, as amended up to date, the Court of Wards has assumed charge of the property of (1) Babu Kshitish Chandra Rai Choudhuri, (2) Babu Harendra Narayan Rai Choudhury and (3) Babu Naresh Chandra Rai Choudhury of Bahin in the district of Dinajpur:

Notice is hereby given under section 10A of the said Act that all creditors having claims against the said proprietors or their immovable property are hereby required to submit the same in writing to the Collector of Dinajpur at his office at Dinajpur within six months from the date of publication of this notice.

Creditors are also hereby warned that claims not submitted as required by this notice are liable to be deemed to have been duly discharged.

N. MAJUMDER, *for* Collector.

Dinajpur, the 24th July 1936. (1538—1)

LICENSING BOARD, BENGAL.

Enforcement of Rule 40A of the Indian Electricity Rules, 1922, in Bengal.

EXAMINATIONS for Supervisors' Certificates of Competency and Electrical Workmen's Permits will be held during the first week of October 1936 at the Calcutta Technical School, 110, Corporation Street, Calcutta. The exact date will be notified later to applicants. Applications for admission to the examinations, in the prescribed form and with the prescribed fee, must reach the Secretary, Licensing Board, 1, Haris Mukherji Road, Elgin Road post office, Calcutta, on or before the 7th September 1936.

The prescribed forms and any other information may be obtained from the Secretary.

The Regulations governing the grant of Licenses to Contractors, Certificates of Competency to Supervisors and Permits to Electrical Workmen can be obtained from the Secretariat Book Depot, Writers' Buildings, Calcutta, on payment, the price being four annas.

P. C. SARKAR, Secretary.

Calcutta, the 21st July 1936.

Estate Henry Lawton, deceased.

PURSUANT to section 360 of Act XXXIX of 1925 and section 42 of Act XXVIII of 1866, the creditors and all persons interested in the estate of Henry Lawton, formerly of the Sutikdih Colliery, Pathardih post office, Manbhoom, but late of the Bhulanbararee Colliery, district Manbhoom, Colliery Manager, who died at Loyabad, sub-district Dhanbad, district Manbhoom, on the 30th day of January 1936, and Letters of Administration to whose estate were granted by the High Court, Calcutta, on the 7th day of July 1936, are hereby required to submit particulars of their claims to the undersigned on or before the 30th day of August 1936, after which date the Administrator will distribute the assets, having regard only to the claims of which notice shall then have been received.

ORR, DIGNAM & CO., Solicitors to the Administrator.

32, Dalhousie Square, South, Calcutta, 20th July 1936.

(1485—1)

IN THE HIGH COURT OF JUDICATURE AT FORT WILLIAM IN BENGAL.

Ordinary Original Civil Jurisdiction.

In the matter of the Indian Companies Act
and
In the matter of Kisherilal Chowdhury's Bhutnath Office, Limited.

NOTICE is hereby given that a petition for the voluntary winding up of the abovenamed Company subject to the supervision of the High Court of Judicature at Fort William in Bengal was on the 20th day of July 1936 presented to the said Court by the said Company through its liquidator and that the said petition is directed to be heard before the Court on the 10th day of August 1936, and any creditor or contributory of the said Company desirous of opposing an order for the winding up of the said Company under the above Act should appear at the time of hearing by himself or his attorney or advocate for that purpose, and a copy of the petition will be furnished to any creditor or contributory of the said Company requiring the same, by the undersigned, on payment of prescribed charge for the same.

Dated this 20th day of July 1936.

M. K. ROY CHOWDHURI,

Attorney for the petitioner Company,
7, Old Post Office Street, Calcutta.

Note.—Rule 41 provides that any person who intends to appear on the hearing of the said petition must serve on or send by post to the abovenamed notice in writing of his intention so to do. The notice must state the name and address of the person, or if a firm, the name and address of the firm, and must be signed by the person or firm, or his or their attorney (if any), and must be served, or if posted, must be sent by post in sufficient time to reach the abovenamed not later than two clear days before the 10th day of August 1936.

(1537—1)

IN THE HIGH COURT OF JUDICATURE AT FORT WILLIAM IN BENGAL

Ordinary Original Civil Jurisdiction.

In the matter of the Indian Companies Act
and
In the matter of Madan Theatres, Limited.

NOTICE is hereby given that a petition for winding up the abovenamed Company by the High Court of Judicature at Fort William in Bengal was on the 20th day of January 1936 presented to the Court by Ghanshyamdas Goenka, Sir Badridas Goenka, Kt., C.I.E., and Jagmohan Prosad Goenka, all of No. 145, Muktaram Babu Street, Calcutta, creditors of the said Company, and that the said petition is directed to be heard before the Court on the 17th day of August 1936 and any creditor or contributory who is desirous of opposing the order for the winding up of the said Company under the above Act should appear at the time of the hearing of the application by himself or his attorney or advocate for that purpose and a copy of the petition will be furnished to any creditor or contributory of the said Company requiring the same by the undersigned on payment of the prescribed charge for the same.

Dated this 23rd day of July 1936.

CHARU CHANDRA BOSU,

Attorneys for the petitioners,
9, Old Post Office Street,
Calcutta.

Note.—Rule 41 provides that any person who intends to appear at the hearing of the said petition must serve on or send by post to the abovenamed a notice in writing of his intention so to do. The notice must state the name and address of the person or, if a firm, the name and address of the firm, and must be served or, if posted, must be sent by post in sufficient time to reach the abovenamed not later than two clear days before the 17th day of August 1936

(1541—1)

In the matter of the Indian Companies Act (Act VII of 1913)

and

In the matter of the Bagda Farm, Ltd.

(In voluntary liquidation for reconstruction and amalgamation with the Bagda Sugar Mills, Ltd., under section 213 of the Indian Companies Act of 1913.)

NOTICE is hereby given in pursuant to section 209 of the Indian Companies Act (Act VII of 1913) that a meeting of the creditors of the above Company will be held at 29, Strand Road (first floor), Calcutta, on the 2nd of August 1936, at 3-30 p.m.

CHARU CHANDRA CHATTERJI, Liquidator.

29, Strand Road, Calcutta, the 13th July 1936.

(1546 -1)

In the matter of the Indian Companies Act, 1913,

and

In the matter of V. Damoder (Calcutta), Ltd. (In voluntary liquidation).

NOTICE is hereby given that by an extraordinary resolution passed in the extraordinary general meeting of the shareholders of the above Company held on the 14th July 1936, it is resolved to wind up the Company voluntarily and Mr. J. Damoder is appointed liquidator to wind up the affairs of the Company.

J. DAMODER, Director.

13, Ezra Street, Calcutta, the 27th July 1936.

(1549- 1)

In the matter of the Indian Companies Act, 1913,

and

In the matter of V. Damoder (Calcutta), Ltd. (In voluntary liquidation).

NOTICE is hereby given that the meeting of the creditors of the above Company shall be held on the 11th August 1936 at the registered office of the Company at No. 13, Ezra Street, Calcutta, at 2 p.m.

J. DAMODER, liquidator.

13, Ezra Street, Calcutta, the 27th July 1936. (1550—1)

Imperial Library.

Secretariat Buildings, 6, Esplanade East, Calcutta.

Open on—

Week days and Saturdays from 10 a.m. to 7 p.m. Sundays and Gazetted holidays from 2 p.m. to 5 p.m.

THE Imperial Library is also a Lending Library. It is free to all except children. There is no subscription to pay.

K. M. ASADULLAH, Librarian.

CINCHONA FACTORY PRODUCTS.

By order of the Government of Bengal Cinchona Factory Products as manufactured and packed at the Cinchona Factory, Mungpoo, Darjeeling district, will be sold and distributed by the Superintendent of the Presidency Jail, *in original packages* as received from the Mungpoo Factory, at the rates herein noted from the 1st May 1926 :—

Name of drug.	Price per lb. in powder form. Taken at a time. For 60 lbs. and upwards.	For 6 lbs. and over but less than 60 lbs.	For any quantity less than 6 lbs.	Price in 5 grain tablets. 1,000 tablets.	500 tablets.	250 tablets.	Price by weight per lb.
	Rs.	Rs.	Rs.	Rs.	Rs. a.	Rs a.	Rs.
Quinine Bisulphate ..	18	19	20	16	8 0	4 4	..
„ Hydrobromide ..	23	24	25	20	10 0	5 4	..
„ Bihydrobromide ..	26	27	28	23	11 8	6 0	..
„ Salicylate ..	24	25	26	..	..	..	..
„ Tannate ..80 per cent. 35 per cent.	14	15	16	..	..	..	14

N.B.—Packing free in tins, sizes 1 lb., 8 oz. and 4 oz. only. Packing in bottles or smaller sizes of tins extra.

Quinine Sulphate.

For 60 lbs. and upwards at a time .. Rs. 18 per lb.
For 6 lbs. and over but less than 60 lbs. at a time .. .. .. „ 19 „
For any quantity less than 6 lbs. .. „ 20 „

Totaquina.

Irrespective of quantity .. Rs. 13-8 per lb.
For sale to hospitals and dispensaries in Bengal, Bihar, Orissa and Assam.

Quinine Hydrochloride.

For 60 lbs. and upwards at a time .. Rs. 23 per lb.
For 6 lbs. and over but less than 60 lbs. at a time .. .. .. „ 24 „
For any quantity less than 6 lbs. .. „ 25 „

Quinine Di-Hydrochloride.

For 60 lbs. and upwards at a time .. Rs. 25 per lb.
For 6 lbs. and over but less than 60 lbs. at a time .. .. .. „ 26 „
For any quantity less than 6 lbs. .. „ 27 „

Quinidine Sulphate.

For 60 lbs. and upwards at a time .. Rs. 20 per lb.
For 6 lbs. and over but less than 60 lbs. at a time .. .. .. „ 21 „
For any quantity less than 6 lbs. .. „ 22 „

Cinchonidine Sulphate.

For 60 lbs. and upwards at a time .. Rs. 25 per lb.
For 6 lbs. and over but less than 60 lbs. at a time .. .. .. „ 26 „
For any quantity less than 6 lbs. .. „ 27 „

Cinchonine Sulphate.

For 60 lbs. and upwards at a time .. Rs. 12 per lb.
For 6 lbs. and over but less than 60 lbs. at a time .. .. .. „ 13 „
For any quantity less than 6 lbs. .. „ 14 „

*Cinchona Febrifuge (Powder).

For 60 lbs. and upwards at a time .. Rs. 9 per lb.
For 6 lbs. and over but less than 60 lbs. at a time .. .. .. „ 9 „
For any quantity less than 6 lbs. .. „ 10 „

*Cinchona Febrifuge (Tablets).

For 60 lbs. and upwards at a time .. Rs. 10 per lb.
For 6 lbs. and over but less than 60 lbs. at a time .. .. .. „ 10 „
For any quantity less than 6 lbs. .. „ 11 „

Supply of Cinchona Febrifuge to all authorised indentors will be rationed in the proportion of 1½ of Cinchona Febrifuge to 1 of Quinine Sulphate at their existing prescribed prices.

Cinchona Bark (in 50 pound original bags).

Per bag .. .. .. Rs. 25.

4 grains Quinine Tablets.

Rs. a.
2 8 per box of 200 tablets (for Bengal and other provinces).
12 1 per 5 boxes—(Transit charges inclusive) for Public in Bengal.
15 8 per lb.

5 grains Quinine Tablets.

Rs. a.
15 8 per lb. sold in 1 lb., ½ lb. and ¼ lb. tins.

5 grains Quinine Hydrochloride Tablets.

Rs. a.
20 0 per 1,000 tablets.
10 0 „ 500 „
5 4 „ 250 „

Packing free in tins, sizes 1 lb., 8 oz. and 4 oz. only. Packing in bottles or smaller sizes in tins extra.

5 grains Quinine Bihydrochloride Tablets.

Rs. a.
22 0 per 1,000 tablets.
11 0 „ 500 „
6 0 „ 250 „

Packing free in tins, sizes 1 lb., 8 oz. and 4 oz. only. Packing in bottles or smaller sizes in tins extra.

Transit charges extra in every case.

Cinchona Febrifuge** is for sale to Government and Charitable Institutions, Local Bodies and Missionaries only. **It is not for sale to Private Firms or the General Public.

Quinine Sulphate is now open for sale to the Public at the above rates. But it will be supplied to Hospitals and Dispensaries in Bengal, Bihar, Orissa and Assam at Rs. 18 per pound irrespective of quantities.

Five and ten boxes of Quinine Tablets are sold to the public at the concession rates which will be intimated on application.

Provinces other than Bengal, Bihar, Orissa and Assam will get their supplies of Sulph. Quinine and Cinchona Febrifuge Powder and Tablets from the Director, Botanical Survey of India, Sibpur, Howrah.

Local sale at the jail gate from 10 to 12 noon.

The system of payment is by—*Cash in advance*—by "*Treasury Challans,*" which should accompany the order or indent.

In cases where this is not possible, payment should be made by "*Remittance Transfer Receipts*" or crossed "*Cheques.*"

Indents unaccompanied by cash in advance will be sent Value Payable Post. Credit sale is not allowed except under special circumstances.

In the case of *Government officers* payments will be recovered by *Book Transfer, i.e., Countersigned Invoices,* in the event of *Cash* not accompanying the indent by "*Treasury Challans,*" *Remittance Transfer Receipt or Cheque.*

2. Price and postage must accompany the price of the drug (when the drug is required by post).

The name of the Railway and Steamer Station or Post Office must be written distinctly when the parcels are required by Rail, Steamer or by Post. Railway parcels are sent by passenger train only.

A scale of postage is given below.

	1 oz.	2 ozs	4 ozs.	½ lb.	¾ lb.	1 lb.
	As.	As.	As.	As.	As.	Rs. A.
Quinine Sulph. ..	..	..	7	7	11	0 11
Cinchona Feb. ..	..	..	7	7	11	0 11
Cinchona Feb. Tablets	..	..	7	7	11	0 11
Quinine Hydrochlor. ..	5	5	7	7	..	0 11
Quinine Di-hydrochlor.	5	5	7	7	..	0 11
Quinine Tablets ..	..	..	7	7	11	0 11
Totaquina ..	..	..	7	7	11	0 11

	1¼ lb.	2 lb.	3 lb.	4 lb.	5 lb.	6 lb.
	Rs. A.	Rs. A.	Rs. A.	Rs. A.	Rs. A.	Rs. A.
Quinine Sulph. ..	0 15	1 3	1 7	1 15	2 7	2 15
Cinchona Feb. ..	0 15	0 15	1 7	1 11	1 15	2 7
Cinchona Feb. Tablets	1 3	1 3	1 11	1 15	2 7	2 15
Quinine Hydrochlor. ..	1 1	0 15	1 7	1 11	..	..
Quinine Di-hydrochlor.	1 1	0 15	1 13	2 5	..	..
Quinine Tablets ..	0 15	0 14	1 7	1 11	1 15	2 3
Totaquina ..	0 15	1 3	1 7	1 15	2 7	2 15

Two different drugs are not packed in the same parcel and postage must be paid separately for each kind.

N.B.—Postage stamps are not accepted as revenue.

Government reserve the right to alter the price without notice.

Government Publications for Sale

At the Bengal Government Press (Publication Branch)

Sales Office, Writers' Buildings, Calcutta.

Customers in the United Kingdom and the Continent of Europe may obtain the publications either direct from the High Commissioner's Office or through any book-seller.

NOTICE—Books required for private use can be purchased. Applications should be accompanied by remittance in each case.

All remittances on account of subscriptions to or enquiries regarding prices of Gazettes, Indian Law Reports or other Government publications available for sale should be addressed to the Superintendent, Government Printing, Bengal Government Press, Alipore. Advices of remittances should be sent to the same address.

Remittances on account of advertisements in official publications should be addressed to Accountant, Bengal Secretariat.

All remittances must include postal and packing charges which are shown in parentheses against each item in the list below.

All advertisements intended for publication in the *Calcutta Gazette* should be sent direct to the Superintendent, Government Printing, Bengal Government Press, Alipore, 24-Parganas.

Books required for the public service should be obtained through the Heads of Departments.

New Publications issued during the Current Quarter.

Legislative Council Proceedings.

For the meetings held on the 13th, 14th, 16th to 20th, 23rd to 27th and 30th March 1936. Vol. XLVIII, No. 2 Rs. 2-3 (1½a.).

Acts.

Bengal Police Act (Bengal Act VII of 1869) as modified up to 1st May 1936. A. 1 (9p.).

Miscellaneous Publications.

Administration. Annual—Reports for Establishment, Buildings, Railways and Communications, 1934-35. As. 6 (1a.).

Agriculture. Annual Report of the Department of—, Bengal, 1934-35. Part I. As. 4. (1¼a.).

Crop. Season and—Report of Bengal, 1935-36. As. 4 (1¼a.).

Dispensaries. Triennial Report on the Working of Hospitals and—under the Government of Bengal, 1932—34. Rs. 2 (6a.).

Health. Bengal Public—Report. 1934. Re. 1 (6a.).

Reports of the—Departments of the Ports of Calcutta and Chittagong. 1935. As. 4 (9p.).

Registration. Statistical Returns with a Brief Note of the—Department in Bengal, 1935. As. 3 (1¼a.).

Smoke Nuisances. Thirtieth Annual Report of Bengal—Commission. 1935. A. 1 (9p.).

Statistics. Agricultural—of Bengal, 1934-35. As. 6 (2¼a.).

Survey. Annual Report on the—and Settlement Operations in Bengal, 1934-35. Rs. 3 (4¾a.).

Veterinary. Annual Reports of the Civil—Department, Bengal, and of Bengal—College, 1934-35. As. 4 (1¼a.).

Publications issued between 1st January and 30th June 1936.

Legislative Council Proceedings.

For the meetings held on the 25th to 29th November, 2nd to 7th and 9th to 12th December 1935, Vol. XLVII, No. 1. Re. 1-14 (9¾a.).

For meetings held on the 13th, 14th and 16th to 20th December 1935. Vol. XLVII, No. 2. Re. 1-4 (6¼a.).

For the meetings held from 12th to 14th, 17th, 24th, 26th, 27th and 28th February and 2nd and 9th March 1936. Vol. XLVIII, No. 1. Re. 1-6 (7¾a.).

Acts.

Bengal Development Act (Bengal Act XVI of 1935). A. 1 (9p.).

Bengal Alluvial Lands Act (Bengal Act V of 1920) as modified up to 1st June 1935. A. 1 (9p.).

Bengal Village Self-Government Amendment Act (Bengal Act VIII of 1935), in Bengali A. 1 (9p.).

Bengal Village Self-Government Temporary Provision Act (Bengal Act XX of 1935), in Bengali. A. 1 (9p.).

Bengal Land Registration Amendment Act (Bengal Act III of 1936). A. 1 (9p.).

Bengal Development Act (Bengal Act XVI of 1935), in Bengali. As. 4 (9p.).

Bengal Court of Wards Amendment Act (Bengal Act VI of 1936). A. 1 (9p.)

Bengal Alluvial and Diluvial Amendment Act (Bengal Act IX of 1936). A. 1 (9p.).

Bengal Wakf Amendment Act (Bengal Act IV of 1936), in Bengali. A. 1 (9p). In Urdu. A. 1 (9p.).

Bengal Village Self-Government Act (Bengal Act V of 1919) as modified up to 1st August 1935. As. 2 (1½a.).

Bengal Agricultural Debtors' Act (Bengal Act VII of 1936), in Bengali. As. 4 (1½a.).

Bengal Whipping Act (Bengal Act X of 1936). A. 1 (9p.).

Bengal Municipal Amendment Act (Bengal Act XI of 1936). A. 1 (9p.).

Bengal Agricultural Debtors' Act (Bengal Act VII of 1936). A. 1 (9p.).

Calcutta Suburban Police Act (Bengal Act II of 1866) as modified up to 1st June 1930. As. 8 (1½a.).

Court-fees Bengal Third Amendment Act (Bengal Act I of 1936). A. 1. (9p.).

Calcutta Municipal Second Amendment Act (Bengal Act II of 1936). A. 1 (9p.).

Calcutta Municipal Amendment Act (Bengal Act VIII of 1936). A. 1. (9p.).

Calcutta Municipal Second Amendment Act (Bengal Act XII of 1936). A. 1 (9p.).

Howrah Bridge Amendment Act (Bengal Act V of 1936). A. 1 (9p.).

Indian Stamp Act (Reprint of I. C. Act II of 1899) as modified up to 1st January 1936. As. 4 (2½a.).

Miscellaneous Publications.

Accountantship. Examination papers for 1936. A. 1 (9p).

Administration. Report on the—of Bengal, 1934-35. Re. 1-8 (7½a.).

Advisory Committee. Final Report of the Provincial—on the Delimitation of Constituencies, 1935. As. 4 (1½a.).

Agriculture. Annual Report of the Department of—, Bengal, 1934-35. Part II. Re. 1-4 (5½a.).

Apprenticeship. Questions for the—Training Examination, 1936. As. 8 (1a.).

Audit. Annual Report on the working of Local—Department, 1933-34. As. 3 (1½a.).

Budget. Civil—Estimate, 1936-37. Rs. 2 (11½a.).

P. W. D.—Estimate of 60—Civil Works not charged to Revenue in Bengal, 1936-37. A. 1 (9p.).

P. W. D.—Estimate of Provincial Civil Works in Bengal, 1936-37. As. 4 (2½a.).

Bulletin (Agriculture Department). No. 1 of 1921. A Brief History of Experimental Cotton Cultivation in the Plains of Bengal, 1935. As. 2 (9p.).

No. 2 of 1921. Historical Notes on Experiments with Jute in Bengal, 1935. As. 4 (9p.).

No. 66. Report on the Industrial Survey of the District of Pabna, 1934. As. 12 (2½a.).

No. 63. Handbook of Tanning. Rs. 2-8 (7½a.).

Chronological Tables, 1936. A. 1 (9p.).

Classified List and Distribution Return of Establishment of Roads and Buildings, corrected up to 1st January 9136. As. 9 (1½a.).

Co-operative. Annual Report on the working of—Societies in Bengal, 1935. As. 10 (3½a.).

Constables. Major Chamney's Manual for Instruction of—in their Duties, in Hindi. As. 12 (3½a.).

Electoral. Bengal—Orders and Rules, 1936. As. 4 (2½a.).

Electricity. Regulations under Rule 40A of the Indian Rules, 1922. Published 1936. As. 4 (9p.).

Electrical Energy. Report of the Committee appointed to enquire into the charges for—levied by the Calcutta Electric Supply Corporation, Ltd., 1936. Rs. 2-8 (9½a.).

Excise. Report on the Administration of—Department in Bengal, 1934-35. Re. 1-2 (2½a.).

Factories. Abstract of the—Act, 1934, and Bengal—Rules, 1935. As. 2 (9p.).

Abstract of the—Act, 1934, and Bengal—Rules, 1935, in Bengali. As. 2 (9p.).

Abstract of the—Act, 1934, and Bengal—Rules, 1935, in Hindi. As. 2 (9p.). Nepali. As. 2 (9p.).

Cotton Ginning and Pressing—Rules, 1925. Published 1936. As. 4 (9p.).

Forest (s). Annual Progress Report on—Administration in Bengal, 1934-35. Re. 1 (3½a).

The—of Bengal, 1935. Rs. 3 (4½a.).

High Court. Rules of the—Appellate Side, 7th edition, 1936. Re. 1-8 (7½a.).

Rules from Civil Rules and Orders of—regarding the Service of Processes in Bengal, 1936. As. 4 (1½a.).

Industries. Annual Administration Report of the Department of—, Bengal, 1934-35. As. 6 (2½a.).

Irrigation Department. Classified List and Distribution Return of Establishment of the—, corrected up to 1st January 1936. As. 12 (1½a.).

Justice. Report on the Administration of Civil—in Bengal, 1934. As. 15 (3½a.).

Legislation. Effect of—List for 1934. A. 1 (1½a.).

List of Members of the Bengal Legislative Council, etc., 24th list, dated the 16th January 1936. As. 5 (1½a.).

Of members of the Bengal Legislative Council, etc., 25th list, dated the 25th April 1936. As. 5 (1½a.).

Medical College. Annual Report on the Working of the—, Calcutta, 1934-35. As. 8 (1a.).

Physical Education. Suggestions for the Improvement of—in Schools, 1936. As. 5 (1½a.).

Public Health. Annual Report of the Chief Engineer,—Department, Bengal, 1934. As. 8 (1a.).

Schools. Syllabuses of Studies for Secondary—for Boys and Girls in Bengal, 1936. As. 4 (1½a.).

List of High—and Colleges in Bengal corrected up to 31st December 1935. As. 2 (1½a.).

Steam-vessels. List of Inland—and Motor—plying in Bengal, Bihair and Orissa corrected up to 31st December 1935. Re. 1-3 (1a.).

Survey. Bengal—and Settlement Manual, 1935, Re. 1-2 (12½a.).

Tenancy. Terms and conditions on which applications under section 158A of the Bengal—Act may be allowed by Government, 1935. A. 1 (9p.).

Tenderers. Instructions for the Guidance of—of Calcutta Police Uniform, 1936. Rs. 3 (1½a.).

Tobacco. Bengal—(Sales Licensing) Rules, 1935. A. 1 (9p.).

Trade Union. Report on the working of the Indian—Act in Bengal for the year ending 31st March 1935. As. 8 (1a.).

Wards. Report on the Administration of the—, Attached and Trust Estates in Bengal, 1934-35. As. 11 (2½a.).

Waste Lands. Bengal—Manual, 1936. Re. 1 (4½a.).

Registered No. C207

No. 31 of 1936

The Calcutta Gazette

THURSDAY, JULY 30, 1936.

CONTENTS:

	PAGE.		PAGE.
Forecast of the Summer *Til* (Sesamum) Crop of Bengal, 1936-37	1057—1059	Weather and Crop Report for the week ending 22nd July 1936	1061—1064
Statements of weekly gauge-readings on certain rivers in Bengal	1060 & 1069	Prices-current (wholesale and retail) of Food-grains, Salt, etc., in the districts of Bengal for the first half of July 1936 ..	1065—1068
Statement under the Cotton Ginning and Pressing Factories Act, 1925 ..	1060	Vital Statistics of towns of Bengal for the week ending 18th July 1936 ..	1070

SUPPLEMENT.

Official Papers.

DEPARTMENT OF AGRICULTURE, BENGAL.

Dacca, the 23rd July 1936.

Forecast of the Summer Til (Sesamum) Crop of Bengal, 1936-37.

(*Note.*—On an average of the five years ending 1933-34, the area under *til* in Bengal has represented some 2·4 per cent. of the total area under *til* in British India.)

Character of the season.—At the outset defective rainfall interfered with progress of sowings in parts of West and North Bengal. Elsewhere the operation was carried on under favourable conditions. Subsequent conditions were generally satisfactory for germination and growth. Some damage was, however, caused by heavy rain in Jessore, Khulna, Pabna, Dacca and Bakarganj.

Acreage.—The area sown this year is estimated at 131,800 acres as against 115,200 acres last year.

Outturn.—From the District Officers' estimates the average outturn of the crop for the province works out at 81 per cent. of the normal this year as against the same estimate last year.

Taking the normal yield as 7⅞th maunds per acre, the gross outturn of the crop for the province is estimated at about 29,000 tons this year as against 25,400 tons last year.

K. McLEAN,

Director of Agriculture, Bengal.

APPENDIX I.

Forecast of the Summer Til Crop of Bengal, 1936-37.

District.	Estimated normal area under summer til.	Estimated area under summer til.		Taking 100 to represent the normal, what would be the average outturn per acre cropped.		Date by which sowing generally began this year and whether that date was early, normal or late.	Date by which harvesting generally commenced this year and whether that date was early, normal or late.	Remarks by District Officers.
		Last year.	This year.	Last year.	This year.			
1	2	3	4	5	6	7	8	9
	Acres.	Acres.	Acres.					
24-Parganas ..	100	..	..	..	..	....	....	....
Nadia ..	100	400	400	50	58	Middle of March. Normal	Middle of June Normal.	Some damage was done for want of rain. Hence the outturn is below the normal
Murshidabad ..	2,400	200	2,700	33	67	Early March. Normal	Early June Normal.	Large increase in area is due to extension of cultivation in Kandi subdivision. Some damage was caused by drought in Sadar and Lalbagh subdivisions. Hence the outturn is below the normal.
Jessore ..	900	800	900	66	65	March. Normal	May and June Normal.	The outturn fell below the normal on account of some damage caused by excessive rain.
Khulna ..	1,000	900	1,000	92	83	First week of January Normal.	First week of June Normal.	The weather was fair at sowing time, but unfavourable afterwards The outturn is below the normal owing to heavy rain at the time of harvest.
Burdwan ..	900	100	300	31	75	Middle of March Normal.	Early June. Normal.	The increase in area is due to timely rainfall. The weather was fair.
Birbhum ..	500	600	500	83	83	Early March. Normal	Middle of June Normal.	The decrease in area is due to want of rainfall and of water in irrigation tanks. The weather was fair.
Bankura ..	2,700	2,700	1,800	75	75	January and February. Normal.	June. Normal	The decrease in area is due to prolonged drought. Owing to drought damage was done to some extent. Hence the outturn is below the normal.
Midnapore ..	7,500	1,200	1,000	67	67	March. Normal	Ditto.	Want of rain at the sowing time hampered the cultivation and growth of the crop. Hence the outturn is much below the normal.
Hooghly ..	100	100	100	67	58	First week of March. Late.	First week of June. Late.	Damage was done to the extent of 5 annas owing to insufficient rain.
Rajshahi ..	6,400	8,400	7,900	75	77	February and March A little late.	June to July. A little late.	Damage was done to the extent of 3 annas due to drought; hence the outturn fell below the normal.
Dinajpur ..	200	400	400	85	85	Early March. Normal	Early June. Normal.	The weather was fairly favourable.
Rangpur ..	200	200	200	100	100	End of February Normal.	Middle of June. Normal.	The weather was favourable.
Bogra ..	900	2,000	1,000	85	80	February and March.	June ..	The decrease in area is due to increase in area under jute. The weather was, on the whole, fairly favourable.
Pabna ..	28,000	21,300	22,100	75	75	Middle of February in Serajganj and first week of April in Sadar. Normal	Middle of May in Serajganj and middle of July in Sadar. Normal.	Some damage was done to the crop in some tracts due to early floods, hence the outturn was below the normal.

District.	Estimated normal area under summer til.	Estimated area under summer til.		Taking 100 to represent the normal, what would be the average outturn per acre cropped.		Date by which sowing generally began this year and whether that date was early, normal or late.	Date by which harvesting generally commenced this year and whether that date was early, normal or late.	Remarks by District Officers.
		Last year.	This year.	Last year.	This year			
1	2	3	4	5	6	7	8	9
	Acres.	Acres	Acres					
Dacca ..	12,100	17,100	16,400	91	85	End of February. Normal.	June Normal	The decrease in area is due to unfavourable weather at sowing time. Some damage was caused by drought and use of water. Hence the outturn is below the normal.
Mymensingh ..	44,400	31,700	31,700	70	75	Last part of March Normal	Middle of June Normal	The weather was fair
Faridpur ..	8,500	10,400	11,900	92	100	First week of February Normal.	Last week of May. Normal	The increase in area is due to propaganda for extension of cultivation of *rabi* crops. The weather was favourable
Bakarganj ..	6,500	7,500	22,000	110	85	February to April Little late	Latter part of May to first part of June Little late	The increase in area is due to favourable weather at sowing time. The weather was favourable at sowing season, but subsequently owing to heavy rainfall and flood the crop was damaged and consequently the outturn is low the normal
Chittagong ..	200	240	900	90	80	January to March Normal	June Normal	The weather was fairly favourable
Tippera ..	3,800	8,600	8,400	92	92	Early March Normal	Ditto ..	The weather was favourable.
Noakhali ..	1,300	1,000	900	50	60	Middle of March to early April Normal	End of June. Normal	The decrease in area is due to unfavourable weather at the sowing time and also to increase in area under sugarcane
Total Bengal ..	128,700	115,200	131,800	81	81			

APPENDIX II.

Abstract statement of estimated acreage and outturn of the Summer Til Crop of Bengal, 1936-37.

Province	Area (in acres).						Yield (in tons).					
	Of current year's crop	Of previous year's crop	Average of preceding—		Percentage by which column 2 exceeds (+) or is less than (−) area in		Estimated yield of current year's crop of area in column 2.	Yield of previous year, i.e., of area in column 3.	Average of preceding—		Percentage by which column 7 exceeds (+) or is less than (−) yield in	
					column 3	column 4.					column 8	column 9.
1	2	3	4		5	6	7	8	9		10	11
			Five years	Ten years		Five years	Ten years			Five years.	Ten years		Five years	Ten years.
Bengal ..	131,800	115,200	107,100	105 900	+14 4	+23 1	24·4	22 000	25 400	20 700	18 100	+14 2	+40 1	+60 2

Statement of weekly gauge readings on the river Ganges at Rampur Boalia for the week ending the 18th July 1936.

Date.	Hour.	Height of surface above P. W. D. datum.	Height of surface above P. W. D. datum on the same date last year.	Remarks.
1936.				Value of B. M. on Rajshahi College step; —64·73 P. W. D. Zero of gauge = 0·60 P. W. D.
12th July	7 a.m.	55·25	46·89	
13th „	7 „	55·90	46·99	
14th „	7 „	56·40	47·39	
15th „	7 „	56·60	48·99	
16th „	7 „	56·55	49·89	
17th „	7 „	56·85	49·90	
18th „	7 „	56·65	49·80	

Highest recorded level on 26-8-1879 64·24.
Lowest recorded level on 24-4-1931 =32·05.

S. GUPTA, *Subdivisional Officer,*
Irrigation Department, Rajshahi.

Rampur Boalia, the 19th July 1936.

FORM C—BENGAL.

STATEMENT OF COTTON PRESSED IN THE BENGAL PRESIDENCY FOR THE WEEK ENDING THE 17th JULY 1936.

[Section 5(2) of the Cotton Ginning and Pressing Factories Act, 1925.]

Name of Division or block.	Number of bales pressed.				District included in the block.
	During the week.	During the corresponding week last year.	Since 1st September 1935 (the date prescribed by the Local Government as the commencement of the season).	During the corresponding period last year.	
The Bengal Presidency	1,216 or 1,211·72 bales of 400 lbs. each.	1,412	61,8 9	41,485	All districts in the Presidency.

J. B. McBRIDE,
Chief Inspector of Factories, Bengal.

DISTRICT REPORTS ON WEATHER AND CROPS.

For the week ending on the 22nd July 1936.

Summary.—Excepting heavy showers in places the rainfall was generally light to moderate. Cultivation of winter paddy continues but more rain is needed in places. Harvesting of autumn crops is in progress. Prospects of standing crops are generally satisfactory. During the week ending Saturday, the 18th July, the number of persons receiving gratuitous relief was 4,767 in the distressed areas of Murshidabad, where test relief works have been closed. In 24-Parganas, Burdwan and Birbhum 248, 550 and 399 persons, repectively, were employed on test relief works on Saturday, the 18th July. In Nadia and Burdwan 2,615 and 2,200 persons also received gratuitous relief. In Hooghly 1,049 labourers were engaged on test relief works during the week ending Saturday, the 18th idem. The average price of common rice for the province has risen by about 0·13 per cent. as compared with that of the previous week.

Serial No.	District and sub-division.	Rainfall.	Price of common rice, in seers, per rupee.		Character of the weather, condition of crops, etc.
			This week.	Previous week.	
1	2	3	4	5	6
		Inches.			
1	24-Parganas ..	1·18	9 13/16	9 13/16	Weather seasonable. Fodder and water are sufficient. Import of rice continues from East Bengal in Basirhat. 248 persons were engaged on test relief works in Basirhat on the last day of the week ending the 18th July. Agricultural loans also gratuitous relief were distributed during the week in Sadar, Basirhat and Diamond Harbour. Condition of jute plants healthy in Basirhat but not satisfactory in Barrackpore. Some damage caused by insects. Height varies from 3½ to 5 feet. Harvesting not yet commenced. Steeping water ample in Barrackpore. Rainfall normal.
	Diamond Harbour..	1·45	10	9½	
	Barrackpore ..	1·22	8½	8½	
	Barasat ..	0·35	9	9	
	Basirhat ..	4·04	11	11	
2	Nadia ..	3·14	8½	8½	Weather seasonable. Agricultural operation is going on in full swing. Rice is being imported largely in Ranaghat. Fodder and water are sufficient. Cattle-disease is reported from Nabadwip police-station. Distribution of agricultural loan is being made in all subdivisions except Kushtia. Gratuitous relief was given to 174 persons in Sadar, 2,408 persons in Chuadanga and to 33 persons in Meherpur for the week ending 18th July 1936. Condition of jute plants not so healthy. Steeping water ample. Height of plants varies from 4 to 6 feet. River level 1 foot higher. Rainfall not excessive. Harvesting not yet commenced.
	Kushtia ..	1·86	10	10	
	Meherpur ..	0·45	11	11	
	Chuadanga ..	0·93	12	12	
	Ranaghat ..	0·62	9½	9½	
3	Murshidabad ..	1·15	10	10	Weather seasonable. Prospects of standing crops are favourable. Fodder and water are sufficient. Cattle-disease is reported from Kandi subdivision. No large import or export. Test relief works closed on the 11th July 1936. Number of perons receiving gratuitous relief in the distressed areas for the week ending Saturday, the 18th July, was 268, 3,304 and 1,195 in Lalbagh, Kandi and Jangipur subdivisions, respectively. Condition of jute plants healthy and growth satisfactory. No damage. Steeping water ample. Height of plants 3 to 4 feet. River level almost same as last year. Rainfall sufficient. Harvesting not yet commenced.
	Lalbagh ..	2·53	10½	10½	
	Jangipur ..	0·15	10½	10½	
	Kandi ..	0·70	9½	9½	
4	Jessore ..	0·28	11	11	Weather seasonable. Prospects of standing crops are fair No large export or import. Fodder and water are sufficient. Condition of jute plants fair and growth satisfactory. No damage. Steeping water sufficient. Height of plants varies from 3 to 3½ cubits. River level same as in last year. Rainfall moderate. Harvesting not yet begun.
	Jhenidah ..	1·19	13	13	
	Magura ..	0·30	13	13	
	Narail ..	1·27	10	10	
	Bongaon ..	1·18	10	10	
5	Khulna ..	1·07	10	10	Weather seasonable. Fodder and water are sufficient. Test relief works suspended. Condition of jute plants healthy. No damage. Steeping water ample. Height of plants varies from 4 to 6 feet. River level higher.
	Satkhira ..	0·88	10½	10½	
	Bagerhat ..	0·54	8½	8½	

Serial No.	District and sub-division.	Rainfall.	Price of common rice, in seers, per rupee.		Character of the weather, condition of crops, etc.
			This week.	Previous week.	
1	2	3	4	5	6
		Inches.			
6	Burdwan ..	1·36	9½	9½	Weather seasonable. Condition of crop is favourable. Fodder is sufficient. Cattle-disease is reported from Ausgram police-station. 550 labourers were engaged on test relief works on 18th July 1936. 2,200 persons received gratuitous relief. Condition of jute plants healthy. No damage. Steeping water sufficient. Height of plants nearly 4 cubits. River level lower. Rainfall not excessive.
	Asansol ..	6·08	11	11	
	Katwa ..	0·83	9	9	
	Kalna ..	0·37	8¾	8¾	
7	Birbhum ..	2·99	10	10	Weather seasonable and sultry. Prospects of standing crops are fair. Transplantation of winter paddy continues. Water is sufficient but there is scarcity of foddor. 399 persons were employed on test relief works on preceding Saturday.
	Rampurhat ..	4·05	10½	11	
8	Bankura ..	4·70	10	10	Weather hot and cloudy. Transplantation of paddy seedlings is in progress. Prospects of standing crops are good. Fodder and water are sufficient. Cattle-disease is reported from Indas, Raipur and Bankura thanas.
	Vishnupur ..	4·62	9	9	
9	Midnapore ..	3·64	10	10	Transplantation of winter paddy continues. Condition of jute plants is fair. Fodder and water are sufficient. Cattle-disease is reported from Daspur and Chandrakona police-stations.
	Contai ..	1·96	8	8	
	Tamluk ..	4·20	9	9	
	Ghatal ..	1·52	10½	11⅛	
	Jhargram ..	3·51	9	10	
10	Hooghly ..	0·91	9½	9½	Weather seasonable. Fodder and water are sufficient. The number of test work labourers for the week ending Saturday, the 18th July, was 1,049. Condition of jute plants healthy. About 4-anna damage caused by insects in Serampore. Steeping water ample. Height about 4 feet. Harvesting not yet commenced.
	Serampore ..	0·69	9½	9½	
	Arambagh ..	2·56	9½	9½	
11	Howrah ..	1·49	10	10	Transplantation of winter paddy continues in full swing. Fodder and water are sufficient. Condition of jute plants healthy. No damage. Height 4 feet on average. Rainfall moderate.
	Uluberia ..	4·57	9½	9½	
12	Rajshahi (Rampur-Boalia).	0·50	9⅝	9⅝	Weather seasonable. Condition of standing crops appears to be favourable. Weeding of jute and paddy has been over. Transplantation of paddy has already commenced. Fodder and water are sufficient. Cattle-disease exists in places of Nator subdivision. Condition of jute plants healthy and growth satisfactory. No appreciable damage. Steeping water available. Height 3 to 5 feet. River level much below. About 2-anna crops harvested.
	Naogaon ..	1·23	10½	10½	
	Nator ..	3·41	9½	9½	
13	Dinajpur ..	2·19	11	11	Weather seasonable. Fodder and water are sufficient. Cattle-disease is reported from Birganj and Thakurgaon thanas. Condition of jute plants healthy and growth satisfactory. No damage. Steeping water not ample. Height of plants 5 to 6 feet. River level much lower than last year. About 2-anna crops harvested.
	Thakurgaon ..	3·25	11	12	
	Balurghat ..	3·25	11½	11½	
14	Jalpaiguri ..	7·49	10	11	Weather hot. Fodder and water are sufficient. Condition of jute plants healthy and growth satisfactory. No damage. Steeping water sufficient. Height of plants 8 feet on average. Harvesting not yet commenced. Rainfall heavy.
	Alipur ..	9·63	10	11	

Serial No.	District and sub-division.	Rainfall.	Price of common rice, in seers, per rupee.		Character of the weather, condition of crops, etc.
			This week.	Previous week.	
1	2	3	4	5	6
		Inches.			
15	Darjeeling ..	9·85	8	8	Weather favourable. Transplantation of paddy and *marua* is in progress. Fodder and water are sufficient.
	Kurseong ..	19·21	8	8	
	Siliguri ..	10·51	10	10	
	Kalimpong ..	10·85	7	6½	
16	Rangpur ..	3·18	11½	11	Weather hot and dry. Prospects of standing crops are fair. More rain is very urgently needed. Transplantion retarded in some parts for want of sufficient rain. No large export or import. Fodder and water are sufficient. Cattle-disease is reported from Kishoreganj police-station.
	Nilphamari ..	1·39	11	11	
	Kurigram ..	2·27	10	11	
	Gaibandha ..	0·15	9	(*n*)	
17	Bogra ..	0·89	10½	10½	Cultivation of winter paddy continues. Prospects of standing crops are fair. *Aus* and jute are being harvested. Fodder and water are sufficient. Cattle-disease is prevalent in some places. Condition of jute plants satisfactory. No damage. Steeping water not sufficient. Height 4½ to 6 ft. River level lower than last year. About 2-anna crops harvested.
18	Pabna ..	0·37	10	10	Weather seasonable but more rain is wanted. Condition of standing crops is satisfactory. Flood water is rising. Harvesting of *aus* paddy and jute is in progress. Fodder and water are sufficient. Condition of jute crop healthy and growth satisfactory. No damage. Steeping water sufficient. Height of plants 6 to 7 ft. Harvesting 4-anna at Serajganj and 1 anna at Sadar.
	Serajganj ..	1·32	11½	11½	
19	Malda ..	1·22	10½	10½	Weather hot. Prospects of standing crops fair. Fodder and water available. Condition of jute plants healthy. No damage. Steeping water ample. Height about 7 feet. River level same as last year. Harvesting not yet commenced.
20	Cooch Behar ..	4·97	12½	13 $\frac{5}{16}$	Weather seasonable. Preparation of lands for winter paddy and rearing of seedlings in nursery and transplantation of the same continue. Prospects of standing crops are fair. Harvesting of autumn paddy and cutting and steeping of jute continues. Fodder and water are sufficient. Cattle-disease is reported from Sadar, Tufanganj and Dinhata subdivisions. Condition of jute plants satisfactory. No damage. Steeping water ample. About one anna crop harvested.
21	Dacca ..	1·66	10½	10½	Rainfall at North Sadar (Kapasia) 9·31. Weather seasonable and its effects on the agricultural operations are fair. Jute plants are generally healthy and their growth is satisfactory. Damage to the extent of about one anna by the sudden rise of water in Sadar and Narayanganj. Steeping water ample. Height of plants 4 to 7 ft generally. Rainfall normal. About 5-anna crops harvested. River level lower. Fodder and water are sufficient. Cattle-disease still exists.
	Manikganj ..	2·21	10⅝	10⅝	
	Narayanganj ..	1·57	12	12	
	Munshiganj ..	(*n*)	(*n*)	10½	

(*n*) Not reported.

Serial No.	District and subdivision	Rainfall.	Price of common rice, in seers, per rupee.		Character of the weather, condition of crops, etc.
			This week	Previous week	
1	2	3	4	5	6
		Inches			
22	Mymensingh ..	1·81	10	10	Weather seasonable. More rain is necessary Condition of crops is fair Fodder and water are available Condition of jute plants satisfactory except in Netrakona and Kishorganj Damage about 2 annas Steeping water ample Height 3 to 4 cubits River level lower than last year by 3 feet Rainfall normal About 3 anna crops harvested
	Jamalpur ..	0·75	10½	10½	
	Tangail ..	0 69	11	11	
	Netrakona ..	2·95	12	12½	
	Kishorganj .	3 90	10½	10½	
23	Faridpur ..	0 28	11½	11½	Weather seasonable Condition of standing crops is fair. Fodder and water are sufficient. Condition of jute plants fair Slight damage by insects in Goalundo subdivision Steeping water ample Height about 6 feet River level lower About 1-anna crop harvested
	Goalundo (Rajbari)	0·44	10½	10½	
	Madaripur ..	0 86	11	11½	
	Gopalganj (a) ..	1 18	12½	12	
24	Bakarganj (Barisal)	3 20	10½	10½	Weather seasonable Prospects of standing crops are good in Sadar and Bhola and fair in Pirojpur and Patuakhali Fodder and water are sufficient Cattle-disease is reported from South Circle of Bhola subdivision Condition of jute plants not healthy in low land and fair in high land. Appreciable damage done by drought first and subsequently by heavy rain. Steeping water sufficient Height about 2 to 7½ feet River level lower than last year About 2 to 3-anna crops harvested
	Pirojpur ..	0 59	9½	9½	
	Patuakhali ..	2·38	10½	10	
	Dakshin Shahazpur (Bhola).	2 25	10	(n)	
25	Chittagong .	0·04	10 11*	10 11*	Weather seasonable. Transplantation of *aman* and harvesting of *aus* crops continue Condition of standing crops not good for want of rain Fodder and water are sufficient Cattle disease is reported from places Panga salt sells at 14 seers at Sadar and 12 seers at Cox's Bazar.
	Cox's Bazar ..	1 39	11	11	
26	Tippera (Comilla) ..	2·40	10	10½	Weather seasonable. Prospects of crops are fair. Condition of jute plants fair. Damage about 2-anna owing to sudden overflow of water Steeping water not ample. Height about 7 feet. River level lower than last year Rainfall not excessive. About 4 anna crops harvested
	Brahmanbaria ..	4·28	10½	10½	
	Chandpur ..	1·95	11½	11½	
27	Noakhali ..	1·90	10½	10½	Weather seasonable. Condition of jute plants healthy A little damage due to excessive rain Steeping water ample Height 6 to 7 feet. River level a little below than last year About 2 anna crops harvested
	Feni ..	2·93	10½	10½	
28	Chittagong Hill Tracts.	2·26	11	11	Weather seasonable. Its effects are favourable Fodder and water are sufficient Cattle disease still prevails.
29	Tripura State ..	(n)	(n)	10	Reports not received

(a) The rainfall at Haridaspur, which is very near to Gopalganj, is shown here.

* Burma rice (n) Not reported

S. ABDULLAH, for *Director of Agriculture, Bengal*

Dacca, the 27th July 1936.

Wholesale prices-current of food grains, gur, etc., in the undermentioned marts of Bengal for the first half of July 1936.

Marts.	Paddy local (best quality).			Paddy local (common quality).			Rice local (best quality).		
	Present return.	Next preceding return.	Corresponding return of last year.	Present return.	Next preceding return.	Corresponding return of last year.	Present return.	Next preceding return.	Corresponding return of last year.
1	2	3	4	5	6	7	8	9	10
	Rs. a. p.	Rs. a. p.	Rs. a. p.	Rs. a. p.	Rs. a. p.	Rs. a. p.	Rs. a. p.	Rs. a. p.	Rs. a. p.
Calcutta	2 14 0	3 0 0	2 10 0	2 9 0	2 12 0	2 8 0	5 6 0	5 6 0	5 12 0
Burdwan	2 8 0	2 8 0	2 1 0	2 6 0	2 6 0	1 15 0	4 8 0	4 8 0	4 9 0
Midnapore	2 8 0	2 10 0	2 2 0	2 2 0	2 3 0	1 14 0	4 12 0	4 12 0	4 4 0
Chittagong	1 14 6	1 15 0	1 13 0	1 13 6	1 14 6	1 11 0	4 8 0	4 8 0	5 0 0
Dacca	2 8 0	2 8 0	2 8 0	2 4 0	2 2 0	2 5 0	4 4 0	4 2 0	4 2 0
Pabna	2 4 0	2 4 0	2 6 0	2 0 0	2 0 0	2 1 0	4 14 0	4 12 0	4 12 0
Rangpur	2 0 0	2 0 0	1 14 0	1 12 0	1 12 0	1 12 0	5 0 0	4 8 0	5 8 0
Serajganj (Pabna)	..	..	..	..	..	..	..	..	..
Sariabari (Mymensingh) ..	..	..	..	..	..	..	..	..	..
Narayanganj (Dacca)	..	..	..	..	..	..	..	..	..

Marts.	Rice local (common quality).			Wheat.			Raw cotton.		
	Present return.	Next preceding return.	Corresponding return of last year.	Present return.	Next preceding return.	Corresponding return of last year.	Present return.	Next preceding return.	Corresponding return of last year.
	11	12	13	14	15	16	17	18	19
	Rs. a. p.	Rs. a. p.	Rs. a. p.	Rs. a. p.	Rs. a. p.	Rs. a. p.	Rs. a. p.	Rs. a. p.	Rs. a. p.
Calcutta	4 12 0	4 14 0	4 8 0	3 9 0	3 5 6 to 3 6 6	3 4 3	22 12 0	21 12 0	17 4 0
Burdwan	4 2 0	4 2 0	3 9 0	..	..	..	..	..	..
Midnapore	3 12 0	3 12 0	3 5 6	..	..	..	..	..	..
Chittagong	3 12 0	3 10 0	3 12 0	..	..	..	..	..	..
Dacca	4 0 0	3 5 0	3 8 0	..	..	..	..	..	..
Pabna	4 2 0	3 13 0	3 10 0	..	..	..	..	..	..
Rangpur	4 1 0	4 0 0	3 12 0	..	..	..	..	..	..
Serajganj (Pabna)	..	..	..	..	..	..	..	..	..
Sariabari (Mymensingh) ..	..	..	..	..	..	..	..	..	..
Narayanganj (Dacca)	..	..	..	..	..	..	..	..	..

Marts.	Coal.			Raw jute (weighted average).			*Gur* (sugarcane).		
	Present return.	Next preceding return.	Corresponding return of last year.	Present return.	Next preceding return.	Corresponding return of last year.	Present return.	Next preceding return.	Corresponding return of last year.
	20	21	22	23	24	25	26	27	28
	Rs. a. p.	Rs. a. p.	Rs. a. p.	Rs. a. p.	Rs. a. p.	Rs. a. p.	Rs. a. p.	Rs. a. p.	Rs. a. p.
Calcutta	0 6 6	0 6 6	0 6 0	5 0 0	5 8 0	6 0 0	3 0 0	3 0 0	4 8 0
Burdwan	..	..	..	..	..	..	4 6 0	4 6 0	4 8 0
Midnapore	..	..	..	..	..	..	4 0 0	4 0 0	4 8 0
Chittagong	..	..	..	..	..	..	3 12 0	3 12 0	5 12 0
Dacca	..	..	..	..	..	..	3 12 0	3 14 0	5 8 0
Pabna	..	..	..	..	..	..	2 4 0	2 6 0	4 2 0
Rangpur	..	..	..	..	..	..	2 8 0 to 3 0 0	2 8 0 to 3 0 0	3 0 0 to 3 8 0
Serajganj (Pabna)	..	..	..	(a) 4 4 0	(a) 4 8 0	5 2 0 to 5 6 0	..	..	..
Sariabari (Mymensingh) ..	..	..	..	(a) 3 8 0 to 5 8 0	(a) 4 0 0 to 5 8 0	4 14 0 to 7 6 0	..	..	..
Narayanganj (Dacca) ..	..	..	..	3 12 0 to 5 0 0	4 2 0 to 5 4 0	5 4 0 to 6 4 0	..	..	..

(a) New.

Dacca, the 25th July 1936.

S. ABDULLAH, for *Director of Agriculture, Bengal.*

Prices-current (retail) of common rice and salt in the districts of Bengal for the first half of July 1936.

Districts and Marts.	Quantity per rupee in seers of eighty tolas.								
	Common rice.						Salt.		
	Average.			Cheapest.					
	Present return.	Next preceding return.	Corresponding return of last year.	Present return.	Next preceding return.	Corresponding return of last year.	Present return.	Next preceding return.	Corresponding return of last year.
	S. Ch.	S. Ch.	S. Ch.	S. Ch.	S. Ch.	S. Ch.	S. Ch.	S. Ch.	S. Ch.
Presidency Division.									
24-Parganas—									
1 Chetla Hat ..	9 9	9 9	10 12	11 4	11 4	12 1	18 0C	18 0C	17 12
2 Mogra Hat ..	9 2	9 6	9 6	10 0	10 10	10 0	16 0C 15 8K	16 0C 14 8K	16 0
3 Calcutta-Beliaghata ..	8 6	8 4	8 12	10 0	11 7	11 8	18 10C 17 10K 16 0P	18 10C 17 10K 16 0P	16 0
Nadia—									
4 Goari	8 10	8 0	9 6	11 13	11 7	10 12	14 0P 14 0K	14 0P 14 0K	14 0†
5 Ranaghat ..	9 8	9 8	9 0	11 12	11 12	12 4	14 0P 14 0K	14 0P 14 0K	14 0†
Murshidabad—									
6 Berhampore ..	9 8	9 8	9 8	10 0	10 0	10 0	14 0K	14 0K	14 0K
7 Kandi	9 12	9 8	10 0	10 0	9 12	10 8	13 8K 13 8B	14 0K 14 0B	14 0
8 Jangipur ..	10 0	10 0	10 0	10 8	10 4	10 4	16 0K	16 0K	15 0
Jessore—									
9 Sadar	11 0	11 8	11 0	12 0	12 8	11 8	15 0P 15 0K	15 0P 15 0K	15 0 14 0K
10 Bongaon ..	10 0	10 0	9 12	12 8	12 8	12 0	14 8P 15 0K	14 8P 15 0K	14 8 13 0K
Khulna—									
11 Sadar	10 0	10 0	11 0	12 8	11 8	12 0	16 0C 16 0K	16 0C 16 0K	14 0 13 0K
12 Bagerhat ..	8 8	8 8	12 0	10 0	10 0	12 10	15 0K	15 0K	14 0
Burdwan Division.									
Burdwan—									
13 Sadar	9 4	9 4	11 4	9 12	9 12	10 12	13 0C 13 0K	13 0C 13 0K	16 0†
14 Kalna	8 12	8 8	9 7	12 0 (R)	11 14 (R)	9 12	17 0P	17 0P	16 0
Birbhum—									
15 Suri	10 0	10 0	11 0	10 8	11 0	11 8	14 0M	14 0M	14 0
16 Rampurhat ..	10 8	10 8	8 12	11 0	11 0	10 0	16 0C	16 0C	16 0
Bankura—									
17 Sadar	10 0	10 0	10 8	11 0	11 0	11 4	14 0P	14 0P	13 0
18 Vishnupur ..	9 0	9 0	10 10	10 0	10 0	11 4	13 0P	13 0P	13 0

P—Panga. R—Rangoon rice. K—Karkach. B—Bombay. C—Crushed.

N.B.—The prices of Karkach and Liverpool salt tally with each other in marts marked †.

M—Madras.

Prices-current (retail) of common rice and salt in the districts of Bengal for the first half of July 1936.

Districts and Marts.	Quantity per rupee in seers of eighty tolas.								
	Common rice.						Salt.		
	Average.			Cheapest.					
	Present return.	Next preceding return.	Corresponding return of last year.	Present return.	Next preceding return.	Corresponding return of last year.	Present return.	Next preceding return.	Corresponding return of last year.
	S. Ch.	S. Ch.	S. Ch.	S. Ch.	S. Ch.	S. Ch.	S. Ch.	S. Ch.	S. Ch.
BURDWAN DIVISION—*concld.*									
Midnapore—									
19 Sadar	11 0	11 0	9 10	11 11	11 11	12 6	14 0L 14 0K	14 0L	14 0
20 Contai	8 0	8 0	12 0	9 0	9 0	13 0	13 0C	13 0C	21 0
Hooghly—									
21 Sadar	9 8	9 10	10 0	11 8	11 8	11 0	16 0P	16 0P	15 0
22 Arambagh ..	9 8	9 8	11 0	10 0	10 0	11 8	15 0P 14 8K	14 8P 14 0K	15 0 14 8K
Howrah—									
23 Sadar	9 8	9 8	9 8	11 0	11 0	10 8	17 8C 15 0K	17 8C 15 0K	16 0
24 Uluberia ..	9 8	9 8	11 0	10 8	10 0	12 8	16 0C 13 0K	16 0C 13 4K	16 0
RAJSHAHI DIVISION.									
Rajshahi—									
25 Rampur-Boalia ..	9 8	9 8	10 0	10 4	10 4	10 8	12 0C 12 0K	12 0C 12 0K	13 4†
26 Nator	9 12	9 12	10 2	10 8	10 8	11 4	12 0C 12 0K	12 0C 12 0K	12 0†
27 Dinajpur—Railbazar Hat.	10 0	10 0	12 0	11 0	11 0	13 4	10 0K	10 0K	14 0†
28 Jalpaiguri—Sadar ..	9 0	9 0	10 0	11 0	10 8	12 0	13 0C	13 0C	13 0
Darjeeling—									
29 Sadar	9 0	9 0	9 0	9 0	9 0	10 0	10 0P 9 0K	10 0P 9 0K	10 8 9 0K
30 Siliguri ..	10 0	10 0	10 0	11 0	11 0	11 0	12 0P 12 0K 12 0C	13 0P 12 0K 12 0C	12 0†
Rangpur—									
31 Sadar	11 4	11 4	11 13	11 4	11 4	11 13	13 8P	13 8P	14 12
32 Nilphamari ..	11 6	11 10	10 0	12 8	12 10	13 0	12 8K	12 8K	12 8
33 Bogra—Sadar ..	10 8	10 8	11 12	10 12	10 12	12 2	12 0C	12 0C	15 0
Pabna—									
34 Sadar	10 0	10 4	11 0	11 8	11 8	11 8	14 0L 14 0K	14 0L 14 0K	13 0 13 4K
35 Serajganj ..	11 4	11 0	10 4	12 0	11 8	11 0	16 0L 15 0K	16 0L 15 0K	16 0 15 0K
Malda—									
36 Sadar	10 8	10 8	11 0	11 0	11 0	11 12	14 8OK 14 0K	14 8OK 13 0K	14 8 14 0K
37 Balia—Nawabganj	10 8	10 13	11 4	11 4	11 8	11 8	15 8OK 14 8K	15 0OK 14 0K	15 0 14 0K

P—Panga. K—Karkach. C—Crushed L—Liverpool.

N. B.—The prices of Karkach and Liverpool salt tally with each other in marts marked †.

OK—Okha and other Indian varieties.

Prices-current (retail) of common rice and salt in the districts of Bengal for the first half of July 936.

Districts and Marts.	Quantity per rupee in seers of eighty tolas.								
	Common rice.						Salt.		
	Average.			Cheapest.					
	Present return.	Next preceding return.	Corresponding return of last year.	Present return.	Next preceding return.	Corresponding return of last year.	Present return.	Next preceding return.	Corresponding return of last year.
	S. Ch.	S. Ch.	S. Ch.	S. Ch.	S. Ch.	S. Ch.	S. Ch.	S. Ch.	S. Ch.
Dacca Division.									
Dacca—									
38 Sadar	9 4	9 8	10 0	10 0	11 8	11 8	13 4C 13 4K	13 4C 13 4K	14 0†
39 Mirkadim ..	10 8	10 8	10 8	11 8	11 4	11 0	14 8K	14 8K	14 8K
Mymensingh—									
40 Nasirabad ..	9 8	9 4	10 0	11 0	11 0	11 0	13 8L 13 0K	13 4L 13 0K	12 0K
41 Netrakona ..	12 4	12 12	11 4	12 8	13 10	12 8	13 8L 12 8K	13 8L 13 5K	13 12 12 8K
Faridpur—									
42 Sadar ..	11 8	11 0	10 8	12 8	12 0	12 0	13 0K	13 0K	12 0
43 Rajbari ..	10 8	10 8	10 0	12 8	12 8	12 0	12 0C	12 0C	12 0
Bakarganj—									
44 Barisal ..	10 0	10 0	10 8	10 8	10 8	10 12	14 8C 14 8K	14 8C 14 8K	11 0 13 0K
45 Pirojpur ..	9 12	9 12	10 0	10 0	10 0	10 2	14 0C 14 0K	14 0C 14 0K	13 0†
Chittagong Division.									
Tippera—									
46 Comilla ..	10 0	10 0	10 0	10 11	10 11	10 11	14 8C	14 8C	12 13 10 10K
47 Chandpur ..	10 1	10 1	10 0	11 4	11 4	10 8	16 0C	16 0C	13 5
Noakhali—									
48 Kalitara Hat ..	9 0	9 0	9 4	10 8	10 8	10 8	13 0C 10 8K	13 0C 10 8K	13 0 11 4K
49 Feni Hat ..	10 0	10 0	10 12	10 12	10 10	11 8	13 0C 13 0K	13 0C 13 2K	13 4 10 0K
Chittagong—									
50 Sadar	9 0	10 0	8 0	10 0	11 0	10 10	13 0P	13 0P	13 0
51 Cox's Bazar ..	9 8	9 0	8 8	11 0	11 0	9 8	13 0P	13 0P	13 0
52 Chittagong Hill Tracts —Rangamati ..	11 0	11 0	10 0	12 0	12 0	11 0	10 8L 7 0K	10 8L 7 0K	13 0 6 4K

P—Panga. C—Crushed. K—Karkach. L Liverpool.

N. B.—The prices of Karkach and Liverpool salt tally with each other in marts marked †.

Dacca, the 25th July 1936.

S. ABDULLAH, for *Director of Agriculture, Bengal.*

Statement showing the gauge readings at Dacca Waterworks Station on the river Buriganga for the week ending 18th July 1936.

Date.	At highest water.		At lowest water.		Commencement of		Remarks.	
	Time.	Reading.	Time.	Reading.	Ebb tide.	Flow tide.	7 a.m.	5 p.m.
1936.								
12th July ..							13·15	13·3
13th „ ..							13·3	13·3
14th „ ..							13·05	13·35
15th „ ..	Tide is not perceptible.						13·4	13·5
16th „ ..							13·5	13·6
17th „ ..							13·7	13·75
18th „ ..							13·85	14·1

Notable high and low water-levels of previous years.

		Taken at high tide.			Taken at low tide.
27th August	1906 ..	70·5	23rd February	1907 ..	51·06
5th September	1909 ..	66·86	13th „	1908 ..	51·06
10th August	1910 ..	69·86	12th March	1912 ..	51·06
1st „	1911 ..	68·46	6th „	1914 ..	50·60
13th „	1912 ..	67·16	22nd February	1915 ..	50·30
31st „	1915 ..	69·7	15th „	1916 ..	50·60
8th „	*1916 ..	68·1	3rd March	1917 ..	51·0
12th „	1917 ..	67·1	21st February	1918 ..	51·40
13th „	1918 ..	69·12	26th „	1919 ..	50·4
2nd „	1919 ..	66·8	18th „	1920 ..	50·9
8th September	1920 ..	66·9	19th „	1921 ..	50·9
28th July	1921 ..	68·4	8th March	1922 ..	51·05
10th August	1922 ..	68·00	14th „	1923 ..	50·8
31st July	1923 ..	66·15	16th February	1924 ..	50·50
29th August	1924 ..	68·82	5th March	1925 ..	50·9
8th September	1925 ..	68·52	9th February	1926 ..	2·2
15th August	1926 ..	19·6	27th „	1927 ..	2·10
17th September	1927 ..	18·70	16th „	1928 ..	2·2
22nd August	1928 ..	20·0	21st „	1929 ..	2·0
13th July	1929 ..	17·8	24th „	1930 ..	2·3
12th September	1930 ..	18·65	28th „	1931 ..	2·2
16th August	1931 ..	21·7	18th „	1932 ..	1·8
6th September	1932 ..	18·5	6th „	1933 ..	2·10
7th „	1933 ..	17·80	26th March	1934 ..	2·40
23rd August	1934 ..	19·35	15th February	1935 ..	1·70
1st September	1935 ..	19·80			

N.B.—Zero of the gauge at Dacca Waterworks prior to 11 a.m. on the 8th January 1926 −48·51 with reference to P. W. D. datum.

Zero of the gauge at Dacca Waterworks since 11 a.m. of the 8th January 1926 0·00 with reference to P. W. D. datum.

J. PRAMANIK, for *Executive Engineer,*
Khulna Division.

Khulna, the 25th July 1936.

Vital statistics of towns with a population of 50,000 and over of the Bengal Presidency for the week ending Saturday, the 18th July 1936.

Districts.	Nos.	Towns.	Population under registration according to census of 1931.			Births registered.		Deaths registered.																								
																										Total of all causes.			Total of corresponding week of the previous year.		
			Male.	Female.	Total.	Number registered (excluding still-births).	Still-births registered.	Cholera.	Small-pox.	Plague.	Cerebro-spinal meningitis.	Malaria.	Enteric fever.	Measles.	Relapsing fever (Spirochætal).	Kala-azar.	Influenza.	Other fevers.	Dysentery.	Diarrhœa.	Pneumonia.	Pulmonary tuberculosis.	Other respiratory diseases.	Injuries including suicide.	Deaths from child-birth.	Other causes.	Male.	Female.	Total	Male.	Female.	Total.
Calcutta ..	1	Calcutta ..	778,817	362,045	1,140,862	435	61	10	10	..	7	11	31	4	..	4	7	30	38	14	99	71	41	12	5	273	350	317	667	318	234	552
Burdwan ..	2	Asansol Mining Settlement.	209,544	173,136	382,680	220	5	4	..	..	..	..	1	..	..	..	..	65	2	..	3	2	3	4	2	51	76	61	137	95	74	169
Howrah ..	3	Howrah ..	145,120	79,753	224,873	140	5	2	2	..	..	2	..	..	..	1	..	1	11	8	11	8	26	3	1	39	61	54	115	65	55	120
Dacca ..	4	Dacca ..	79,365	59,153	138,518	83	3	..	..	..	..	..	..	1	..	3	..	..	9	2	12	1	7	1	..	20	33	23	56	27	23	50
24-Parganas	5	Bhatpara ..	60,134	24,841	84,975	29	2	..	..	..	..	1	..	..	..	..	1	10	1	1	2	1	..	..	2	8	10	17	27	13	11	24
	6	Garden Reach	36,131	19,741	55,872	21	1	..	..	..	..	3	..	..	..	..	..	5	..	..	2	..	..	2	1	2	8	7	15	10	7	17
Chittagong ..	7	Chittagong ..	35,049	18,107	53,156	24	2	1	..	..	..	..	..	..	..	..	..	5	2	..	..	..	..	2	..	6	6	10	16	6	12	18

Calcutta, the 24th July 1936.

A. C. CHATTERJI, M.B., D.P.H., MAJOR, I.M.S., *Director of Public Health, Bengal.*

Printed and published by the Superintendent, Government Printing, Bengal Government Press, Alipore, Bengal, on the 30th July 1936.

Registered No. C207

No. 32 of 1936

The Calcutta Gazette

Published by Authority

THURSDAY, AUGUST 6, 1936.

CONTENTS:

	Page.
PART I.—Orders and Notifications by the Governor of Bengal, the Government of Bengal, the High Court, Government Treasury, etc.	1873—1903
PART IA.—Orders and Notifications by the Government of India republished for general information	199—214
PART IB.—Educational Notices ..	1309—1326
PART II.—Advertisements ..	713—722
PART III.—Acts of the Bengal Legislative Council	*Nil*
PART IV.—Bills introduced in the Bengal Legislative Council, Reports of Select Committees presented or to be presented to that Council, and Bills published before introduction in that Council ..	*Nil*
PART V.—Acts of the Indian Legislature assented to by the Governor-General and Ordinances promulgated under section 72 of the Government of India Act ..	*Nil*
PART VI.—Bills introduced in the Council of State and Legislative Assembly, Reports of Select Committees presented to the Council and Assembly and Bills published under rule 18 of the Indian Legislative Rules	*Nil*
SUPPLEMENT No. 32 :—	
Thirtieth Annual Report of the Bengal Smoke Nuisances Commission for the year 1935	1071—1079
River water-levels—Area leased for irrigation—Weekly Weather and Crop Report—Weekly Vital Statistics—Weekly Gauge Readings—Cotton Ginning and Pressing—Corporation of Calcutta Notice	1080—1090

PART I

Orders and Notifications by the Governor of Bengal, the Government of Bengal, the High Court, Government Treasury, etc.

Orders by the Government of Bengal.

No. 6822A.

Appointments and Transfers.

GENERAL.

Nadia.—No. 6719A.—29th July 1936.—Mr. Nirmal Shankar Sen, M.B.E., Deputy Magistrate and Deputy Collector, Nadia, is appointed temporarily to have charge of the Kushtia subdivision of that district.

Pabna.—No. 6751A.—30th July 1936.—Maulvi Muhammad Abdullah, Deputy Magistrate and Deputy Collector, on leave, is posted to the Serajganj subdivision of the Pabna district.

Noakhali-Khulna.—No. 6755A.—30th July 1936.—Babu Surendra Nath Biswas, Deputy Magistrate and Deputy Collector, Noakhali, is transferred to the Satkhira subdivision of the Khulna district.

Rajshahi Division.—No. 6777A.—31st July 1936.—Maulvi Zahurul Qaiyum, Sub-Deputy Collector, on leave, is posted to the Rajshahi Division.

ECCLESIASTICAL.

Chittagong Hill Tracts.—No. 6680A.—29th July 1936.—Mr. Golam Rahim Biswas of Chandraghona, in the district of Chittagong Hill Tracts, is authorised, under section 6 of Act XV of 1872, to solemnize marriages between persons, one or both of whom is or are a Christian or Christians and, under section 9 of the Act, to grant certificates of marriages between persons who are native Christians.

2. He is also appointed under Act VI of 1886 to be a Registrar of Births and Deaths for the district of Chittagong Hill Tracts.

Dinajpur.—No. 6782A.—31st July 1936.—The Reverend Walter Bruce Stark Davis, an Ordained Minister of Religion of the Baptist Church, Dinajpur, is authorised, under section 6 of Act XV of 1872, to solemnize marriages between persons one or both of whom is or are a Christian or Christians.

2. He is also appointed under Act VI of 1886 to be a Registrar of Births and Deaths for the district of Dinajpur.

H. J. TWYNAM,

Chief Secy. to the Govt. of Bengal (offg.).

Leave.

GENERAL.

Calcutta.—No. 6664A.—28th July 1936.—Mr. H. J. Twynam, C.I.E., I.C.S., officiating Chief Secretary to the Government of Bengal, is allowed leave for four months and fifteen days, viz., leave on average pay for one month and twenty-three days, under rule 81(*b*)(*i*) of the Fundamental Rules, with effect from the 1st August 1936, or any subsequent date on which he may be relieved, and leave on half average pay for the remaining period, under rule 81(*d*) of those Rules.

S. BASU,

Dy. Secy. to the Govt. of Bengal.

Hooghly.—No. 6713A.—29th July 1936.—Babu Sachindra Nath Mukharji, Deputy Magistrate and Deputy Collector, Arambagh, Hooghly, was allowed leave on average pay for twelve days, under rule 81(*b*)(*ii*) of the Fundamental Rules, with effect from the 13th July 1936.

Nadia.—No. 6716A.—29th July 1936.—Mr. A. S. Ray, I.C.S., Joint Magistrate and Deputy Collector, Kushtia, Nadia, is allowed leave on average pay for thirteen days, under rule 81(*b*)(*ii*) of the Fundamental Rules, with effect from the 27th July 1936.

Birbhum.—No. 6724A.—30th July 1936.—Mr. B. K. Guha, I.C.S., officiating District and Sessions Judge, Birbhum, was allowed leave on average pay, under rule 81(*b*)(*ii*) of the Fundamental Rules, from the 22nd July 1936 to the 25th July 1936, inclusive.

Nadia.—No. 6739A.—30th July 1936.—Rai Sahib Brindaban Chandra De, Deputy Magistrate and Deputy Collector, Nadia, is allowed leave on average pay for eight days, under rule 81(*b*)(*ii*) of the Fundamental Rules, with effect from the 29th August 1936.

24-Parganas.—No. 6742A.—30th July 1936.—Mr. Jatindra Kumar Biswas, Deputy Magistrate and Deputy Collector, 24-Parganas, is allowed leave on average pay for one month, under rule 81(*b*)(*ii*) of the Fundamental Rules, with effect from the 11th July 1936, or any subsequent date on which he may avail himself of it.

No. 6785A.—1st August 1936.—Maulvi Saleh Ahmad, Deputy Magistrate and Deputy Collector, is allowed leave on half average pay up to the 15th January 1937, under rule 81(*d*) of the Fundamental Rules, in extension of the leave granted to him under the orders of the 26th March 1936.

POLICE.

No. 6795A.—1st August 1936.—Mr. L. N. Bavin, I.P., has been granted by the High Commissioner for India an extension of leave on half average pay for six months and twenty-six days.

G. P. HOGG,

Chief Secy. to the Govt. of Bengal.

NOTIFICATION.

No. 6807A.—3rd August 1936.—The Hon'ble Sir Robert Niel Reid, K.C.I.E., C.S.I., I.C.S., Member of the Executive Council of the Governor of Bengal, on return from the leave of absence announced in notification No. 3897A., dated the 2nd April 1936, resumed charge of his office in the afternoon of the 1st August 1936.

S. BASU,

Dy. Secy. to the Govt. of Bengal.

Reforms.

NOTIFICATIONS.

No. 5561A.R.—3rd August 1936.—Whereas by notification No. 1479 A. R. D., dated the 15th May 1936, the Governor in Council appointed the Trade Union Constituencies Tribunal to perform the functions conferred on him by paragraph 18 of Part IV of the Government of India (Provincial Legislative Assemblies) Order, 1936:

And whereas the said Tribunal certified the following Trade Unions as having satisfied the conditions referred to in sub-paragraph (*2*) of the said paragraph to be recognised Trade Unions:

Now, therefore, in pursuance of the provisions of rule 47 of the Bengal Legislative Assembly Electoral (Preparation, Revision and Publication of Electoral Rolls) Rules, 1936, the Governor in Council is pleased to publish the following list of recognised Trade Unions:—

1. Kanchrapara Railway Workmen's Union.
2. E. B. Railway Indian Employees' Association.
3. Bengal Nagpur Railway Indian Labour Union.
4. Indian Seamen's Union.
5. E. I. Railway Employees' Association.
6. Bengal Mariners' Union (with which the I.M. and W. U. is amalgamated).
7. Railway Press Workers' Union.
8. Calcutta Tramway Workers' Union.
9. Kankinarah Labour Union.
10. Press Employees' Association.
11. Calcutta Sramik Mandal.
12. Calcutta Corporation Employees' Association.
13. Howrah Sramik Sangha.
14. All Bengal Press Workers' Union.

No. 5562A.R.—3rd August 1936.—Whereas by notification No. 1479A.R.D., dated the 15th May 1936, the Governor in Council appointed the Trade Union Constituencies Tribunal to perform the functions conferred on him by paragraph 18 of Part IV of the Government of India (Provincial Legislative Assemblies) Order, 1936:

And whereas the said Tribunal certified the following recognised Trade Unions as having satisfied the conditions referred to in sub-paragraph (*1*) of the said paragraph to be constituent Trade Unions:

Now, therefore, in pursuance of the provisions of rule 47 of the Bengal Legislative Assembly Electoral (Preparation, Revision and Publication of Electoral Rolls) Rules, 1936, the Governor in Council is pleased to publish the following list of constituent Trade Unions:—

1. Kanchrapara Railway Workmen's Union.
2. E. B. Railway Indian Employees' Association.
3. Bengal Nagpur Railway Indian Labour Union.
4. Indian Seamen's Union.
5. E. I. Railway Employees' Association.
6. Bengal Mariners' Union (with which the I. M. and W. U. is amalgamated).
7. Railway Press Workers' Union.

R. N. GILCHRIST,
Reforms Commissioner and Joint Secy. (ex-officio) to the Govt. of Bengal.

POLICE DEPARTMENT.

NOTIFICATIONS.

Jalpaiguri. — No. 3367Pl. — 29th July 1936. — The Governor in Council is pleased to appoint the following persons to form the panel of medical practitioners in the Jalpaiguri district under sub-rule (*1*) of rule 23 of the Bengal Motor Vehicles Rules, 1935. The panel will hold office for a period of two years with effect from the 1st May 1936:—

1. Dr. J. Hay Arthur, Manabari post office.
2. Dr. C. C. Harrison, Rungamuttee, Mal post office.
3. Dr. H. W. F. Croft, Matelli post office.
4. Dr. J. M. Sclater, Nagrakata post office.
5. Dr. J. S. Bradford, Binnaguri post office.
6. Dr. D. Reid Tweedie, Dalmore, Birpara post office.
7. Dr. H. G. Cattell, Hasimara post office.
8. Dr. C. McGuire, Newlands post office.
9. Dr. Girindra Nath De, Debpara, Banarhat post office.
10. Dr. Brojendra Lal Dutta, Alipur-Duar.
11. Dr. Sures Chandra Gupta, Mainaguri post office.

No 3370Pl.—29th July 1936.- The following draft of an amendment, which, in exercise of the powers conferred by section 11 of the Indian Motor Vehicles Act, 1914 (VIII of 1914), the Governor in Council proposes to make in the Bengal Motor Vehicles Rules, 1935, published under notification No. 436Pl., dated the 31st January 1935, at pages 167-263, Part I of the *Calcutta Gazette* of the same date, as amended from time to time, is hereby published for the information of persons likely to be affected thereby.

The draft will be taken into consideration on or after the 7th September 1936, and any objection or suggestion received with regard thereto by the undersigned before that date will be duly considered :—

Draft amendment.

Substitute the following for the proviso to rule 4(*1*) of the said rules :—

" Provided that except for the purpose of casual or occasional running, a heavy motor car or public service vehicle shall not be used in any district other than the district in which it is registered without the permission of the District Magistrate concerned "

H. J. TWYNAM,

Chief Secy. to the Govt. of Bengal (offg.).

Calcutta Police Notification.

The 30th July 1936.

No. 7588/G.—In exercise of the powers conferred by clause (*c*) of section 62(*1*) of the Calcutta Police Act, 1866 (Bengal Act IV of 1866), the Commissioner of Police, Calcutta, with the previous sanction of the Governor in Council, hereby makes the following amendments in the rules for the regulation of traffic, etc., in the streets and public places in Calcutta and its suburbs published under Calcutta Police notification No. 134, dated the 6th January 1932, at pages 37-99, Part I of the *Calcutta Gazette* of the 14th January 1932 :—

Amendments.

Under sub-heading "(*b*) One Way traffic" in Part II (Special rules for the regulation of traffic) insert the following after rule 78(I) relating to Dacres Lane :—

(12) *Ezra Street- Pollock Street—Manook Street Area.*

78(J) The undermentioned streets shall be treated as "One Way" streets and vehicles shall be permitted to proceed along these streets in the directions specified below, namely—

(*a*) Pollock Street from north to south.

(*b*) Ezra Street from south to north.

(*c*) Manook Street from west to east.

78(K) Vehicles shall only park on the near side of the streets mentioned above.

78(L) Carts for hire shall park on the stands provided as specified below. The parking of such carts shall be prohibited on any other portions of these streets mentioned in this paragraph :—

(*a*) Parks—

(*i*) A stand for ten carts shall exist on the west side of Ezra Street on the side demarcated opposite the junction of Parsi Church Street.

(*ii*) A stand for ten carts shall exist on the west side of Pollock Street on the side demarcated immediately north of the junction of Radha Bazar Street.

L. H. COLSON,

Commissioner of Police, Calcutta.

JUDICIAL DEPARTMENT.

No. 6823A.

Powers.

Faridpur.—No. 6771A.—31st July 1936.—Mr. M. H. Ali, I.C.S., Joint Magistrate, Goalundo, Faridpur, is vested with the power to try summarily the offences mentioned in section 260 of the Code of Criminal Procedure.

H. J. TWYNAM,

Chief Secy. to the Govt. of Bengal (offg.).

Appointments and Transfers.

Midnapore.—No. 5790J.—28th July 1936.—In exercise of the powers conferred by section 14 and the proviso to section 357 of the Code of Criminal Procedure, 1898 (Act V of 1898), the Governor in Council is pleased—

(*a*) to confer upon Babu Birendra Nath Mondal the powers of a Magistrate of the third class, in the district of Midnapore, for a period of three years from the 20th May 1936, in respect of such cases as may be made over to him sitting at Ramjibanpur within the limits of the Ghatal subdivision of the said district, and

(*b*) to direct him to take down evidence in the English language.

He is also empowered to take cognizance under section 190(*1*)(*a*) and (*b*) of the Criminal Procedure Code of offences under the Police Act V of 1861.

Malda.—No. 5793J.—28th July 1936.—In exercise of the powers conferred by sections 14 and 15 and the proviso to section 357 of the Code of Criminal Procedure, 1898 (Act V of 1898), the Governor in Council is pleased—

(*a*) to confer upon Babu Pramatha Nath De the powers of a Magistrate of the second class, in the district of Malda, for a period of three years from the 10th August 1936, in respect to such cases as may be made over to him within the limits of the Sadar subdivision of the said district,

(*b*) to direct that he shall, in addition to sitting singly, sit as a member of the Sadar bench in the said district, and

(*c*) to direct him to take down evidence in the English language.

Khulna.—No. 5865J.—31st July 1936.—In exercise of the powers conferred by sections 14 and 15 and the proviso to section 357 of the Code of Criminal Procedure, 1898 (Act V of 1898), the Governor in Council is pleased—

(*a*) to confer upon Babu Dhirendra Nath Bhattacharji the powers of a Magistrate of the third class, in the district of Khulna, for a period of three years from the date of this notification,

(*b*) to direct him to sit as a member of the Sadar bench in the said district, and

(*c*) to direct him to take down evidence in the English language.

Tippera-Bakarganj.—No. 5867J.—31st July 1936.—Babu Bikas Chandra Nandi Majumdar, probationary munsif, now employed as a munsif at Comilla, in the district of Tippera, is appointed to be additional munsif of Pirojpur, in the district of Bakarganj, during the absence, on leave, of Maulvi Amiruddin Sarkar, or until further orders.

Midnapore-Birbhum.—No. 5870J. —31st July 1936.—Babu Subodh Chandra Mukharji, munsif of Tamluk, in the district of Midnapore, is appointed to be a munsif in the district of Birbhum, to be ordinarily stationed at Rampurhat, *vice* Maulvi Syed Alla Hafiz.

No. 5875J.—31st July 1936.—The following candidates are appointed on probation to the Bengal Civil Service (Judicial) as munsifs, with effect from the 10th August 1936. They are directed to report themselves to the Principal, Bengal Engineering College, Shibpur, for training in Surveying:—

Babu Tara Pada Mukharji, M.A., B.L., son of Rai Tarak Chandra Ray Bahadur.

Babu Jyotsna Nath Mallik, M.A., B.L., son of Babu Kumud Ranjan Mallik.

Babu Kshetradas Banarji, M.A., B.L., son of Mr. C. N. Banarji.

Maulvi Abdul Moudud, M.A., B.L., son of late Maulvi Mahfuzal Hoque.

Babu Samarendra Nath Mukharji, M.A., B.L., son of Babu Satya Charan Mukharji.

Babu Santosh Kumar Sen, M.A., B.L., son of Babu Kali Mohan Sen.

Babu Santosh Kumar Ghosh, M.A., B.L., son of Babu Uma Nath Ghosh.

Babu Anil Kumar Sen, M.A., B.L., son of Babu Nirmal Kumar Sen.

Maulvi Aminul Islam, M.A., B.L., son of Maulvi Muhammad Roushan Ali.

Babu Krishna Kumar Mitra, M.SC., B.L., son of Mr. Phanindra Nath Mitra.

Babu Santosh Kumar Chakrabatti, M.A., B.L., son of Babu Manmatha Nath Chakrabatti.

Babu Bibhutosh Banarji, M.A., B.L., son of Babu Ashutosh Banarji.

Babu Nikhil Chandra Ganguli, M.A., B.L., son of Rai Gopal Chandra Ganguli Bahadur.

Mr. Sashi Bhusan Mandal, Barrister-at-law, son of Babu Kailash Chandra Mandal.

Maulvi A. B. Muhammad Mazharul Huq, B.L., son of Maulvi Abdul Huq.

Babu Sailesh Chandra Sen Gupta, B.L., son of Babu Satish Chandra Sen.

Babu Hemendra Nath Sen, M.A., B.L., son of Babu Birendra Nath Sen.

Maulvi Majibar Rahman Khan, B.L., son of late Maulvi Muhammad Muzaffar Khan.

Babu Kshetra Mohan Das, M.A., B.L., son of Babu Aswini Kumar Das.

They will be on probation for a period of two years during which they will be required to undergo the prescribed training and to pass completely the departmental examinations. Their confirmation will depend on their passing the departmental examinations by the higher standard and on their general fitness.

T. ROXBURGH,
Secy. to the Govt. of Bengal (offg.).

LOCAL SELF-GOVERNMENT DEPARTMENT.

NOTIFICATIONS.

Minister-in-charge: The Hon'ble Sir Bijoy Prasad Singh Roy, Kt.

Burdwan. — No. 5998M. — 27th July 1936.—In exercise of the power conferred by section 58 (2) of the Bengal Muncipal Act, 1932 (Bengal Act XV of 1932), the Government of Bengal (Ministry of Local Self-Government) are pleased to appoint Munshi Muhammad Entazali as a Commissioner of the Kalna Municipality in the district of Burdwan, *vice* Maulvi Muhammad Jahur Ali, resigned.

Bankura.—No. 6005L S -G. — 28th July 1936 - In exercise of the power conferred by section 10A of the Bengal Local Self-Government Act, 1885 (Bengal Act III of 1885), the Government of Bengal (Ministry of Local Self-Government) are pleased to determine that the Muhammadan community in the area under the authority of the district board of Bankura and the local board of Vishnupur subdivision of district Bankura shall be deemed to be a minority community for the purposes of that section.

24-Parganas.—No. 6014M.— 29th July 1936.— In exercise of the power conferred by section 506 of the Bengal Municipal Act, 1932 (Bengal Act XV of 1932), the Government of Bengal (Ministry of Local Self-Government) are pleased to confirm the by-laws framed by the Commissioners of the Tollygunge Municipality, in the district of the 24-Parganas, under section 355 of the said Act and published for information under notification No. 2533M., dated the 21st April 1936.

No. 6032 L. S -G.—30th July 1936.—In exercise of the power conferred by section 12 of the Bengal Motor Vehicles Tax Act, 1932 (Bengal Act I of 1932), the Government of Bengal (Ministry of Local Self-Government) are pleased to make the following amendment in the rules published under notification No. 5859 L. S.-G., dated the 31st October 1933, at pages 1575-1593 of Part I of the *Calcutta Gazette*, dated the 9th November 1933 :—

Amendment.

At the end of rule 30 of the said rules *add* the following :—

(*u*) Motor bus which is the property of Government and used for Government publicity, work for the period during which it is so used.

Midnapore. — No. 6092M. — 3rd August 1936.—In exercise of the power conferred by section 506 of the Bengal Municipal Act, 1932 (Bengal Act XV of 1932), the Government of Bengal (Ministry of Local Self-Government) are pleased to confirm the by-laws framed by the Commissioners of the Tamluk Municipality, in the district of Midnapore, under section 417 of the said Act and published for information under notification No. 1224M., dated the 24th February 1936.

24-Parganas.—No 6094M. — 3rd August 1936.—In exercise of the power conferred by section 506 of the Bengal Municipal Act, 1932 (Bengal Act XV of 1932), the Government of Bengal (Ministry of Local Self-Government) are pleased to confirm the by-laws framed by the Commissioners of the Baruipur Municipality, in the district of 24-Parganas, under section 245(*a*) and (*b*) of the said Act and published for information under notification No. 2544M., dated the 21st April 1936.

Howrah.—No. 6104M.—3rd August 1936.— The following draft of by-laws, which has been framed by the Commissioners of the Bally Municipality, in the district of Howrah, under section 417 of the Bengal Municipal Act, 1932 (Bengal Act XV of 1932), and which the Government of Bengal (Ministry of Local Self-Government) propose to confirm under section 506 of the Act, is published for the information of persons likely to be affected thereby.

2. The draft will be taken into consideration on the 2nd November 1936, and any objection or suggestion received by the undersigned through the District Magistrate and the Divisional Commissioner before that date will be duly considered :—

Draft by-laws.

By-laws regarding standardization of weights and measures (section 417 of the Bengal Municipal Act, 1932).

1. In these by-laws the word "vendor" includes a shop-keeper, stall-holder, squatter or other salesman in any market or in any other place within the municipality.

2. All vendors within the municipality shall use—

(*i*) Government standard weights, that is to say, a *maund* consisting of forty *seers*, a *seer* consisting of eighty *tolas*, and a *tola* consisting of one hundred and eighty *grains*; and

(*ii*) a standard cubit consisting of eighteen inches for the measure of commodities other than land.

3. The Commissioners shall require the superintendents of the municipal markets or any other officers duly authorised by them in that behalf, and may require the owner, manager or other person in charge of a private market to keep in their custody standards of weights and measures conforming with the standard prescribed in by-law 2 for the purpose of verifying the weights and measures used by any vendor for the sale of articles in any market or in any other place. Such superintendents or other officers duly authorized by the Commissioners shall keep in their custody a die for the purpose of stamping weights and measures, which have been duly verified in the manner provided in by-law 4.

4. The superintendent of a municipal market or any other officer duly authorized by the Commissioners in that behalf shall, not less than once in every three months, test and verify the weights and measures used by each vendor in every market or other place by comparison with the aforesaid standards and shall also similarly test and verify every weight or measure that may be brought to him by any person at his office for the purpose of verification; and if in either case, he finds the same to be correct, shall stamp it with the die mentioned in by-law 3 by way of verification on payment of such fee, *not exceeding annas four* in each case, as the Commissioners may from time to time direct:

Provided that weights and measures once stamped shall not be stamped with the die a second time unless the stamp has become faint or obliterated.

No. 6106L.S.-G.—3rd August 1936. — The following draft of an amendment, which, in exercise of the power conferred by clause (*c*) of sub-section (2) of section 101 of the Bengal Village Self-Government Act, 1919 (Bengal Act V of 1919), the Government of Bengal (Ministry of Local Self-Government) propose to make in the rules, published under notification No. 4267L.S.-G., dated the 5th January 1920, is published for the information of persons likely to be affected thereby.

2. The draft will be taken into consideration on the 1st October 1936, and any objection or suggestions received by the undersigned through District Officers before that date will be duly considered:—

Draft amendment.

For rule 1 of the said rules *substitute* the following:—

1. Meeting shall be held at the office of the union board or, if the board has got no office of its own, at such other place as the President may from time to time determine.

Medical.

Minister-in-charge: The Hon'ble Sir Bijoy Prasad Singh Roy, Kt.

Khulna. No. 3135 Medl.—29th July 1936.—Dr. Ali Ahmed of the Bagerhat subdivision and dispensary, district Khulna, was allowed leave on average pay for twenty-three days, under rule 81(*b*)(*ii*) of the Fundamental Rules, with effect from the 19th June 1936.

Faridpur.—No. 3139 Medl.—29th July 1936.—Rai Dr. J. N. Chatterji Bahadur, Civil Surgeon, Faridpur, is granted leave on average pay for five months and fourteen days preparatory to retirement, with effect from the 2nd June 1936, viz., four months under Fundamental Rule 81(*b*)(*ii*) and the remaining period under the proviso to Fundamental Rule 81(*b*)(*ii*), provided the leave after the first four months is spent elsewhere than in India, Ceylon or Nepal.

2. This cancels notification No. 213 T.Medl., dated the 1st June 1936.

Calcutta.—No. 3149Medl.—31st July 1936.—Dr. Satipati Goswami, Emergency Officer, Medical College, Calcutta, is granted earned leave for fifteen days from 4th May to 18th May 1936, and leave on medical certificate from 19th May to 5th July 1936, under rules 10 and 16, respectively, of the Bengal Services (Revision of Leave) Rules, 1934, in extension of the leave already granted to him in notification No. 135T.—Medl., dated the 16th May 1936.

Calcutta.—No. 3150Medl.—31st July 1936.—Dr. Satipati Goswami, on the expiry of his leave, is appointed to act as House Surgeon, Presidency General Hospital, Calcutta, *vice* temporary Assistant Surgeon Dr. Dina Bandhu Sett.

Public Health.

NOTIFICATION.

Minister-in-charge: The Hon'ble Sir Bijoy Prasad Singh Roy, Kt.

Burdwan.—No. 2979P.H.—1st August 1936.—In pursuance of rule 8 of the rules for the preparation, publication and execution of projects for water-supply, sewerage or drainage by municipal authorities, it is hereby notified for general information that the sewerage scheme submitted by the Commissioners of the Asansol Municipality has been approved by the Government of Bengal (Ministry of Public Health) and that the particulars of the said scheme are as follows:—

1. (*a*) The scheme consists of a main sewer running along Boston Bazar Street and Central Road and discharging into septic tanks located near the river bank below the town. At the north end of the railway tunnel the main sewer will receive a branch sewer which will serve the Railpur bustee and at the upper end of the main sewer two branch sewers will join, one from Budhadanga Road and the other from Southern Road. Four hand dumping depôts will be provided, viz., three along Southern Road, and one at Railpur bustee. A cart dumping depôt will also be provided in Budhadanga Road. The main sewer will pass through the railway property and will be at a level low enough to receive the effluent from the railway septic tanks. Provision has been made for special crossings over the existing main drain and for detritus tanks and septic tanks, the former will be sufficient to deal with six times the dry weather flow during wet weather and the latter will deal with three time the dry weather flow.

(*b*) The estimated cost of the scheme is Rs. 1,43,600 to be financed as follows:—

(*1*) Municipal contribution—Rs. 3,600.

(*2*) Loan from Government—Rs. 1,40,000.

(*c*) and (*d*) No extra cost of maintenance is involved

(*e*) A loan of Rs. 1,40,000 from Government is required for the scheme by the municipality to be repaid in thirty years in equal yearly instalments of Rs. 8,096-3-5 each.

2. The scheme will be taken into consideration on or after the 1st September 1936, and any objection or suggestion with regard thereto, which may be received by the undersigned before that date, will be duly considered.

G. S. DUTT,
Secy. to the Govt. of Bengal.

EDUCATION DEPARTMENT.

NOTIFICATIONS.

Minister-in-charge: The Hon'ble Khan Bahadur M. Azizul Haque.

Khulna.—No. 2438Edn.—28th July 1936.—Mr. Bhupendra Nath Sen, Sub-Inspector of Schools, on leave, is appointed to act in the Bengal Educational Service as District Inspector of Schools, Khulna, with effect from the 5th August 1936, or any subsequent date on which he joins the appointment, *vice* Babu Ramesh Chandra Chakravarti, on deputation, or until further orders.

Presidency-Burdwan Divns.—No. 2439Edn. —29th July 1936.—Mr. Fazlur Rahman, officiating 2nd Inspector of Schools, Presidency Division, is appointed to act in the Bengal Senior Educational Service as Second Inspector of Schools, Burdwan Division, with effect from the date on which he joins the appointment, *vice* Khan Bahadur Maulvi Abdur Rahman Khan, on deputation, or until further orders.

Nadia-Presidency Divn. — No. 2440Edn.— 29th July 1936.—Khan Sahib Maulvi Anwarul Qadir, officiating District Inspector of Schools, Nadia, is appointed to act in the Bengal Educational Service, as 2nd Inspector of Schools, Presidency Division, with effect from the date on which he joins the appointment, *vice* Mr. Fazlur Rahman, on deputation, or until further orders.

Dacca.—No. 2473Edn.—30th July 1936.—Babu Hara Lal Mukharji, Subdivisional Inspector of Schools, Dacca Sadar, acted in the Bengal Educational Service as District Inspector of Schools, Dacca, for the period from the 21st December 1935 to the 23rd April 1936 (both days inclusive), pending the arrival of Babu Dwarka Nath Mazumdar.

Calcutta.—No. 2480Edn.—30th July 1936. —Babu Bholanath Sarkar, officiating Head Assistant, office of the Director of Public Instruction, Bengal, continued to act as Personal Assistant to the Director of Public Instruction, Bengal, from the 1st to the 11th July 1936, both days inclusive, during the extended period of leave of Khan Bahadur Maulvi Abdul Latif Khan.

No. 2513Edn.—31st July 1936.—In exercise of the powers conferred by clause (*z6*) of sub-section (*2*) of section 66 of the Bengal (Rural) Primary Education Act, 1930 (Bengal Act VII of 1930), the Government of Bengal (Ministry of Education) are pleased to make the following rules:—

Rules under section 66 (2) (z6) of the Bengal (Rural) Primary Education Act, 1930, regarding the form of application for, and the conditions of grant of, and withdrawal of, recognition to a primary school under section 54 of the Act.

1. Application to the Board for recognition as a primary school shall be made in writing, and shall give information on the following points and upon such other points as the Board shall direct:—

(*a*) name of the school;

(*b*) location of the school;

(*c*) description of the school building and grounds;

(*d*) number of pupils in each class of the school, Hindus, Moslems and other communities being shown separately;

(*e*) names, qualifications, and pay of the school staff;

(*f*) sources and amount of school income;

(*g*) names and designations of persons who form the managing authority of the school.

2. As soon as possible after the receipt of the application, the Board shall cause the school to be inspected by an inspecting officer of the Department of Public Instruction, and after considering his report shall either recognise the school, or refuse recognition.

3. The Board may grant recognition unconditionally, or subject to the fulfilment within a stated period, of certain specified conditions, but in no case shall a school be recognised for a period of more than five years, at the expiry of which period the managing authority of the school may apply again to the Board for recognition.

4. Before recognising a school in respect of which no application for recognition as a primary school has been made, the Board shall cause the school to be inspected by an inspecting officer of the Department of Public Instruction and shall follow the same procedure as if an application for recognition has been made.

5. The Board shall not, except for reasons to be recorded in writing, grant recognition to any school which does not fulfil the following conditions:—

(*a*) The school has been in continuous existence for at least six months previous to the date of the application for its recognition;

(*b*) The school has a managing authority approved by the Board;

(*c*) The school has a house in which there is room enough for the children to be taught and which is well lighted and airy and equipped with the necessary furniture and teaching appliances;

(*d*) The school has grounds adequately shaded and of sufficient extent to permit of its classes being held out of doors during the dry months of the year;

(*e*) The school has four classes and on its staff at least two trained teachers;

(*f*) The school follows a course of studies approved by the Department of Public Instruction;

(*g*) The school makes proper provision in its staff and in its teaching for the religious and other interests of Moslems and members of other communities;

(*h*) The school observes the rules framed by the Department of Public Instruction regarding admission and withdrawal of pupils and such other matters;

(*i*) The school maintains the following registers:—

(*i*) Admission register.

(*ii*) Attendance register for teachers.

(*iii*) Attendance and fee register for pupils.

(*iv*) Cash and monthly abstract account book.

(*v*) Acquittance roll of teachers.

(*vi*) Acquittance roll of scholars.

(*vii*) Visitors' book.

(*viii*) Transfer certificate register.

(*ix*) Proceedings book for managing authority.

(*x*) Library catalogue.

(*xi*) Result book of class and other examinations.

(*xii*) Stock book.

6. The order of the Board granting recognition to a school shall specify the date from which recognition is granted, the period of such recognition and the conditions, if any, attaching to it.

7. A school recognised by the Board shall be open to inspection by officers of the Department of Public Instruction, by members of the Board, by the Commissioner of the Division, the District Magistrate, the Subdivisional Officer and the Circle Officer.

8. If the Board has reason to believe that a school to which recognition has been granted is no longer fit for continuing to be recognised, it shall cause the school to be inspected by an officer of the Department of Public Instruction, call for a report from such officer and may after considering the report withdraw the recognition granted.

9. It shall be open to an inspecting officer of the Department of Public Instruction to submit at any time a report to the Board on any school recognised by the Board, and the Board shall deal with such a report, as though the report had been called for by the Board.

10. An order of the Board withdrawing recognition from a school shall state—

(*i*) the name and location of the school;

(*ii*) the date from which recognition is withdrawn;

(*iii*) the reasons.

No. 2521Edn.—31st July 1936.—In exercise of the powers conferred by clause (*z7*) of sub-section (*2*) of section 66 of the Bengal (Rural) Primary Education Act, 1930 (Bengal Act VII of 1930), the Government of Bengal (Ministry of Education) are pleased to make the following rules:—

Rules under section 66(2) (z7) of the Bengal (Rural) Primary Education Act, 1930, regarding the form of application for, and the conditions of grant of, aid to a primary school under private management under section 55 of the Act.

General.

1. Grants-in-aid to a primary school given by the Board may be either capital or recurring.

2. The managing authority of a primary school under private management desiring to receive a grant-in-aid from the Board shall submit an application in writing, and the Board may prescribe a date or dates on or before which such applications are to be made.

3. Every application for a grant shall give information on the following points and on such other points as the Board may direct:—

(*a*) Name and location of the school.

(*b*) Number of pupils in each class of the school.

(*c*) Names, qualifications and pay of the school staff.

(*d*) Rates of fees, if any, charged from the pupils.

(*e*) Sources and amount of other school income.

(*f*) Details of monthly expenditure of the school.

(*g*) Nature and amount of grant asked for.

(*h*) Names and designations of the persons forming the managing authority of the school.

(*i*) Number and date of the order granting recognition to the school.

4. On receipt of an application for a grant, the Board shall, if it deems such a course necessary, cause the school to be inspected by an inspecting officer of the Department of Public Instruction, and, after considering the application from the school and the report, if any, of the inspecting officer, may give a grant to the school.

5. The order of the Board giving a grant to a school shall specify the name and location of the school, the nature, amount and purpose of the grant, the period for which it is given (in the case of recurring grants), the conditions, if any, attaching to the grant and the method of payment.

6. The Board shall not give a grant to a school which is not recognised by the Board.

Capital grants.

7. The Board shall be competent to sanction a capital grant to a primary school under private management for—

(*a*) the buying or acquiring of land for the school;

(*b*) the buying, constructing or extending of the school building;

(*c*) the making of extraordinary repairs to the school building;

(*d*) the buying of furniture or appliances for the school;

(*e*) any other purpose approved by the Local Government.

8. The Board shall not, without the previous approval of the Director of Public Instruction, sanction a capital grant the amount of which exceeds one thousand rupees.

9. Any application for a grant-in-aid for the purposes mentioned in clauses (*a*), (*b*) and (*c*) of rule 7 shall be accompanied by a rough plan and approximate estimate of the cost, and a statement of the amount of local contribution.

10. The Board, if necessary, may itself buy or cause to be acquired land for a school under the provisions of the Land Acquisition Act, 1894, and make over the land for use by the school under a license in the form prescribed by Government.

11. Payment of capital grants may be made in one or more instalments, but no instalment shall be paid until the whole of the local contribution, if this is in money, is paid into a bank approved by the Board, and the final instalment of a grant for the building or repairs shall not be paid until the work is finished according to plan, and a certificate to that effect from a competent authority received by the Board.

12. Grants for furniture and appliances shall not be paid until vouchers for the amount have been received by the Board.

Recurring grants.

13. The Board shall be competent to sanction a recurring grant to a primary school under private management to meet expenditure on—

(*a*) rent of land or building occupied by the school;

(*b*) salaries of teachers of the school;

(*c*) upkeep and ordinary repairs of school buildings and lands;

(*d*) miscellaneous items including the buying of books for the school;

(*e*) any other item approved by the Local Government.

14. The Board shall before sanctioning a recurring grant to a school fix an "approved scale of expenditure" for the school under the heads mentioned in rule 13, and the grant shall not, except for reasons to be stated in writing, exceed the difference between this approved scale and the total income of the school from other sources including fees.

Provided that the conditions laid down in this rule may be relaxed by the Board with the previous approval of the Director of Public Instruction.

15. The "approved" pay of teachers in a school shall be—

Head Master—Rs. 20.

Trained teacher—Rs. 15.

Untrained teacher—Rs. 10.

and the approved scale of expenditure on salaries of teachers shall depend upon the number of pupils in the school. Each school shall have at least two trained teachers on its staff, and, where the number of pupils exceeds 50, the Board may allow for the pay of additional teachers in the approved scale.

Provided that the conditions laid down in this rule may be relaxed by the Board with the previous approval of the Director of Public Instruction.

16. The "approved" grant to a school for the purpose of upkeep and ordinary repairs of its buildings and land shall not ordinarily exceed one-fortieth of the total expenditure of the school.

17. The "approved" grant to a school for miscellaneous items including the buying of books shall not exceed one-fortieth of the total expenditure of the school

18. Recurring grants are payable quarterly in arrears on the first day of the months of March, June, September and December, and on production by the managing authority of the school of a certificate that the salaries of the teachers have been paid for the preceding quarter.

19. The Board shall be competent to sanction a recurring grant to a school for a period of one year only, but the Board may renew the grant yearly up to a total period of five years, provided that—

(*a*) the managing authority of the school certify at the end of each year that the grant given to the school during the preceding year has been fully and properly expended;

(*b*) the Board may increase or decrease the grant (subject to the provision of rule 14) if altered circumstances of the school justify such a course.

20. The Board shall not renew a recurring grant to a school beyond the period of five years unless the school applies for the renewal, and such application shall be dealt with as if it were an original application.

21. The Board shall refuse to make a further grant to a school, the recognition of which is withdrawn by the Board, from the date from which recognition is so withdrawn.

22. (*i*) If the Board has reason to believe that a school in receipt of a recurring grant is not fulfilling the condition on which the grant is given, it shall cause the school to be inspected by an inspecting officer of the Department of Public Instruction, call for a report from such officer and, after considering the report, may either reduce the grant or refuse further grant as it deems necessary.

(*ii*) It shall be open to an inspecting officer of the Department of Public Instruction to submit to the Board at any time a report on a school in receipt of a recurring grant, and the Board shall deal with such a report as though the report had been called for by the Board

---

Registration.

NOTIFICATIONS.

Minister-in-charge: The Hon'ble Khan Bahadur M. Azizul Haque.

24-Parganas. No 486Regn. 30th July 1936. It is hereby notified for general information under section 5, sub-section (*3*) of the Indian Registration Act, XVI of 1908, that the revised jurisdiction of the registration sub-districts of Alipore, Baruipore and Sealdah, in the district of the 24-Parganas, as notified in this department notification No 3458T Regn , dated the 20th June 1936, will take effect from the 1st September 1936

Bakarganj. No 488Regn. 30th July 1936 In exercise of the power conferred by section 3 of the Bengal Muhammadan Marriages and Divorces Registration Act, 1876 (Bengal Act I of 1876), the Government of Bengal (Ministry of Education) are pleased to appoint Maulvi Muhammad Ishaque temporarily to be a Muhammadan Registrar within union Nos XII to XVIII of the police-station of Amtali, in the district of Bakarganj, during the absence, on leave, of Maulvi Habibur Rahman, or until further orders.

Bakarganj. No 489Regn 30th July 1936. In exercise of the power conferred by section 2 of the Kazis' Act, 1880 (Act XII of 1880), the Government of Bengal (Ministry of Education) are pleased to appoint Maulvi Muhammad Ishaque temporarily to be the Kazi for the celebration of marriages and the performance of other rites and ceremonies within union Nos XII to XVIII of the police-station of Amtali, in the district of Bakarganj, during the absence, on leave, of Maulvi Habibur Rahman, or until further orders.

H. GRAHAM,
Secy. to the Govt of Bengal.

Orders by the Inspector-General of Registration, Bengal.

Khulna. No 439 27th July 1936.—Babu Ramesh Chandra Mukherji, Sadar Joint Sub-Registrar of Khulna, is allowed leave on average pay for two weeks, under rule 81 (*b*) (*ii*) of the Fundamental Rules, in extension of the leave granted to him in this department notification No. 425, dated the 18th July 1936

Murshidabad. – No. 440 — 27th July 1936.—Maulvi Md Mazharul Huq, Sub-Registrar attached to the Sadar Registration office at Berhampore in the district of Murshidabad, is allowed leave for six months, viz., leave on average pay for one month and one day, under rule 81 (*b*) (*ii*) of the Fundamental Rules, with effect from the 1st June 1936, and extraordinary leave without allowance for the remaining period, under rule 85 (*a*) of the same Rules

Noakhali. No 441 27th July 1936 Maulvi Habibur Rahman (I), 1st Joint Sub-Registrar of Lakshmipur at Raipur, in the district of Noakhali, is allowed leave on average pay for one month, under rule 81 (*b*) (*ii*) of the Fundamental Rules, with effect from the 1st August 1936, or any subsequent date on which he may be relieved

Khulna. No 442 28th July 1936 - Maulvi Ekramul Kabir, probationary Sub-Registrar, officiating as Sub Registrar of Kachua, in the district of Khulna, is allowed leave for ten days, viz , earned leave for nine days, under rule 9 of the Bengal Services (Revision of Leave) Rules, 1934, with effect from the 19th July 1936, and leave on medical certificate for the remaining period of one day, under rule 16 of the same rules

Jessore-Birbhum. No 443 28th July 1936 Babu Bimalapada Mukherji, Sub-Registrar of Jhenidah, in the district of Jessore, under orders of transfer to Labpur in the district of Birbhum, is allowed leave on average pay for one month and one day, under rule 81 (*b*) (*ii*) of the Fundamental Rules, in extension of the leave granted to him in this department notification No. 369, dated the 24th June 1936

Faridpur. No. 444 28th July 1936 - Babu Rai Mohan Mazumdar, Sub-Registrar of Gopalganj (Haridaspur), in the district of Faridpur, is allowed leave on average pay for two months, under rule 81(*b*)(*ii*) of the Fundamental Rules, with effect from the date on which he may be relieved

Faridpur.—No. 445.—28th July 1936. — Babu Kiran Chandra Maulik, Sub-Registrar attached to the Sadar Registration office at Faridpur, is appointed to be Sub-Registrar of Gopalganj in the same district.

Noakhali.—No. 446.—28th July 1936.—Maulvi Abul Khair Asadullah, 2nd Joint Sub-Registrar of Feni at Daganbhuiyan, in the district of Noakhali, is allowed leave on average pay for two months, under rule 81(*b*) (*ii*) of the Fundamental Rules, with effect from the 21st July 1936.

Tippera-Noakhali.—No. 447.—28th July 1936.—Maulvi A. B. Sharfuddin Ahmed, Sub-Registrar attached to the Sadar Registration office at Comilla, in the district of Tippera, is appointed to act as 2nd Joint Sub-Registrar of Feni at Daganbhuiyan, in the district of Noakhali, during the absence, on leave, of Maulvi Abul Khair Asadullah, Sub-Registrar, or until further orders.

Midnapore.—No. 448.—29th July 1936.—Babu Jitendra Lal Basu, Sub-Registrar of Balichak, in the district of Midnapore, is appointed to be Sub-Registrar of Anandpur in the same district.

Midnapore.—No. 449.—29th July 1936.—Babu Sashi Bhusan Datta, Sub-Registrar of Anandpur, in the district of Midnapore, is appointed to be Sub-Registrar of Balichak in the same district.

Dinajpur.—No. 450.—29th July 1936.—Maulvi Amiruddin Ahmed, Sub-Registrar of Thakurgaon, in the district of Dinajpur, under orders of transfer to Raiganj in the same district, is allowed leave on average pay for one month, under rule 81(*b*)(*ii*) of the Fundamental Rules, with effect from the 13th July 1936.

Dinajpur.—No. 451.—29th July 1936.—Babu Ananda Mohan Roy, probationary Sub-Registrar attached to the Sadar Registration office at Dinajpur, is appointed to act as Sub-Registrar of Raiganj in the same district, during the absence, on leave, of Maulvi Amiruddin Ahmed, Sub-Registrar, or until further orders.

Jessore.—No. 452.—30th July 1936.—Maulvi Abdul Wajid (No. II), officiating Sub-Registrar of Manirampur, in the district of Jessore, is allowed leave on average pay for one month, under rule 81 (*b*) (*ii*) of the Fundamental Rules, with effect from the date on which he may be relieved.

24-Parganas-Jessore.—No. 453.—30th July 1936.—Babu Sudhir Kumar Biswas, Sub-Registrar attached to the Sadar Registration office at Alipore, 24-Parganas, is appointed to act, until further orders, as Sub-Registrar of Manirampur, in the district of Jessore.

Mymensingh.—No. 454.—30th July 1936.—Babu Harry Ballav Chaudhury, Sub-Registrar of Kalihati, in the district of Mymensingh, is allowed leave on average pay for six days, under rule 81 (*b*) (*ii*) of the Fundamental Rules, with effect from the 7th September 1936.

Khulna.—No. 455.—30th July 1936.—This department notification No. 402, dated the 6th July 1936, appointing Babu Saurindra Nath Sen, officiating Sub-Registrar of Kalarca, in the district of Khulna, to act as Sub-Registrar of Paikgacha in the same district, is cancelled.

Hooghly-Khulna.—No. 456.—30th July 1936.—Babu Sailendra Nath Sil, Sub-Registrar attached to the Sadar Registration office at Chinsura, Hooghly, is appointed to act, until further orders, as Sub-Registrar of Paikgacha, in the district of Khulna.

Mymensingh.—No. 457.—31st July 1936.—Maulvi Muhammad Jalaluddin, officiating 1st Joint Sub-Registrar of Tangail at Pakulla, in the district of Mymensingh, is allowed leave on average pay for twenty-five days, under rule 81 (*b*) (*ii*) of the Fundamental Rules, with effect from the 2nd September 1936.

Midnapore.—No. 458.—31st July 1936.—Babu Sachindra Nath Mitra, Sub-Registrar of Narayangarh, in the district of Midnapore, is allowed leave on average pay for two months, under rule 81(*b*) (*ii*) of the Fundamental Rules, with effect from the date on which he may be relieved.

24-Parganas-Midnapore.—No. 459.—31st July 1936.—Babu Sudhindriya Banarji, officiating Sub-Registrar of Basirhat, in the district of the 24-Parganas, is appointed to act as Sub-Registrar of Narayangarh, in the district of Midnapore, during the absence, on leave, of the permanent incumbent, or until further orders.

S. CHATTERJEA,
Inspector-General of Regn., Bengal.

COMMERCE DEPARTMENT.

Orders by the Registrar of Joint Stock Companies, Bengal.

Calcutta, the 27th July 1936.

In the matter of the Indian Companies Act, 1913 (VII of 1913), and in the matter of Mannalall Fatehchand, Ltd.

Notice is hereby given that the name of Mannalall Fatehchand, Ltd., has this day, in pursuance of section 247 of the Act, been struck off the register and that the company is dissolved.

N. K. MAJUMDER,
Registrar, Joint Stock Companies.

Calcutta, the 27th July 1936.

In the matter of the Indian Companies Act, 1913 (VII of 1913), and in the matter of Sarail Real Property and Agriculture, Ltd.

Notice is hereby given that, on the expiration of three months from date, the name of Sarail Real Property and Agriculture, Ltd., will, unless cause is shown to the contrary, be struck off the register, and the company will be dissolved.

In the matter of the Indian Companies Act, 1913 (VII of 1913), and in the matter of Reform Taxi Cab Co., Ltd.

Notice is hereby given that, on the expiration of three months from date, the name of Reform Taxi Cab Co., Ltd., will, unless cause is shown to the contrary, be struck off the register, and the company will be dissolved.

In the matter of the Indian Companies Act, 1913 (VII of 1913), and in the matter of Shree Mahaluxmi Mining Syndicate, Ltd.

Notice is hereby given that, on the expiration of three months from date, the name of Shree Mahaluxmi Mining Syndicate, Ltd., will, unless cause is shown to the contrary, be struck off the register, and the company will be dissolved.

In the matter of the Indian Companies Act, 1913 (VII of 1913), and in the matter of Bengal Central Insurance, Ltd.

Notice is hereby given that, on the expiration of three months from date, the name of Bengal Central Insurance, Ltd., will, unless cause is shown to the contrary, be struck off the register, and the company will be dissolved.

In the matter of the Indian Companies Act, 1913 (VII of 1913), and in the matter of the Rural Water Supply and Fishery Co., Ltd.

Notice is hereby given that, on the expiration of three months from date, the name of the Rural Water Supply and Fishery Co., Ltd., will, unless cause is shown to the contrary, be struck off the register, and the company will be dissolved.

N. K. MAJUMDER.
Registrar of Companies under Act VII of 1913.

MARINE DEPARTMENT.

NOTIFICATION.

No. 21Mne. 30th July 1936.—The following draft of an amendment, which, in exercise of the power conferred by section 19 of the Inland Steam Vessels Act, 1917 (1 of 1917), the Governor in Council proposes to make in the rules published under this department notification No. 50Mne., dated the 22nd November 1930, as amended by notification No. 7Mne., dated the 26th January 1933, is published, as required by section 74 of the Act, for the information of persons likely to be affected thereby.

The draft amendment will be taken into consideration on or after the 6th September 1936, and any objection or suggestion with regard thereto received by the undersigned before that date will be considered:—

Draft amendment.

For the existing "Form No. 4B. Certificate of Survey" appended to the said rules, *substitute* the following "Form No. 4B.—Certificate of Survey":—

Form No. 4B.

No.

Certificate of Survey.

ISSUED UNDER ACT I OF 1917 BY THE GOVERNMENT OF BENGAL.

For an inland passenger motor-vessel authorised to ply by day or, if the vessel is fitted with a searchlight, up to 10 p.m. on voyages not exceeding six hours and in smooth waters only.

Motor-vessel.....

Owner, Managing Owner or Agent.....

Where surveyed.	Gross tonnage.	Name of master and No. of his certificate.

NUMBER OF PASSENGERS.

This motor-vessel is, according to the declaration of the Ship-Surveyor, fit to carry when there is no encumbrance of passenger accommodation :—

Clear areas. (1)	On voyages which terminate before dark. (2)	On voyages which continue after dark but terminate by 10 p.m. (3)
	Passengers.	Passengers.
Forward		
Amidships		
Aft		
Total ..		

Two Children under 12 YEARS OF AGE to be reckoned as one passenger.

The carriage of cattle is prohibited.

If the space measured for passenger accommodation is occupied by luggage or other articles.

On voyages which terminate before dark.	For every 3 superficial feet so occupied.	One passenger.	Is to be deducted from the number above stated.
On voyages which continue after dark up to 10·00 p.m.	For every 4 superficial feet so occupied.		

LIFE BUOYS AND FIRE EQUIPMENT.

Required to be carried by this vessel.

Buoyant apparatus ..	Fit and ready for use.	Fire extinguishers.
Buoys		Fire buckets.
		Sand boxes.

THIS IS TO CERTIFY that the provisions of the law with respect to the survey of the abovementioned motor-vessel and the transmission of declaration in respect thereof, have been complied with.

Signed by order of the Government of Bengal,

This day of 19 .

Examined and Registered.

CAPTAIN, R. I. N.

Principal Officer, Mercantile Marine Department, Calcutta District.

Nautical Surveyor, Chittagong.

No vessel plying with this certificate will be permitted to carry passengers under columns 2 and 3 at the same time.

This certificate, unless previously cancelled or revoked, to be in force until the day of 19 .

If the vessel is then out of a place of survey, she must be surveyed and have a new certificate before she first begins to ply after her next subsequent return to a place of survey.

Either this certificate or the duplicate thereof, furnished by the Port Office, is to be put up in a conspicuous part of the vessel, where it will be visible to all persons on board the same.

If the number of passengers carried exceeds the number stated in this certificate, the Master and Owner shall, for every passenger over and above that number, be each liable to a fine which may extend to ten rupees.

In case of any accident occasioning loss of life, or any material damage affecting the seaworthiness or efficiency of the vessel, either in the hull or in any part of the machinery, a report by letter, signed by the Owner or the Master, is to be forwarded to the Principal Officer, Mercantile Marine Department, Calcutta / Nautical Surveyor, Chittagong, within 24 hours after the happening of the accident, or as soon thereafter as possible.

E. N. BLANDY,

Secy. to the Govt. of Bengal.

PUBLIC WORKS DEPARTMENT.

Establishment.

NOTIFICATIONS.

Minister-in-charge: The Hon'ble Nawab Sir Mohiuddin Faroqui, Kt., of Ratanpur.

No. 32.—27th July 1936. Mr. Suresh Chandra Chatarji, I.S.E., Executive Engineer, Hijli Division in the Central Circle, is transferred in the interest of the public service and appointed Personal Assistant to Chief Engineer, until further orders.

No. 33.—27th July 1936.—Rai Sahib Manmohan Sen Gupta, Bengal Senior Service of Engineers, Executive Engineer, Personal Assistant to Chief Engineer, is transferred in the interest of the public service and posted to the Hijli Division in the Central Circle, *vice* Mr. S. C. Chatarji, transferred, until further orders.

No. 34.—29th July 1936.—In supersession of this department notification No. 10T., dated the 18th May 1936, Mr. Phanindra Chandra Roy, temporary Assistant Engineer, Chittagong Division, was allowed leave for one month and eleven days, with effect from the 1st June 1936, viz., earned leave (on leave salary equal to pay) for fifteen days, under rule 11(*a*) of the Bengal Services (Revision of Leave) Rules, 1934, and extraordinary leave (without any leave salary) for the remaining period, under rule 17(*a*) of those rules.

Railway.

NOTIFICATION.

Minister-in-charge: The Hon'ble Nawab Sir Mohiuddin Faroqui, Kt., of Ratanpur.

No. 8R.—28th July 1936. The following draft of rules, which, in exercise of the power conferred by clause (*p*) of sub section (*2*) of section 42 of the Bengal Aerial Ropeways Act, 1923 (Bengal Act VII of 1923), the Government of Bengal (Ministry of Public Works) propose to make, is published for the information of persons likely to be affected thereby.

2. The draft rules will be taken into consideration on or after 15th September 1936, and any objections or suggestions with respect thereto received by the undersigned before that date will be duly considered.

3. Notification No. 3R., dated 4th December 1935, published at page 2508 of the *Calcutta Gazette* of the 12th idem, is hereby cancelled :—

Draft Rules.

1. Whenever any person applies to the Local Government under sub-section (*3*) of section 41 for the revision of an order made by it under section 7 or section 21, such person shall pay with his application a fee of Rs. 50 which shall under no circumstance be refundable.

2. Such person shall also pay a further fee of Rs. 250 under sub-section (*4*) of section 41 if a further enquiry by the Advisory Board is considered necessary to enable the Board to tender their advice to the Local Government on the said application under sub-section (*3*) of the said section.

3. Such person shall also pay a further fee equivalent to the travelling expenses, if any, payable to the members of the Advisory Board or to any one of them under the Fundamental and Subsidiary Rules, to enable them to advise under sub-section (*3*) of section 41 or to make the further enquiry under sub-section (*4*) of the said section. The amount of fee payable on account of such travelling expenses shall be determined by the Local Government.

4. In the event of non-utilization of the whole or portion of the fees payable under rule 3, a refund to the extent of the amount not thus utilized may be obtained with the sanction of the Local Government.

5. All fees payable under the foregoing rules shall be paid into a Government Treasury and the receipt therefor submitted to the Local Government unless otherwise directed by special or general order of the Local Government.

6. All fees payable under rules 2 and 3 shall be paid within fourteen days from the date when the amount required is notified to the applicant. In the event of failure to deposit such fees within the specified time, the Local Government reserves the right to stop further proceedings, and forfeit all fees previously paid for the purpose of such enquiry.

H. S. E. STEVENS,
Secy. to the Govt. of Bengal.

DEPARTMENT OF AGRICULTURE AND INDUSTRIES.

Agriculture.

NOTIFICATION.

Minister-in-charge: The Hon'ble Nawab Sir Mohiuddin Faroqui, Kt., of Ratanpur.

No. 4848 Agri.—25th July 1936.—In exercise of the powers conferred by section 23 of the Bengal Water Hyacinth Act, 1936 (Bengal Act XIII of 1936), the Government of Bengal (Ministry of Agriculture) are pleased to make the following rules :—

Bengal Water Hyacinth Rules.

Short Title.

1. These rules may be called the Bengal Water Hyacinth Rules, 1936.

Definitions.

2. In these rules "the Act" means the Bengal Water Hyacinth Act, 1936.

Publication of notifications prohibiting water hyacinth in certain areas (section 7).

3. A notification issued under section 7 shall be published in the following manner :—

(*a*) copies shall be hung up in the office of the Collector of the district and in the offices of any Subdivisional Officer, District Judge, Munsif or Sub-Registrar within whose jurisdiction the area specified in the notification or any part thereof is situated ; and

(*b*) the fact that such notification has been thus published shall be announced by beat of drum or other customary manner in such places in that area as the Collector may think fit.

Service of notice to occupier to cut branches or remove vegetation (section 8).

4. A notice under section 8 shall be served in any of the following ways :—

(*a*) a copy may be tendered or delivered to the occupier by or in the presence of the authorised officer who has signed it, and such authorised officer shall record on the original notice a note that this has been done, or

(*b*) a copy may be served in the manner laid down in rule 179 of the Bengal Practice and Procedure Manual ; or

(*c*) a copy may be served through the union board in whose jurisdiction the occupier resides, in the manner laid down for the service of processes by duffadars and chaukidars under the Bengal Village Self-Government Act, 1919.

Rate at which interest may be recovered on costs under section 12.

5. The rate at which interest may be realised on costs due under section 12 shall be 6¼ per cent.

Publication of schemes and service of notices under section 15.

6. A scheme under section 15 shall be published in the manner laid down for notification in rule 3.

7. Notices under section 15 shall be served in the manner laid down in rule 4.

Notice regarding use of land for destruction of water hyacinth (section 16).

8. A notice under section 16 shall be served in the manner laid down in clause (*b*) or clause (*c*) of rule 4.

Removal and destruction of water hyacinth.

9. Subject to the provisions of the Act water hyacinth may be removed in any manner convenient, provided that no plant or part of a plant shall be permitted to remain on any spot between the place from which it is removed and the place where it is to be destroyed.

10. When water hyacinth is to be destroyed it shall be destroyed in any of the following ways :—

(*a*) without being first dried, it may be—

(*i*) rotted in stacks on dry ground, or

(*ii*) rotted in stacks under water, or

(*iii*) utilised for the preparation of compost, or

(*iv*) destroyed by chemical sprays : or

(*b*) after being first dried, it may be—

(*i*) burnt, or

(*ii*) rotted in stacks on dry ground, or

(*iii*) utilised for the preparation of compost.

11. (*1*) Water hyacinth shall be stacked for rotting on dry ground at a distance of not less than fifteen feet from any stream or channel that may contain water or from any place where standing water may accumulate.

(*2*) When water hyacinth is stacked for rotting on dry ground, any plant that shows any sign of putting out new shoots or taking root in the stack or in the ground shall at once be turned over and buried within the stack.

12. Except when it is to be utilised for the preparation of compost, no water hyacinth that has been stacked for rotting on dry ground shall be removed from the stack until all the water hyacinth in the stack has completely disintegrated.

13. Water hyacinth that is stacked for rotting under water shall be secured by bamboo stakes or other adequate means against being carried away by the water, and shall be so stacked that no part of any leaf is exposed to the air above water.

14. Water hyacinth may be utilised for the preparation of compost after being mixed with suitable proportions of withered vegetable matter, such as leaves, weeds, grass, jute waste, or sugarcane pith, or with straw, chaff or wood-ashes.

15. Water hyacinth shall be dried by being spread out, with the roots uppermost, on dry ground at a distance of not less than fifteen feet from any stream or channel that may contain water or from any place where standing water may accumulate.

16. When water hyacinth has been destroyed by burning, any residue other than ashes shall be buried beneath not less than one foot of earth which shall be beaten or rammed hard above it, and the ashes shall either be thus buried or be dug into soil for the purpose of cultivation.

Forests.

NOTIFICATION.

No. 967For.—28th July 1936.—In exercise of the powers conferred by clause (*i*) of sub-section (*1*) of section 26 of the Indian Forest Act, 1927 (XVI of 1927), the Governor in Council is pleased to make the following amendment in the rules to regulate hunting, shooting, fishing, the poisoning of water and the setting of traps or snares within the reserved and protected forests in the Presidency of Bengal, published under notification No. 839For., dated the 23rd January 1915, as subsequently amended :—

Amendment.

Add the following as a new paragraph to rule 8 of the said rules :—

"In areas leased to shooting and fishing clubs, the Honorary Secretaries of such clubs shall provide the officers exempted under this rule from taking out permits, with free passes and copies of the club rules, provided that such passes shall be issued without the officers having to apply for them and further that the omission to issue a pass will not affect the officers' privileges under the rules in any way."

H. S. E. STEVENS,
Secy. to the Govt. of Bengal.

Orders by the Director of Industries, Bengal.

No. 86.—28th July 1936.—Rai Sahib S. N. Bose, Superintendent of Sericulture, Malda, is allowed leave on average pay for four months, under rule 81(*b*) (*ii*) of the Fundamental Rules, with effect from the 9th July 1936.

A. T. WESTON,
Director of Industries, Bengal.

REVENUE DEPARTMENT.

Land Revenue.

NOTIFICATIONS.

Calcutta.—No. 10880L.R.—28th July 1936.—Under section 3 of the Calcutta Survey Act, 1887 (Act I of 1887), Rai Bijay Bihari Mukharji Bahadur, officiating Director of Land Records and Surveys, Bengal, is appointed to be the Superintendent of Surveys for the purpose of carrying out the survey directed to be made under Government notification No. 13069L.R., dated the 7th December 1926.

Mymensingh.—No. 11050L.R.—31st July 1936.—In exercise of the power conferred by sub-section (*2*) of section 49A of the Bengal Tenancy Act, 1885 (VIII of 1885), as amended by the Bengal Tenancy (Amendmemt) Act, 1918 [Act II (B. C.) of 1918], the Governor in Council is pleased to declare that the provisions of Chapter VIIA of the said Act shall apply to the following aboriginal castes or tribes living in the district or local area specified below, and that such castes or tribes shall be deemed to be aboriginals for the purposes of the said chapter :—

Caste or tribe.	District or local area.
Garos, Hadis, Hajangs and Kochs.	Police-stations Dewanganj and Sribardi in the district of Mymensingh.

Dacca.—No. 11054 L.R.—31st July 1936.—In exercise of the powers conferred by section 3 of the Bengal Land Revenue Settlement Regulation, 1825 (IX of 1825), read with section 20 of the Bengal Land Revenue Settlement Regulation, 1822 (VII of 1822), the Governor in Council is pleased to vest Babu Prafulla Chandra Moulik, Settlement Kanungo, who has, by notification No. 9882 C.P., dated the 17th July 1936, been vested by the Board of Revenue with the powers of a Collector in the estate of Lala Brojendra Kumar Bose, in the district of Dacca, for the purpose of the work of maintenance of the record-of-rights of that estate, with powers under section 19 of the said Bengal Land Revenue Settlement Regulation, 1822, within the local limits of that estate, to require and compel persons mentioned in the section to attend and produce accounts and other papers and to examine such persons under that section for the purpose of the said work of maintenance of the record-of-rights.

Howrah.—No. 11061L.R.—31st July 1936.—Babu Phanindra Kumar Banerjee, Sub-Deputy Collector and Assistant Settlement Officer, Howrah, is allowed leave on average pay, under rule 81 (*b*) (*ii*) of the Fundamental Rules, for one month and seventeen days, with effect from the 1st September 1936 or any subsequent date on which he is relieved of his present duties.

Khulna.—No. 11083L.R.—1st August 1936.—In exercise of the power conferred by sub-section (*3*) of section 158A of the Bengal Tenancy Act, 1885 (VIII of 1885), the Governor in Council is pleased to appoint for the purpose of that section, Babu Upendra Chandra Dutt, Deputy Magistrate and Deputy Collector, Khulna, to perform the functions of a Certificate Officer under the Bengal Public Demands Recovery Act, 1913 (Bengal Act III of 1913), for the recovery of arrears of rent (including cesses) due to the estates named below in the district of Khulna :—

1. Estate of Sm. Krishna Pramada Dasi.
2. Estate of Babu Hemendra Nath Rai Chaudhury (Satkhira 6 annas).
3. Estate of Babu Sreemanta Chatterjee.
4. Estate of Kumar Narendra Nath Mitra.
5. Estate of Rai J. K. Ghosh Bahadur.
6. Estate of Babu D. P. Roy Chowdhury.
7. Estate of Babu B. Sircar.

Rangpur-Bakarganj.—No. 11181L.R.—3rd August 1936.—Mr. Abanibhushan Chattarji, I.C.S., Joint Magistrate and Deputy Collector, employed as Assistant Settlement Officer in the district of Rangpur, is, in the interest of public service, appointed to be an Assistant Settlement Officer in the district of Bakarganj, with effect from the date on which he joins his settlement duties in that district.

Bakarganj.—No. 11182L.R.—2nd August 1936.—Under the provisions of section 3(*14*) of the Bengal Tenancy Act, 1885 (Act VIII of 1885), Mr. Abanibhushan Chattarji, I.C.S., Joint Magistrate and Deputy Collector, is authorised to discharge, in the district of Bakarganj, the functions of a Revenue Officer, under Chapter X of that Act, so far as they relate to surveys and the preparation of record-of-rights.

He is also vested with the powers of an Assistant Settlement Officer, under Chapter VII, Part I, of the rules under the Bengal Tenancy Act, in respect of the aforesaid area.

Malda. — No. 11178L.R. — 3rd August 1936.—In exercise of the power conferred by sub-section (*1*) of section 3 of the Bengal Agricultural Debtors Act, 1935 (Bengal Act VII of 1936), the Governor in Council is pleased to establish a Special Debt Settlement Board, which shall be known as the Malda Special Debt Settlement Board, in the Malda district, for the local areas specified in notification No. 10120L.R., dated 14th July 1936.

In exercise of the power conferred by sub-section (*2*) of section 3 of the said Act the Governor in Council is pleased to appoint the undermentioned persons to be Chairman and members respectively of the said Board for a term of three years with effect from 15th August 1936.

In exercise of the power conferred by section 7 of the said Act the Governor in Council is pleased to empower the said Board to exercise powers under sub-section (*2*) of section 9, sub-section (*2*) of section 13, clause (*b*) of sub-section (*1*) of section 19, and section 21 of the said Act:—

1. The Subdivisional Magistrate, Malda, *ex-officio*, Chairman and member.

Members.

2. Rai Sahib Jadunandan Choudhuri.
3. Maulvi Emaduddin.
4. Maulvi Muhammad Illyas.
5. Babu Amarendra Krishna Bhaduri.

Pabna. — No. 11179L.R. — 3rd August 1936.—In exercise of the power conferred by sub-section (*1*) of section 3 of the Bengal Agricultural Debtors Act, 1935 (Bengal Act VII of 1936), the Governor in Council is pleased to establish a Special Debt Settlement Board, which shall be known as the Sadar Special Debt Settlement Board, in the Pabna district, for the local areas specified in notification No. 10118L.R., dated 14th July 1936.

In exercise of the power conferred by sub-section (*2*) of section 3 of the said Act the Governor in Council is pleased to appoint the undermentioned persons to be Chairman and members respectively of the said Board for a term of three years with effect from 15th August 1936.

In exercise of the power conferred by section 7 of the said Act the Governor in Council is pleased to empower the said Board to exercise powers under sub-section (*2*) of section 9, sub-section (*2*) of section 13, clause (*b*) of sub-section (*1*) of section 19, and section 21 of the said Act:—

1. The Senior Deputy Magistrate, Pabna, *ex-officio*, Chairman and member.

Members.

2. Maulvi Muhammad.
3. Maulvi Muhammad Khaliluddin Khan.
4. Babu Narendra Krishna Talukdar.
5. Babu Prasanna Kumar Dutta.

Pabna. — No. 11180L.R. — 3rd August 1936.—In exercise of the power conferred by sub-section (*1*) of section 3 of the Bengal Agricultural Debtors Act, 1935 (Bengal Act VII of 1936), the Governor in Council is pleased to establish a Special Debt Settlement Board, which shall be known as the Sirajganj Special Debt Settlement Board, in the Pabna district, for the local areas specified in notification No. 10119L.R., dated 14th July 1936.

In exercise of the power conferred by sub-section (*2*) of section 3 of the said Act the Governor in Council is pleased to appoint the undermentioned persons to be Chairman and members respectively of the said Board for a term of three years with effect from 15th August 1936.

In exercise of the power conferred by section 7 of the said Act the Governor in Council is pleased to empower the said Board to exercise powers under sub-section (*2*) of section 9, sub-section (*2*) of section 13, clause (*b*) of sub-section (*1*) of section 19, and section 21 of the said Act:—

1. The Subdivisional Officer, Sirajganj, *ex-officio*, Chairman and member.

Members.

2. Khan Sahib Maulvi Syed Akbar Ali.
3. Khan Bahadur Maulvi Wahidulla.
4. Rai Pranesh Chandra Sen Bahadur.
5. Babu Surendra Kumar Roy.

ERRATUM.

No. 11013L.R.—30th July 1936.—In notification No. 10420L.R., dated the 20th July 1936, published at page 1764 of Part I of the *Calcutta Gazette* of 23rd July 1936, *read* the word "payment" *for* the word "receipt" in the heading of column 9 of Form XX.

Land Acquisition.

NOTIFICATIONS.

Hooghly. — No. 10883L.A.—28th July 1936. — Babu Sudhir Kumar Mazumdar, Sadar Subdivisional Officer, Hooghly, is vested with the powers of a Collector under the Land Acquisition Act, I of 1894, in that subdivision.

24-Parganas. — No. 10885L.A. — 28th July 1936.—The Governor in Council is pleased to cancel the notification No. 14428L.A., dated the 29th August 1935, under section 4 of the Land Acquisition Act, I of 1894, published at page 1681, Part I of the *Calcutta Gazette* of the 5th September 1935, in respect of the proposed acquisition of 0·0165 of an acre of land required by the Baranagar Municipality for converting a common passage into a municipal passage in the village of Baranagar, jurisdiction list No. 5, thana Baranagar, pargana Calcutta, district 24-Parganas.

Hooghly.—No. 11146L.A.—3rd August 1936.—The Governor in Council is pleased to cancel so much of the notification No. 3430-L.A., dated the 4th March 1935, published under section 4, Act I of 1894, at pages 490-91, Part I of the *Calcutta Gazette* of the 7th idem, as relates to the acquisition of 0·099 of an acre out of the total area of 2·805 acres of land for hospital building in the village of Bhanderhati, jurisdiction list No. 119, thana Dhaniakhali, pargana Baligori, district Hooghly.

Midnapore.—No. 11152L.A.—3rd August 1936.—Whereas it appears to the Governor in Council that land is likely to be required to be taken by Government at the expense of the district board of Midnapore for a public purpose, viz., for Sutahata Dispensary Approach road in the village of Sutahata, jurisdiction list No. 88, thana Sutahata, pargana Dorodubnan, district Midnapore, it is hereby notified that for the above purpose a piece of land comprising portions of settlement plots Nos. 369, 371 and 372, and measuring, more or less, 0·07 of an acre, is likely to be required within the aforesaid village of Sutahata.

This notification is made, under the provisions of section 4 of Act I of 1894, to all whom it may concern.

A plan of the land may be inspected in the office of the Subdivisional Officer, Tamluk.

In exercise of the powers conferred by the aforesaid section, the Governor in Council is pleased to authorise the officers for the time being engaged in the undertaking, with their servants and workmen, to enter upon and survey the land and do all other acts required or permitted by that section.

Any person interested in the above land, who has any objection to the acquisition thereof, may, within thirty days after the date on which public notice of the substance of this notification is given in the locality, file an objection in writing before the Land Acquisition Officer of Tamluk.

24-Parganas.—No. 11158L.A.—3rd August 1936.—The Governor in Council is pleased to cancel the notification No. 14817L.A., dated the 4th September 1935, under section 4 of the Land Acquisition Act, I of 1894, published at page 1739, Part I of the *Calcutta Gazette* of the 12th idem, in respect of the proposed acquisition of 0·2273 of an acre of land comprising portions of cadastral plots Nos. 1146, 1150, 1149, 1152, 1190, 1153, 1192 and 1108, required by the Taki Municipality for the diversion of Mahesh Babu road in Ward No. I of the municipality, in the village of Taki, jurisdiction list No. 51, thana Hasnabad, pargana Agarpara, district 24-Parganas.

Mymensingh.—No. 11161L.A.—3rd August 1936.—Mr. E. R. Kitchen, I.C.S., Subdivisional Officer, Jamalpur, district Mymensingh, is vested with the powers of a Collector under the Land Acquisition Act, I of 1894, in that subdivision.

Chittagong.—No. 11172L.A.—3rd August 1936.—The Governor in Council is pleased to cancel so much of the notification No. 4142-L.A., dated the 14th March 1936, published at page 556, Part I of the *Calcutta Gazette* of the 19th idem, in respect of the proposed acquisition of 2·21 acres of land required for the construction of a bridge over the Dalu river in the villages of Lohagara, Adhunagar and Harina, police-station Satkania, district Chittagong, as relates to 0·02 of an acre of land comprising the revisional survey plot No. 2404 (part) of village Adhunagar.

ERRATUM.

No. 11175L.A.—3rd August 1936.—In lines 10 to 12 of the notification No. 4142-L.A., dated the 14th March 1936, published at page 556, Part I of the *Calcutta Gazette* of the 19th idem, in respect of the proposed acquisition of 2·21 acres of land required for the construction of a bridge over the Dalu river in the villages of Lohagara, Adhunagar and Harina, police-station Satkania, district Chittagong, *read* "Revisional survey plot No. 5245 and parts of revisional survey plot Nos. 5244, 5246, 5247 and 5248 of village Lohagara" *for* "parts of revisional survey plots Nos. 5244, 5245, 5246, 5247 and 5248 of village Lohagara".

DECLARATIONS.

Howrah. — No. 10888L.A. — 28th July 1936.— Whereas it appears to the Governor in Council that land is required to be taken by Government partly at the public expense and partly at the expense of the authorities of the Mission Girls' School at Jagannathpur for a public purpose, viz., for the construction of the Jagannathpur Mission Girls' School, in the village of Jagannathpur, pargana Balia, zilla Howrah, it is hereby declared that for the above purpose a piece of land measur-

ing, more or less, 0·924 of an acre, bounded on the—

North—By village road,

East—By bastu and pond of Sadhan Adok, Methar Adok and Prasad Karmakar's land,

South—By drain of Gopal Bhakta and Manindra Nath Sarkar's doba,

West—By pond and bank of Manindra Nath Sarkar and others,

is required within the aforesaid village of Jagannathpur.

This declaration is made, under the provisions of section 6 of Act I of 1894, to all whom it may concern.

A plan of the land may be inspected in the office of the Land Acquisition Collector of Ulubaria.

Birbhum.—No. 10891L.A.—28th July 1936.—Whereas it appears to the Governor in Council that land is required to be taken by Government at the expense of the district board, Birbhum, for a public purpose, viz., for the construction of Bamhundi-Gorapara Road in the village of Chowmandalpur, jurisdiction list No. 27, thana Illambazar, pargana Senbhum, district Birbhum, it is hereby declared that for the above purpose a piece of land comprising portions of the cadastral plot No. 69 and measuring, more or less, 0·20 of an acre, is required within the aforesaid village of Chowmandalpur.

This declaration is made, under the provisions of section 6 of Act I of 1894, to all whom it may concern.

A plan of the land may be inspected in the office of the Collector of Birbhum.

Calcutta.—No. 11047 L.A. 31st July 1936.—Whereas it appears to the Governor in Council that additional land is required to be taken by Government at the public expense for a public purpose, viz., for the reconstruction of the Tollygunge Bridge over Tolly's Nullah, in ward No. 27 of the Calcutta Municipality in the city of Calcutta, it is hereby declared that for the above purpose two pieces of land being portions of premises No. 74, Tollygunge Road and altogether measuring, more or less, 0·0053 of an acre, bounded on the

Plot A.

North—By the remaining portion of premises No. 74, Tollygunge Road,

East—By Tollygunge Road,

South and West—By Tollygunge Circular Road,

Plot B.

North and East—By the remaining portion of premises No. 74, Tollygunge Road,

South—By Tollygunge Circular Road,

West—By the portion of premises No. 74, Tollygunge Road, already declared for acquisition under declaration No. 9487 L.A., dated the 15th July 1935,

are required within the aforesaid ward No. 27 of the Calcutta Municipality in the city of Calcutta.

This declaration is made, under the provisions of section 6, Act I of 1894, to all whom it may concern.

A plan of the land may be inspected in the office of the Second Land Acquisition Collector at No. 5, Bankshall Street, Calcutta.

Noakhali.—No. 11056L.A. 31st July 1936.—Whereas it appears to the Governor in Council that land is required to be taken by Government at the expense of the Banchhanagore union board for a public purpose, viz., for a village play-ground, in the village of Samserabad, thana Lakshmipur, zilla Noakhali, it is hereby declared that for the above purpose a piece of land measuring, more or less, 1·22 acres comprising cadastral survey plot No. 1052, is required within the aforesaid village of Samserabad.

This declaration is made, under the provisions of section 6 of Act I of 1894 to all whom it may concern.

A plan of the land may be inspected in the office of the Collector of Noakhali.

Burdwan.—No. 11086L.A.—1st August 1936.—Whereas it appears to the Governor in Council that land is required to be taken by Government at the public expense for a public purpose, viz., for the 3rd mile to the 6th mile of distributary No. 11, branch canal, Damodar Canal Project, in the villages of Kapsor, Chandipur, Rajipur and Narjja, jurisdiction list Nos. 40, 41, 42 and 54, respectively, in thana Bhatar, parganas Mazafarsahi, Azmatsahi and Burdwan, district Burdwan, it is hereby declared that for the above purpose five pieces of land comprising parts of cadastral survey plot No. 2212 in mauza Kapsor, parts of cadastral survey plots Nos. 1963, 2191, and 3247 in mauza Chandipur, part of cadastral survey plot No. 1085 in mauza Rajipur, parts of cadastral survey plot Nos. 18, 19, 101 and 190 in mauza Narjja, and altogether measuring, more or less, 0·30 of an acre, are required within the aforesaid villages of Kapsor, Chandipur, Rajipur and Narjja.

This declaration is made, under the provisions of section 6 of Act I of 1894, to all whom it may concern.

A plan of the land may be inspected in the office of the Special Land Acquisition Officer, Burdwan, as well as in that of the Executive Engineer, Damodar Canal Division, Burdwan.

Burdwan.—No. 11089L.A.—1st August 1936.—Whereas it appears to the Governor in Council that land is required to be taken by Government at the public expense for a public purpose, viz., for approaches of the bridge at chainage 34 and 72 feet of distributary No 6L, main canal, Damodar Canal Project, in the village of Mandalgram, jurisdiction list No. 7, in thana Memari, pargana Shahabad, district Burdwan, it is hereby declared that for the above purpose a piece of land comprising parts of cadastral survey plot No. 7044, and measuring, more or less, 0·025 of an acre, is required within the aforesaid village of Mandalgram.

This declaration is made, under the provisions of section 6 of Act I of 1894, to all whom it may concern.

A plan of the land may be inspected in the office of the Special Land Acquisition Officer, Burdwan, as well as in that of the Executive Engineer, Damodar Canal Division, Burdwan.

Hooghly. — No. 11149L.A. — 3rd August 1936.—Whereas it appears to the Governor in Council that land is required to be taken by Government at the expense of the District Board of Hooghly for a public purpose, viz., for hospital building, in the village of Bhanderhati, jurisdiction list No. 80, thana Dhaniakhali, pargana Baligori, district Hooghly, it is hereby declared that for the above purpose a piece of land comprising cadastral plots Nos. 2425, 2426, 2427, 2823, 2834 and parts of plots Nos. 2109, 2111, 2113, 2417, 2418, 2423, 2830 and 2844 and measuring, more or less, 2·706 acres, is required within the aforesaid village of Bhanderhati.

This declaration is made, under the provisions of section 6 of Act I of 1894, to all whom it may concern.

A plan of the land may be inspected in the office of the Land Acquisition Officer of Hooghly.

Burdwan. — No. 11155L.A. — 3rd August 1936.—Whereas it appears to the Governor in Council that land is required to be taken by Government at the public expense for a public purpose, viz., for syphon aqueduct at chainage 15 and 15 feet of distributary No. 2A, Main Canal, Damodar Canal project, in the village of Potna, jurisdiction list No. 81, thana Galsi, pargana Burdwan, district Burdwan, it is hereby declared that for the above purpose two pieces of land comprising parts of cadastral survey plots Nos. 2865 and 3218 and altogether measuring, more or less, 0·04 of an acre, are required within the aforesaid village of Potna.

This declaration is made, under the provisions of section 6 of Act I of 1894, to all whom it may concern.

A plan of the land may be inspected in the office of the Special Land Acquisition Officer, Burdwan, as well as in that of the Executive Engineer, Damodar Canal Division, Burdwan.

Burdwan. — No. 11163L.A. — 3rd August 1936.—Whereas it appears to the Governor in Council that land is required to be taken by Government at the public expense for a public purpose, viz., for flush inlet and escape at mile 13 chainage 32 and 82 feet of Branch Canal, Damodar Canal project, in the village of Silakot, jurisdiction list No. 13, thana Bhatar, pargana Burdwan, district Burdwan, it is hereby declared that for the above purpose six pieces of land comprising parts of cadastral survey plots Nos. 356, 357, 977, 992 and 1028 and altogether measuring, more or less, 0·33 of an acre, are required within the aforesaid village of Silakot.

This declaration is made, under the provisions of section 6 of Act I of 1894, to all whom it may concern.

A plan of the land may be inspected in the office of the Special Land Acquisition Officer, Burdwan, as well as in that of the Executive Engineer, Damodar Canal Division, Burdwan.

Pabna. — No. 11166L.A. — 3rd August 1936.—Whereas it appears to the Governor in Council that land is required to be taken by Government at the public expense for a public purpose, viz., for trenching ground, in the village of Atharatakarpara, jurisdiction list No. 147, thana Sirajganj, pargana Barabaju, district Pabna, it is hereby declared that for the above purpose a piece of land comprising cadastral plots Nos. 1871, 1872, 1873, 1874, 1880 and 1881 and measuring, more or less, 1·01 acres, is required within the aforesaid village of Atharatakarpara.

This declaration is made, under the provisions of section 6 of Act I of 1894, to all whom it may concern.

A plan of the land may be inspected in the office of the Subdivisional Officer, Sirajganj.

Chittagong.—No. 11169L.A. — 3rd August 1936.—Whereas it appears to the Governor in Council that land is required to be taken by Government at the public expense for a public purpose, viz., for construction of a bridge over the Dalu River in the villages of Lohagara, Adhunagar and Harina police-station Satkania, zilla Chittagong, it is hereby declared that for the above purpose pieces of land comprising the revisional survey plots Nos. 5244 (part), 5248 (part), 5245, 5246 (part) and 5247 (part) of village Lohagara, revisional survey plots Nos. 2907 (part), 6 (part), 13, 2904 (part), 23 (part), 9 (part), 12 (part), 14 (part), 2501 (part) and 3(part) of village Harina and revisional survey plots Nos. 2401 (part), 2402 (part), 2353 (part), 2349 (part), 2350 (part), 2405 (part) and 2354 (part) of village Adhunagar and measuring, more or less, 2.19 acres, are required within the aforesaid villages of Lohagara, Harina and Adhunagar.

This declaration is made, under the provisions of section 6 of Act I of 1894, to all whom it may concern.

A plan of the land may be inspected in the office of the Collector of Chittagong.

Chittagong.—No. 11226 L.A.—4th August 1936.—Whereas it appears to the Governor in Council that land is required to be taken by Government at the public expense for a public purpose, viz., for the extension of landing ground for aeroplanes in the village of East Patenga, police-station Double Moorings, zilla Chittagong, it is hereby declared that for the above purpose pieces of land comprising the revisional survey plots Nos. 935, 936, 937, 950, 951, 954, 955, 990, 992, 1167, 1168, 1177, 1178, 1179, 1180, 1181, 1182, 1183, 1184, 1185, 1186, 1187, 1195, 1284, 1329, 1330, 1331, and parts of revisional

survey plots Nos. 758, 760, 868, 898, 900, 910, 911, 912, 913, 914, 915, 923, 924, 927, 928, 933, 934, 938, 939, 940, 941, 942, 949, 952, 956, 961, 962, 966, 967, 971, 972, 976, 977, 981, 982, 983, 984, 985, 986, 987, 988, 989, 991, 993, 994, 995, 997, 998, 1024, 1029, 1030, 1031, 1032, 1033, 1034, 1137, 1160, 1163, 1164, 1166, 1169, 1170, 1171, 1172, 1174, 1176, 1191, 1192, 1193, 1194, 1196, 1206, 1252, 1254, 1255, 1256, 1257, 1282, 1283, 1285, 1290, 1291, 1293, 1302, 1303, 1304, 1320, 1321, 1322, 1323, 1324, 1327, 1328, 1332, 1333, 1334, 1351, 1359 and 1360 and measuring, more or less, 54·32 acres, are required within the aforesaid village of East Patenga.

This declaration is made, under the provisions of section 6, Act I of 1894, to all whom it may concern.

A plan of the land may be inspected in the office of the Collector of Chittagong.

Excluded Area.

NOTIFICATION.

Chittagong Hill-tracts.—No. 11059 E.A.—31st July 1936.—In exercise of the power conferred by section 18 of the Chittagong Hill-tracts Regulation, 1900 (I of 1900), the Governor in Council is pleased to make the following amendment in the rules for the administration of the Chittagong Hill-tracts, published under notification No. 123 P.D., dated the 1st May 1900, at page 429, Part I of the *Calcutta Gazette* of the 2nd May 1900, as subsequently amended, namely :—

After rule 10 of the said rules *insert* the following as rule 10A :—

"No suit shall lie in the Chittagong Hill-tracts on account of credit sales when the aggregate amount of the claim exceeds twenty rupees."

J. B. KINDERSLEY,
Secy. to the Govt. of Bengal.

Excise.

Orders by the Commissioner of Excise and Salt, Bengal.

No. 27Exc. — 28th July 1936. — Babu Suresh Chandra Roy, temporary Inspector of Excise and Salt, was allowed privilege leave for fourteen days, with effect from 9th March 1935, under article 260 of the Civil Service Regulations.

No. 28Exc. — 28th July 1936. — Babu Nikhil Chandra Roy, temporary Inspector of Excise and Salt, now employed in Matches (Excise) work in Calcutta, is transferred to Chittagong in the public interest.

No. 29Exc.—28th July 1936.—Babu Phanindra Nath Muhuri, temporary Inspector of Excise and Salt, Chittagong, is transferred to Matches (Excise) work in Calcutta in the public interest, *vice* Babu Nikhil Chandra Roy, transferred.

A. S. LARKIN,
Commr. of Excise and Salt, Bengal (offg.).

IRRIGATION DEPARTMENT.

NOTIFICATIONS.

No. 12-I.—1st August 1936.—In exercise of the power conferred by clause (5) of section 2 of the Bengal Development Act, 1935 (Bengal Act XVI of 1935), and in supersession of the notification No. 2-I., dated the 20th January 1936, published at page 194, Part I of the *Calcutta Gazette* of the 23rd January 1936, the Governor in Council is pleased to declare the Damodar Canal to be an improvement work for the purposes of the said Act.

No. 13-I 1st August 1936.—Whereas in the opinion of the Governor in Council the Damodar Canal, which has been declared to be an improvement work and a full description of which is given and the object of which is stated below, has increased or is likely to increase the profits from the produce from agricultural land or to increase the outturn of such produce within the undermentioned area:

Now, therefore, in exercise of the power conferred by section 3 of the Bengal Development Act, 1935, (Bengal Act XVI of 1935), and in supersession of the notification No. 3-I., dated the 20th January 1936, published at pages 194-198, Part I of the *Calcutta Gazette* of the 23rd January 1936, the Governor in Council is pleased to declare his intention to impose an improvement levy within the said area.

II. Any objection or suggestion with regard to the above, which may be submitted to the undersigned within a fortnight from the date of publication of this notification in the *Calcutta Gazette*, will be duly considered:—

Damodar Canal Project.

(a) Description of the work.

General.—The Damodar Canal Project was designed and constructed to irrigate an area of 180,000 acres on the left bank of the Damodar river in the district of Burdwan. A measure of control of the water levels has been obtained by the construction of a weir with undersluices and a head regulator at Rondia

some 30 miles west of the town of Burdwan. The water so controlled flows through a canal system and is passed on to the land through permanent outlets to irrigate the crops by flowing from field to field.

The total length of canals on the system is 232 miles 1,160 feet.

Headworks.—The headworks are situated at Rondia and consist of a weir wall with three river sluices (usually called undersluices) and a head regulator with the usual abutments, guide banks and flood bunds.

The weir is 3,750 feet long and is designed to raise the ordinary low water levels by 9½ feet. The three undersluices are each 60 feet wide and are situated on the left bank of the river in continuation of the weir wall and their purpose is to ensure that the main thread of the current shall pass close to the canal offtake.

Control is obtained by Stoney's sluice-gates 60 feet wide and 8½ feet high. The gates are counterbalanced and operated by hand winches.

The head regulator is a sluice with five vents 20′ × 4½′ each in size and are designed to pass 2,000 cusecs of the river water into the canal system.

The controlling gates are of a type known as the "rising cill" which means that when the sluice is fully open, the gates have to be dropped behind a breast wall. This ensures that the supply of water passing into the canal will be free from sand, the sand passes along the floor of the undersluices and is retained in the river bed.

The canal system.—The canal system consists of—

(*a*) A main canal with distributaries.

(*b*) A branch canal with distributaries.

(*c*) A large distributary (No. 6) with minors.

(*a*) *The main canal* is 26 miles 774 feet in length, for its first 13 miles it flows in a north-easterly direction and at that point it crosses the Grand Trunk Road (in its 89th mile). This canal then flows in an easterly direction parallel to and to the north of the Grand Trunk Road for a further 12 miles, where it turns to the south to cross the Grand Trunk Road in the 75th mile to flow into the Eden Canal in Issofabad mauza. There are three important cross drainage works, viz., the Kookooee syphon (5th mile), the Banka syphon (8th mile) and the Kandar syphon (13th mile). These are designed to pass the waters of the Kookooee, Banka and Kandar rivers under the canal.

Falls have been provided in the 15th, 16th, 17th, 20th, 21st, 24th, 26th and 27th miles.

Distributaries Main Canal.—Distributary No. 1 takes off in the 8th mile from the right bank and flows in a southerly direction for a distance of 1 mile 3,320 feet.

Distributary No. 2 takes off in the 10th mile from the right bank and flows in an easterly direction for a distance of 4 miles 1,680 feet.

Distributary No. 2A takes off in the 2nd mile of distributary No. 2 from its left bank, and flows in a north-easterly direction for a distance of 1 mile 4,195 feet.

The Branch Canal takes off in the 14th mile (*vide* separate description).

Distributary No. 3 takes off in the 15th mile from the right bank, and flows in a south-easterly direction for a distance of 3 miles 1,024 feet.

Distributary No. 4 takes off in the 17th mile from the right bank, and flows in an easterly direction for a distance of 4,173 feet.

Distributary No. 4A takes off from the right bank of Distributary No. 4 and flows in a south-easterly direction for 3,100 feet.

Distributary No. 4B takes off in the 18th mile from the right bank, and flows in an easterly direction for a distance of 2 miles 5,080 feet.

Distributary No. 4C takes off in the 19th mile from the right bank, and flows for a distance of 5 miles 3,530 feet in an easterly direction.

Distributary No. 5 takes off in the 21st mile from the left bank, and flows in an easterly direction for a distance of 1 mile 600 feet.

Distributary No. 6 takes off in the 26th mile from the left bank (*vide* separate description).

Distributary No. 7 takes off in the 26th mile from the left bank, and flows in an easterly and southerly direction for a distance of 1 mile 3,065 feet.

The total length of the main canal and its distributaries, exclusive of the Branch Canal and Distributary No. 6, is 49 miles 4,148 feet.

(*b*) *The Branch Canal* takes off from the left bank of the main canal in its 14th mile, and flows in a general north-easterly direction for a distance of 21 miles 2,120 feet.

In its 4th mile it is carried across the Khurria river on an important aqueduct (viz., the Khurria aqueduct).

Distributaries Branch Canal.—Distributary No. 1 takes off from the right bank in the 1st mile, and flows in an easterly direction for a distance of 16 miles 520 feet.

Distributary No. 1A takes off from the left bank of Distributary No. 1 in the 2nd mile, and flows in a northerly direction for a distance of 1 mile 1,534 feet.

Distributary No. 1B takes off from the left bank of Distributary No. 1 in the 3rd mile, and flows in a north-easterly direction for a distance of 1 mile 4,720 feet.

Distributary No. 1C takes off from the left bank of Distributary No. 1 in the 5th mile, and flows in a north-easterly direction for a distance of 3 miles 106 feet.

Distributary No. 1D takes off from the right bank of Distributary No. 1 in the 9th mile, and flows in a south-easterly direction for a distance of 3 miles 2,596 feet.

Distributary No. 1E takes off from the left bank of Distributary No. 1 in the 10th mile, and flows for a distance of 4 miles 23 feet in a north-easterly direction.

Distributary No. 1F takes off from the right bank of Distributary No. 1E in its 2nd mile, and flows in a north to north-easterly direction for a distance of 3 miles 160 feet.

Distributary No. 2 takes off from the right bank of the Branch Canal in its 6th mile, and flows in a south-easterly direction for a distance of 1 mile 3,720 feet.

Distributary No. 4 takes off from the right bank in the 9th mile, and flows in a southerly direction for a distance of 2 miles 3,188 feet.

Distributary No. 6 takes off from the right bank in the 12th mile and flows in a southerly direction for a distance of 3 miles 2,517 feet.

Distributary No. 7 takes off from the right bank in the 12th mile and flows in a southerly direction for a distance of 2 miles 3,460 feet.

Distributary No. 7A takes off from the right bank of Distributary No. 7 in its 1st mile, and flows in a westerly and southerly direction for a distance of 2 miles 440 feet.

Distributary No. 8 takes off from the right bank of the Branch Canal in the 12th mile, and flows in a southerly direction for a distance of 2 miles 1,440 feet.

Distributary No. 8A takes off from the left bank of Distributary No. 8 in its 1st mile, and flows in an easterly direction for a distance of 2 miles 4,330 feet.

Distributary No. 8A/1 takes off from the left bank of Distributary No. 8A in its 2nd mile, and flows in a north-easterly to easterly direction for a distance of 1 mile 3,296, feet.

Distributary No. 8A/2 takes off from the right bank of Distributary No. 8A in its 2nd mile, and flows in a southerly and easterly direction for a distance of 3 miles 480 feet.

Distributary No. 9 takes off from the right bank of the Branch Canal in the 15th mile, and flows in a south-easterly direction for a distance of 5 miles 18 feet.

Distributary No. 10 takes off from the right bank in the 18th mile, and flows in a south-easterly direction for a distance of 2 miles 4,774 feet.

Distributary No. 11 takes off from the right bank in the 20th mile, and flows in a south-easterly direction for a distance of 9 miles 2,480 feet.

Distributary No. 11A takes off from the right bank of Distributary No. 11 in its 2nd mile, and flows in a southerly direction for a distance of 2 miles 3,440 feet.

Distributary No. 11B takes off from the left bank of Distributary No. 11 in its 6th mile, and flows in an easterly direction for a distance of 1 mile 1,726 feet.

Distributary No. 13 will take off from the left bank of the Branch Canal in its 20th mile, and will flow in a north-easterly direction for a distance of 3 miles 560 feet.

Distributary No. 14 will take off from the tail end of the Branch Canal and flow in an easterly direction for a distance of 4 miles 444 feet.

Distributary No. 14A will take off from the left bank of Distributary No. 14 in its first mile and flow in a north-easterly direction for a distance of 1 mile 5,220 feet.

The total length of channel in the Branch Canal and its minors is 107 miles 512 feet.

(c) Distributary No. 6 main canal.—This distributary takes off from the left bank of the main canal in its 26th mile. It flows in a north-easterly direction for a distance of 22 miles 2,640 feet.

Adequate cross drainage works have been provided, but there is no work of major importance in this part of the canal system.

Minor channels of Distributary No. 6.—*Distributary No. 6A* takes off from the right bank in the 5th mile, and flows in an easterly direction for a distance of 10 miles 1,645 feet. In order to obtain a large command close to its offtake two parallel channels each 1 mile 1,720 feet in length have been supplied.

Distributary No. 6B takes off from the left bank of Distributary No. 6A in its 5th mile, and flows in a north-easterly direction for a distance of 6 miles 4,690 feet.

Distributary No. 6C takes off from the right bank of Distributary No. 6 in the 8th mile, and flows in a north-easterly direction for a distance of 3 miles 107 feet.

Distributary No. 6D takes off from the left bank in the 9th mile, and flows in a northerly direction for a distance of 1 mile 3,905 feet.

Distributary No. 6D/1 takes off from the left bank of Distributary No. 6D in its 3rd mile, and flows in a north-westerly to north-easterly direction for a distance of 1 mile 2,063 feet.

Distributary No. 6E takes off from the right bank of Distributary No. 6 in the 12th mile, and flows in a south-easterly direction for a distance of 1 mile 5,220 feet.

Distributary No. 6F takes off from the right bank of Distributary No. 6 in the 12th mile, and flows in a northerly to north-easterly direction for a distance of 2 miles 4,955 feet.

Distributary No. 6G takes off from the right bank of Distributary No. 6 in the 12th mile, and flows in a south-easterly direction for a distance of 2 miles 3,813 feet.

Distributary No. 6H takes off from the right bank of Distributary No. 6 in the 16th mile, and flows in a south-easterly direction for a distance of 2 miles 3,040 feet.

Distributary No. 6J takes off from the left bank of Distributary No. 6 in the 16th mile, and flows in a north-easterly direction for a distance of 3 miles 821 feet.

Distributary No. 6K takes off from the right bank of Distributary No. 6 in the 18th mile, and flows in a south-easterly to easterly direction for a distance of 4 miles 2,717 feet.

Distributary No. 6K/1 takes off from the right bank of Distributary No. 6K in its 3rd mile, and flows in a southerly to easterly direction for a distance of 2 miles 507 feet.

Distributary No. 6L takes off from the left bank of Distributary No. 6 in the 19th mile, and flows in a north-easterly direction for a distance of 5 miles 380 feet.

Distributary No. 6L/1 takes off from the right bank of Distributary No. 6L in its 4th mile, and flows in an easterly direction for a distance of 1 mile 660 feet.

The total length of Distributary No. 6 and its minor channels is 75 miles 1,783 feet.

(*b*) *Object of the work.*

To supplement deficiencies of rainfall during the Khariff cultivation season and to improve the fertility of the land by supplies of the rich water of the river Damodar.

(*c*) *Boundaries of the area.*

The area is in police-stations Ausgram, Bhatar, Mangalkot, Manteshwar, Memari, Burdwan and Galsi of Burdwan district, included within the following boundaries:—

In police-station Ausgram.—The Damodar Branch Canal from the point where it crosses the boundary of Ausgram police-station in Mauza Seuli (J. L. No. 94) to the point where it is crossed by the Galsi-Dignagar road;

thence the Galsi-Dignagar road to its junction with the Mankar-Guskara road in mauza Dignagar (J. L. No. 169);

thence the Mankar-Guskara road to the point where it crosses the southern boundary of mauza Gonna (J. L. No. 163);

thence the south-east boundary of mauzas Gonna (J. L. No. 163) and Dwariapur (J. L. No. 162) and the southern boundary of mauza Guskara (J. L. No. 158) as far as the loop line of the East Indian Railway;

and thence the loop line of the East Indian Railway to the point where it crosses the boundary of police-station Ausgram in mauza Sibada (J. L. No. 161):

In police-station Bhatar.—A straight line running from the point where the loop line of the East Indian Railway crosses the boundary of police-station Ausgram in mauza Orgram (J. L. No. 11) to the junction in that mauza of the Orgram-Mahata road with the Burdwan-Suri road;

thence the Burdwan-Suri road as far as the Damodar Branch Canal;

thence the Damodar Branch Canal eastwards up to the point in mauza Kasipur (J. L. No. 31) where it is crossed by the road from Khana junction to Sripur (J. L. No. 30);

thence this road up to its junction with the Guskara-Balgona road, in mauza Debpur (J. L. No. 35);

thence by the Guskara-Nityanandapur road up to the point where it crosses the western boundary of mauza Eruar (J. L. No. 38);

thence the western boundary of mauza Eruar (J. L. No. 38) northwards as far as the boundary of police-station Bhatar;

and thence the boundary of police-station Bhatar westwards as far as the trijunction of mauzas Mandardihi (J. L. No. 36), Chandra (J. L. No. 47 of police-station Mangalkot) and Aogram (J. L No. 48 of police-station Mangalkot):

In police-station Mangalkot.—The south-eastern boundary of mauza Chandra (J. L. No. 47) from the trijunction of the three mauzas abovenamed to its junction with the river Kunur;

thence the river Kunur up to the point where it enters mauza Mangalkot (J. L No. 64);

thence a straight line running eastwards to the junction in mauza Mangalkot of the Karjana-Mangalkot road with the Mangalkot-Nigan road;

thence the Karjana-Mangalkot road northwards as far as the northern boundary of mauza Mangalkot;

thence the northern boundary of mauza Mangalkot as far as the trijunction of mauzas Mangalkot, Halimpur (J. L. No. 61) and Jhilu (J. L. No. 62);

thence a straight line running south-east from the abovenamed trijunction point to the trijunction of mauzas Jhilu (J. L. No. 62), Bhatpara (J. L. No. 72) and Kunda (J. L No. 74);

thence the eastern boundaries of mauzas Bhatpara (J. L. No. 72), Bebucha (J. L. No. 71) and Babladihi (J. L. No. 68) as far as the Brahmini river;

thence the Brahmini river up to the boundary of police-station Mangalkot;

and thence south-eastwards the boundary of police-station Mangalkot:

In police-station Bhatar.—The boundary between police-station Bhatar and police-station Mangalkot as far as the eastern boundary of mauza Mukundapur (J. L. No. 83);

thence the eastern boundaries of Mukundapur and Bhatakul (J. L. No. 82) as far as the trijunction of mauzas Bhatakul, Nasigram (J. L. No. 89) and Bara Belun (J. L. 93);

thence a straight line running to the north-east corner of mauza Chandibati (J. L. No. 94);

thence the northern and western boundaries of mauza Chandibati;

thence part of the eastern boundary and the southern boundary of mauza Kulnagar (J. L. No. 95);

thence the eastern boundaries of mauzas Katari (J. L. No. 96) and Kachgaria (J. L. No. 97);

thence the khal running south-eastwards through mauzas Hanigram (J. L. No. 98) and Bijoypur (J. L. No. 105) and the north eastern boundary of mauza Erachya (J. L. No. 104) as far as the boundary of police-station Bhatar;

and then eastwards the boundary between police-station Bhatar and police-staion Burdwan:

In police-station Manteshwar.—The southern boundary of police-station Manteshwar as far as the eastern boundary of mauza Panbarea (J. L. No. 23);

thence the Khari river north-eastwards up to the point where it meets the Bhatar-Manganpur road in mauza Manteshwar (J. L. No. 41);

thence the Bhatar-Manganpur road eastwards up to the western boundary of mauza Sahapur (J. L. No. 69);

thence the western and southern boundaries of mauza Sahapur;

thence the eastern boundaries of mauzas Kusumgram (J. L. No. 71), and Katsihi (J. L. No 99);

thence the north boundary of mauza Isna Buzruk (J. L. No. 107) and the north and eastern boundaries of mauza Jamna (J. L. No. 108) and the north and eastern boundaries of mauza Dewani (J. L. No. 122);

thence the eastern boundary of mauza Muralia up to the trijunction point of mauzas Muralia, Bhelia and Piagram;

thence a straight line to the south-west from the trijunction point of mauzas Murulia, Piagram (J. L. No. 141) and Bhelia (J. L. No. 39), through mauzas Bhelia and Majhergram (J. L. No. 133), to the junction in mauza Majhergram of the Manteshwar-Memari road and the feeder road from mauza Bara Palasan (J. L. No. 8 of police-station Memari),

and thence the Manteshwar-Memari road southwards to the point where it crosses the Banka river;

In police-station Memari.—The rivers Banka and Maya (otherwise called Mero) westward as far as the north-eastern corner of mauza Banagram (J. L. No 16);

thence the eastern boundaries of mauzas Banagram, Bhandul (J. L. No. 17) and Rean (J. L. No 18);

thence part of the boundary of mauza Kaleswar (J. L. No. 20) as far as the river Banka;

thence the river Banka south-westwards as far as its junction with the Chanda khal in mauza Masagaria (J. L. No. 34);

and thence the Chanda khal westwards as far as the western boundary of police-station Memari in mauza Bhaita (J. L. No. 40);

In police-station Burdwan.—The Chanda khal westwards as far as the point, in mauza Purba Krishnapur (J. L. No. 145), where it meets the road from mauza Saktigar (J. L. No 155) to mauza Ataghar (J. L. No. 149);

thence the road from mauza Saktigarh to mauza Atagarh northwards as far as the Burdwan-Kalna road.

thence the Burdwan-Kalna road westwards as far as the Chanda khal in mauza Basatpur (J. L. No. 96);

thence the Chanda khal to its junction with the Sapjala khal in mauza Basatpur;

thence the Sapjala khal westwards to the point where it meets the Burdwan-Katwa road;

thence the Burdwan-Katwa road southwards as far as the boundary of the Burdwan Municipality;

thence the boundary of Burdwan Municipality westwards to the point where it cuts the cross road which joins the Grand Trunk road (in the 74th mile) and the Burdwan-Katwa road;

thence southwards this cross road to the Grand Trunk road;

thence the Grand Trunk road westwards as far as the Delkusha road in Burdwan Municipality;

thence the Delkusha road southwards as far as the north bank of the Krishnasagar tank;

thence the road passing along the north and west banks of the Krishnasagar tank as far as its junction with the Lakurdi and Mithapukur roads;

thence the Lakurdi road westwards as far as the eastern boundary of mauza Lakurdi (J. L. No. 29);

thence the eastern boundary of mauza Lakurdi southwards as far as the Banka river;

and thence the Banka river as far as the point in mauza Nala (J. L. No. 20) where it meets the boundary of police-station Burdwan:

In police-station Galsi.—The Banka river westwards as far as its junction with the Kandar khal in mauza Dadpur (J. L. No 123);

thence the Kandar khal northwards and westwards to the point where it meets the western boundary of mauza Parsura (J. L. No. 128);

thence the western boundary of mauza Parsura;

thence the northern boundary of mauza Maszidpur (J. L. No. 119) and the southern boundaries of mauzas Belan (J. L. No. 108) and Adra (J. L No 78);

thence the eastern and southern boundaries of mauzas Sirarai (J. L. No. 77) and Malla Sarul (J. L No. 76);

thence the eastern boundary of mauza Simasimi (J. L. No. 65) southwards till it meets the Damodar left embankment;

thence the Damodar left embankment and the left bank of the Damodar river as far as the south-east corner of mauza Kasba (J. L. No. 20);

thence a straight line between that corner and the junction of the Damodar canal with the road from Mankar station on the East Indian Railway;

thence the Damodar canal to the east and north-east up to the point where it crosses the eastern boundary of mauza Khuraj (J. L. No. 82);

thence the eastern boundary of mauza Khuraj (J. L. No. 82), the southern and eastern boundaries of mauza Pursha (J. L. No. 85) and the eastern boundary of mauza Kolkol (J. L. No. 86);

thence the southern and eastern boundaries of Purandargar (J. L. No. 87);

and thence eastwards the boundary between police-station Galsi and police-station Ausgram.

H. S. E. STEVENS,
Secy. to the Govt. of Bengal.

TREASURY NOTICES.

Comilla, the 28th July 1936.

Babu Benoy Lal Ghosh, Deputy Magistrate and Deputy Collector, has been placed in charge of the Tippera Treasury from the 27th July 1936 and is authorised to draw bills on other treasuries and banks from that day.

Comilla, the 31st July 1936.

Maulvi Mahbubuddin Ahmed, Deputy Magistrate and Deputy Collector, has been placed in charge of the Tippera Treasury from the 31st July 1936 and is authorised to draw bills on other treasuries and banks from that date.

J. P. ROY, *Addl. Collector.*

Orders by the Deputy Accountant-General, Bengal.

The Treasury Buildings, the 29th July 1936.

It is notified that the refund order book No. 7183 containing 50 orders "White" is in use by the Assistant Income-Tax Office, Military Circle, Meerut, with effect from the 21st July 1936.

C. BHASKARAIYA,

Dy. Accountant-General, Bengal.

HIGH COURT NOTICES.

Civil.

The 27th July 1936.

No. 16660A.—Babu Kalipada Mukharji, munsif, under orders of transfer to Comilla, in the district of Tippera, is vested with the powers of a Judge of a Court of Small Causes for the trial of suits cognizable by such a Court up to the value of Rs. 50 within the local limits of the Comilla munsifi.

The 28th July 1936.

No. 16767A.—The munsifs named in the following Schedule are vested with the powers of a Judge of a Court of Small Causes for the trial of suits cognizable by such a Court up to the value of Rs. 300 within the local limits noted against each :—

Schedule.

1. Maulvi Khondkar Mutheral Islam, under orders of transfer to Patiya (Chittagong)—Patiya munsifi.
2. Babu Bhabataran Mukharji, under orders of transfer to Bankura (Sadar)—Sadar munsifi of Bankura.
3. Babu Harendra Krishna Mukharji, under orders of transfer to Bogra—Bogra munsifi.

No. 16772A.—The munsifs named in the following Schedule are vested under section 19, sub-section (2) of the Bengal, Agra and Assam Civil Courts Act, 1887 (XII of 1887), as amended by the Decentralization Act, 1914 (IV of 1914), with powers to try, under the ordinary procedure, original suits up to the value of Rs. 2,000 arising within the local limits noted against each :—

Schedule.

1. Maulvi Khondkar Mutheral Islam, under orders of transfer to Patiya (Chittagong)—Patiya munsifi.
2. Babu Bhabataran Mukharji, under orders of transfer to Bankura (Sadar)—Original jurisdiction of the District Judge, Bankura.
3. Babu Harendra Krishna Mukharji, under orders of transfer to Bogra—Executive district of Bogra.

No. 16777A.—In exercise of the powers delegated to the High Court by the notification of the Government of Bengal, No. 64J.D., dated the 30th April 1915, Babu Bhabataran Mukharji, munsif, under orders of transfer to Bankura (Sadar), is vested under article 8 of the Second Schedule of the Provincial Small Cause Courts Act, 1887 (IX of 1887), with powers to try, under the Small Cause Court procedure, suits up to the value of Rs. 300 for the recovery of rents of homestead lands arising within the municipal area within his jurisdiction.

No. 16780A.—In exercise of the powers delegated to the High Court by the notification of the Government of Bengal, No. 64J.D., dated the 30th April 1915, Babu Harendra Krishna Mukharji, munsif, under orders of transfer to Bogra, is vested under article 8 of the Second Schedule of the Provincial Small Cause Courts Act, 1887 (IX of 1887), with powers to try, under the Small Cause Court procedure, suits up to the value of Rs. 300 for the recovery of rents of homestead lands arising within the municipal area within his jurisdiction.

The 29th July 1936.

No. 16898A.—In exercise of the powers delegated to the High Court by the notification of the Government of Bengal, No. 64 J.D., dated the 30th April 1915, Babu Satchidananda Gupta, munsif of Lalbagh, in the district of Murshidabad, is vested under article 8 of the Second Schedule of the Provincial Small Cause Courts Act, 1887 (IX of 1887), with powers to try, under the Small Cause Court procedure, suits up to the value of Rs. 300 for the recovery of rents of homestead lands arising within the municipal area within his jurisdiction.

The 31st July 1936.

No. 17119A.—The munsifs named in the following Schedule are vested with the powers of a Judge of a Court of Small Causes for the trial of suits cognizable by such a Court up to the value and within the local limits noted against each :—

Schedule.

1. Mr. Santi Priya Basu, under orders of transfer to Arambagh (Hooghly)—Rs. 300—Arambagh munsifi.
2. Maulvi Velayet Hossain Mollah, under orders of transfer to Howrah—Rs. 100—Howrah munsifi.

By order of the High Court,

E. S. SIMPSON, *Registrar.*

ORDERS BY COMMISSIONERS OF DIVISIONS.

Burdwan Division—Chinsura.

No. 1955L.S.-G.—31st July 1936.—It is hereby notified for general information that, under rule 20(*b*) of the rules for the management of charitable hospitals and dispensaries in Bengal, the following gentlemen have been appointed to be members of the committee for the management of the charitable dispensary at Guti in the district of Hooghly :—

The Subdivisional Officer, Serampore.

Babu Jotindra Mohan Dutta.

Babu Sailendra Krishna Dutta.

Babu Nimai Chandra Dutta.

Mr. Satya Charan Sen.

Dr. Upendra Nath Dutta.

Babu Pashupati Mukherjee.

Babu Panchanan Samaddar.

Babu Jugal Chandra Pal, B.A.

Babu Kanai Lal Seal.

No. 1958L.S.-G.—31st July 1936.—It is hereby notified for general information that, under rule 20(*b*) read with rule 23 of the rules for the management of charitable hospitals and dispensaries in Bengal, Babu Ram Sadav Chakravarty has been appointed to be a member of the committee for the management of the charitable dispensary at Saltora in the district of Bankura, *vice* Babu Radharaman Chakravarty, deceased.

No. 4631J.G. -1st August 1936. Babu Nibaran Chandra Mukherji, Sub-Deputy Collector and Circle Officer of Vishnupur, in the district of Bankura, is appointed until further orders to act as Circle Officer of Patrasayar in the same district, in addition to his own duties, *vice* Maulvi Abul Khair Khan, granted leave for two months.

L. B. BURROWS, *Commissioner.*

Chittagong Division—Chittagong.

Comilla, the 27th July 1936.

No. 7124M.—It is hereby notified for general information that, under section 13 of the Bengal Village Self-Government Act, 1919 (Bengal Act V of 1919), read with section 6 (3) and rule 36 of the rules for the election and appointment of members of union boards, Munshi Ukiluddin, son of late Azamaddin, of Maina, has been appointed as a member of Majlishpur union board No. 1 of Brahmanbaria police-station in the Brahmanbaria subdivision of the district of Tippera, *vice* Munshi A. K. Shamsuddin of Maina, deceased.

No. 7148M.—It is hereby notified for general information that, under section 13 of the Bengal Village Self-Government Act, 1919 (Bengal Act V of 1919), read with section 6 (2) and rule 35 of the rules for the election and appointment of members of union boards, Munshi Ali Reza Patwari of Lakshmipur *alias* Kamalapur, post office Baharia, has been duly elected as a member of the Sakhua union board No. VI of the Chandpur police-station in the Chandpur subdivision of the district of Tippera, *vice* Maulvi Mahammad Sadat Ali, deceased.

J. P. RAY, *Addl. District Magistrate.*

Dacca Division—Dacca.

No. 3902J.—30th July 1936.—It is hereby notified for general information that, under rule 20(*b*) of the manual of rules for the management of charitable hospitals and dispensaries in Bengal, published with Government notification No. 138T.—Medl., dated the 7th June 1915, Maulvi Reazuddin Bhuiya is appointed to be a member of the committee for the management of the charitable dispensary at Monohardi in the district of Dacca, in place of Maulvi Sujat Ali Bhuiya, deceased.

No. 3905J.—30th July 1936.—It is hereby notified for general information that at the meeting held on 9th June 1934 of the newly elected and appointed Commissioners of the Netrokona Municipality in the district of Mymensingh, Maulvi Serajal Haque has been duly elected as Vice-Chairman under section 48 of the Bengal Municipal Act, 1932.

No. 3924J.—31st July 1936.—Maulvi Amir Ali, Sub-Deputy Collector and Circle Officer, Bakarganj Circle, in the district of Bakarganj, is transferred to the headquarters station of the district of Dacca on general duty.

No. 3936J.—31st July 1936.—Babu Hira Lal Roy, Sub-Deputy Collector, on leave, who has been posted to the Dacca Division in Government notification No. 6460A., dated 24th July 1936, is appointed to be Circle Officer of Bakarganj Sadar Circle in the district of Bakarganj.

No. 3936J.—31st July 1936.—Babu Mahendra Nath Chaudhuri, Sub-Deputy Collector, on leave, who has been posted to the Dacca Division in Government notification No. 6460A., dated the 24th July 1936, is posted to the headquarters station of the district of Mymensingh on general duty.

W. H. NELSON, *Commissioner.*

Barisal, the 27th July 1936.

No. 5166J.—It is hereby notified for general information that, under section 13 of the Bengal Village Self-Government Act, 1919 (Bengal Act V of 1919), Babu Sarada Charan Mazumdar has been duly elected to be a member of Saidpur union board in the police-station of Daulatkhan in the Bhola subdivision of the Bakarganj district, *vice* Babu Mahesh Chandra Bhakta, removed under section 12 (*1*) (*a*) of the Village Self-Government Act.

A. HYE, *Addl. District Magistrate.*

Orders by the Deputy Inspector-General of Police, Dacca Range.

Dacca.—No. 3907.—30th July 1936.—Babu Harendra Kumar Ghosh, Court Inspector, Tangail, Mymensingh, is granted 4 months' leave on half average pay in extension of the leave already granted to him.

Babu Nishitha Nath Banarji, officiating Court Inspector, will continue to act as such in the vacancy.

A. D. GORDON,
Deputy Inspector-General of Police.

Presidency Division—Calcutta.

No. 378J.G. — 28th July 1936. — It is hereby notified for general information that in exercise of the powers conferred on me by rule 63 (2) of the Bengal Jail Code, 1919, Volume I, as revised, I appoint Mr. I. J. Cohen to be a non-official visitor of the Alipore Central Jail in the district of the 24-Parganas for a period of two years, with effect from the 14th August 1936.

No. 1777 R G.—28th July 1936.—Babu Sisir Kumar Har, Sub-Deputy Collector, 24-Parganas, is transferred to Chuadanga, Nadia, as Circle Officer.

No. 1783 R G.—28th July 1936.—Babu Jitendra Nath Guha, Sub-Deputy Collector and Circle Officer, Chuadanga, Nadia, is transferred to the headquarters station of the district of the 24-Parganas

A. J. DASH, *Commissioner.*

Jessore, the 31st July 1936.

It is hereby notified for general information that, under section 13 of the Bengal Village Self-Government Act, 1919 (Bengal Act V of 1919), read with rule 36 of the rules for the election and appointment of members of union boards, Maulvi Akmal Hossain has been duly nominated to be a member of the Bunagati union board in the Magura subdivision of the district of Jessore, *vice* Babu Abhoy Charan Ghosh, deceased.

[ILLEGIBLE], for *District Magistrate.*

Krishnagar, the 25th July 1936.

Erratum.—It is hereby notified for general information that this office notification No 2170L S.-G., dated the 13th July 1936, published in the *Calcutta Gazette*, dated the 23rd July 1936, at page 1781, in which the names of appointed members of certain union boards in the Kushtia subdivision of Nadia district was published, is hereby cancelled.

S. K. DAS GUPTA, *District Magistrate.*

Orders by the Deputy Inspector-General of Police, Intelligence Branch.

Calcutta.—No. 1364/R.O.—31st July 1936.—Sub-Inspector Jyotish Chandra Banarji was appointed to act as Inspector from 1-7-1936, a.m to 23-7-1936, p.m., *vice* Babu Hem Chandra Sen, Inspector, on leave.

C. E. S. FAIRWEATHER,
Deputy Inspector-General of Police (offg).

Orders by the Deputy Inspector-General of Police, Presidency Range.

Calcutta.—No. 4197.—27th July 1936.—Babu Rasik Lal Chakrabatti, Inspector, 24-Parganas, is granted 3 months' leave on half average pay in extension of the leave already granted to him.

Babu Khagendra Nath Mukharji, officiating Inspector of that district, will continue to act as such in the above vacancy.

Mr. W. Linford, Armed Inspector, 24-Parganas, was allowed leave on average pay from 11-5-1936, a.m to 2-6-1936. a.m., under rule 81(*b*)(*n*) of the Fundamental Rules.

Babu Raj Mohan Chakrabatti, Inspector, E. B Railway, Sealdah, is granted 3 weeks' leave on average pay, on medical certificate, in extension of the leave already granted to him.

Babu Amrita Lal Guha, officiating Inspector, will continue to act as such in the above vacancy.

L. H. BURTON,
Deputy Inspector-General of Police.

Rajshahi Division—Jalpaiguri.

No. 3614M.—24th July 1936.—It is notified for general information that at the by-election in Ward No. I of the Pabna Municipality Babu Ajit Kumar Roy, B L, has been duly elected as a Commissioner, *vice* Md. Sahadul Mia, deceased.

No 3617M —27th July 1936.—It is hereby notified for general information that, under rule 20(*b*) of the manual of rules for the management of hospitals and dispensaries under the supervision of the Government of Bengal, the following gentlemen are appointed to be members of the committee for the management of the Gomostapur dispensary in the district of Malda :—

Sub-Registrar, Gomostapur (*ex-officio*).
Sub-Inspector of Police, Gomostapur (*ex-officio*).
Babu Radhika Prasad Das, Jotedar, Gomostapur
Babu Abhoy Charan Haldar, Jotedar, Gomostapur
Md Jabed Ali Mandal, Jotedar, Gomostapur.

L R FAWCUS, *Commissioner (offg.).*

Pabna, the 1st August 1936.

It is hereby notified for general information that, under sub-section (2) of section 6 of the Bengal Village Self-Government Act, 1919, the following gentlemen have been duly elected to be members of the undermentioned union boards in the Sadar subdivision of the Pabna district:- -

Thana Faridpur.

Banwarinagar union board No. IV.

Munshi Motaharuddin Ahmad.
Babu Gopal Chandra Kundu.
Babu Phanindra Nath Ray.
Babu Ajit Ranjan Majumdar.
Babu Hrishikesh Majumdar.
Munshi Nasimuddin Sarkar.

Demra union board No. VIII.

Babu Shaileswar Ray.
Munshi Ebad Ali Pramanik.
Babu Kalipada Kundu.
Munshi Tazimuddin Molla.
Munshi Kutubuddin Khan.
Babu Hriday Nath Kundu.

It is hereby notified for general information that, under sub-section (3) of section 6 of the Bengal Village Self-Government Act, 1919, the following gentlemen have been appointed to be members of the undermentioned union boards in the Sadar subdivision of the Pabna district:—

Thana Faridpur.

Banwarinagar union board No. IV.

Babu Anukul Chandra Bhattacharya.
Babu Rakhal Chandra Sarkar.
Munshi Muhammad Nasimuddin Sarkar.

Demra union board No. VIII.

Babu Jitendra Nath Ray.

Babu Tarapada Seal.

Munshi Muhammad Tazimuddin Pramanik.

L. C. GUHA, *District Magistrate.*

Orders by the Deputy Inspector-General of Police, Rajshahi Range.

Jalpaiguri.—No. 5601.—31st July 1936.—Armed Sub-Inspector Sew Paltan Singh of Bogra (now attached to Dinajpur) is temporarily transferred to Rangpur and is appointed with effect from the date of assuming charge to act as Armed Inspector, *vice* Khan Sahib Subadar Ghulam Muhammad Khan temporarily employed with the Midnapore Range Reserve force. The transfer is made in the interests of public service.

Babu Lal Singh Subba, Inspector, Darjeeling, is granted 1 year's leave, viz., 4 months' leave on average pay and the rest on half average pay with effect from 14th August 1936 or any subsequent date on which he may be relieved.

Sub-Inspector Surjya Narayan Pradhan of Darjeeling is appointed to act as Inspector with effect from the date of assuming charge, *vice* Babu Lal Singh Subba, Inspector, granted leave.

E. B. JONES,
Deputy Inspector-General of Police.

Registered No. C207

The Calcutta Gazette

THURSDAY, AUGUST 6, 1936.

PART IA

Orders and Notifications by the Government of India republished for general information.

REFORMS OFFICE.

NOTIFICATION.

Simla, the 21st July 1936.

No. F. 5/III/36-G. (A).—The following Orders of the King's Most Excellent Majesty in Council are published for general information :—

(1) The Government of India (Commencement and Transitory Provisions) Order, 1936.

(2) The Government of India (Distribution of Revenues) Order, 1936.

(3) The Government of India (Provincial Elections) (Corrupt Practices and Election Petitions) Order, 1936.

THE GOVERNMENT OF INDIA (COMMENCEMENT AND TRANSITORY PROVISIONS) ORDER, 1936.

AT THE COURT AT BUCKINGHAM PALACE.

The 3rd day of July, 1936.

PRESENT :

THE KING'S MOST EXCELLENT MAJESTY IN COUNCIL.

WHEREAS by section three hundred and twenty of the Government of India Act, 1935 (hereafter in this Order referred to as "the new Act"), it is provided that the provisions of that Act other than those of Part II thereof shall, subject to any express provision to the contrary, come into force on a date to be appointed by His Majesty in Council for the commencement of Part III thereof, but His Majesty in Council is empowered to fix an earlier or later date for the coming into operation, either generally or for particular purposes, of any particular provisions of the Act :

AND WHEREAS by section three hundred and ten of the new Act His Majesty in Council is empowered, for the purpose of facilitating the transition to the provisions of the new Act from the provisions of the Government of India Act (hereafter in this Order referred to as "the old Act"), to direct that the new Act and any provisions of the old Act still in force shall, during a limited period, have effect subject to adaptations and modifications, to make with respect to a limited period temporary provision for ensuring that during and after the transition there are available to all Governments in India sufficient revenues to enable the business of those Governments to be carried on, and to make other temporary provisions for the purposes of removing any difficulties arising in relation to the transition :

AND WHEREAS a draft of this Order was laid before Parliament in accordance with the provisions of sub-section (1) of section three hundred and nine of the new Act and an Address has been presented to His Majesty by both Houses of Parliament praying that an Order may be made in the terms of this Order :

NOW, THEREFORE, His Majesty, in the exercise of the said powers and of all other powers enabling him in that behalf, is pleased, by and with the advice of His Privy Council, to order, and it is hereby ordered, as follows :—

1. This Order may be cited as "The Government of India (Commencement and Transitory Provisions) Order, 1936."

2. The Interpretation Act, 1889, applies for the interpretation of this Order as it applies for the interpretation of an Act of Parliament.

3.—(1) The provisions of the new Act, other than those of Part II thereof and other than those referred to in the next succeeding sub-paragraph, shall, subject to the provisions of that Act and of this and any other Order in Council made thereunder, come into force on the first day of April, nineteen hundred and thirty-seven, and accordingly that date is the date referred to in that Act as the date of the commencement of Part III thereof.

(2) The provisions of Part VIII of the new Act, of Chapter I of Part IX of that Act, and of the Eighth Schedule to that Act, shall come into force on such dates as His Majesty in Council may hereafter appoint, and section two hundred and thirty-two of that Act shall not come into force until the establishment of the Federation.

(3) In this paragraph the reference to Part II of the new Act shall be deemed to include a reference to the First and Second Schedules thereto, and to so much of the Third Schedule thereto as relates to the Governor-General.

4.—(1) So far as may be necessary for the purpose of enabling the members of all the Provincial Legislatures to be duly chosen in time for those Legislatures to be ready to meet by the commencement of Part III of the new Act—

(*a*) the provisions of Parts III and XII of, and of the Fifth and Sixth Schedules to, the new Act shall (so far as those provisions are not already in force) come into force on the date of the making of this Order ; and

(*b*) any Orders in Council or rules made under the new Act with respect to those Legislatures, whether before or after the making of this Order, shall come, or, as the case may be, be deemed to have come, into operation at the date of the making of the Orders or rules in question, and shall authorise or, as the case may be, be deemed to have authorised the giving of any notice or direction and the taking of any other step, given or taken in anticipation of the making or coming into force of the Orders or rules in question.

(2) References in sub-section (2) of section sixty-eight of the new Act to the Federal Legislature shall during the period before the commencement of Part III of that Act (as well as during the period in which Part XIII of that Act is in force) be construed as references to the Indian Legislature.

(3) For the avoidance of doubt it is hereby declared that a person who has been chosen to be a member of the Legislative Assembly of Bengal or of the Legislative Assembly of Bihar may, before the commencement of Part III of the new Act, take part in an election to choose members of the Legislative Council of the Province notwithstanding that he has not taken his seat or taken the oath prescribed by section sixty-seven of the new Act.

5.—(1) The Governor of each Province may in his discretion from time to time authorise such expenditure from the revenues of the Province as he deems necessary to enable the business of the Provincial Government to be carried on between the commencement of Part III of the new Act and the date on which a schedule of authorised expenditure is authenticated in accordance with the provisions of section eighty of the new Act, or until the expiration of six months from the commencement of Part III of the new Act, whichever first occurs :

Provided that, except with the consent of the Governor-General in his discretion, the expenditure so authorised shall not exceed one-half of the total expenditure from the revenues of the Province in the previous financial year as shown in the revised estimates for that year.

(2) The expenditure authorised under the preceding sub-paragraph shall be included under the appropriate heads in the first estimates of expenditure laid before the Provincial Legislature under section seventy-eight of the new Act, and the provisions of that section and of sections seventy-nine and eighty of that Act shall apply in relation thereto :

Provided that any expenditure so authorised shall, so far as regards moneys paid and liabilities incurred before the date on which a schedule of authorised expenditure is authenticated in accordance with the provisions of the said section eighty, be deemed for all purposes of the new Act to have been duly authorised notwithstanding that it may not be included in the Schedule so authenticated.

(3) The following provisions of this sub-paragraph shall apply in relation to any expenditure incurred from the revenues of a Province in respect of a period before the commencement of Part III of the new Act in excess of the expenditure authorised in respect of that period under the relevant provisions of the old Act

(*a*) the Governor of the Province may, in his discretion, at any time before the expiration of six months from the commencement of Part III of the new Act declare any such expenditure to have been duly authorised ; and

(*b*) in so far as no such declaration has been made, the provisions of section eighty-one of the new Act (which relates to supplementary statements of expenditure) shall apply in relation to any such expenditure as they apply in relation to expenditure in respect of financial years after the commencement of the said Part III.

6. The Governor of each Province in his discretion may by public notification continue for a period not exceeding twelve months from the commencement of Part III of the new Act any taxation which was being levied for the purposes of the Province and would otherwise expire, without prejudice, however, to the powers of the Provincial Legislature as to the imposition and remission of taxation.

7. Before the first general elections are held to choose the members of the Legislative Assembly of any Province, the Governor shall prorogue the existing Legislative Council, if any, of that Province until the first day of April nineteen hundred and thirty-seven, and on the commencement of Part III of the new Act the Council shall automatically be dissolved.

The reference in this paragraph to elections held to choose members of a Legislative Assembly does not include a reference to primary elections held to choose candidates for seats in that Assembly.

8. On the commencement of Part III of the new Act, the members of the Council of State and the Legislative Assembly of the Indian Legislature who have been elected or nominated to represent Burma or Burma constituencies shall vacate their seats.

9. (1) Acts of the Indian Legislature made before the commencement of Part III of the new Act (including Acts made under section sixty-seven B of the old Act) may, notwithstanding the repeal of the old Act and notwithstanding anything in section two hundred and ninety two of the new Act, be validly made so as first to come into force at, or at any time after, the commencement of Part III of the new Act, but any Act which is valid only by virtue of this paragraph shall, except as respects things done or omitted to be done before its expiration cease to have effect on the expiration of twelve months from the commencement of Part III of the new Act :

Provided that—

(*a*) any such Act may be continued, repealed or amended by any Legislature or authority having for the time being power to legislate in relation to the subject-matter of the Act :

(*b*) any such Act shall have effect as part of the law of British India, but not as part of the law of Burma ;

(*c*) if and in so far as any such Act is inconsistent with the new Act, or any Order in Council made thereunder (whether made before or after the Act of the Indian Legislature) the new Act, or the Order in Council, as the case may be, shall prevail.

(2) This paragraph shall apply in relation to regulations and ordinances made under sections seventy-one and seventy-two of the old Act as it applies in relation to Acts of the Indian Legislature.

10. Where any functions of a Local Government under any existing Indian law are transferred by or under the new Act to the Federal Government, the Provincial Government shall, nevertheless, continue, to perform those functions for such period, if any, not exceeding one year from the commencement of Part III of the new Act, as the Governor-General may fix, and shall, in the exercise thereof, be subject to the like control by the Governor-General in Council as immediately before the commencement of the said Part III.

11. Section sixteen of the new Act (which authorises the appointment of an Advocate-General for the Federation) and so much of sub-section (3) of section thirty-three thereof as declares his salary and allowances to be charged on the revenues of the Federation shall come into force on the commencement of Part III of the new Act.

12. So much of section three hundred and twenty-one of, and of the Tenth Schedule to, the new Act as repeals sub-section (2) of section sixty-seven of the old Act down to the words " the revenues of India " shall not take effect until the establishment of the Federation.

13.—(1) The provisions of this paragraph shall have effect with respect to the period before the commencement of Part III of the new Act.

(2) The accounts for the said period which, but for the commencement of the said Part III would have been audited in India, shall be audited under Part VII of the new Act as if they were accounts of the Governor-General in Council, but the Auditor-General of India shall transmit to the Secretary of State such information as is necessary to enable him properly to perform the duties mentioned in the subsequent provisions of this paragraph.

(3) The accounts for the said period which, but for the commencement of Part III of the new Act, would have been audited in England by the auditor of the accounts of the Secretary of State in Council shall be audited by the Auditor of Indian Home Accounts, who shall have the like powers and perform the same duties in relation thereto as the auditor of the account of the Secretary of State in Council would have had if the new Act had not been passed, except that anything to be done by or to the Secretary of State in Council shall be done by or to the Secretary of State ; and sub-section (3) of section twenty-seven of the old Act and paragraph nine of the Order in Council of nineteen hundred and twenty relating to the duties of the High Commissioner shall apply accordingly.

Sub-sections (4) and (5) of section one hundred and seventy of the new Act shall not apply in relation to the functions of the Auditor of Indian Home Accounts under this paragraph.

(4) The Secretary of State shall, notwithstanding the repeal of sub-sections (1) and (2) of section twenty-six of the old Act, lay before both Houses of Parliament of the same accounts and estimates as the Secretary of State in Council would under those sub-sections have been required so to lay.

14.—(1) Anything which under the provisions of the new Act or of any Order or rules made thereunder, is required or authorised to be done by, to or before the Governor of a Province (whether or not the Governor is to act in his discretion or to exercise his individual judgment) shall, before the commencement of Part III of the new Act, be done by, to or before the Governor in Council or, in the case of Sind or Orissa, the Governor.

(2) The provisions of section two hundred and sixty-one of the new Act, which require the Secretary of State not to exercise certain powers except with the concurrence of his advisers, shall, in relation to any prospective exercise of those powers before the commencement of Part III of the new Act, be deemed to be satisfied if he exercises those powers with the concurrence of the majority of votes at a meeting of the Council of India.

15.—(1) For a period of twelve months from the date of the commencement of Part III of the new Act a person who immediately before the said date was holding an office under the Crown in India shall not be disqualified from continuing to hold that office by reason of the fact that he is not a British subject and that no declaration entitling him to hold the office has been made under section two hundred and sixty-two of the new Act.

(2) Until other provision is made under the new Act, the conditions of service applicable to any person or any class of persons appointed or to be appointed to serve His Majesty in a civil capacity in India shall be the same as were applicable to that person or, as the case may be, to persons of that class immediately before the commencement of Part III of the new Act.

16. The provisions of this Order shall be in addition to, and not in derogation of, the provisions of section thirty-seven of the Interpretation Act, 1889.

M. P. A. Hankey.

THE GOVERNMENT OF INDIA (DISTRIBUTION OF REVENUES) ORDER, 1936.

AT THE COURT AT BUCKINGHAM PALACE.

The 3rd day of July, 1936.

PRESENT :

THE KING'S MOST EXCELLENT MAJESTY IN COUNCIL.

WHEREAS by sub-section (1) of section one hundred and thirty-eight of the Government of India Act, 1935 (hereafter in this Order referred to as "the Act"), it is provided that taxes on income other than agricultural income shall be levied and collected by the Federation, but that (subject to the provisions of the said sub-section with respect to surcharges for Federal purposes) a percentage to be prescribed by his Majesty in Council of the net proceeds in any financial year of any such tax, except in so far as those proceeds represent proceeds attributable to Chief Commissioners' Provinces or to taxes payable in respect of Federal emoluments, shall be assigned to the Provinces and to the Federated States, if any, with in which that tax is leviable in that year, and shall be distributed among the Provinces and those States in such manner as may be prescribed by His Majesty in Council :

AND WHEREAS by sub-section (2) of the said section one hundred and thirty-eight the Federation is, notwithstanding anything in sub-section (1) of that section, authorised to retain out of the moneys assigned by the said sub-section (1) to Provinces and States—

(*a*) in each year of a period to be prescribed by His Majesty in Council such sum as may be so prescribed ;

(*b*) in each year of a further period to be so prescribed a sum less than that retained in the preceding year by an amount, being the same, amount in each year, so calculated that the sum to be retained in the last year of the period will be equal to the the amount of each such annual reductions :

AND WHEREAS by sub-section (2) of section one hundred and forty of the Act it is provided that one-half, or such greater proportion as His Majesty in Council may determine, of the net proceeds in each year of any export duty on jute or jute products shall be assigned to the provinces or Federated States in which jute is grown in proportion to the respective amounts of jute grown therein :

AND WHEREAS by section one hundred and forty-two of the Act it is provided that such sums as may be prescribed by His Majesty in Council shall be charged on the revenues of the Federation in each year as grants in aid of the revenues of such Provinces as His Majesty may determine to be in need of assistance :

AND WHEREAS by virtue of the provisions of Part XIII of the Act references in the sub-sections and sections aforesaid to the Federation are, as respects the period elapsing between the commencement of Part III of

the Act and the establishment of the Federation, to be construed as references to the Governor-General in Council :

AND WHEREAS a draft of this Order has been laid before Parliament in accordance with the provisions of sub-section (1) of section three hundred and nine of the Act and an Address has been presented to His Majesty by both Houses of Parliament praying that an Order may be made in the terms of this Order :

NOW, THEREFORE, His Majesty, in the exercise of the powers conferred on him as aforesaid and of all other powers enabling him in that behalf, is pleased, by and with the advice of His Privy Council, to order, and it is hereby ordered, as follows :—

Introductory.

1. This Order may be cited as "The Government of India (Distribution of Revenues) Order, 1936."

2. The Interpretation Act, 1889, applies for the interpretation of this Order as it applies for the interpretation of an Act of Parliament.

3. As respects the period elapsing between the commencement of Part III of the Act and the establishment of the Federation, references in this Order to the Federation shall be construed as references to the Governor-General in Council.

4. Any reference in this Order to a year shall be construed as a reference to a period of twelve months beginning on the first day of April.

Taxes on income.

5. The percentage which under sub-section (1) of section one hundred and thirty-eight of the Act is to be prescribed by His Majesty in Council shall be fifty per cent., and the sums falling to be distributed under that sub-section in any year among the Provinces shall be distributed as follows :—

	Per cent.
Madras	15
Bombay	20
Bengal	20
The United Provinces	15
The Punjab	8
Bihar	10
The Central Provinces and Berar ..	5
Assam	2
The North-West Frontier Province ..	1
Orissa	2
Sind	2

6.—(1) The first of the periods to be prescribed by His Majesty in Council under sub-section (2) of the said section one hundred and thirty-eight shall be five years from the commencement of Part III of the Act, and the sum to be retained by the Federation under that sub-section shall, in each of those years, be either the whole of the moneys assigned by sub-section (1) of the said section to Provinces and States, or such part thereof as will together with—

(*a*) the Federation's share of the divisible net proceeds of the taxes on income for that year ; and

(*b*) the sum, if any, to be brought into account by the Federation under sub-paragraph (3) of this paragraph, amount to thirteen crores of rupees, whichever is the less.

(2) In this paragraph, "the divisible net proceeds of the taxes on income" means the net proceeds of the taxes on income to which the said section one hundred and thirty-eight relates, except in so far as they represent proceeds attributable to Chief Commissioners' Provinces or to taxes payable in respect of Federal emoluments, or proceeds of any surcharge for Federal purposes.

(3) The sum, if any, to be brought into account by the Federation in any year for the purposes of sub-paragraph (1) of this paragraph shall be a sum to be ascertained by applying to the accounts of the railways, with such alterations in accounts as are necessitated by the separation of Burma, the principles laid down in the Resolution of the Legislative Assembly of the twentieth day of September nineteen hundred and twenty-four, and ascertaining in accordance with those principles what sum, if any, would be the net amount payable for that year under clauses (2) and (3) of that Resolution to general revenues out of the net receipt of the railways :

Provided that for the purpose of ascertaining the net amount so payable to general revenues borrowings from the depreciation fund before the commencement of Part III of the Act shall be deemed not to be repayable and arrears of contributions to general revenues for any year before the commencement of the said Part III shall be deemed not to be payable.

7. The second period to be prescribed by His Majesty in Council under sub-section (2) of the said section one hundred and thirty-eight shall be five years from the expiration of the first period prescribed thereunder.

Jute Export Duty.

8. The proportion of the net proceeds in each year of any export duty on jute or jute products which under sub-section (2) of section one hundred and forty of the Act is to be assigned to the Provinces or Federated States in which jute is grown shall be sixty-two and one-half per cent.

Grants-in-aid to Certain Provinces.

9. There shall be charged on the revenues of the Federation as grants in aid of the revenues of the Provinces mentioned in the Schedule to this Order the sums specified in that Schedule in relation to those Provinces respectively, in each of the years so specified.

M. P. A. Hankey.

SCHEDULE.

GRANTS TO CERTAIN PROVINCES.

1. The United Provinces :

25 lakhs of rupees in each year of the first five years from the commencement of Part III of the Act.

2. Assam :

30 lakhs of rupees in each year.

3. The North-West Frontier Province :

100 lakhs of rupees in each year.

4. Orissa.

In the first year after the commencement of Part III of the Act, 47 lakhs of rupees ; in each of the next four succeeding years, 43 lakhs of rupees , and in every subsequent year, 40 lakhs of rupees

5. Sind :

In the first year after the commencement of Part III of the Act, 110 lakhs of rupees ; in each of the next nine years, 105 lakhs of rupees ; in each of the next twenty years, 80 lakhs of rupees ; in each of the next five years, 65 lakhs of rupees ; in each of the next five years, 60 lakhs of rupees ; and in each of the next five years, 55 lakhs of rupees.

THE GOVERNMENT OF INDIA (PROVINCIAL ELECTIONS) (CORRUPT PRACTICES AND ELECTION PETITIONS) ORDER, 1936.

AT THE COURT AT BUCKINGHAM PALACE.

The 3rd day of July, 1936.

PRESENT :

THE KING'S MOST EXCELLENT MAJESTY IN COUNCIL.

WHEREAS by section two hundred and ninety-one of the Government of India Act, 1935 (hereafter in this Order referred to as " the Act "), His

Majesty in Council is empowered to make provision with respect to certain matters connected with elections under the Act :

AND WHEREAS by sub-section (1) of section sixty-nine of the Act His Majesty in Council is empowered to declare certain offences and practices to be offences and practices involving disqualification for membership of Provincial Legislatures and to fix the periods for which the disqualifications are to operate :

AND WHEREAS a draft of this Order has been laid before Parliament in accordance with the provisions of sub-section (1) of section three hundred and nine of the Act and an Address has been presented to His Majesty by both Houses of Parliament praying that an Order may be made in the terms of this Order :

NOW, THEREFORE, His Majesty, in the exercise of the powers conferred on him as aforesaid and of all other powers enabling him in that behalf, is pleased by and with the advice of his Privy Counil to order, and it is hereby ordered, as follows :—

PART I.

INTRODUCTORY.

1. This Order may be cited as "The Government of India (Provincial Elections) (Corrupt Practices and Election Petitions) Order, 1936."

2. The Interpretation Act, 1889, applies for the interpretation of this Order as it applies for the interpretation of an Act of Parliament.

3.—(1) In this Order, except where it is otherwise expressly provided or the context otherwise requires—

"election" means an election to fill a seat or seats in either Chamber of the Provincial Legislature ;

"prescribed" means prescribed by Act of the Provincial Legislature or by Rules ;

"Rules" means rules made under paragraph twenty of the Fifth Schedule to the Act ;

"sign" in relation to a person who is unable to write his name means authenticate in such manner as may be prescribed ;

"oath" includes affirmation.

(2) The provisions of Parts II and III of this Order shall, in relation to constituencies in which seats are reserved for candidates of any particular class, or in which the final voting is by members of an electoral college previously constituted for that purpose, have effect with such exceptions and subject to such adaptations and modifications as may be prescribed, but subject as aforesaid, any primary election for the purpose of electing candidates for reserved seats, or of constituting any such electoral college shall be deemed to be part of the election of persons to fill the seats to be filled in the constituency.

(3) Where under any of the provisions of this Order anything is to be prescribed, different provision may be made for different cases or classes of cases.

(4) Any reference in this Order to any of the provisions of any Indian Act shall be construed as a reference to those provisions as amended by or under any other Act or, if those provisions are repealed and re-enacted with or without modification, to the provisions so re-enacted.

(5) Anything which under the provisions of the Act or of this Order is required or authorised to be done by, to or before the Governor of a Province in connection with any matters to which this Order relates (whether or not the Governor is to act in his discretion or to exercise his individual judgment) shall before the commencement of Part III of the Act be done by, to or before the Governor in Council or, in the case of Sind or Orissa, the Governor.

PART II.

ELECTION AGENTS AND EXPENSES.

1. Every person nominated as a candidate at an election shall at the prescribed time and in the prescribed manner appoint either himself or some one other person to be his election agent.

2. No person shall be appointed an election agent who is disqualified from being an election agent under the subsequent provisions of this Order.

3.—(1) Any revocation of the appointment of an election agent, whether he be the candidate himself or not, shall be signed by the candidate, and shall operate from the date on which it is lodged with the returning officer.

(2) In the event of such a revocation or of the death of an election agent, whether that event occurs before or during the election, or after the election but before a return of the candidate's election expenses has been lodged in accordance with the provisions of the next but one succeeding paragraph, the candidate shall appoint forthwith either himself or some other person to be his election agent, and shall give notice in writing of the appointment to the returning officer.

4. Every election agent shall, for each election for which he is appointed election agent, keep separate and regular books of account, and shall enter therein such particulars of expenditure in connection with the election as may be prescribed.

5.—(1) Within the prescribed time after every election there shall be lodged with the returning officer in respect of each person who has been nominated as a candidate a return of the election expenses of that person signed both by him and his election agent.

(2) Every such return shall be in such form and shall contain such particulars as may be prescribed, and shall be accompanied by declarations in the prescribed form by the candidate and his election agent made on oath before a magistrate.

(3) Notwithstanding anything in this paragraph, where a candidate is owing to absence from India unable to sign the return of election expenses and to make the required declaration, the return shall be signed and lodged by the election agent only and shall be accompanied by a declaration by the election agent only, and the candidate shall within fourteen days after his return to India cause to be lodged with the returning officer a declaration made on oath before a magistrate in such form as may be prescribed.

6. In each Province provision shall be made, by an Act of the Provincial Legislature or by Rules, fixing the maximum scales of election expenses at elections and the numbers and descriptions of persons who may be employed for payment in connection with elections :

Provided that no provision need be so made in any Province with respect to any election held before the expiration of two years from the commencement of Part III of the Act.

7. Except so far as may be prescribed, this Part of this Order does not apply to an election by the members of a Provincial Legislative Assembly to fill seats in the Provincial Legislative Council.

PART III.

DECISION OF DOUBTS AND DISPUTES AS TO THE VALIDITY OF AN ELECTION AND DISQUALIFICATIONS FOR CORRUPT PRACTICES.

1. In this Part of this Order and in the First Schedule to this Order, except where it is otherwise expressly provided or the context otherwise requires—

"agent" includes an election agent and any person who, on the trial of an election petition, is held by the Commissioners to have acted as an agent in connection with the election with the knowledge or consent of the candidate ;

"candidate" means a person who has been or claims to have been duly nominated as a candidate at any election, and a candidate who, with the election in prospect, has held himself out as a prospective candidate, shall be deemed to have been a candidate as from the time when he began so to hold himself out ;

"electoral right" means the right of a person to stand or not to stand as, or to withdraw from being, a candidate, or to vote or refrain from voting at an election ;

"returned candidate" means a candidate whose name has been published in the prescribed manner as duly elected ;

"corrupt practice", in relation to an election by the members of a Provincial Legislative Assembly to fill seats in the Provincial Legislative Council, means one of the practices specified in Parts I and II of the First Schedule to this Order, and in relation to any other election, means one of the practices specified in Parts I, II and III of that Schedule.

2. No election shall be called in question except by an election petition presented in accordance with the provisions of this Part of this Order.

3.—(1) An election petition against any returned candidate may be presented to the Governor—

(*a*) by any candidate or elector on any ground ;

(*b*) by an officer empowered in that behalf by the Governor, exercising his individual judgment, on the ground that the election has not been a free election by reason of the large number of cases in which undue influence or bribery has been exercised or committed.

In this paragraph, "elector," in relation to a commerce and industry, mining or planting constituency, includes all the persons included in the electoral roll as the nominees of any body, notwithstanding that only one of them is entitled to vote.

(2) A petitioner may, if he so desires, in addition to calling in question the election of the returned candidate, claim a declaration that he himself has been duly elected, but such a declaration shall only be claimed on one or other of the following grounds :—

(*a*) that in fact the petitioner received a majority of the valid votes ; or

(*b*) that but for votes obtained for the returned candidate by corrupt practices, the petitioner would have obtained a majority of the valid votes.

4.—(1) Unless the Governor, exercising his individual judgment, dismisses a petition for non-compliance with the prescribed requirements, he shall, exercising his individual judgment, appoint as Commissioners for the trial of the petition three persons who are or have been, or are eligible to be appointed, judges of a High Court, and shall appoint one of them to be the President :

Provided that nothing in this sub-paragraph shall be deemed to prevent the appointment of the President of a Commission before the other Commissioners are appointed.

(2) Subject to the provisions of this paragraph, all applications and proceedings in connection with the petition shall be dealt with by, and carried on by or before, the Commissioners.

(3) Where in respect of an election in a constituency more petitions than one are presented, the Governor shall refer all those petitions to the same Commissioners, who may at their discretion inquire into the petitions either separately or in one or more groups, as they think fit.

(4) If the services of any Commissioner are not available for the purposes of the inquiry or if during the course of the inquiry any Commissioner is unable to continue to attend thereat, the Governor, exercising his individual judgment, shall appoint another Commissioner and the inquiry shall recommence before the Commission as so reconstituted :

Provided that the Commissioners may direct that any evidence already recorded shall remain upon record, and in that case it shall not be necessary to re-examine those witnesses who have already been examined and discharged.

(5) References to the Commissioners in this Part of this Order shall, as respects any matter to be done before the commencement of the inquiry, be deemed to be references to the President.

5. When at an inquiry into an election petition the Commissioners so order, the Advocate-General of the Province, or some person acting under his instructions, shall attend and shall take such part therein as the Commissioners may direct.

6. Subject to the provisions of this Part of this Order, Acts of the Provincial Legislature and Rules may regulate the form of election petitions, the time and manner in which they are to be presented, the persons who are to be made parties thereto, the procedure to be adopted in connection therewith and the circumstances in which petitions are to abate, or may

be withdrawn, and in which new petitioners may be substituted, may require security to be given for costs and may authorise the Governor, exercising his individual judgment, to dismiss petitions for non-compliance with the prescribed requirements.

7.—(1) Subject to the provisions of this paragraph, if in the opinion of the Commissioners—

(*a*) the election of a returned candidate has been procured or induced, or the result of the election has been materially affected, by any corrupt practice ; or

(*b*) any corrupt practice specified in Part I of the First Schedule to this Order has been committed in the interest of a returned candidate ; or

(*c*) the result of the election has been materially affected by the improper acceptance or rejection of any nomination, or by reason of the fact that any person nominated was not qualified or was disqualified for election, or by the improper reception or refusal of a vote, or by the reception of any vote which is void, or by any non-compliance with the provisions of the Act or of this Order, or of any Act of the Provincial Legislature or Rules relating to the election, or by any mistake in the use of any prescribed form ; or

(*d*) the election has not been a free election by reason of the large number of cases in which bribery or undue influence has been exercised or committed,

the election of the returned candidate shall be void.

(2) If the Commissioners report that a returned candidate has been guilty by an agent, other than his election agent, of any corrupt practice specified in Part I of the First Schedule to this Order, but further report that the candidate has satisfied them that—

(*a*) no corrupt practice was committed at the election by the candidate or his election agent, and the corrupt practices mentioned in the report were committed contrary to the orders, and without the sanction or connivance, of the candidate or his election agent ;

(*b*) the candidate and his election agent took all reasonable means for preventing the commission of corrupt practices at the election ;

(*c*) the corrupt practices mentioned in the report were of a trivial and limited character or took the form of customary hospitality which did not affect the result of the election ; and

(*d*) in all other respects the election was free from any corrupt practice on the part of the candidate or any of his agents,

then the Commissioners may find that the election of the candidate is not void.

(3) If a person (not being entitled so to do) votes more than once at the same election, all his votes shall be deemed for the purposes of this paragraph to be void.

8.—(1) At the conclusion of the inquiry the Commissioners shall report whether the returned candidate, or any person who has lodged a petition and claimed a seat, has been duly elected and in so reporting shall have regard to the provisions of the last preceding paragraph.

(2) The report shall further include a recommendation by the Commissioners as to the total amount of costs which are payable and the persons by and to whom the cost should be paid, and any such recommendation may include a recommendation for the payment of costs to the Advocate-General of the Province or a person acting under his instructions attending the trial in pursuance of an order of the Commissioners.

(3) The report shall be signed by all the Commissioners and the Commissioners shall forthwith forward their report to the Governor, who on receipt thereof shall issue orders in accordance with the report and publish the report in the Government Gazette of the Province, and the orders of the Governor shall be final.

9. If either in their report or upon any other matter there is a difference of opinion among the Commissioners, the opinion of the majority shall prevail and their report shall be expressed in terms of the views of the majority.

10. Where any charge is made in an election petition of nay corrupt practice, the Commissioners shall record in their report—

(*a*) a finding whether a corrupt practice has or has not been proved to have been committed by any candidate or his agent, or with the connivance of any candidate or his agent, and the nature of that corrupt practice ; and

(*b*) the names of all persons, if any, who have been proved at the inquiry to have been guilty of any corrupt practice and the nature of that practice with any such recommendations as the Commissioners may think proper to make for the exemption of any persons from any disqualifications which they may have incurred in this connection under paragraphs two to five of Part IV of this Order :

Provided that no person shall be so named in the report unless he has been given a reasonable opportunity of showing cause why his name should not be so recorded.

PART IV.

DISQUALIFICATIONS.

1. The offences and practices specified, in relation to certain elections, in the Second Schedule to this Order shall, for the periods respectively specified in relation to those offences and practices in that Schedule, entail disqualification for membership of any Provincial Legislature.

2. If any person—

(*a*) is, in connection with an election to a Provincial Legislature, the Coorg Legislative Council or a local body in British India, convicted of an offence under Chapter IXA of the Indian Penal Code punishable with imprisonment for a term exceeding six months ; or

(*b*) is after an inquiry under Part III of this Order reported as guilty of any such corrupt practice as is specified in Part I or Part II of the First Schedule to this Order,

he shall, for a period of six years from the date of the conviction or report, be disqualified for voting at any election.

3. If, in relation to any election (other than an election by the members of a Provincial Legislative Assembly to fill seats in the Provincial Legislative Council), any person is after such an inquiry as aforesaid reported as guilty of any such corrupt practice as is specified in Part III of the said Schedule he shall be disqualified for voting at any election for a period of four years from the date of the report.

4. Where under either of the two last preceding paragraphs a person is, in connection with an election in a commerce and industry, mining or planting constituency, disqualified for voting for any period, then, if that person was at the date of the election either—

(*a*) included in the electoral roll for the constituency as the nominee of a firm, Hindu joint family or corporation entitled to nominate persons for inclusion therein; or

(*b*) a member of any such firm or Hindu joint family, or a director, managing agent or manager of any such corporation, or a person authorised to sign the name of any such firm, Hindu joint family or corporation in the ordinary course of its business,

the firm, family or corporation shall, for the like period, be disqualified from nominating persons for inclusion in the electoral roll of any commerce and industry, mining or planting constituency.

5. If default is made in making the return of the election expenses of any person who has been nominated as a candidate at an election to which Part II of this Order applies, or if such a return is found, either by Commissioners holding an inquiry into the election or by any court in a judicial proceeding, to be false in any material particular, the candidate and his election agent shall be disqualified for voting at any election for a period of five years from the date by which a return was required to be lodged.

6. Every person shall be disqualified for voting at any election who is for the time being disqualified for voting at elections to the Federal Legislature by reason of misconduct in connection with an election to that

Legislature, or by reason of a default in making, or of the falsity of, any return of election expenses at any election to that Legislature.

References in this paragraph to the Federal Legislature shall until the establishment of the Federation be construed as references to the Indian Legislature.

7. Any person who is for the time being disqualified under the foregoing provisions of this Part of this Order for being a member of a Provincial Legislature, or for voting at elections, shall, so long as the disqualification exists, also be disqualified for being an election agent at any election.

8. Any disqualification under paragraphs two to five of this Part of this Order arising in connection with an election to the Legislature of, or to a local body in, a Province may be removed by the Governor of that Province in his discretion, and any other disqualification under the said paragraph two may be removed, before the establishement of the Federation, by the Governor-General in Council, and, after the establishment of the Federation, by the Governor-General in his discretion.

9. In paragraph one of this Part of this Order, "elections" include all the elections referred to in the Second Schedule to this Order, but save as aforesaid, the references in this Part of this Order to elections, other than express references to elections of any other kind, shall be construed as references to elections as defined in paragraph three of Part I of this Order.

M. P. A. Hankey.

FIRST SCHEDULE.

CORRUPT PRACTICES.

PART I.

1. Bribery, that is to say, any gift, offer or promise by a candidate or his agent, or by any other person with the connivance of a candidate or his agent, of any gratification to any person whomsoever, with the object, directly or indirectly, of inducing

(*a*) a person to stand or not to stand as, or to withdraw from being, a candidate at an election ; or

(*b*) an elector to vote or refrain from voting at an election,

or as a reward to -

(*i*) a person for having so stood or not stood, or for having withdrawn his candidature; or

(*ii*) an elector for having voted or refrained from voting.

For the purposes of this paragraph the term "gratification" is not restricted to pecuniary gratifications or gratifications estimable in money, and it includes all forms of entertainment and all forms of employment for reward ; but it does not include the payment of any expenses *bona fide* incurred at, or for the purpose of, any election and duly entered in the return of election expenses prescribed by this Order.

2. Undue influence, that is to say, any direct or indirect interference or attempt to interfere on the part of a candidate or his agent, or of any other person with the connivance of the candidate or his agent, with the free exercise of any electoral right :

Provided that -

(*a*) without prejudice to the generality of the provisions of this paragraph, any such person as is referred to therein who

(*i*) threatens any candidate or elector, or any person in whom a candidate or elector is interested, with any injury of any kind ; or

(*ii*) induces or attempts to induce a candidate or elector to believe that he, or any person in whom he is interested, will become or will be rendered an object of divine displeasure or spiritual censure,

shall be deemed to interfere with the free exercise of the electoral right of that candidate or elector within the meaning of this paragraph ;

(*b*) a declaration of public policy, or a promise of public action, or the mere exercise of a legal right without intent to interfere with an electoral right, shall not be deemed to be interference within the meaning of this paragraph.

3. The procuring or abetting or attempting to procure by a candidate or his agent, or by any other person with the connivance of a candidate or his agent, the application by a person for a voting paper in the name of any other person, whether living or dead, or in a fictitious name, or by a person for a voting paper in his own name when, by reason of the fact that he has already voted in the same or some other constituency, he is not entitled to vote.

4. The removal of a voting paper from the polling station during polling hours by any person with the connivance of a candidate or his agent.

5. The publication by a candidate or his agent, or by any other person with the connivance of the candidate or his agent, of any statement of fact which is false, and which he either believes to be false or does not believe to be true, in relation to the personal character or conduct of any candidate, or in relation to the candidature or withdrawal of any candidate, being a statement reasonably calculated to prejudice the prospects of that candidate's election.

6. The incurring or authorising by a candidate or his agent of expenditure, or the employment of any person by a candidate or his agent, in contravention of this Order of any Act of the Provincial Legislature or Rules.

PART II.

1. Any act specified in Part I of this Schedule, when done by a person who is not a candidate or his agent or a person acting with the connivance of a candidate or his agent.

2. The application by a person at an election for a voting paper in the name of any other person, whether living or dead, or in a fictitious name, or for a voting paper in his own name when, by reason of the fact that he has already voted in the same or some other constituency, he is not entitled to vote.

3. The receipt of, or agreement to receive, any gratification whether as a motive or a reward—

(*a*) by a person for standing or not standing as, or for withdrawing from being, a candidate ; or

(*b*) by any person whomsoever for himself or any other person for voting or refraining from voting, or for inducing or attempting to induce any elector to vote or refrain from voting, or any candidate to withdraw his candidature.

For the purposes of this paragraph the term "gratification" has the same meaning as it has for the purposes of paragraph one of Part I of this Schedule.

4. The making of any return of election expenses which is false in any material particular, or the making of a declaration verifying any such return.

PART III.

1. The incurring or authorisation by any person other than a candidate or his agent of expenses on account of holding any public meeting, or upon any advertisement, circular or publication, or in any other way whatsoever, for the purpose of promoting or procuring the election of the candidate, unless he is authorised in writing so to do by the candidate.

2. The hiring, using or letting, as a committee room or for the purpose of any meeting to which electors are admitted, of any building, room or other place where intoxicating liquor is sold to the public.

3. The issuing of any circular, placard or poster having a reference to the election which does not bear on its face the name and address of the printer and publisher thereof.

SECOND SCHEDULE.

DISQUALIFICATIONS FOR MEMBERSHIP OF PROVINCIAL LEGISLATURES.

Elections.	Offence or Corrupt Practice.	Period of Disqualification.
Elections to which Chapter IXA of the Indian Penal Code applies.	Offences under Chapter IXA of the Indian Penal Code punishable with imprisonment for a term exceeding six months.	Six years from the date of conviction.
Elections as defined in paragraph three of Part I of this Order.	Corrupt practices specified in Parts I and II of the First Schedule to this Order.	Six years from the date of the report of the tribunal holding the inquiry.
Elections as defined in paragraph three of Part I of this Order, other than elections by the members of a Provincial Legislative Assembly to fill seats in the Provincial Legislative Council.	Corrupt practices specified in Part III of the First Schedule to this Order.	Four years from the date of the report of the tribunal holding the inquiry.
Elections to Federal Legislature.	Corrupt practices as defined in any Order under the Act relating to such elections.	The period for which the corrupt practice entails disqualification for membership of Federal Legislature.
Elections under the Government of India Act.	Any corrupt practice within the meaning of the Electoral Rules under the Government of India Act relating to the election in question.	Such period, commencing on the date of the report of the Commissioners under the Electoral Rules relating to the election in question, as is the maximum period of disqualification specified in those Rules for inclusion in electoral rolls thereunder.

W. H. LEWIS,
Addl. Secy. to the Govt. of India.

INDIAN AUDIT DEPARTMENT.

NOTIFICATION

LEAVE AND APPOINTMENTS.

Simla, the 23rd July 1936.

No. 1924-G.B.E., 103-36. The following events in the Indian Audit Department are notified :

With effect from the 18th October 1935.

The lien of Mr. J. C. Nixon, C.S.I., C.I.E., I.C.S., on a post of Accountant-General, Class I, is suspended.

* * * *

Mr. E. T. Coates, I.C.S., is promoted provisionally to Class II of Accountants-General.

E. BURDON,
Auditor-General in India.

DEPARTMENT OF INDUSTRIES AND LABOUR.

NOTIFICATION.

Simla, the 23rd July 1936.

No. Eccl. 93.—The Most Reverend Foss Westcott, M.A., D.D., having resumed charge of his duties as Lord Bishop of Calcutta and Metropolitan in India and the Island of Ceylon on the forenoon of the 20th July 1936, the unexpired portion of the furlough granted to him in this Department's Notification No. Eccl.-93, dated the 24th April 1936, is hereby cancelled.

A. G. CLOW,
Secy. to the Govt. of India.

DEFENCE DEPARTMENT.

Simla, the 25th July 1936

Part B.

CANTONMENTS—REGULATIONS

No. 522.—In exercise of the powers conferred by section 280 of the Cantonments Act, 1924 (II of 1924), the Governor-General in Council is pleased to direct that the following further amendment shall be made in the Cantonment Account Code, 1924, the same having been previously published as required by sub-section (1) of the said section, namely :—

For Schedule I to the said Code the following Schedule shall be substituted, namely :—

"SCHEDULE I.

[See Rule 84 (3).]

Rules regulating the destruction of cantonment accounts records.

Class I.—Shall be retained permanently—

(1) General Cash Book (Form No. Cant. 8-B).

(2) Provident Fund Ledger (Form No. Cant. 16-B).

(3) Register of immovable property (Form No. Cant. 24-B).

(4) Annual accounts (rule 40).

(5) Register of loans (Form No. Cant. 27-B).

(6) Register of investments (Form No. Cant. 28-B).

(7) Security deposit register (Form No. Cant. 29-B).

(8) Such other records as the Cantonment Authority may decide to be of permanent interest.

Class II.—Shall not be destroyed until 35 years after conclusion of audit—

(1) Pay bills of employees in receipt of pay of less than Rs. 20 per mensem

Class III.—Shall not be destroyed until ten years after conclusion of audit—

(1) Vernacular registers of which there are English counterparts or abstracts which are retained permanently.

(2) Assessment lists.

(3) Registers in the nature of demand and collection registers.

(4) Scale register (Form No. Cant. 13-B).

(5) Cash books other than the General Cash Book.

(6) Register of movable property (Form No. Cant. 25-B).

(7) Register of permanent advances (Form No. Cant. 19-B).

Class IV.—Shall not be destroyed until six years after conclusion of audit—

(1) Acquittance rolls of employees in receipt of pay of less than Rs. 20 per mensem and those of other employees as well as pay bills of all employees for whom service books are maintained.

Class V.—Shall not be destroyed until five years after conclusion of audit—

(1) Subsidiary cash register (Form No. Cant. 3-B).

(2) Classified abstract (Form No. Cant. 9-B).

(3) Personal ledger (Form No. Cant. 12-B-2).

(4) Register of works (Form No. Cant. 21-B).

(5) Measurement book (Form No. Cant. 22-B).

(6) Register of advances or deposits (Form No. Cant. 11-B).

Class VI.—Shall not be destroyed until three years after conclusion of audit—

All records other than those mentioned in Classes I to V."

G. R F. TOTTENHAM,
Secy. to the Govt. of India.

HOME DEPARTMENT.

NOTIFICATION.

POLICE.

Simla, the 23rd July 1936.

No. F. 21/XV/35.—The Home Department notification No. F. 21/XV/35, dated the 13th March 1935, withdrawing the exemption conferred by sub-rule (1) of rule 3 of the Indian Arms Rules, 1924, on Bhai Mohindar Singh Ahluwalia of Batala, district Gurdaspur, Punjab, in respect of the prohibitions and directions contained in the Indian Arms Act, 1878 (XI of 1878), is hereby cancelled.

M. G. HALLETT,
Secy. to the Govt. of India.

Registered No. C207

The Calcutta Gazette

THURSDAY, AUGUST 6, 1936.

PART IB

Educational Notices.

State Medical Faculty of Bengal.

Grosvenor House, Calcutta, the 30th July 1936.

NOTICES.

No. 3077F. —The written part of the ensuing Compoundership Examination of this Faculty will be held on Monday, the 21st September 1936, at 12 noon.

The examination of candidates from the Dacca, the Chittagong and the Lytton Medical School, Mymensingh, will be held at the Dacca Medical School and that of other candidates in the Examination Hall of the Calcutta Medical College.

The time and place for holding the oral and practical examinations will be announced later.

Applications and fees for admission to the above examinations will be received in this office up to 31st August 1936.

No. 3078F. —The ensuing Dressership Examination of the Faculty of candidates from the Dacca, the Chittagong and the Lytton Medical School, Mymensingh, will be held in the Surgical Wards of the Mitford Hospital, Dacca, and that of other candidates in the Surgical Wards of the Campbell Medical School and Hospital, Sealdah, Calcutta, respectively, on Saturday, the 26th, and on Tuesday, the 29th September 1936, at 9 a.m.

Applications and fees for admission to the examination will be received in this office up to the 5th September 1936.

No. 3080F.—The written part of the examinations for the Senior and Junior Certificates in General Nursing and the Senior and Junior Certificates in Maternity Nursing *under the old regulations* will be held in the Examination Hall of the Calcutta Medical College on the following days and in the following order :—

Date.	From 11 a.m. to 2p.m.
Senior and Junior Nursing Certificate Examinations.	
1936.	
Monday, 5th October ..	Anatomy, Physiology and Hygiene.
Tuesday, 6th „ ..	General (Medical and Surgical) Nursing.
Senior and Junior Midwife Certificate Examinations.	
1936	
Wednesday, 7th October ..	Midwifery.
Thursday, 8th „ ..	Obstetrical Nursing.

The time and place for holding the oral and practical examinations in each subject will be announced later

Applications and fees for admission to the above examinations will be received in this office up to 4th September 1936.

No. 3081F. —The written part of the ensuing Preliminary Examinations for the Senior and Junior Certificates in General Nursing and the examinations for the Senior and Junior Certificates in Maternity Nursing under the revised regulations promulgated under Government of Bengal notification No 2840 Medl., dated the 11th September 1934, will be held at the Examination Hall of the Calcutta Medical College on Friday, the 9th October 1936, at 11 a.m.

The time and place for holding the oral and practical examinations will be announced later.

Applications and fees for admission to the above examinations will be received in this office up to the 4th September 1936.

R. M. Das, *Secretary.*

Office of the Inspector of Schools, Presidency Division.

40/1A, Free School Street, Calcutta, the 13th July 1936.

NOTIFICATION.

Rules for the guidance of the private candidates for the Test Examination for admission to the Matriculation Examination for 1937.

A Test Examination of private candidates for permission to appear at the Matriculation Examination of the Calcutta University to be held in March 1937, will be held in the Senate Hall, Calcutta, or at any other place, which may be notified hereafter from Thursday, the 26th November 1936, according to the programme annexed hereto.

2. Applications for permission to appear at the Test Examination of private candidates should be made in printed forms only to be obtained *in person* from the office of the Inspector of Schools, Presidency Division. Candidates desirous of appearing at a muffasil centre should obtain forms from the Head Master of the Government School concerned.

3. Private candidates are those who have not attended any school, recognised or unrecognised, imparting general education for at least one year previous to the Matriculation Examination.

4. Private candidates are broadly divided into two groups, viz.—

(A) Candidates coming from within the territorial jurisdiction of the Calcutta University.

(B) Candidates coming from outside the territorial jurisdiction of the Calcutta University who have resided for one year or more in Calcutta or in one of the districts of the Presidency Division.

5. Each of these groups is again subdivided into the following four classes :—

(*i*) Candidates who once read at schools but since leaving them will have been out of school for at least one year up till 1st March 1937.

(*ii*) Candidates who have never read at any school.

(*iii*) *Bona-fide* teachers employed at schools recognised by any University or any Board of Secondary Education.

(*iv*) Teachers employed in other schools, *e.g.*, Primary Schools, Middle Schools, Junior Madrasahs, etc.

6. Every candidate for the Test Examination must produce—

(*a*) An affidavit in the appended form A sworn before a competent authority in Bengal by the candidate's father or his legal guardian (if the father is dead). Two copies of the candidate's photo, one affixed to the affidavit which should be duly attested by the swearer of the affidavit and the Magistrate and the other to be affixed to the application duly attested by the candidate and his father and guardian.

(*b*) If he had previously attended any school a transfer certificate (bearing the school stamp) from the school in which he last read or the admit card if he failed at the last or any previous Matriculation Examination or the Test Examination held by the Inspector of Schools, Presidency Division.

7. Candidates under class (*iii*) of rule 5 are exempt from appearing at the Test Examination. They should apply to the Registrar, Calcutta University, for necessary permission in accordance with the procedure laid down in his Notification No. 283/OUP, dated 15th May 1935.

8. Besides fulfilling the appropriate conditions as laid down for the foregoing three classes a candidate under class (*iv*) of rule 5 must produce a certificate of employment duly signed or countersigned by the District Inspector of Schools of the district.

9. *B group candidates* (*vide* rule 4) *whether ever read in any school or not, shall in addition produce* (*i*) *necessary permission from the University of Calcutta* commonly called migration certificate in terms of its circular No. S/272/O.U.Pri., dated the 16th June 1934, published at page 938, Part IB of the *Calcutta Gazette*, dated the 19th July 1934.

10. Every candidate must attach to his application a copy of the chalan showing the deposit of the prescribed fee at a treasury or sub-treasury in Bengal. (*See* also rule 15.)

11. No candidate under "group A" (*i.e.*, Bengali or Assamese), whose father or guardian is not a native or a permanent resident of or permanently employed in any district of the Presidency Division including Calcutta, will be admitted to the Test Examination to be held by or under orders of the Inspector of Schools, Presidency Division.

12. A student, who failed to pass the annual examination for promotion to class X at the end of the year 1935 and then left school, will, in no circumstances, be allowed to appear at the Test Examination of 1936. But a student who failed to pass the Matriculation Examination of the Calcutta University, held in March 1936 will be admitted to the ensuing Test Examination.

13. No candidate who has not completed the period required for reaching class X calculated from the date of his leaving the school and completing one year thereafter will be admitted to the Test Examination.

14. Any candidate desirous of taking up Hygiene for the Matriculation Examination shall submit along with his application a certificate from a registered medical practitioner or a recognised teacher of Hygiene to the effect that the candidate has been undergoing training in that subject under him. The registered medical practitioner should give his registration number for his identification.

15. The admission fee for the examination is Rs. 6 for each candidate to be examined in Calcutta and Rs. 5 for candidates to be examined in other centres. The fee for examination must be deposited into a Government Treasury or Subtreasury in Bengal and the chalan showing the deposit attached to the application (*vide* rule 10). No money order or cheque will be received in this office in payment of fees for the Test Examination. *In no circumstances will this admission fee be refunded.*

16. Admission cards for the Test Examination will be sent *by post.*

17. (*a*) Candidates residing in or within easy reach of Calcutta must appear at the Calcutta Examination centre.

(*b*) Those who reside at out-of-the-way places may, as a special case, be permitted to sit for the Test Examination at the nearest Government High English Schools. Applications from such candidates must be submitted through the head masters of the nearest Government High Schools. *They must, however, fulfil all the requisite conditions laid down in the foregoing rules.* The permission will only be granted if the head masters concerned recommend their cases.

Admission cards of these candidates will be distributed by the respective head masters.

18. The results of the Test Examination will be declared and put up on the notice board of this office on the 4th January 1937.

19. Application forms with forms for depositing fees at the Imperial Bank of India for permission to appear at the Matriculation Examination to be held in March 1937 will be given to and received back from the successful candidates of the Test Examination on the following dates arranged according to their roll numbers at the Test Examination :—

7th January—Roll Nos. 1—200.

8th January—Roll Nos. 201—400.

9th January—Roll Nos. 401—600.

11th January—Roll Nos. 601—800.

12th January—Roll Nos. 801—1000 and above.

Such application form will have to be signed by each successful candidate in the presence of an officer attached to this office.

20. The application form countersigned by this office will be returned to the candidates personally on the following dates :—

14th January—Test Roll Nos. 1—350.

15th January—Test Roll Nos. 351—700.

16th January—Test Roll Nos. 701 and above.

21. Candidates allowed to appear at the Matriculation Examination on passing the Test Examination shall deposit their fees at the Imperial Bank of India on or before 13th January 1937 and a copy of receipt showing the deposit shall be attached to the application.

22. The dates for distribution of University admission cards for the Matriculation Examination will be notified in the office notice board on or about the 24th February 1937. *The admission cards on no account will be sent to candidates by post.* The candidates must produce their admission cards for Test Examination as well as the University receipts showing the deposit of fees to obtain the University admission cards.

23. Candidates successful at the University examination may receive their Matric Pass Certificate on or about the 15th January 1938 but in no case later than the 15th of April 1938 on tending personally or by agent the University admission card. All undistributed certificates will be returned to the Controller of Examinations on the 15th April 1938.

24. Incomplete applications for the Test Examination will be rejected without any reference to the candidates. They should therefore see that complete particulars and documents are furnished. Applications must bear the signatures of the candidates in full. Those which will contain any initial will be rejected.

25. Applications in the prescribed form must reach the office of the Inspector of Schools, Presidency Division, on or before the 31st August 1936.

26. No paper either the application or any of its enclosures will be returned to the candidate after the examination is over.

M. A. JAAFAR,

Inspector of Schools, Presidency Division.

Programme of Test Examination.

Thursday, 26th November—

Morning, 10-30 a.m. to 1 p.m.—English, 1st paper.

Afternoon 2 p.m. to 4-30 p.m.—English, 2nd paper.

Friday, 27th November—

Morning, 10-30 a.m. to 1 p.m.—Compulsory Mathematics.

Afternoon, 2 p.m. to 4-30 p.m.—Vernacular language.

Saturday, 28th November—

Morning, 10-30 a.m. to 1 p.m.—Compulsory Classical language.

Afternoon, 2 p.m. to 4-30 p.m.—Additional Classical language.

Monday, 30th November—

Morning, 10-30 a.m. to 1 p.m.—History.

Afternoon, 2 p.m. to 4-30 p.m.—Additional Mathematics.

Tuesday, 1st December—

Morning, 10-30 a.m. to 1 p.m.—Geography.

Afternoon, 2 p.m. to 4-30 p.m.—Mechanics.

Wednesday, 2nd December—

Morning, 10-30 a.m. to 1 p.m.—Hygiene.

Appendix A.

I.....son of.....an inhabitant of village.....thana.....district.... and now residing at.....by caste..... by profession or occupation.....do hereby solemnly declare—

(1) that.....whose photo is affixed hereto below duly attested is my son/is a son of late.....and a.....of mine and I am his legal guardian.

(2) That he has been residing in Calcutta/at .....district.....since.....

(3) That he is a candidate for the Test Examination of the private candidates to be held by the Inspector of Schools, Presidency Division, for the Matriculation Examination of 1937.

(4) That to my best knowledge and information he was born on.....of 13 B.S. corresponding to.....of the Christian era; his age on 1st March 1937 being calculated to be ..... years.....months.

(5) That he has never read in any school recognised or unrecognised by any University or the Board of Secondary Education or the Education Department of Government since his childhood/since his leaving.....school or appearing at the Matriculation Examination as shown by the Transfer Certificate/Admission card enclosed with the application.

(6) That he has been subject to proper tuition and discipline all along and has made satisfactory progress in studies.

(7) That he bears a good moral character and his conduct is satisfactory.

(8) That the above statements are true to my best knowledge and information.

Appendix B.

Presidency Division.

Test Examination of private candidates for the Matriculation Examination, 1937.

(This application must reach the office of the Inspector of Schools, Presidency Division, on or before the 31st August 1936, after which on no account it will be accepted.)

APPLICATION.

To the Inspector of Schools, Presidency Division.

Sir,

I request permission to present myself at the ensuing Test Examination of the private candidates for the Matriculation Examination of 1937.

I enclose herewith the following papers as required under the rules :—

(here enumerate the documents attached.)

I am,

Sir,

Yours obediently,

(Signature of the applicant.).....

Present address (in full).....

I declare that the annexed particulars are true, that I am a permanent resident of the Presidency Division/permanently employed in the Presidency Division as.....

(Signature).....

Father or legal guardian (if father is dead)

Address.....

Particulars to be filled in by the candidate.

1. Name of candidate.....

2. (*a*) Father's name.....

   (*b*) If father is dead, then also legal guardian's name with relationship .....

3. Caste or religion, nationality.....

4. Permanent residence.....

   (*a*) Village or street.....

   (*b*) Post Office or town.....

   (*c*) District.....

5. Period of stay at the present address.

6. Age of the candidate on the 1st March 1937 and date of birth.....

7. (*a*) Name of the school and the class in which the candidate last studied.....

(*b*) Whether recognised or not at the time of the candidate's attendance.....

8. Date of last attendance in the school whether recognised or unrecognised.....

9. The name of centre at which he intends to appear at the Test Examination.....

10. Name of vernacular for translation (*a*) from and (*b*) to (any of the following) :—

Urdu, Bengali, Hindi.

11. Name of the compulsory second language (any of the following) :—

Arabic, Persian, Sanskrit, Pali, Urdu, Bengali, Hindi.

12. Name of compulsory vernacular (any of the following) :—

Urdu, Bengali, Hindi.

13. Additional subjects to be taken up (any two of the following) :—

(*i*) Additional Mathematics.

(*ii*) Additional paper in a classical language.

(*iii*) History.

(*iv*) Geography.

(*v*) Elementary Mechanics.

(*vi*) Hygiene. (State whether the requisite certificate from a Registered Medical Practitioner or a recognised Teacher of Hygiene is attached) (*vide* rule 14).

N.B.—In items Nos. to the subject or subjects the candidate desires to take up should be retained and the rest scored through. If the vernacular of a candidate is a language not included in the above list he shall have alternative questions in the place of translation in English, 1st paper, and an alternative paper in English Composition for the vernacular (compulsory) paper.

Answers in History, Geography or Hygiene in a script other than English and Bengali will not be accepted at the Test Examination. Non-Bengali candidates must therefore give answers to questions in these papers in English if they are not familiar with Bengali.

No subjects other than those mentioned above will be admissible for examination.

14. The name of the centre at which he intends to appear at the Matric Examination.....
.....

Orders by the Executive Council of the University of Dacca, dated the 18th July 1936.

Ramna, Dacca, the 18th July 1936.

B. A. Examination, 1936.

The undermentioned candidates have been admitted to the Degree of Bachelor of Arts on the results of the examination held in February and June 1936 :—

B. A. Degree with honours.

(In alphabetical order.)

Roll No.	Name of Hall.	Names of candidates.
	English.	
	First Class.	
239	Jagannath	.. Satyendrakumar Chakrabarti.
	Second Class.	
226	Salimullah Muslim	.. A. F. M. Muzaffor Ahmed.
237	Ditto	.. Muhammad Abdul Awwal.
240	Ditto	.. Syed Muazzam Husain.
	Third Class.	
227	Salimullah Muslim	.. Abdur Rahman.
229	Ditto	.. Abu Nasr Muhammad Nazirul Haq.
230	Ditto	.. Abu Sayid Muhammad Abdul Aziz.
232	Ditto	.. Bashiruddin Khan.
234	Jagannath	.. Jnanranjan Datta.
241	Salimullah Muslim	.. Syed Muhammad Maswood.
	Bengali.	
	Second Class.	
244	Dacca	.. Krishnanath Goswami.
	Third Class.	
242	Jagannath	.. Digindralal Sen.
243	Salimullah Muslim	.. Kazi Mohammed Hossain.
	Arabic.	
	First Class.	
245	Salimullah Muslim	.. Abul Fazl Muhammad Badruzzaman Pathan.
248	Ditto	.. Syed Abdul Halim.
	Second Class.	
246	Salimullah Muslim	.. Muhammad Amirul Haq.
	Islamic Studies.	
	First Class.	
250	Salimullah Muslim	.. Abul Khair Muhammad Abdul Latif.
253	Ditto	.. Muhammad Abdul Aziz.
256	Ditto	.. Muhammad Fauzul Kabir.
	Second Class.	
251	Salimullah Muslim	.. Hafiz Ahmad.
252	Ditto	.. Mahbubur Rahman.
	Third Class.	
249	Salimullah Muslim	.. Abul Farah Muhammad Hujjatullah.
254	Ditto	.. Muhammad Abdul Huq.
255	Ditto	.. Muhammad Azizur Rahman.
258	Ditto	.. Muhammad Shahabuddin.
260	Ditto	.. Sayed Abul Abrar Ghulam Jilani.
	Persian.	
	First Class.	
262	Salimullah Muslim	.. Qazi Muhammad Amir Husain.
	Second Class.	
261	Jagannath	.. Harendrachandra Pal.
	Philosophy.	
	Second Class.	
265	Dacca	.. (Mrs.) Santimayi Basu.
	Third Class.	
264	Jagannath	.. Manindranath Ghosh.
266	Ditto	.. Satyeschandra Sengupta.
	History.	
	Second Class.	
268	Salimullah Muslim	.. Abul Khair Muhammad Muzammil Husain.
269	Dacca	.. (Miss) Kamala Ray.
270	Salimullah Muslim	.. Muhiuddin Ahmad.
	Third Class.	
271	Salimullah Muslim	.. Muhammad Is-haq.
273	Jagannath	.. Ratischandra Das.
274	Dacca	.. Sukhamay Sen.
	Economics.	
	First Class.	
292	Jagannath	.. Sukhamay Ray.
	Second Class.	
276	Salimullah Muslim	.. Abul Khair.
279	Jagannath	.. Binaykumar Dasgupta.
281	Dacca	.. Haridas Chakrabarti.
282	Ditto	.. Jatindranath Mahalanabis.
284	Ditto	.. (Miss) Kamala Gupta.
285	Salimullah Muslim	.. Khwaja Muhammad Idris.
287	Ditto	.. Md. Azizul Huq.
289	Ditto	.. Muhammad Husain Khan.
	Third Class.	
275	Salimullah Muslim	Abdul Halim.
277	Ditto	.. Abu Syed Muhammad Shamsuzzaman.
280	Dacca	.. Durbalranjan Deb.
286	Salimullah Muslim	Makhluquer Rahman.
288	Ditto	.. Mohammed Nurul Ameen Siddique.
291	Ditto	.. Sirajul Islam.

Roll No.	Name of Hall.	Names of candidates.
	Mathematics.	
	Second Class.	
293	Dacca ..	Manindrakumar Ray.

B. A. Ordinary Degree.

The undermentioned candidates who have failed to qualify for Honours but have obtained the necessary aggregate for a Pass Degree are admitted to the Ordinary Degree of Bachelor of Arts :—

Roll No.	Name of Hall.	Names of candidates.
	Honours School of English.	
238	Salimullah Muslim ..	Nur Ahmad Khan.
	Honours School of Philosophy.	
263	Jagannath ..	Bhupendrakisor Raybarman.
	Honours School of History.	
267	Salimullah Muslim ..	Abdul Kayum.
	Honours School of Mathematics.	
294	Salimullah Muslim ..	Muhammad Akbar Ali.

B. A. Ordinary Degree.

(In alphabetical order.)

Roll No.	Name of Hall.	Names of candidates.
107	Jagannath ..	Abanimohan Ghosh.
62	Salimullah Muslim ..	Abdul Karim.
14	Ditto ..	Abdul Latif (son of Maulvi Salamot Ullah Patwary).
68	Ditto ..	Abdur Rashid.
69	Ditto ..	Abu Isa Muhammad Mustafa.
15	Ditto ..	Abul Hossain.
33	Ditto ..	Abul Mansur Muhammad Masud Khan.
34	Ditto ..	Abul Quasim Makaremul Basit.
72	Ditto ..	Abu Tahir Muhammad Fazlul Karim.
108	Dacca ..	Adhirchandra Das.
64	External ..	Afazuddin Ahmad.
35	Jagannath ..	Ajitkumar Chanda.
168	Salimullah Muslim ..	A. K. M. Bashirul Islam.
16	Dacca ..	Amarendranath De.
37	Jagannath ..	Amiyabhushan Ray.
7	Dacca ..	Anilkumar Ghosh.
38	Jagannath ..	Bhabanuprasad Datta.
8	Dacca ..	Bhabendranath Das.
110	Ditto ..	Bhupendramohan De.
111	Ditto ..	Bhupendranath Niyogi.
114	Jagannath ..	Bimalkumar Guha.
138	Dacca ..	(Mrs.) Bina Ghosh.
19	Ditto ..	Chittatosh Gangopadhyay.
130	Ditto ..	Dineschandra Pal.
21	Salimullah Muslim ..	Fazlul Karim Khan.
131	Jagannath ..	Ganeschandra Das.
42	Ditto ..	Gopichandra Kar.
155	Ditto ..	Haripada Ray.
116	Ditto ..	Harkumar Sil.
89	Ditto ..	Hemchandra Bandyopadhyay.
43	Ditto ..	Hrishikes Basu.
85	Salimullah Muslim ..	Ibrahim Mian.
45	Dacca ..	(Mrs.) Indira Basu.
22	Ditto ..	Jatischandra Som.
46	Ditto ..	(Miss) Jyotsnamayi Sarkar.
99	Ditto ..	(Miss) Kalyani Chanda.
23	Jagannath ..	Kamakhyaranjan Basu.
140	Dacca ..	(Miss) Kamalrenu Sengupta.
133	Jagannath ..	Kshetramohan Das.
118	Dacca ..	Kumudbandhu Chakrabarti.
90	Ditto ..	(Miss) Mabelle Irenee Augley.
159	Salimullah Muslim ..	Mahbub Alam Chowdhury.
47	Ditto ..	Mahbubur Rahman.
48	Jagannath ..	Mahendralal Daschaudhuri.
49	Ditto ..	Makhanlal Deb.
134	Dacca ..	Manindrachandra Karmakar.
73	Salimullah Muslim	Maniruddin Khan.
24	Jagannath ..	Manomohan Sarkar.
120	Dacca ..	(Miss) Mina Guha.
146	Salimullah Muslim ..	Mir Zafarur Rahman.
160	Ditto ..	Muhammad Anwar Karim.
50	Ditto ..	Muhammad Fazlur Rahman (son of Maulvi Mobarek Ali Sikder).
170	Ditto ..	Muhammad Fazlur Rahman (son of Hazi Adam Sarker).
65	Ditto ..	Muhammad Hafizuddin Bhuiyan.
10	Ditto ..	Muhammad Lutfur Rahman.
52	Ditto ..	Muhammad Muhsin.
78	Ditto ..	Muhammad Sadique.
87	Ditto ..	Muhammad Shamsul Haq.
53	Ditto ..	Muhammad Shamsul Huda.
147	Ditto ..	Muhammad Sirajul Islam.
96	Ditto ..	Mujibur Rahman.
151	Jagannath ..	Nikunjakumar Ray.
67	External ..	Nurul Abedin.
171	Salimullah Muslim ..	Obaidul Kabir.
57	Jagannath ..	Parimalkumar Chanda.
100	Ditto ..	Paritosh Sengupta.
135	Ditto ..	Prithwischandra Guhathakurta.
161	Ditto ..	Priyakumar Basuthakur.
80	Salimullah Muslim ..	Quazi A. B. Md. Habib.
59	Dacca ..	(Miss) Rama Nag.
123	Jagannath ..	Rameswar Pal.
124	Dacca ..	Ranendralal Sen.
163	Jagannath ..	Samarendrakisor Chaudhuri.
28	Dacca ..	Santibhushan Datta.
29	Ditto ..	Santiram Basu.
172	Jagannath ..	Santoshkumar Ray.
167	Salimullah Muslim ..	Siddiqullah.
13	Dacca ..	(Miss) Sobha Dasgupta.
139	Ditto ..	Subodhchandra Mukhopadhyay.
60	Jagannath ..	Sudhendukumar Basu.
126	Ditto ..	Sudhirchandra Bhaumik.
102	Dacca ..	Sudhirkumar Das.
144	Ditto ..	Sukhendrachandra Chakrabarti.
175	Jagannath ..	Sukumar Ray.
4	Dacca ..	Sunilkumar Mukherjee.
129	Jagannath ..	Susilkumar Bandyopadhyay.
5	Dacca ..	Swadeshbhushan Chanda.
82	Salimullah Muslim ..	Syed Muhammad Husain.
84	Ditto ..	Syedur Rahman.
95	Ditto ..	Tafazzal Husain.

The undermentioned candidates must pass the University Test in English Composition before their results can be declared :—

Roll No.	Name of Hall.	Names of candidates.
150	Dacca ..	Akhilchandra Ray.
86	Salimullah Muslim	Khondkar Muhammad Sadequr Rahman.
158	Ditto ..	Md. Ismail Hossain.
174	Ditto ..	Sheikh Muhammad Abdul Majid.

The following candidates having failed in one subject only and having obtained the minimum aggregate required will be allowed to take the examination again by presenting themselves at the next examination only in the subject indicated against their names :—

Roll No.	Name of Hall.	Names of candidates.	Subject.
71	Salimullah Muslim	.. Abu Musa Muhammad Abdul Haq	.. English.
18	Jagannath	.. Bodhisatta Basu	.. English.
154	Ditto	.. Gaurgopal Banik	.. Vernacular Bengali.
157	Salimullah Muslim	.. M. D. Hasan	.. Ditto.
75	Ditto	.. Muhammad Hossain	.. English.
77	Ditto	.. Muhammad Mujibur Rahman	.. Ditto.
295	Jagannath	.. Nalinikanta Saha	.. Economics.
27	Ditto	.. Ramapati Bandyopadhyay	.. English.
12	Ditto	.. Sailendranath Chattopadhyay	.. Economics.
149	Ditto	.. Samarendranath Sengupta	.. Philosophy.
125	Dacca	.. Sudarsan Bhattacharyya	.. English.
137	Ditto	.. Tripurendramohan Sen	.. Mathematics.

Examination in Subsidiary subjects of B. A. Honours Schools, 1936.

The following candidates have passed in the two Subsidiary subjects mentioned against their names :—

(In alphabetical order.)

Roll No.	Name of Hall.	Names of candidates.	Subjects.
		Honours School of English.	
178	Dacca	.. Anilchandra Chaudhuri	.. 1. Economics. 2. Politics.
179	Jagannath	.. Chittaranjan Gupta	.. 1. Economics. 2. Politics.
180	Ditto	.. Hiranyamohan Das	.. 1. Philosophy. 2. History.
182	Salimullah Muslim	.. Md. Abdul Jalil	.. 1. Persian. 2. History.
183	Ditto	.. Mufazzul Husain	.. 1. History. 2. Economics.
184	Ditto	.. Muhammad Abdul Muttalib	.. 1. Arabic. 2. History.
185	Ditto	.. Muhammad Yasin	.. 1. Arabic. 2. Economics.
186	Dacca	.. (Miss) Nani Hor	.. 1. Bengali. 2. Philosophy.
187	Jagannath	.. Santoshkumar Mukhopadhyay	.. 1. Bengali. 2. History.
188	Salimullah Muslim	.. Syed Rafiquddin Ahmad	.. 1. Bengali. 2. Economics.
		Honours School of Sanskrit.	
189	Dacca	.. (Miss) Prabha Sengupta	.. 1. English. 2. Philosophy.
190	Jagannath	.. Suresmohan Bhattacharyya	.. 1. English. 2. Economics.
		Honours School of Islamic Studies.	
191	Salimullah Muslim	.. Abdul Jabbar	.. 1. English. 2. Economics.
193	Ditto	.. Muhammad Abdul Mannan	.. 1. English. 2. Persian.
195	Ditto	.. Muhammad Khawazuddin	.. 1. English. 2. Persian.
197	Ditto	.. Muhammad Nurul Haq	.. 1. English. 2. Persian.
		Honours School of Persian.	
198	Salimullah Muslim	.. Abdul Majid	.. 1. English. 2. Economics.
		Honours School of Philosophy.	
200	Salimullah Muslim	.. Abdul Khaleque Miah	.. 1. English. 2. Economics.
201	Dacca	.. Dineschandra Chakrabarti	.. 1. English. 2. Economics.
202	Ditto	.. (Miss) Maitreyi Datta	.. 1. English. 2. Economics.
203	Ditto	.. Surendramohan Banerjee	.. 1. Bengali. 2. Politics.

Roll No.	Name of Hall.	Names of candidates.	Subjects.
		Honours School of History.	
204	Salimullah Muslim	.. Abdul Awwal Khan	.. 1 Economics. 2. Politics.
205	Ditto	.. Asaduzzaman Khan	.. 1. Economics. 2. Politics.
206	Ditto	.. Ezherul Hoq	.. 1. English. 2. Politics.
207	Ditto	.. Kalimuddin Ahmad	.. 1. English. 2. Persian.
208	Ditto	.. Md. Fazlul Huq	.. 1. Arabic. 2. Politics.
209	Ditto	.. Muhammad Nurul Haq	.. 1. Economics. 2. Politics.
210	Jagannath	.. Santoshchandra Bhattacharyya	.. 1. Sanskrit. 2. Economics.
		Honours School of Economics.	
212	Salimullah Muslim	.. Abul Khair Muhammad Abdul Awwal	.. 1. English. 2. Commerce.
214	Jagannath	.. Amiyakumar Dasgupta	.. 1. English. 2. History.
215	Ditto	.. Anilkumar Datta	.. 1. English. 2. Mathematics.
216	Ditto	.. Bhabaniprasad Sil	.. 1. English 2. Commerce.
217	Dacca	.. Bhabeschandra Barman	.. 1. English. 2. Bengali.
218	Ditto	.. Bibhutibhushan Raychaudhuri	.. 1. English. 2. Sanskrit.
219	Salimullah Muslim	.. Eradul Haq	.. 1. English. 2. Bengali.
220	Jagannath	.. Hiralal Bhattacharyya	.. 1. English. 2. Bengali.
221	Salimullah Muslim	.. Imaduddin Ahmed	.. 1. English. 2. Arabic.
222	Jagannath	.. Kamalbhushan Raychaudhuri	.. 1. English. 2. History.
223	Dacca	.. Kanailal Mukhopadhyay	.. 1. English. 2. History.
224	Ditto	.. Satojendramohan Bandyopadhyay	.. 1. English. 2. Philosophy.
		Honours School of Mathematics.	
225	Salimullah Muslim	.. Ali Ahmed Choudhuri	.. 1. English. 2. Arabic.

The following candidates have passed in only one Subsidiary subject mentioned against their names :--

Roll No.	Name of Hall.	Names of candidates.	Subject.
		Honours School of English.	
181	Salimullah Muslim	.. Khwaja Muhammad Wajeehullah	.. Arabic.
		Honours School of Islamic Studies.	
192	Salimullah Muslim	.. Abul Husain	.. Persian.
194	Ditto	.. Muhammad Abdus Samad	.. Philosophy.
196	Ditto	.. Muhammad Mansurur Rahman	.. Persian.
		Honours School of Persian.	
199	Salimullah Muslim	.. Abdur Rahman	.. English.
		Honours School of Economics.	
211	Salimullah Muslim	.. A. N. Kalimullah	.. English.
213	Ditto	.. Abul Khair Muhammad Hafizuddin Ahmad	English.

B. Sc. Examination, 1936.

The undermentioned candidates have been admitted to the Degree of Bachelor of Science on the results of the Examination held in February and June 1936 :—

Degree with Honours.

(In alphabetical order.)

Roll No.	Name of Hall.	Names of candidates.
	Physics.	
	First Class.	
96	Dacca	.. Santoshkumar Chakrabarti.
97	Ditto	.. Sarojendranath Ghosh.
98	Ditto	.. Sudhindranath Sen.
99	Ditto	.. Sukhamay Gangopadhyay.
	Second Class.	
92	Salimullah Muslim.	Khundkar Sirajuddin.
95	Ditto	.. Raziuddin Ahmad.
	Third Class.	
91	Dacca	.. Gopalchandra Bhattacharyya.
	Chemistry.	
	Second Class.	
101	Dacca	.. Gopeschandra Esh.
103	Ditto	.. Harinath De.
105	Ditto	.. Manindramohan Datta.
110	Ditto	.. Phanibhushan Chakrabarti.
111	Ditto	.. Rabindranath Chattopadhyay.
112	Ditto	.. Sachindrakumar Majumdar.
	Third Class.	
102	Dacca	.. Haridas Bhaumik.
106	Ditto	.. Manmathakumar Haldar.
108	Salimullah Muslim.	Muhammad Abdul Mannaf Bhuiyan.
109	Ditto	.. Muhammed Abdul Karim.

Ordinary Degree with Distinction.

63	Jagannath	.. Sureschandra Pal.

Roll No.	Name of Hall.	Names of candidates.
	Ordinary Degree.	
67	Jagannath	.. Abalakanta Das.
1	Ditto	.. Abanimohan Datta.
5	Dacca	.. Amalchandra Banerjee.
9	Ditto	.. Amarendranath Datta.
12	Jagannath	.. Chittaranjan Datta
13	Ditto	.. Debendranath Mandal.
14	Dacca	.. Debiprasad Mukhopadhyay.
16	Ditto	.. Dhirendrachandra Sarkar.
18	Ditto	.. Goshthabihari Saha.
68	Ditto	.. Jagadischandra Ganguli.
22	Jagannath	.. Jitendrakishor Ray.
24	Ditto	.. Jyotishchandra Basuray.
25	Ditto	.. Kalidas Bhattacharyya.
27	Dacca	.. Kantibhushan Maulik.
28	Jagannath	.. Kedareswar Chattopadhyay.
30	Ditto	.. Munindrachandra Das.
31	Dacca	.. Manomohan Debnath.
32	Ditto	.. Mantoshchandra Dasgupta.
33	Ditto	.. Matilal Ray.
36	Ditto	.. Mohitmohan Dassinha
38	Jagannath	.. Nanigopal Adhikari.
41	Dacca	.. Niludhan Guha.
70	Ditto	.. Nirmalratan Mitra.
71	Ditto	.. Nirodchandra Kar.
44	Ditto	.. Pijushkanti Das
47	Salimullah Muslim.	Qazi Gholam Samdani.
50	Dacca	.. Ranjitkumar Basu.
53	Ditto	.. Sanatkumar Das.
55	Ditto	.. Sankarprasad Dasgupta.
72	Ditto	.. Santoshchandra Barari.
59	Ditto	.. Sudhindranath Dasgupta.
64	Salimullah Muslim.	Suruj Mian.
65	Ditto	.. Syed Muzaher Husain
66	Dacca	.. Tejendranath Bhattasali.

The undermentioned candidates who have failed to qualify for Honours but have obtained the necessary aggregate for a Pass Degree are admitted to the Ordinary Degree of Bachelor of Science :—

Roll No.	Name of Hall.	Names of candidates.
	Honours School of Chemistry.	
107	Salimullah Muslim.	Md. Anwarul Karim.
114	Dacca	.. Sudhirkumar Ray.

The following candidates having failed in one subject only and having obtained the minimum aggregate required will be allowed to take the examination again by presenting themselves at the next examination only in the subject indicated against their names :—

Roll No.	Name of Hall.	Names of candidates.	Subject.
2	Salimullah Muslim	.. Abdul Gani Mea	.. Physics.
4	Dacca	.. Ajitratan Guha	.. Physics.
6	Ditto	.. Amalendukumar Sen	.. Mathematics.
20	Ditto	.. Hariprasad Raychaudhuri	.. Chemistry.
29	Salimullah Muslim	.. Khandaker Nurul Hossain	.. Mathematics.
37	Ditto	.. Muhammad Harisuddin	.. Physics.
48	Jagannath	.. Rabindrakumar Sinha	.. Physics.
49	Salimullah Muslim	.. Rajaq Husain	.. Physics.

Examination in Subsidiary Subjects of B.Sc. Honours Schools, 1936.

The following candidates have passed in their two Subsidiary subjects :—

(In alphabetical order.)

Roll No.	Name of Hall.	Names of candidates.
	Honours School of Physics.	
73	Jagannath	.. Amiyamadhab Ray.
74	Dacca	.. Jatischandra Sengupta.
75	Ditto	.. Lutbihari Mukhopadhyay.
76	Ditto	.. Manatosh Gangopadhyay.
77	Salimullah Muslim.	Shah Md. Fazlor Rahman.

Roll No.	Name of Hall.	Names of candidates.
	Honours School of Chemistry.	
78	Salimullah Muslim.	Amir Hussain.
79	Dacca	.. Bhupalchandra Raysarkar.
80	Ditto	.. Hiranmay Sil.
81	Ditto	.. Jitendramohan Guha.
82	Ditto	.. Niradkumar Datta.
83	Ditto	.. Niradlal Das.
86	Ditto	.. Sudhindranath Pal.
87	Ditto	.. Sudhirkanta Guha.
89	Salimullah Muslim.	Wahidul Islam.
	Honours School of Mathematics.	
90	Dacca	.. Nareschandra Ray.

The following candidates have passed in one Subsidiary subject mentioned against their names :—

Roll No.	Name of Hall.	Names of candidates.	Subject.
Honours School of Chemistry.			
84	Dacca ..	.. Prabodhchandra Mukhopadhyay	.. Mathematics.
85	Jagannath ..	.. Sudhansusekhar Bandyopadhyay	.. Physics.

B.Sc. Honours Examination, 1936.

The undermentioned candidates have been admitted to the Degree of Bachelor of Science with Honours on the results of the examination held in June 1936 :—

Combined Course in Mathematics and Physics.

(In alphabetical order.)

Roll No.	Name of Hall.	Names of candidates.
	First Class.	
117	Jagannath ..	Mukundachandra Chakrabarti.
	Second Class.	
119	Jagannath ..	Pradyotkumar Guhathakurta.
120	Ditto ..	Radharaman Chakrabarti.
121	Dacca ..	Sureschandra Kar.
	Third Class.	
118	Salimullah Muslim.	Nowab Ali Meah.

B.Sc. Honours Part I Examination (combined course in Mathematics and Physics, 1936).

The undermentioned candidate has passed the B.Sc. Honours Part I Examination of the Honours School of Mathematics and Physics on the results of the examination held in June 1936 in the papers noted against his name :—

Roll No.	Name of Hall.	Name of candidate.	Names of papers in which passed.
122	Dacca	.. Anilkumar Pal	.. I, II, III and VI.

Names of Papers.

Paper I.—Algebra and Trigonometry.
Paper II.—Pure Geometry and Vectors.
Paper III.—Analytical Geometry of Curves and Surfaces.
Paper VI.—Heat and Thermodynamics.

B. Com. Examination, 1936.

The undermentioned candidates have been admitted to the Degree of Bachelor of Commerce on the results of the examination held in June 1936 :—

(In alphabetical order.)

Roll No.	Name of Hall.	Names of candidates.
	First Class.	
14	Jagannath ..	Manindrakumar Bhattacharyya.
19	Ditto ..	Paresnath Sen.
25	Dacca ..	Sailendrakumar Ghosh.
	Second Class.	
2	Salimullah Muslim.	Ataur Rahman Khan.
3	Jagannath ..	Bimalchandra Maulik.
5	Dacca ..	Dhirendramohan Sengupta.
6	Ditto ..	Gauranganchandra Baksi.
7	Jagannath ..	Hariballabh Basak.
9	Dacca ..	Jitendrakumar Guha.
11	Ditto ..	Kuladhar Barua.
12	Ditto ..	Makhanlal Bandyopadhyay.
17	Jagannath ..	Niharranjan Chakrabarti.
18	Ditto ..	Paresnath Bandyopadhyay.
20	Dacca ..	Parimalchandra Raychaudhuri.
21	Ditto ..	Phanibhushan Datta.
23	Jagannath ..	Rameschandra Chakrabarti.
27	Dacca ..	Satyakimohan Bhattacharyya.
29	Ditto ..	Susilkumar Pal.

The undermentioned candidates must pass the University Test in English Composition before their results can be declared :—

Roll No.	Name of Hall.	Names of candidates.
1	Jagannath ..	Ajitkumar Das.
8	Ditto ..	Harinarayan Basak.
22	Dacca ..	Rabindrakumar Basu.
26	Jagannath ..	Santigopal Guha.
28	Dacca ..	Sisirkumar Ghosh.
31	Jagannath ..	Tarakchandra Das.

Ordinary Degree of Bachelor of Arts, 1935.

(Supplementary results.)

The undermentioned candidate having passed the University Test Examination in English Composition held on the 24th June 1936, is admitted to the Ordinary Degree of Bachelor of Arts on the results of the Honours Examination in English held in March 1935. The candidate failed to qualify for Honours but obtained the necessary aggregate for an Ordinary Degree :—

Roll No.	Name of Hall.	Name of candidate.
302	Jagannath ..	Arunkisor Dasgupta.

The undermentioned candidates having passed the University Test Examination in English Composition held on the 24th June 1936 are admitted to the Ordinary Degree of Bachelor of Arts on the results of the examination held in February and March 1935 :—

(In alphabetical order.)

Roll No.	Name of Hall.	Names of candidates.
68	Salimullah Muslim ..	Ahsan Uddin Khan.
116	Ditto.	Mazharul Islam Chaudhury.

B. Com. Examination, 1935.

(Supplementary results.)

The undermentioned candidates having passed the University Test Examination in English Composition held on the 24th June 1936 are admitted to the *Degree of Bachelor of Commerce* on the results of the examination held in March 1935 :—

Degree of Bachelor of Commerce, 1935.

(In alphabetical order.)

Roll No.	Name of Hall.	Names of candidates.
	Second Class.	
5	Jagannath	.. Haranchandra Majumdar.
7	Dacca	.. Jogajiban Datta.
22	Jagannath	.. Pradyotkumar Goswami.

B. Com. Examination, 1934.

(Supplementary results.)

The undermentioned candidate having passed the University Test Examination in English Composition held on the 24th June 1936 is admitted to the *Degree of Bachelor of Commerce* on the results of the examination held in March 1934 :—

Degree of Bachelor of Commerce, 1934.

Roll. No.	Name of Hall.	Name of candidate.
	Second Class.	
4	Dacca	.. Brajendrakumar Biswas.

University Test Examination in English Composition.

The following candidates have passed the University Test Examination in English Composition held on the 24th June 1936 :—

(In alphabetical order.)

Roll No.	Name of Hall.	Names of candidates.	Class.
1	Salimullah Muslim	.. A. B. Mufazzal Husain Khandker	.. B.A. 1st Year Honours.
2	Ditto	.. A. F. M. Nurul Huda	.. B.A. 1st Year Pass.
3	Ditto	.. A. K. Md. Siddique	.. B.A. 2nd Year Pass.
4	Ditto	.. A. T. A. Md. Fazlul Fakher	.. B.A. 1st Year Honours.
6	Ditto	.. Abdul Karim	.. B.A. 2nd Year Pass.
7	Ditto	.. Abdul Khaleq Bhuiya	.. B.A. 1st Year Pass.
8	Ditto	.. Abdul Khaliq	.. B.A. 1st Year Pass.
9	Ditto	.. Abdul Majid	.. B.A. 2nd Year Honours.
10	Ditto	.. Abdul Mannan	.. B.A. 1st Year Pass.
11	Ditto	.. Abdur Rahman	.. B.A. 2nd Year Honours.
12	Ditto	.. Abdur Rashid (son of Maulvi Lutfur Rahman).	B.A. 2nd Year Pass.
13	Ditto	.. Abdur Rashid (son of Maulvi Sadat Ali)	.. B.A. 1st Year Honours.
307	Ditto	.. Abdur Rasul Shah Jahan	.. B.A. 1st Year Pass.
14	Dacca	.. (Miss) Abha Datta	.. B.A. 1st Year Honours.
15	Salimullah Muslim	.. Abul Fazail Muhammad Abdul Majed	.. B.A. 1st Year Honours.
16	Ditto	.. Abul Fazl Atwar Husain	.. B.A. 1st Year Honours.
17	Ditto	.. Abul Khair Md. Hafizuddin Ahmad	.. B.A. 2nd Year Honours.
18	Ditto	.. Abul Khair Sazedul Karim	.. B.A. 1st Year Honours.
19	Ditto	.. Abul Wafa Matiur Rahman	.. B.A. 1st Year Pass.
20	Ditto	.. Abu Muhammad Jawadul Haq	.. B.A. 1st Year Pass.
22	Ditto	.. Abu Naim Muhammad Bazlur Rahman	.. B.A. 1st Year Honours.
24	Ditto	.. Abu Shams Muhammad Nurullah	.. B.A. 1st Year Honours.
25	Ditto	.. Abu Tahir Muhammad Abdur Rashid	.. B.A. 1st Year Honours.
26	Ditto	.. Abu Tahir Muhammad Fazlul Karim	.. B.A. 2nd Year Pass.
27	Ditto	.. Abul Hashem Mia	.. B.A. 1st Year Pass.
28	Dacca	.. Adhirchandra Das	.. B.A. 2nd Year Pass.
29	Salimullah Muslim	.. Afsaruddin Ahmad	.. B. Com. 1st Year.
30	Ditto	.. Ahsan Uddin Khan	.. B.A. 2nd Year Pass.
31	Jagannath	.. Ajitkanta Ghosh	.. B.A. 1st Year Pass.
32	Ditto	.. Ajitkumar Chanda	.. B.A. 2nd Year Pass.
35	Salimullah Muslim	.. Akhtaruzzaman Khan	.. B.A. 2nd Year Pass.
36	Ditto	.. Ali Ahmed Choudhuri	.. B.A. 2nd Year Honours.
37	Ditto	.. Ali Akbar	.. B.A. 1st Year Honours.
38	Dacca	.. Amalananda Chakrabarti	.. B.A. 1st Year Pass.
39	Ditto	.. Amal Chandra Ray	.. B.A. 1st Year Pass.
40	Jagannath	.. Amalendu Chakrabarti	.. B.A. 2nd Year Pass.
41	Dacca	.. Amalnath Basu	.. B.A. 1st Year Pass.
42	Ditto	.. Amarendranath Majumdar	.. B. Com. 1st Year.
43	Salimullah Muslim	.. Amijuddin Haldar	.. B.A. 2nd Year Pass.
44	Jagannath	.. Amitabha Som	.. B.A. 1st Year Pass.
45	Dacca	.. Amiyabhushan Basu	.. B. Com. 1st Year.
47	Ditto	.. Amiyakumar Sen	.. B.A. 1st Year Pass.
48	Ditto	.. Anilkumar Das	.. B.A. 1st Year Honours.
49	Ditto	.. Anilkumar Sarkar	.. B.A. 1st Year Pass.
50	Ditto	.. (Miss) Aruna Datta	.. B.A. 2nd Year Pass.
51	Jagannath	.. Arunkisor Dasgupta	.. B.A. 3rd Year Honours.
52	Dacca	.. (Miss) Asalata Sen	.. B.A. 1st Year Pass.
53	Jagannath	.. Asokkumar Majumdar	.. B.A. 1st Year Pass.
55	Ditto	.. Asutosh Pal (son of Babu Dwarakanath Pal).	B.A. 1st Year Honours.
56	Ditto	.. Aswinikumar Sarkar	.. B.A. 1st Year Pass.
57	Dacca	.. (Miss) Bani Gupta	.. B.A. 1st Year Honours.
59	Ditto	.. Bhabaniprasanna Mitra	.. B.A. 1st Year Pass.
60	Ditto	.. Bhabeschandra Barman	.. B.A. 2nd Year Honours.
62	Jagannath	.. Bhupendrakisor Raybarman	.. B.A. 3rd Year Honours.
63	Dacca	.. Bhupendramohan De	.. B.A. 2nd Year Pass.
64	Ditto	.. Bhupeschandra Ghosh	.. B.A. 2nd Year Pass.
65	Jagannath	.. Bidyutkumar Basu	.. B.A. 1st Year Pass.
66	Ditto	.. Bilaschandra Ray	.. B.A. 1st Year Pass.
67	Dacca	.. Bimalacharan Raychaudhuri	.. B.A. 2nd Year Pass.
68	Jagannath	.. Bimalchandra Dattagupta	.. B. Com. 1st Year.
69	Ditto	.. Bimalkumar Guha	.. B.A. 2nd Year Pass.

Roll No.	Name of Hall.	Names of candidates.	Class.
70	Dacca	(Miss) Binapani Ghosh	B.A. 2nd Year Pass.
71	Ditto	(Miss) Binapani Gupta	B.A. 1st Year Pass.
72	Ditto	Binaybhushan Chakrabarti	B.A. 1st Year Pass.
73	Jagannath	Binaykumar Datta	B.A. 2nd Year Pass.
74	Ditto	Binaykumar Ray	B.A. 2nd Year Honours.
75	Ditto	Binaykumar Sengupta	B. Com. 1st Year.
78	Ditto	Birendra Kar	B.A. 1st Year Pass.
79	Ditto	Birendrakisor Chakrabarti	B.A. 1st Year Pass.
80	Dacca	Birendrakumar Bhattacharyya	B.A. 1st Year Pass.
77	Ditto	Birendralal Das	B.A. 2nd Year Pass.
81	Jagannath	Biswaranjan Bhaduri	B.A. 1st Year Honours.
82	Dacca	Brajendrakumar Biswas	B. Com. 2nd Year.
83	Ditto	(Miss) Chuni Sen	B.A. 1st Year Pass.
84	Ditto	Debaprasad Datta	B. Com. 1st Year.
85	Jagannath	Debendraprasad Guharay	B. Com. 2nd Year .
88	Dacca	Denis Roland Daniell	B. Com. 1st Year.
89	Ditto	Dhirendrachandra Bhowal	B.A. 1st Year Pass.
90	Ditto	Dhirendramohan Sengupta	B. Com. 2nd Year.
91	Jagannath	Dhirendranath Palchaudhuri	B.A 2nd Year Pass.
92	Ditto	Dhrubendralal Ray	B.A. 1st Year Honours.
86	Ditto	Digindralal Sen	B.A. 3rd Year Honours.
87	Ditto	Dilipkumar Ray	B.A. 1st Year Honours.
93	Ditto	Dwijendrakumar Basu	B.A. 1st Year Honours.
95	Ditto	Ganeschandra Das	B.A. 2nd Year Pass.
96	Dacca	Gaurangachandra Baksi	B. Com. 2nd Year.
97	Ditto	Gaurgopal Basak	B. Com. 1st Year.
101	Salimullah Muslim	Ghulam Mustafa	B.A. 1st Year Honours.
98	Jagannath	Gopalchandra Das	B.A. 2nd Year Pass.
99	Ditto	Gopalchandra Gupta	B.A. 1st Year Pass.
100	Ditto	Gopikrishna Basak	B.A. 1st Year Pass.
102	Dacca	Gurupada Saha	B.A. 1st Year Pass.
103	Salimullah Muslim	Habibur Rahman	B.A. 1st Year Honours.
104	Jagannath	Haranchandra Majumdar	B. Com. 2nd Year.
105	Ditto	Harendrachandra Pal	B.A. 3rd Year Honours.
106	Ditto	Hariballabh Basak	B. Com. 2nd Year.
108	Ditto	Harinarayan Das	B.A. 1st Year Pass.
109	Ditto	Haripada Ray	B.A. 2nd Year Pass.
110	Dacca	Harisadhan Das	B.A. 1st Year Honours.
111	Jagannath	Harischandra Das	B.A. 1st Year Pass.
112	Ditto	Harkumar Sil	B.A. 2nd Year Pass.
113	Ditto	Hembaran Banerjee	B.A. 1st Year Honours.
114	Ditto	Himansubhushan Bhattacharyya	B.A. 1st Year Honours.
115	Dacca	Himansubikas Das	B.A. 1st Year Pass.
116	Jagannath	Hiranmay Palit	B.A. 1st Year Pass.
117	Salimullah Muslim	Imdadul Haq Dakua	B.A. 1st Year Pass.
119	Jagannath	Jagatbandhu Gop	B.A. 1st Year Pass.
120	Dacca	Jatindramohan Chaudhuri	B.A. 1st Year Pass.
122	Ditto	Jatischandra Som	B.A. 2nd Year Pass.
123	Ditto	Jitendramohan Ray	B.A. 1st Year Pass.
124	Ditto	Jogajiban Datta	B. Com. 2nd Year.
126	Ditto	Jyotirmay Dasgupta	B. Com. 1st Year.
128	Ditto	(Miss) Jyotsnamayee Sarkar	B.A. 2nd Year Pass.
129	Ditto	(Miss) Jyotsna Sen	B.A. 1st Year Pass.
131	Jagannath	Kalidas Chattopadhyay	B.A. 1st Year Honours.
130	Dacca	Kalinarayan Sil	B.A. 2nd Year Pass.
133	Jagannath	Kalipada Gangopadhyay	B.A. 1st Year Honours.
134	Dacca	Kanakkumar Dasgupta	B.A. 1st Year Pass.
135	Ditto	(Miss) Khodeja Khatun	B.A. 1st Year Pass.
136	Salimullah Muslim	Khundkar Lutfar Rahman	B.A. 1st Year Pass.
138	Ditto	Khwaja Zakiuddin	B.A. 1st Year Honours.
139	Jagannath	Krishnaranjan Gupta	B.A. 1st Year Pass.
140	Ditto	Kshetramohan Das	B.A. 2nd Year Pass.
141	Dacca	Kumudbandhu Chakrabarti	B.A. 2nd Year Pass.
142	Salimullah Muslim	M. Waliullah	B.A. 2nd Year Pass.
145	Dacca	Makhanlal Bandyopadhyay	B. Com. 2nd Year.
146	Ditto	Makhanlal Das	B.A. 2nd Year Pass.
149	Jagannath	Manindranath Ghosh	B.A. 3rd Year Honours.
150	Ditto	Manomohan Sarkar	B.A. 2nd Year Pass.
309	Ditto	Monoranjan Mukhopadhyay	B.A. 1st Year Honours.
152	Salimullah Muslim	Matiur Rahman Mian	B.A. 1st Year Pass.
153	Ditto	Mazharul Islam Chaudhury	B.A. 2nd Year Pass
154	Ditto	Md. Abdul Wajid	B.A. 1st Year Honours.
155	Ditto	Md. Abdur Rashid	B.A. 2nd Year Pass.
157	Ditto	Md. Abul Qasim	B.A. 1st Year Honours.
156	Ditto	Md. Abu Taiab	B.A. 1st Year Pass.
163	Ditto	Md. Matlubar Rahman Mandal	B.A. 1st Year Pass.
165	Ditto	Md. Sanawar Hossain	B.A. 1st Year Pass
166	Ditto	Md. Shehabullah	B. Com. 1st Year.
168	Ditto	Mesbahuddin Ahmed	B.A. 1st Year Pass.
169	Ditto	Mir Moazzam Ali	B.A. 1st Year Honours.
170	Ditto	Mirza Ali Maidi	B.A. 1st Year Pass.
171	Jagannath	Mohitmohan Sengupta	B. Com. 1st Year.
173	Salimullah Muslim	Moslemin Khan	B.A. 1st Year Pass.
174	Ditto	Muhammad Abbas Ali Akhanda	B. Com. 1st Year.
178	Ditto	Muhammad Abdul Ghafur	B.A. 1st Year Honours.
179	Ditto	Muhammad Abdul Hamid Sardar	B.A. 1st Year Pass.
180	Ditto	Muhammad Abdul Huq	B.A. 3rd Year Honours.
181	Ditto	Muhammad Abdul Khaliq Mian	B.A. 1st Year Honours.
182	Ditto	Muhammad Abdul Mannan	B.A. 2nd Year Honours.
185	Ditto	Muhammad Abdus Samad (son of Hajee Abdul Latif).	B.A. 1st Year Pass.

Roll No.	Name of Hall.	Names of candidates.	Class.
187	Salimullah Muslim	.. Muhammad Abed Ali Mian	.. B.A. 2nd Year Pass.
188	Ditto	.. Muhammad Abul Faiz Mian	.. B.A. 1st Year Pass.
189	Ditto	.. Muhammad Aminullah	.. B.A. 1st Year Pass.
191	Ditto	.. Muhammad Arif (son of Al-Haj Maulvi Muhammad Sharif Hussain).	B.A. 1st Year Honours.
192	Ditto	.. Muhammad Azizur Rahman	.. B.A. 3rd Year Honours.
193	Ditto	.. Muhammad Bazlul Haq	.. B Com. 1st Year
194	Ditto	.. Muhammad Bazlur Rahman Bhuiyan	.. B.A. 2nd Year Pass.
195	Ditto	.. Muhammad Burhanuddin	.. B.A. 1st Year Pass.
196	Ditto	.. Muhammad Hossain	.. B.A. 2nd Year Pass.
197	Ditto	.. Muhammad Ishaq	.. B.A. 1st Year Honours.
198	Ditto	.. Muhammad Jamshed Husain	.. B.A 1st Year Pass.
199	Ditto	.. Muhammad Mahtabuddin	.. B.A 1st Year Pass.
200	Ditto	.. Muhammad Mansurur Rahman	.. B.A. 2nd Year Honours.
201	Ditto	.. Muhammad Muhsin	.. B.A. 2nd Year Pass.
202	Ditto	.. Muhammad Muhsinul Azam	.. B.A 2nd Year Pass.
203	Ditto	.. Muhammad Mujibar Rahman	.. B.A 1st Year Honours.
204	Ditto	.. Muhammad Mumtazuddin Bhuiyan	.. B.A. 1st Year Pass.
205	Ditto	.. Muhammad Nurul Hai	.. B.A. 1st Year Pass.
206	Ditto	.. Muhammad Sadiq (son of Maulvi Muhammad Arab Ali Bepari).	B.A. 1st Year Honours.
207	Ditto	.. Muhammad Sadiq (son of Maulvi Muhammad Abdul Kader).	B. A. 1st Year Pass.
208	Ditto	.. Muhammad Shahabuddin	.. B.A. 3rd Year Honours.
209	Ditto	.. Muhammad Shamsur Rahman	.. B.A. 1st Year Pass.
210	Ditto	.. Muhammad Sharif	.. B.A. 1st Year Pass.
211	Ditto	.. Muhammad Sirajuddin	.. B.A. 1st Year Honours.
212	Ditto	.. Muhammad Tamizuddin	.. B.A. 2nd Year Pass.
213	Ditto	.. Mujibur Rahman	.. B.A. 2nd Year Pass.
214	Ditto	.. Mukhlesur Rahman	.. B.A. 1st Year Honours.
215	Ditto	.. Musharraf Husain	.. B A. 1st Year Pass.
216	Jagannath	.. Nagendranath Sutradhar	.. B. Com. 2nd Year.
217	Ditto	.. Narayanchandra Chakrabarti	.. B.A 1st Year Honours.
218	Dacca	.. Narendranath Mitra	.. B.A. 2nd Year Pass.
219	Jagannath	.. Nikhilchandra Ghosh	.. B. Com. 1st Year.
220	Dacca	.. Nirmalkanti Basu	.. B.A. 1st Year Pass.
221	Jagannath	.. Nirmalkumar Das	.. B.A. 1st Year Pass.
222	External	.. Nurul Abedin	
224	Dacca	.. Panchanan Goswami	.. B.A. 1st Year Pass.
225	Jagannath	.. Pareschandra Datta	.. B.A. 1st Year Pass.
226	Ditto	.. Parimalchandra Chakrabarti	.. B.A. 1st Year Pass.
227	Ditto	.. Paritoshkumar Mitra	.. B.A. 1st Year Pass.
228	Dacca	.. Phanibhushan Datta	.. B. Com. 2nd Year.
229	Ditto	.. (Miss) Phulu Sen	.. B.A. 1st Year Pass.
232	Jagannath	.. Pradyotkumar Goswami	.. B. Com. 2nd Year.
230	Dacca	.. Praphullakumar Chakrabarti	.. B.A. 1st Year Pass.
231	Ditto	.. Prasantakumar Ray	.. B.A. 1st Year Honours.
234	Salimullah Muslim	.. Qazi Abdul Bari	.. B.A. 1st Year Honours.
235	Ditto	.. Qazi Muhammad Amir Husain	.. B.A. 3rd Year Honours.
236	Ditto	.. Quazi A B. Md. Habib	.. B.A. 2nd Year Pass.
237	Ditto	.. Quazi Rakibuddin Ahamed	.. B.A. 1st Year Pass.
239	Dacca	.. Rabindrakumar Brahmachari	.. B.A. 1st Year Pass.
240	Jagannath	.. Radhaballabh Saha	.. B.A. 1st Year Pass.
241	Ditto	.. Radhagobinda Kar	.. B A. 1st Year Pass.
242	Salimullah Muslim	.. Rafiuddin Ahmad	.. B.A. 1st Year Pass.
243	Dacca	.. Rajendramohan Saha	.. B.A. 1st Year Pass.
244	Jagannath	.. Rakhalchandra Ghosh	.. B. Com. 1st Year.
245	Ditto	.. Ramanath Sengupta	.. B.A. 1st Year Pass.
247	Ditto	.. Rameschandra Ray	.. B.A. 1st Year Pass.
248	Ditto	.. Rampujan Misra	.. B.A. 1st Year Pass.
249	Dacca	.. Ranadhirchandra Guhathakurta	.. B. Com. 1st Year.
251	Jagannath	.. Ranajitkumar Sengupta	.. B.A. 2nd Year Pass.
253	Ditto	.. Rebatimohan De	.. B. Com. 1st Year.
257	Dacca	.. (Miss) Sadhana Sarkar	.. B.A. 1st Year Honours.
262	Ditto	.. Sambhunath Raychaudhuri	.. B.A. 1st Year Pass.
266	Ditto	.. Saradakanta Poddar	.. B.A. 1st Year Pass.
267	Ditto	.. (Miss) Saraju Das	.. B.A. 1st Year Pass.
270	Ditto	.. Satyakimohan Bhattacharyya	.. B. Com. 2nd Year.
271	Ditto	.. Satyendrakisor Kar	.. B.A. 1st Year Honours.
272	Salimullah Muslim	.. Sayed Abul Abrar Ghulam Jilani	.. B.A. 3rd Year Honours.
273	Ditto	.. Serajul Huq	.. B.A. 1st Year Pass.
279	Ditto	.. Shamsul Hoda	.. B.A. 1st Year Honours.
275	Ditto	.. Shaikh Sadar Uddin Munshi	.. B.A. 1st Year Pass.
278	Jagannath	.. Sitaram Banerjee	.. B.A. 1st Year Pass.
282	Dacca	.. (Miss) Smritikana Das	.. B.A. 1st Year Pass.
283	Ditto	.. (Miss) Snehalata Mitra	.. B.A. 1st Year Pass.
281	Ditto	.. (Miss) Sobhana Basu	.. B.A. 1st Year Pass.
284	Jagannath	.. Subimal Bhattacharyya	.. B.A. 1st Year Honours.
285	Ditto	.. Subimalchandra Chakrabarti	.. B.A. 1st Year Pass.
287	Dacca	.. Sudhirchandra Dattaray	.. B.A. 1st Year Pass.
288	Jagannath	.. Sudhirkumar Basu	.. B.A. 1st Year Honours.
290	Dacca	.. Sukhendralal Mukherjee	.. B A. 2nd Year Pass.
291	Jagannath	.. Sukumar Guha	.. B.A. 1st Year Pass.
292	Dacca	.. (Miss) Sunila Guha	.. B.A. 1st Year Honours.
293	Ditto	.. Sunilchandra Ray	.. B.A. 1st Year Honours.
298	Ditto	.. Sureschandra Bandyopadhyay	.. B.A. 1st Year Honours.
297	Jagannath	.. Sureschandra Pal	.. B.A. 1st Year Pass.
299	Ditto	.. Susilchandra Dhar	.. B.A. 1st Year Pass.
300	Salimullah Muslim	.. Syed Fazlur Rahman	.. B.A. 1st Year Honours.
301	Ditto	.. Syed Jamaluddin Ahmed	.. B.A. 1st Year Honours.

N. AHMAD, *Registrar.*

Orders by the Vice-Chancellor and Syndicate of the Calcutta University.

Senate House, Calcutta, the 27th July 1936.

NOTIFICATION No. T. 446.

B. A. Examination, 1938.

The following pieces from the "Vedic Selections," Volume I (University Publication), are prescribed to be read in Sanskrit (Honours Course) for the B.A. Examination in 1938:—

Rigveda.

(1) Hymn No. 1 (i, 1) Agni.
(2) Hymn No. 3 (ii, 12) Indra.
(3) Hymn No. 6 (i, 154) Visnu.
(4) Hymn No. 7 (iii, 61) Usas.
(5) Hymn No. 11 (i, 115) Surya.
(6) Hymn No. 12 (i, 19) Agni and Maruts.
(7) Hymn No. 17 (iii, 59) Mitra.
(8) Hymn No. 20 (ix, 1) Soma (Soma playing the leading part in Rigveda, particularly in Mandal IX).
(9) Hymn No. 26 (x, 90) Purusa.

Atharvaveda.

Hymn No. 5 (xix, 53) Kala (on the eternity and supreme power of time).

Brahmana.

Legend of Sunasepa (Ait. Br. vii, 13-16).

Upanisad.

(1) No. 1 Isa (1-10 verses).
(2) No. 2 Kena—the whole of the piece, the famous episode of Uma Haimavati.
(3) No 3 Katha—(Villi 1, Verses 1-9).

J. CHAKRAVORTI, *Registrar.*

Calcutta University.

Senate House, the 10th July 1936.

NOTIFICATION No. S/293/O. U. P.

Admission of private candidates to the Matriculation Examination.

A

1. Ordinarily private candidates for the Matriculation Examination who are residents of Bengal and Assam and who have not read in any school for one year previous to the date of the examination, should apply to the Divisional Inspector of Schools for permission to appear at the Test Examination to be held by him or under his orders for such candidates.

2. A candidate taking up Hygiene as an additional subject will be required to submit to the Divisional Inspector of Schools along with his application a certificate of training from a Registered Medical Practitioner or from a recognised teacher of Hygiene.

3. In very special cases applications may be addressed by such candidates direct to the University, but these must be submitted to the undersigned along with necessary particulars, as specified below, *not later than the 10th November* of the year preceding that in which they desire admission to the examination and must be accompanied by a statement as to why the Divisional Inspector of Schools concerned was not addressed on the subject.

4. Girl candidates are not required to appear at any Test Examination or to obtain previous permission of the University to appear at the Matriculation Examination as private candidates.

5. If such a student desires to offer Hygiene as one of her subjects for the Matriculation Examination she must submit to the Controller of Examinations along with her application form for admission to the examination, a certificate of training in the subject from a Registered Medical Practitioner or from a recognised teacher of Hygiene.

(*N.B.*—Girl students who have attended any recognised school within one year previous to the examination shall not, except with the special permission of the Syndicate, be treated as private candidates. If this fact is suppressed in any case, the admission of the candidates to the examination will be cancelled.)

6. Teachers of recognised high schools in Bengal and Assam and detenus who intend to appear at the Matriculation Examination as private candidates will not be required to appear at any preliminary Test Examination. They should apply to the undersigned with particulars, as specified below, for permission to appear at the examination on or before the date mentioned above.

N.B.—Particulars to be furnished :—

(1) Each application, addressed to the Registrar, should be submitted through a responsible person together with a certificate of good conduct and documentary evidence regarding age, residence and study and should contain a statement of the subjects proposed to be offered at the examination. A teacher candidate should submit his application through the head of the institution in which he is employed.

(2) A detenu candidate, taking up Hygiene as an additional subject, is to submit to the undersigned along with his application, a certificate of training in the subject from a Registered Medical Practitioner or from a recognised teacher of Hygiene. Teachers of recognised high schools taking up Hygiene will not be required to submit any such certificate.

(3) Detenu candidates should apply to the authorities of their respective Detention Camps for necessary application forms. Other candidates should apply to the undersigned for these forms.

B

(Migration Cases.)

(1) Male candidates, other than teachers of schools recognised by a University or a Board of Secondary Education and detenus, coming from outside the territorial jurisdiction of this University, will not be permitted to appear at the Matriculation Examination, as private candidates.

(2) Exception may, however, be made by the Syndicate in regard to Bengalee and Assamese candidates residing outside Bengal and Assam.

(3) Such a candidate will have to obtain, in the first instance, sanction to his migration, for which purpose he must submit a formal application together with the usual migration fee of Rs. 10 and necessary documents *on or before the 31st August* of the year preceding that in which he desires admission to the examination through the Head Master of the school in which he read last or through an Inspector of Schools of the Province from which he migrates, who will forward his observations along with the application. In the case of a candidate coming from outside India, the application and fee should be submitted through the educational authorities of the district or province from which he migrates.

(*i*) Each application should be supported by a declaration countersigned either by an Inspector of Schools or a Fellow of a University or a Principal of an affiliated college or a gazetted officer to the effect that he has fulfilled the following conditions :—

(*a*) He must not have read in any school (recognised or unrecognised) for one year previous to the Matriculation Examination in which he desires to appear and he has not appeared at any Matriculation or High School Examination conducted outside the territorial jurisdiction of this University.

(*b*) If he has read in a school recognised by any other University or Board he must have previously read in a class which would make him eligible for admission to the Matriculation Examination of that University or Board in the year in which he intends to appear at the Matriculation Examination of this University.

(*ii*) He should also produce a migration certificate from the Divisional Inspector of Schools of the province from which he migrates or a transfer certificate from the school in which he read last, countersigned by the Divisional Inspector of Schools, who will be deemed to be an officer appointed by the University for the purpose.

(4) On his migration being sanctioned, a candidate will be required to pass the preliminary Test Examination to be held by a Government Inspector of Schools in Bengal or Assam or under his orders as specified above. The date, place and other particulars of such Test Examination should be ascertained from the Inspector of Schools concerned.

(*i*) A candidate taking up Hygiene as an additional subject will be required to submit to the Divisional Inspector of Schools, along with his application, a certificate of training in the subject from a Registered Medical Practitioner or from a recognised teacher of Hygiene.

Teachers of high English schools recognised by a University or a Board of Secondary Education and detenu candidates will be exempted from passing any preliminary Test Examination. Such candidates will have to apply for sanction to their migration on or before the date mentioned above together with the usual migration fee of Rs. 10. For this purpose, a teacher candidate should submit his application through the head of the institution in which he is employed and a detenu candidate should submit his application through the Commandant of the Detention Camp concerned.

N.B.—This notification supersedes all other notifications and circulars issued on the subject previously.

J. CHAKRAVORTI, *Registrar.*

Calcutta University.

Senate House, the 28th July 1936.

NOTICE.

The written, oral and practical examinations of the candidates for the Degrees of Doctor of Medicine and Master of Surgery will commence on the following days :—

M. D. Examination—Monday, the 24th August 1936.

M. S. Examination—Monday, the 7th September 1936.

B. B. DUTT,
Controller of Examinations.

Registered No. C207

The Calcutta Gazette

THURSDAY, AUGUST 6, 1936.

PART II

Advertisements.

Notices

Advertisements, Notices, etc., intended for insertion in this part of the Gazette must be sent to Press before 12 noon on Saturday, and all costs deposited and proofs returned by 4 p.m. on Monday. Manuscripts and postal remittances must be addressed to Superintendent, Government Printing (Publication Branch), Bengal Government Press, Alipore.

For the convenience of advertisers located in Calcutta, arrangements have been made to accept advertisements and prepayment of charges at Sales Office, Ground Floor, Writers' Buildings, Calcutta. The latest time for receipt of advertisements for current week's Gazette has been extended till 4 p.m. on Mondays.

PROCLAMATION OF SALE.

Order 21, Rule 66, C. P. Code.

In the Court of the Sub-Judge of Murshidabad.

MORTGAGE EXECUTION CASE No. 91 OF 1936.

Date of sale—15th August 1936, at 12 noon.

Srimati Biraja Kamini Dasi, wife of Babu Adhar Chandra Das, of Brahmantuli, police-station Raghunathganj, decree-holder

versus

On the death of Srimati Kiran Bala Devi, the widow of late Shyama Charan Singha, the next reversionary heir to the estate of her husband and himself Surendra Narayan Singha, son of late Hari Prosad Singha, of Jangipur, Kuhai, police-station Raghunathganj, judgment-debtor.

Schedule of property to be sold.

EIGHT annas share of mauzas Sadekpur, Gotha, Araji Gotha, Madanpur, Ramchandrapur, Bhairabpur, Khanpur, Prasadpur, Kamat Kuhala and Atana Kamat within police-station Suti, sub-registry Nimtita, pargana Joar Birahimpur, together with all appurtenances and forming part of taraf Raghabbati of the Malda Collectorate. The total revenue for the entire tauzi being Rs. 812-5-6 pies and cesses Rs. 384-10, the revenue payable in the half share being Rs. 406-5-9 pies and cesses being Rs. 167-5. The permanent proprietary right will be sold. The value of which may be about Rs. 11,999.

Description of C. S. Khatian No. and J. L. No. of the said mauzas and tauzi No. 597 of the Malda Collectorate.

J. L. No.	Name of mauza.	Khatian No.
92	Sadekpur	.. 3Ka.
48	Prasadpur	.. 1Ka.
47	Bhairabpur	.. 1Ka.
91	Madna	.. 3Ka.
79	Khanpur	.. 22Ka.
89	Gotha	.. 2Ga.
82	Araji Gotha ..	.. 2.

D. N. PAL, Sub-Judge.

Murshidabad, the 27th July 1936. (1561—1)

In the High Court of Judicature at Fort William in Bengal, in Insolvency.

NOTICE OF ADJUDICATION ORDER.

No. 93 of 1936.

Re Shaik Muhammad Ataulla and Shaik Muhammad Said, both residing at No. 11, Colootola Street, in the town of Calcutta, lately carrying on business in co-partnership in medicines and oilman stores at Sadar Bazar, Delhi, under the name and style of K. B. Muhammad Said and Company, at present of no occupation. Ex parte the creditor.

S. K. Kerr, creditor's solicitor.

ON the 21st day of July 1936, an order was made by the High Court of Judicature at Fort William in Bengal in its insolvency jurisdiction adjudging the abovenamed as Insolvents.

Note.—All debts due to the estate should be paid to me.

Dated this 29th day of July 1936.

G. M. FALKNER, Official Assignee.

In the High Court of Judicature at Fort William in Bengal, in Insolvency.

NOTICE OF ADJUDICATION ORDER No. 99 OF 1936.

Re Prokash Chandra Banerjee, residing at No. 5-3-A, Zeriff Lane, in the town of Calcutta, and carrying on business in hardware, under the name, style and firm of B. N. Banerjee & Co., at No. 82, Clive Street, Calcutta, ex parte the debtor.

R. L. Gupta, debtor's solicitor.

ON the 27th day of July 1936 an order was made by the High Court of Judicature at Fort William in Bengal in its insolvency jurisdiction adjudging the abovenamed as an insolvent.

Note.—All debts due to the estate should be paid to me.

Dated this 30th day of July 1936.

G. M. FALKNER, Official Assignee.

In the Court of the Sub-Judge at Asansol.

Section 41 (*1*) of the Provincial Insolvency Act.

INSOLVENCY CASE No. 9 OF 1935.

F. A. T. Layzelle, insolvent.

TAKE notice that the petition for discharge filed by the aforesaid insolvent has been admitted and that the Court has fixed 28thAugust 1936 as the date for the hearing thereof.

K. BANERJI, Sub-Judge.

Asansol, the 28th July 1936. (1567—1)

In the Court of the Sub-Judge at Asansol.

INSOLVENCY CASE No. 2 OF 1936.

NOTICE is hereby given that G. E. Brookes, Guard, East Indian Railway, Asansol, has been adjudged an insolvent on the 19th June 1936, and that he has been directed to apply for his discharge within one year from that date.

K. BANERJI, Sub-Judge.

Asansol, the 11th July 1936. (1568—1)

In the Court of the Sub-Judge at Asansol.

INSOLVENCY CASE No. 5 OF 1936.

NOTICE is hereby given that M. Alphonso, Guard, East Indian Railway, Asansol, has been adjudged an insolvent on the 19th June 1936, and that he has been directed to apply for his discharge within one year from that date.

K. BANERJI, Sub-Judge.

Asansol, the 11th July 1936. (1569—1)

In the Court of the Sub-Judge at Asansol.

Section 19 of the Provincial Insolvency Act.

INSOLVENCY CASE No. 12 OF 1936.

R. A. Lardner of Kulti, petitioner.

TAKE notice that petition for insolvency filed by the aforesaid petitioner has been admitted and that the Court has fixed 21st August 1936 as the date for the hearing thereof.

K. BANERJI, Sub-Judge.

Asansol, the 28th July 1936. (1570—1)

In the Court of the Sub-Judge at Asansol.

Section 19 (*2*) of the Provincial Insolvency Act.

INSOLVENCY CASE No. 21 OF 1936.

NOTICE is hereby given to his creditors that the insolvency petition filed by E. F. deRoze, Driver, East Indian Railway, Asansol, has been admitted and the 14th August 1936 has been fixed for hearing thereof.

K. BANERJI, Sub-Judge.

Asansol, the 11th July 1936. (1571—1)

In the Court of the Sub-Judge at Asansol.

Section 19 (*2*) of the Provincial Insolvency Act.

INSOLVENCY CASE No. 17 OF 1936.

NOTICE is hereby given to his creditors that the insolvency petition filed by Nabakrishna Panja has been admitted and the 14th August 1936 has been fixed for hearing thereof.

K. BANERJI, Sub-Judge.

Asansol, the 28th July 1936. (1572—1)

In the Court of the District Judge at Darjeeling.

INSOLVENCY CASE No. 39 OF 1935.

Kasiram Maheari of Teesta Bazar, district Darjeeling, petitioner.

WHEREAS the abovenamed petitioner was adjudged an insolvent by an order of this Court, dated the 2nd January 1936, the Court has fixed provisionally the 31st August 1936 for hearing of the petition for final discharge at Darjeeling. Any one desiring to oppose the matter may appear in person or by a duly authorised agent before the District Judge at Darjeeling on the date fixed at 10-30 o'clock forenoon.

B. C. SEN, Registrar, *for* District Judge.

Darjeeling, the 29th July 1936. (1583—1)

In the Court of the District Judge of Dacca.

INSOLVENCY CASE No. 9 OF 1936.

Kali Charan Saha, debtor-petitioner.

WHEREAS Kali Charan Saha, son of late Nagarbashi Saha, resident of Golap Roy Dighirpar, police-station Munshiganj, district Dacca, debtor, has applied to this Court for being adjudicated an insolvent, the Court has fixed the 21st of August 1936 next for the hearing of the aforesaid petition, examination of the debtor and the creditors.

W. McC. SHARPE, District Judge.

Dacca, the 30th July 1936. (1588—1)

In the Court of the District Judge of Faridpur.

INSOLVENCY CASE No. 31 OF 1935.

Mafijaddin Mandal, son of late Natu Mandal of Barachar-boninagar, police-station Goalundo, district Faridpur, insolvent.

NOTICE is hereby given that the insolvent of the abovementioned case has been finally discharged by an order of this Court, dated 8th July 1936.

K. B. ROY, District Judge.

Faridpur, the 27th July 1936. (1556—1)

In the Court of the District Judge of Hooghly.

NOTICE is hereby given, under clause (2) of section 12 of the Provincial Insolvency Act, V of 1920, to his creditors that the insolvency petition of Hari Narayan Biswas, son of late Baburam Biswas, of Bhadreswar, thana Bhadreswar, district Hooghly, has been admitted by this Court as No. 63 of 1936, and that the 5th September 1936 has been fixed for the hearing thereof.

S. SEN, District Judge.

Chinsura, the 23rd July 1936. (1564—1)

In the Court of the District Judge of Hooghly.

NOTICE is hereby given, under clause (2) of section 12 of the Provincial Insolvency Act, V of 1920, to his creditors that the discharge petition of Bhajahari Samanta, son of late Ramanand Samanta, of Naldubi, thana Goghat, district Hooghly, has been filed in this Court in Insolvency Case No. 1 of 1936, and that the 29th August 1936 has been fixed for the hearing thereof.

S. SEN, District Judge.

Chinsura, the 27th July 1936. (1565—1)

In the Court of the District Judge of Hooghly.

NOTICE is hereby given, under clause (2) of section 12 of the Provincial Insolvency Act, V of 1920, to his creditors that the insolvency petition of Shambhu Nath Das, son of late Hari Mohan Das, of Serampur, thana Serampur, district Hooghly, has been admitted by this Court as No. 62 of 1936, and that the 5th September 1936 has been fixed for the hearing thereof.

S. SEN, District Judge.

Chinsura, the 28th July 1936. (1566—1)

In the Court of the District Judge of Hooghly.

NOTICE is hereby given, under clause (2) of section 12 of the Provincial Insolvency Act, V of 1920, to his creditors that the discharge petition of Prokash Chandra Saha, son of late Jogindra Nath Saha, of Rajbalhat, thana Jangipara, district Hooghly, has been filed in this Court in Insolvency Case No. 56 of 1935 and that the 12th September 1936 has been fixed for the hearing thereof.

S. SEN, District Judge.

Chinsura, the 29th July 1936.

(1604—1)

In the Court of the District Judge of Hooghly.

NOTICE is hereby given, under clause (2) of section 12 of the Provincial Insolvency Act, V of 1920, to his creditors that the insolvency petition of Sasadhar Kundu, sole proprietor of the firm of Messrs. Surjya Kumar and Sasadhar Kundu, of Selalpur, thana Arambagh, district Hooghly, has been admitted by this Court as No. 61 of 1936 and that the 5th September 1936 has been fixed for the hearing thereof.

S. SEN, District Judge.

Chinsura, the 29th July 1936.

(1605—1)

In the Court of the District Judge of Hooghly.

NOTICE is hereby given, under clause (2) of section 12 of the Provincial Insolvency Act, V of 1920, to his creditors that the insolvency petition of Panchaddi Acchaia, son of Panchaddi Appadu, of Bansberia, Sibpur Jute Mill, thana Serampore, district Hooghly, has been admitted by this Court as No. 64 of 1936 and that the 5th September 1936 has been fixed for the hearing thereof.

S. SEN, District Judge.

Chinsura, the 29th July 1936

(1606—1)

In the Court of the District Judge of Jalpaiguri.

INSOLVENCY CASE No. 4 OF 1936.

KANAIRAM KANU, son of late Joahirram Kanu, of Patharjhora Tea Estate, police-station Malbazar, district Jalpaiguri, has been adjudged insolvent on 17th July 1936, and that he has been directed to apply for final discharge within six months from that date.

S. C. GHOSE, Registrar, *for* District Judge.

Jalpaiguri, the 28th July 1936. (1573—1)

ORDER ANNULLING ADJUDICATION.

Section 43 of the Provincial Insolvency Act, V of 1920.

In the Court of the District Judge at Midnapore.

INSOLVENCY CASE No. 64 OF 1933.

Gangaram Guchait, son of late Bain Guchait, of Baksispur, pargana Bhograi, thana Ramnagar, district Midnapore, petitioner.

WHEREAS the abovenamed petitioner was adjudicated an insolvent by order of the Court, dated 11th day of November 1933, and was directed to apply for discharge by 27th July 1936, and it appears to the Court that the insolvent has not applied for discharge within the time fixed, it is ordered that the order of adjudication, dated the 11th November 1933, against the abovenamed petitioner be and the same is hereby annulled.

Dated this 27th day of July 1936.

S. K. HALDAR, District Judge.

In the Court of the District Judge of Mymensingh.

INSOLVENCY CASE No. 13 OF 1936.

PURSUANT to a petition, dated the 9th day of April 1936, against Dinanath Sil, son of late Radhuram Sil, of village Khalapara, police-station Atpara, district Mymensingh, and on the application of the debtor himself and on reading his application and hearing his pleader, it is ordered that the debtor be and the said debtor is hereby adjudged insolvent.

It is further ordered that the debtor do apply for his final discharge within six months from this date.

Dated this 25th day of July 1936.

S. M. MASIH, District Judge.

(1559—1)

In the Court of the District Judge of Mymensingh.

INSOLVENCY CASE No. 41 OF 1934.

ON the application of the insolvent Kuran Sheikh, son of late Gaher Sheikh, of Swaruppur, police-station Kalihati, district Mymensingh, for an order of the final discharge, the 15th day of August 1936 has been fixed for hearing the aforesaid petition and the examination of the insolvent.

S. M. MASIH, District Judge.

Mymensingh, the 27th July 1936. (1560—1)

In the Court of the District Judge of Noakhali.

INSOLVENCY CASE No. 11 OF 1936.

NOTICE is hereby given that Abzahar Ali, son of late Kameraddin Maji, of Jagatpur, police-station Feni, post-office Daganbhuiya, district Noakhali, having applied to this Court for being adjudged an insolvent, the 15th day of August 1936 has been set down for hearing of the application.

J. N. SEN, *for* District Judge.

Noakhali, the 23rd July 1936. (1553—1)

In the Court of the District Judge of Pabna-Bogra.

INSOLVENCY CASE No. 17 OF 1936.

WHEREAS Dwip Chand Bhanthia, son of late Rupchand Bhanthia, of Bikaneer, at present residing at Serajganj, police-station Serajganj, district Pabna, has applied to this Court, by a petition, dated 21st July 1936, to be declared an insolvent, this is to give notice to all his creditors that the Court has fixed the 29th August 1936 for hearing of the application and for examination of the debtor.

S. N. MODAK, District Judge.

Pabna, the 29th July 1936. (1587—1)

In the Court of the District Judge of 24-Parganas.

INSOLVENCY CASE No 27 OF 1936.

(1) Abdulla and (2) Barkatulla of 22, Nasiruddin Road, Park Circus, Ballygunj, 24-Parganas, applicants.

To Munshi Saflulla of Tinsukhia, post-office Tinsukhia, Lakhipur, Assam, creditor.

ON the 24th day of July 1936 it was ordered that the matter of the petition of the applicants be heard on the 24th day of August 1936, and that the said applicants do attend to be examined by this Court on that date.

T. H. ELLIS, District Judge.

Alipore, the 27th July 1936. (1558—1)

NOTICE TO CREDITORS OF APPLICATION FOR DISCHARGE.

Section 41 (1) of the Provincial Insolvency Act, V of 1920.

In the 4th Court of the Sub-Judge at Alipore.

INSOLVENCY CASE No. 272 OF 1935.

William Samuel Craker of 49, Loco Quarters, Narikeldanga, 24-Parganas, applicant.

TAKE notice that the abovenamed insolvent has applied at the Court for his discharge, and that the Court has fixed the 31st day of August 1936 at 11 o'clock for hearing the application.

Dated this 13th day of July 1936.

S. P. BOSE, Sub-Judge.

(1512—1)

ORDER ANNULLING ADJUDICATION.

Section 43 of the Provincial Insolvency Act, V of 1920.

In the 4th Court of the Sub-Judge at Alipore.

INSOLVENCY APPLICATION No. 480 OF 1935.

Ali Mohammad, applicant.

WHEREAS Ali Mohammad of Titagarh, 24-Parganas, debtor, does neither appear nor apply for discharge within the specified time, it is ordered that the order of adjudication, dated 20th January 1936, against the debtor be and the same is hereby annulled.

Dated this 20th day of July 1936.

S. P. BOSE, Sub-Judge.

ORDER ANNULLING ADJUDICATION.

Section 43 of the Provincial Insolvency Act, V of 1920.

In the 4th Court of the Sub-Judge at Alipore.

INSOLVENCY APPLICATION No. 506 OF 1935.

Dipnarayan Shah, applicant.

WHEREAS Dipnarayan Shah of Lungi Bazar, Budge Budge, 24-Parganas, debtor, does neither appear nor apply for discharge within the specified time, it is ordered that the order of adjudication, dated 27th January 1936, against the debtor be and the same is hereby annulled.

Dated this 27th day of July 1936.

S. P. BOSE, Sub-Judge.

ORDER ANNULLING ADJUDICATION.

Section 43 of the Provincial Insolvency Act, V of 1920,

In the 4th Court of the Sub-Judge at Alipore.

INSOLVENCY APPLICATION No. 513 OF 1935.

Ejahar Shaik, applicant.

WHEREAS Ejahar Shaik of Ramdasati, Motiaburuz, 24-Parganas, debtor, does neither appear nor apply for discharge within the specified time, it is ordered that the order of adjudication, dated 27th January 1936, against the debtor be and the same is hereby annulled.

Dated this 27th day of July 1936.

S. P. BOSE, Sub-Judge.

MR. AJAY KUMAR BASU, B.Sc., B.L., intends to be enrolled as an Advocate of the Calcutta High Court.

(1581—4)

MR. BIRESWAR CHATTERJEE, M.Sc., B.L., desires to be enrolled as an Advocate, High Court.

(1592—4)

MR. SUSIL CHANDRA DAS GUPTA, LL.B., desires to be enrolled as an Advocate, High Court, Calcutta.

(1593—4)

MR. SATYENDRA NATH SEN desires to be enrolled as an Advocate, High Court.

(1594—4)

MR. SAURENDRA MOHAN BASU desires to be enrolled as an Advocate, High Court.

(1595—4)

MR. HEMENDRA NATH LAHIRI, M.A., B.L., intends to be enrolled as an Advocate of the High Court.

(1596—4)

MR. TARUN KUMAR DHAR intends to get enrolled as an Advocate, High Court.

(1597—4)

MR. GURUPADA CHAKRAVARTY, B.L., desires to be enrolled as an Advocate, High Court, Calcutta.

(1598—4)

AMARENDRANATH ROY CHOWDHURY, M.A., B.L., desires to be enrolled as an Advocate, High Court

(1599—4)

MR. POLISETTI MAMILLAIAH, B.A., B.L., desires to be enrolled as an Advocate, High Court.

(1600—4)

MR. CHOWDHURY FAZLUL ALI, M.A., B.L., desires to be enrolled as an Advocate, High Court.

(1601—4)

MR. JNAN KUMAR CHATTERJEE, B.Com. B.L., intends to be enrolled as an Advocate, High Court.

(1602—4)

BHAGAWATI PRASAD KHAITAN, Attorney-at-Law, intends to be enrolled as an Advocate, High Court.

(1603—4)

MR. PROVAT KUMAR SEN GUPTA, M.A., B.L., desires to be enrolled as an Advocate of the High Court.

(1607—4)

MR. MANINDRA KUMAR DEB, B.L., desires to be enrolled as an Advocate of the High Court.

(1608—4)

MR. SUKUMAR GHOSE desires to be enrolled as an Advocate of the High Court, Calcutta.

(1609—4)

MR. PHANINDRA NATH GUPTA, B. L., desires to be enrolled as an Advocate of the High Court.

(1610—4)

MR. PURNENDU KUMAR BATABYAL, M.Sc., B.L., intends to join the High Court as an Advocate.

(1545—4)

Public Service Commission (India).

APPLICATIONS are invited for the post of Electrical Adviser to Government and Electrical Inspector in Sind. (2) A candidate should have (*a*) an Honours Degree in Electrical Engineering of a University in Great Britain, (*b*) two to three years' practical experience in large electrical engineering works of world-wide repute, preferably in Great Britain, (*c*) at least five years' experience in the design and construction of electrical installations including lighting installations, and, if possible, experience of the application of Indian Electricity Rules, 1922, and of the administration of the Indian Electricity Act. He should be a Corporate Member of the Institution of Electrical Engineers (Great Britain). Requirement (*a*) may be relaxed. (3) Pay Rs. 350—20—450—Efficiency Bar—480—30—660—Efficiency Bar—700—40—900. Initial pay not exceeding Rs. 700 per mensem according to qualifications. (4) Age between 35 and 45 years. (5) Post pensionable and permanent. Probation two years. (6) Government servants are eligible to apply if permitted by their departments. (7) Canvassing in any form will disqualify a candidate. (8) Last date for receipt of applications 2nd September 1936. Prescribed application forms and further particulars may be obtained from the Secretary, Public Service Commission, Requests for forms must mention the name of the post.

Simla, the 28th July 1936.

(1582—1)

Public Service Commission (India).

APPLICATIONS are invited for the post of Professor of History, Government College, Lahore. (2) A candidate should be an Honours Graduate in History of a British University, preferably with specialization in Constitutional History. Post-graduate research desirable in addition. Preference to a candidate with athletic qualifications and commissioned service in the Territorial Force. (3) Pay Rs. 300—25—700—efficiency bar—730—30—1,000 with selection grade of Rs. 1,050—50—1,250. (4) Age not below 23 years. (5) Government servants eligible if permitted by their departments. (6) Canvassing in any form will disqualify. (7) Last date for receipt of applications 2nd September 1936. Prescribed application forms and further particulars may be obtained from the Secretary, Public Service Commission, Simla. Applicants for forms must mention the name of the post.

Simla, the 30th July 1936. (1589—1)

WANTED by the Government of Bengal an Inspector of European Schools from 2nd November 1936.

2. Candidates, who should be Europeans or Anglo-Indians, must be British subjects and not below 35 years of age.

3. The candidate selected will be appointed on contract for a period of five years in the first instance, on the following scale of pay :—

(*a*) If he is of Asiatic domicile, initial pay according to age, as shown below, and in the scale of Rs. 650—50/2—1,000 :—

Age.	Initial pay.
	Rs.
35	650
36	650
37	700
38	700
39	750
40 and over ..	750

(*b*) If he is of non-Asiatic domicile—

	Rs.
1st year ..	1,000
2nd year ..	1,000
3rd year ..	1,100
4th year ..	1,100
5th year ..	1,200

4. The person appointed will be entitled to a conveyance allowance of Rs. 25 a month and, if he is of non-Asiatic domicile, to a compensatory (house rent) allowance at the rate admissible under the Calcutta House Allowance Rules.

5. Candidates must possess a first class Master's degree of an Indian University, or a high Honours degree in Arts or Science of a European or American University, and also a degree or diploma in Education. They must also have had adequate teaching experience and possess administrative capacity. Preference will be given to candidates having experience of inspection work.

6. The appointment will be non-pensionable, but the person appointed will be required to join the Contributory Provident Fund, Bengal, and his leave will be regulated according to the rules in force for officers recruited in India.

7. Canvassing in any form will be regarded a disqualification.

8. Applications will be received up to 31st August 1936 by the Assistant Director of Public Instruction, Bengal, Writers' Buildings, Calcutta, from whom further particulars may be obtained.

WANTED a temporary Lecturer in Nyaya for the Government Sanskrit College, Calcutta, on a salary of Rs. 125 per mensem. Candidates with high proficiency in both Navya and Prachin Nyaya, teaching experience in Tol, and having published works in Sanskrit, should apply by the 20th August 1936 to the following address. Canvassing is prohibited.

N. K. DUTT, M.A., Ph.D., Principal,
Sanskrit College, Calcutta (offg.).

Calcutta, the 27th July 1936.

WANTED a trained and experienced woman graduate, whose special subjects should be Geography and either Hand-work or Physical Culture, in the revised scale of Rs. 75—8/2—115—5/2—125 (efficiency bar) 5/2—135—10/2—175.

Applications stating age, qualifications, experience, etc., should reach the Principal, Eden High School for Girls, Dacca, on or before the 18th August 1936.

Imperial Bank of India.

THE following appointments on the Bank's Staff are hereby notified :—

Mr. B. B. Bose, Staff Assistant, to act as Agent, Chittagong Branch, as from the 23rd June 1936, *vice* Mr. D. H. Stanger.

Mr. A. L. W. Fleming to act as Agent, Park Street Branch, Calcutta, as from the 15th July 1936, *vice* Mr. R. D. Worling, M.C.

Mr. Sailaraj Ghosh, Clerk, was in charge of Bhowanipore Out-Station (under Park Street Branch), Calcutta, from the 20th May to the 18th July 1936, inclusive, *vice* Mr. Birendra Krishna Basu.

H. J. FITZ-PATRICK,

Secretary and Treasurer (offg.).

Calcutta, the 24th July 1936. (1554—1)

Custom House Notice.

NOTICE is hereby given that whereas Messrs. J. F. Madan have failed to meet the demand made for duty on 15 packages of plus 4 whisky, *ex* ss. "Clan Mackwhirter" and bonded at 5, Dharamtola Street, under warehousing bill of entry No. 40 of 12th March 1931, the said goods will be sold by auction on the 14th August 1936 at noon in Messrs. Mackenzie Lyall & Co.'s sale room at No. 5, Mission Row, Calcutta, under the provisions of section 119 of the Sea Customs Act.

G. N. BOWER, Collector of Customs.

Custom House, Calcutta, the 28th July 1936.

(1555—2)

NOTICE is hereby given that the partnership business carried on by and between Bhani Bai and Ramniklal Jatashanker under the name and style of. Nattwarlal Chaganlal at No. 40, Strand Road, Calcutta, stands dissolved on and from 6th day of July 1936 and the said Bhani Bai has ceased to have any share or interest in that firm from the date aforesaid and the said Ramniklal Jatashanker since such dissolution has been carrying on the said business as the sole proprietor thereof.

Dated this 27th day of July 1936.

MUKHERJEE & BISWAS,

Attorneys for Ramniklal Jatashanker,

1B, Old Post Office Street, Calcutta.

(1563—1)

NOTICE is hereby given for information of all whom it may concern that Bon Behari Talukder, son of late Purna Sashi Talukder, of Chandpur Puranbazar, has ceased to be a partner of the firms of Messrs. Purna Sashi Talukder, and Messrs. Purna Sashi Talukder and Pran Ballav Kundu, and Messrs. Mano Mohan Talukder and Pran Ballav Kundu, carrying on business at Chandpur Puranbazar, district Tippera, and also in Calcutta, since 1st January 1936. Any person dealing with him (Bon Behari Talukder) shall do so at his own risk and the said firms will not be responsible for his action or liability in any way whatsoever.

MANO MOHAN TALUKDER, PRAN BALLAV KUNDU, GOPAL CHANDRA TALUKDER, PRAFULLA CHANDRA TALUKDER, partners of the firms of Messrs. Purna Sashi Talukder and Messrs. Purna Sashi Talukder and Pran Ballav Kundu and Messrs. Mano Mohan Talukder and Pran Ballav Kundu.

Chandpur Puranbazar, Tippera, the 28th July 1936.

(1577—1)

Ghosh and Ray.

THE public are hereby informed that the partnership carried on by Mr. Sailendra Nath Ghosh and Mr. Karunamay Ray under the name of Ghosh and Ray has been dissolved as from the 1st of March 1936.

DUTT & SEN,

Solicitors for Mr. S. N. Ghosh.

6, Old Post Office Street, Calcutta, the 24th July 1936.

(1584—1)

British International Machine Traders.

THE public are hereby informed that the partnership carried on by Mr. Sailendra Nath Ghosh, Mr. Karunamay Ray and Dr. Sunil Krishna Sircar under the name of British International Machine Traders has been dissolved as from the 16th of April 1936 and the goodwill, assets and liabilities of the said firm have been taken over by Mr. Anil Krishna Sircar of No. 15-1, Issur Mill Lane, Calcutta, as from the said date.

DUTT & SEN,

Solicitors for Mr. S. N. Ghosh.

6, Old Post Office Street, Calcutta, the 24th July 1936.

(1585—1)

Britannia Commercial House.

THE public are hereby informed that the business carried on in partnership by Mr. Sailendra Nath Ghosh and Mr. Dilip Kumar Gupta under the name of Britannia Commercial House has been dissolved as from the 23rd of July 1936.

DUTT & SEN, Solicitors for Mr S. N. Ghosh.

6, Old Post Office Street, Calcutta, the 24th July 1936.

(1586—1)

Notice under section 10A of the Court of Wards Act IX (B.C.) of 1879.

WHEREAS under sections 7, 10 and 35 of the Court of Wards Act, IX (B.C.) of 1879, as amended up to date, the Court of Wards has assumed charge of the property of Raja Gopal Lal Ray Bahadur and his son Bhairab Lal Ray of Tajhat, district Rangpur.

Notice is hereby given under section 10A of the said Act that all creditors having claims against the said estate of Raja Gopal Lal Ray Bahadur and his son Bhairab Lal Ray or their immovable property are hereby required to submit the same in writing to the Collector of Rangpur within six months from the date of publication of this notice.

Creditors are hereby warned that claims not submitted, as required by this notice, are liable to be deemed to have been duly discharged.

H. SEN, Wards Deputy Collector.

Rangpur, the 23rd July 1936. (1557—3)

Estate Louis Vincent Moinet, deceased.

PURSUANT to section 360 of Act XXXIX of 1925 and section 42 of Act XXVIII of 1866, the creditors and all persons interested in the estate of Louis Vincent Moinet, late of 23, Glencairn Crescent, Edinburgh, and care of the National Bank of India, Ltd., 26, Bishopsgate, London, who died at Edinburgh, on the 19th day of November 1935, and Letters of Administration to whose estate were granted by the High Court, Calcutta, on the 9th day of July 1936, are hereby required to submit particulars of their claims to the undersigned on or before the 6th day of September 1936, after which date the Administrator will distribute the assets, having regard to the claims of which notice shall then have been received.

ORR, DIGNAM & CO.,

Solicitors to the Administrator.

32, Dalhousie Square, South, Calcutta, 27th July 1936.

(1552—1)

THE Bengal and Madras Service Family Pension Fund which is provisionally managed and assisted by Government has for its object the provision of monthly pensions for the maintenance of the widows and children of subscribers and is open, with certain exceptions, to all active and pensioned members of the Uncovenanted service of Government (except those serving under the Government of Bombay), and to Local Fund servants earning pensions from Government. Some of the special features of the fund are (1) that widowed daughters incapable of re-marriage or children labouring under such mental or bodily infirmities as incapacitate them from earning their livelihood or preclude the possibility of marriage (in case of a daughter) are admitted to its benefits; and (2) that subscribers to the Widows and Daughters' branches are entitled to a refund of 30 per cent. of the premia paid, should the nominee predecease them after five years of admission. The second quinquennial valuation of the Fund has been completed by the Actuary to the Government of India, and his report discloses very favourable results. For forms of application and rules of the Fund apply to the Accountant-General, Bengal, Imperial Secretariat Buildings, Calcutta.

Notes.

PORTIONS of the following notes of the Calcutta circle of issue are stated to have been destroyed. Payment of their value has been claimed by the person whose name is placed against the numbers. Any other person claiming a right to them is warned to communicate at once with the undersigned :—

Regtd. No.	No. of notes.	Value. Rs.	Name and address of the claimant.
W. D. 11 of 36	S/68,153804 S/78,877252	100 100	Mr. Lajja Ram Gupta, B.A., LL.B., Pleader, Hissar, Punjab.

S. GUPTA, Currency Officer.

Calcutta, the 11th July 1936.

Note.

PORTION of the following note of the Calcutta circle of issue is stated to have been destroyed. Payment of its value has been claimed by the person whose name is placed against the number. Any other person claiming a right to it is warned to communicate at once with the undersigned :—

Regtd. No.	No. of the note.	Value. Rs.	Name and address of the claimant.
W. D. 12 of 36	RE/56,40138	100	Mr. Sita Ram Paswan, c/o Babu Ramcharitra Prasad Sinha, Pleader, Topkhana Bazar, Monghyr.

S. GUPTA, Currency Officer.

Calcutta, the 13th July 1936.

Stolen.

THE Government Promissory Note No. 215228 of the 3½ per cent. loan of 1854-55 for Rs. 1,000, originally standing in the name of Shora Binda Kanoongoy (since deceased), the proprietor by whom it was never endorsed to any other person, having been stolen, notice is hereby given that payment of the above note and the interest thereupon have been stopped at the Public Debt Office, Reserve Bank of India, Calcutta, and that application is about to be made for the issue of duplicate in favour of Mohendra Kumar Kanungoe, Surendra Kumar Kanungoe and Debendra Kumar Kanungoe. The public are cautioned against purchasing or otherwise dealing with the abovementioned security.

Signature of the advertiser—Mohendra Kumar Kanungoe, retired Inspector of Police.

Residence—Ice Factory Road, Chittagong (Bengal). (1540—3)

Lost.

THE Government Promissory Note No. 017433 of 5 per cent. loan of 1945-55 for Rs. 1,000, originally standing in the name of the Imperial Bank of India and last endorsed to the District Magistrate, Tippera, the proprietor, on behalf of the Comilla Victoria College, by whom it was never endorsed to any other person, having been lost, notice is hereby given that payment of the above note and the interest thereupon have been stopped at the Public Debt Office, Reserve Bank of India, Calcutta, and that application is about to be made for the issue of the duplicate in favour of the proprietor. The public are cautioned against purchasing or otherwise dealing with the abovementioned security.

Name of the person notified—S. N. Ray, District Magistrate, Tippera, Comilla.

Comilla, the 22nd July 1936. (1504—3)

Custom House Notice.

NOTICE is hereby given that whereas Messrs. G. C. Shaw & Co. have failed to meet the demand made for duty on 9 packages of Booth's Dry Gin marked G.C.S. Calcutta ex ss. "Malhar" and bonded at the Bengal Bonded Warehouse under warehousing bill of entry No. 101 of 17th June 1933, the said goods will be sold by auction on the 6th August 1936, at noon, in Messrs. Mackenzie Lyall & Co.'s sale room at No. 5, Mission Row, Calcutta, under the provisions of section 119 of the Sea Customs Act.

G. N. BOWER, Collector of Customs.

Custom House, Calcutta, the 21st July 1936. (1490—2)

Lost Receipt.

A RECEIPT numbered 16324, dated the 8th July 1936, and granted by the Reserve Bank of India, Public Debt Office, on submission of the undermentioned Government Promissory Notes. Notice of loss has been given to the Reserve Bank of India, Public Debt Office, and the undersigned is about to apply for surrender of the securities :—

G. P. Note No.	Loan.	Amount. Rs.	Holder's name.
358267/8	1900-01	500 each	Nagendranath Bagchi.
372227/8	1900-01	100 each	

Name of the proprietor—Nagendranath Bagchi.

Residence—35-1, Madan Mitter Lane, Calcutta.

(1551—1)

In the matter of the Indian Companies Act, 1913, and In the matter of the Great India Insurance, Ltd. (in liquidation).

NOTICE is hereby given that at an extraordinary meeting of the shareholders of Great India Insurance, Ltd., held at 14, Clive Street, Calcutta, on 25th July 1936, an extraordinary resolution was unanimously passed for winding up the Company by voluntary liquidation and to appoint Mr. M. L. Mukerjee, B.A., of 91A, Grey Street, Calcutta, as liquidator.

R. K. ROY, Chairman.

14, Clive Street, Calcutta, the 25th July 1936. (1562—1)

In the matter of the Indian Companies Act, 1913,

and

In the matter of the Great India Insurance, Ltd. (In liquidation).

NOTICE is hereby given that a meeting of the creditors of the abovenamed Company will be held on 20th August 1936, at 12-30 p.m., at 95, Clive Street, Calcutta.

M. L. MUKERJEE, Liquidator.

(On behalf of Great India Insurance, Ltd., in liquidation.)

Calcutta, the 28th July 1936. (1574—1)

In the matter of the Indian Companies Acts of 1913-20

Act VII of 1913 and Act IX of 1920, and

In the matter of Barduar Tea and Timber Co., Ltd.

NOTICE is hereby given that the order of the High Court made herein and dated the 29th day of June 1936, confirming the reduction of capital of the abovenamed Company from Rs. 8,00,000 to Rs. 4,80,000 and the minute approved by the Court showing with respect to the capital of the Company as altered the several particulars required by the above statute was registered by the Registrar of Joint Stock Companies, Bengal, on the 29th day of July 1936. The said minute is in the words and figures following :—

"The capital of Barduar Tea and Timber Company, Limited, henceforth is Rs. 4,80,000 divided into 80,000 shares of Rs. 6 each instead of original capital of Rs. 8,00,000 divided into 80,000 shares of Rs. 10 each. At the time of the registration of this minute the sum of Rs. 6 has been paid and is deemed to be paid upon each of the 30,000 issued Ordinary Shares.

Dated the 29th day of July 1936.

ORR, DIGNAM & CO., Solicitors for the Company.

(1575—1)

IN THE HIGH COURT OF JUDICATURE AT FORT WILLIAM IN BENGAL.

Ordinary Original Civil Jurisdiction.

In the matter of the Indian Companies Act, VII of 1913,

and

In the matter of the Bengal Flour Mills Company, Limited.

NOTICE is hereby given that a petition presented to the said Court on the 22nd day of June 1936 for an order confirming the reduction of the capital of the Company from Rs. 12,00,000 to Rs. 7,20,000 is directed to be heard by the said Court on the 17th day of August 1936.

SANDERSONS & MORGANS,

Attorneys for the Company.

26, Dalhousie Square, Calcutta, the 29th July 1936.

(1576—1)

In the matter of the Indian Companies Act, 1913,

and

In the matter of the Banga Sri Insurance Society (In liquidation).

NOTICE is hereby given that a meeting of the creditors of the Banga Sri Insurance Society will be held on the 31st August 1936 at 11-1A, Harrison Road at 3 p.m.

GANGOPROSAD SIRCAR, Liquidator.

11-1A, Harrison Road, Calcutta, the 30th July 1936.

(1578—1)

In the matter of the Indian Companies Act, 1913,

and

In the matter of the Banga Sri Insurance Society (In liquidation).

NOTICE is hereby given that by special resolutions passed and confirmed on 4th and 24th July 1936, respectively, it is resolved to wind up the society voluntarily and Dr. Gangoprosad Sircar is appointed liquidator for such winding up.

SARAT CHANDRA BAL, Chairman.

Gopalgunge, Faridpur, the 30th July 1936. (1579—1)

In the matter of the Indian Companies Act, VII of 1913,

and

In the matter of New Bengal Sugar Works, Ltd. (In liquidation).

NOTICE is hereby given that at an extraordinary general meeting of the shareholders of the abovenamed Company held on the 22nd July 1936 the Company has been voluntarily wound up and Babu Jogada Lal Kundu of 46A, Sitaram Ghose Street, Calcutta, appointed as its liquidator.

M. N. ROY, Chairman.

29, Strand Road, Calcutta, the 29th July 1936.

(1580—1)

IN THE HIGH COURT OF JUDICATURE AT FORT WILLIAM IN BENGAL.

Ordinary Original Civil Jurisdiction.

In the matter of the Indian Companies Act

and

In the matter of Madan Theatres, Ltd.

NOTICE is hereby given that a petition for the winding up of the abovenamed Company by the High Court of Judicature at Fort William in Bengal was on the 14th day of January 1935 presented to the said Court by Messrs. Plummer Brothers & Co., of Nos. 5 and 6, Fancy Lane, a creditor of the Company, and that the said petition is directed to be heard before the Court on the 24th day of August 1936, and any creditor or contributory of the said Company desirous of opposing an order for the winding up of the said Company under the above Act should appear at the time of hearing by himself or his attorney or advocate for that purpose, and a copy of the petition will be furnished to any creditor or contributory of the said Company requiring the same, by the undersigned, on payment of the prescribed charge for the same.

Dated the 31st day of July 1936.

MUKHERJEE & BISWAS, Attorneys for the petitioners, 1B, Old Post Office Street, Calcutta.

Note.—Rule 41 provides that any person who intends to appear on the hearing of the said petition must serve on or send by post to the abovenamed notice in writing of his intention so to do. The notice must state the name and address of the person, or, if a firm, the name and address of the firm, and must be served, or, if posted, must be sent by post in sufficient time to reach the abovenamed not later than two clear days before the 24th day of August 1936.

(1590—1)

In the matter of the Provident Insurance Societies Act and

In the matter of the Tippera Lucky Insurance Society.

NOTICE is hereby given that a general meeting of the abovenamed Society will be held on 25th August 1936, at 4-30 p.m., at its office at Kamalla, Tippera, to consider the liquidator's report and dissolution of the Society.

R. CHOUDHURY, Liquidator.

Comilla, the 17th July 1936. (1498—1)

In the matter of the Indian Companies Act, 1913,

and

In the matter of Melandaha Loan Office, Ltd.

BY an order made by the High Court of Judicature at Fort William in Bengal in the above matter, dated 8th of June 1936, on the petition of Jatindra Chandra Ghosh of Mymensingh, a creditor, it was ordered that the said Company be wound up by the said Court under the provisions of the Indian Companies Act, 1913.

Dated this 31st day of July 1936.

S. N. SEN, Attorney for the said creditor,
9, Old Post Office Street, Calcutta.

(1591 1)

INDIAN LAW REPORTS.

CALCUTTA SERIES of Indian Law Reports from 1876 onwards are available in the Publication Branch, Bengal Government Press, Alipore, Bengal. Enquiries for these may be made to Superintendent, Government Printing, at the above address. Monthly parts from 1930 onwards are available also at the Sales Department, Writers' Buildings, Calcutta -

PRICES.

From 1876 to 1934.

Complete yearly volume Rs. 12 { (postage Re. 1 Inland). (,, Rs. 4 Foreign).

From 1930 onwards.

Monthly parts only Rs. 2 { (postage As. 2 Inland). (,, As. 3 Foreign).

Enquiries for series other than Calcutta must be made to the publishers concerned.

C. R. BATTERSBY,

Supdt., Govt. Printing, Bengal.

Alipore, the 9th December 1934.

Imperial Library.

Secretariat Buildings, 6, Esplanade East, Calcutta.

Open on—

Week days and Saturdays from 10 a.m. to 7 p.m. Sundays and Gazetted holidays from 2 p.m. to 5 p.m.

THE Imperial Library is also a Lending Library. It is free to all except children. There is no subscription to pay.

K. M. ASADULLAH, Librarian.

GOVERNMENT OF BENGAL.

FINANCE DEPARTMENT.

Miscellaneous.

Calcutta, the 20th October 1927.

NOTICE.

IN supersession of the orders issued in notice, dated the 10th June 1922, published in the *Calcutta Gazette*, dated the 14th June 1922, the following revised rates have been fixed for the *Calcutta Gazette* and its parts with effect from the date of this notice. This will not, however, affect the subscriptions already paid at previous rates until they have expired :—

	Net.	With postage.
Per annum—	Rs.	Rs. A.
Entire	31	37 8
Part I	8	10 0
Part IA	2	3 0
Part IB	5	7 0
Part II	5	7 0
Parts III and IV together, or any one of them ..	1	1 8
Parts V and VI together, or any one of them ..	2	3 0
Bengal Library Catalogue ..	2	3 0
Jury Lists	3	4 0
Supplement	7	9 0

	Postage according to weight.
Per issue—	Rs. A.
Entire Gazette (excluding Bengal Library Catalogue and Jury Lists) ..	0 12
Part I	0 4
Part IA	0 2
Part IB	0 4
Part II	0 4
Parts III and IV together, or any one of them	0 2
Parts V and VI together, or any one of them	0 2
Bengal Library Catalogue ..	0 8
Jury Lists	1 0
Supplement	0 4

2. This will not affect the orders relating to specially heavy issues, issued in Notice No. 1874 Mis., dated the 22nd August 1923, published in the *Calcutta Gazette*, dated the 29th August 1923.

J. A. WOODHEAD,

Secretary to the Government of Bengal.

CINCHONA FACTORY PRODUCTS.

By order of the Government of Bengal Cinchona Factory Products as manufactured and packed at the Cinchona Factory, Mungpoo, Darjeeling district, will be sold and distributed by the Superintendent of the **Presidency Jail,** *in original packages* as received from the Mungpoo Factory, at the rates herein noted **from the 1st May 1926 :—**

Name of drug.	Price per lb. in powder form. Taken at a time. For 60 lbs. and upwards.	For 6 lbs. and over but less than 60 lbs.	For any quantity less than 6 lbs.	Price in 5 grain tablets. 1,000 tablets.	500 tablets.	250 tablets.	Price by weight per lb.
	Rs.	Rs.	Rs.	Rs.	Rs. a.	Rs. a.	Rs.
Quinine Bisulphate ..	18	19	20	16	8 0	4 4	..
„ Hydrobromide ..	23	24	25	20	10 0	5 4	..
„ Bihydrobromide ..	26	27	28	23	11 8	6 0	..
„ Salicylate ..	24	25	26	..	..	..	..
„ Tannate ..30 per cent. 35 per cent.	14	15	16	..	..	..	14

N.B.—Packing free in tins, sizes 1 lb., 8 oz. and 4 oz. only. Packing in bottles or smaller sizes of tins extra.

Quinine Sulphate.

For 60 lbs. and upwards at a time .. Rs. 18 per lb.
For 6 lbs. and over but less than 60 lbs. at a time .. .. .. „ 19 „
For any quantity less than 6 lbs. .. „ 20 „

Totaquina.

Irrespective of quantity .. Rs. 13-8 per lb.

For sale to hospitals and dispensaries in Bengal, Bihar, Orissa and Assam.

Quinine Hydrochloride.

For 60 lbs. and upwards at a time .. Rs. 23 per lb.
For 6 lbs. and over but less than 60 lbs. at a time .. .. .. „ 24 „
For any quantity less than 6 lbs. .. „ 25 „

Quinine Di-Hydrochloride.

For 60 lbs. and upwards at a time .. Rs. 25 per lb.
For 6 lbs. and over but less than 60 lbs. at a time .. .. .. „ 26 „
For any quantity less than 6 lbs. .. „ 27 „

Quinidine Sulphate.

For 60 lbs. and upwards at a time .. Rs. 20 per lb.
For 6 lbs. and over but less than 60 lbs. at a time .. .. .. „ 21 „
For any quantity less than 6 lbs. .. „ 22 „

Cinchonidine Sulphate.

For 60 lbs. and upwards at a time .. Rs. 25 per lb.
For 6 lbs. and over but less than 60 lbs. at a time .. .. .. „ 26 „
For any quantity less than 6 lbs. .. „ 27 „

Cinchonine Sulphate.

For 60 lbs. and upwards at a time .. Rs. 12 per lb.
For 6 lbs. and over but less than 60 lbs. at a time .. .. .. „ 13 „
For any quantity less than 6 lbs. .. „ 14 „

*Cinchona Febrifuge (Powder).

For 60 lbs. and upwards at a time .. Rs. 9 per lb.
For 6 lbs. and over but less than 60 lbs. at a time .. .. .. „ 9 „
For any quantity less than 6 lbs. .. „ 10 „

*Cinchona Febrifuge (Tablets).

For 60 lbs. and upwards at a time .. Rs. 10 per lb.
For 6 lbs. and over but less than 60 lbs. at a time .. .. .. „ 10 „
For any quantity less than 6 lbs. .. „ 11 „

Supply of Cinchona Febrifuge to all authorised indentors will be rationed in the proportion of 1½ of Cinchona Febrifuge to 1 of Quinine Sulphate at their existing prescribed prices.

Cinchona Bark (in 50 pound original bags).

Per bag .. .. .. Rs. 25.

4 grains Quinine Tablets.

Rs. a.
2 8 per box of 200 tablets (for Bengal and other provinces).
12 1 per 5 boxes—(Transit charges inclusive) for Public in Bengal.
15 8 per lb.

5 grains Quinine Tablets.

Rs. a.
15 8 per lb. sold in 1 lb., ½ lb. and ¼ lb. tins.

5 grains Quinine Hydrochloride Tablets.

Rs. a.
20 0 per 1,000 tablets.
10 0 „ 500 „
5 4 „ 250 „

Packing free in tins, sizes 1 lb., 8 oz. and 4 oz. only. Packing in bottles or smaller sizes in tins extra.

5 grains Quinine Bihydrochloride Tablets.

Rs. a.
22 0 per 1,000 tablets.
11 0 „ 500 „
6 0 „ 250 „

Packing free in tins, sizes 1 lb., 8 oz. and 4 oz. only. Packing in bottles or smaller sizes in tins extra.

Transit charges extra in every case.

***Cinchona Febrifuge** is for sale to Government and Charitable Institutions, Local Bodies and Missionaries only. **It is not for sale to Private Firms or the General Public.**

Quinine Sulphate is now open for sale to the Public at the above rates. But it will be supplied to Hospitals and Dispensaries in Bengal, Bihar, Orissa and Assam at Rs. 18 per pound irrespective of quantities.

Five and ten boxes of Quinine Tablets are sold to the public at the concession rates which will be intimated on application.

Provinces other than Bengal, Bihar, Orissa and Assam will get their supplies of Sulph. Quinine and Cinchona Febrifuge Powder and Tablets from the Director, Botanical Survey of India, Sibpur, Howrah.

Local sale at the jail gate from 10 to 12 noon.

The system of payment is by—*Cash in advance*—by "*Treasury Challans,*" which should accompany the order or indent.

In cases where this is not possible, payment should be made by "*Remittance Transfer Receipts*" or crossed "*Cheques.*"

Indents unaccompanied by cash in advance will be sent Value Payable Post. Credit sale is not allowed except under special circumstances.

In the case of *Government officers* payments will be recovered by *Book Transfer, i.e., Countersigned Invoices,* in the event of *Cash* not accompanying the indent by "*Treasury Challans,*" *Remittance Transfer Receipt or Cheque.*

2. Price and postage must accompany the price of the drug (when the drug is required by post).

The name of the Railway and Steamer Station or Post Office must be written distinctly when the parcels are required by Rail, Steamer or by Post. Railway parcels are sent by passenger train only.

A scale of postage is given below.

	1 oz.	2 ozs.	4 ozs.	½ lb.	¾ lb.	1 lb.
	As.	As.	As.	As.	As.	Rs. A.
Quinine Sulph. ..	..	..	7	7	11	0 11
Cinchona Feb. ..	..	..	7	7	11	0 11
Cinchona Feb. Tablets	..	..	7	7	11	0 11
Quinine Hydrochlor. ..	5	5	7	7	..	0 11
Quinine Di-hydrochlor.	5	5	7	7	..	0 11
Quinine Tablets ..	..	..	7	7	11	0 11
Totaquina ..	..	..	7	7	11	0 11

	1½ lb.	2 lb.	3 lb.	4 lb.	5 lb.	6 lb.
	Rs. A.	Rs. A.	Rs. A.	Rs. A.	Rs. A.	Rs. A.
Quinine Sulph. ..	0 15	1 3	1 7	1 15	2 7	2 11
Cinchona Feb. ..	0 15	0 15	1 7	1 11	2 3	2 7
Cinchona Feb. Tablets	0 15	1 3	1 11	1 15	2 7	2 15
Quinine Hydrochlor. ..	0 15	1 3	1 7	1 15	2 7	2 11
Quinine Di-hydrochlor.	0 15	0 15	1 7	1 11	2 3	2 7
Quinine Tablets ..	0 15	0 15	1 7	1 11	1 15	2 3
Totaquina ..	0 15	1 3	1 7	1 15	2 7	2 11

Two different drugs are not packed in the same parcel and postage must be paid separately for each kind.

N.B.—Postage stamps are not accepted as revenue.

Government reserve the right to alter the price without notice.

Registered No. C207

No. 32 of 1936

The Calcutta Gazette

THURSDAY, AUGUST 6, 1936.

CONTENTS:

	Page.
Thirtieth Annual Report of the Bengal Smoke Nuisances Commission for the year 1935	1071—1079
Statement showing water-levels of certain rivers in Bengal for the month of May 1936	1080—1081
Area leased for irrigation up to end of June 1936	1082
Weather and Crop Report for the week ending 29th July 1936	1083—1086
Vital Statistics of towns of Bengal for the week ending 25th July 1936 ..	1087
Statements of weekly gauge-readings on certain rivers in Bengal	1088—1089
Statement under the Cotton Ginning and Pressing Factories Act, 1925 ..	1090
Corporation of Calcutta Notice ..	1090

SUPPLEMENT.

Official Papers.

COMMERCE DEPARTMENT.

NOTIFICATION.

No. 5263Com.—29th July 1936.—The Thirtieth Annual Report of the Bengal Smoke Nuisances Commission for the year 1935, is published for general information.

E. N. Blandy,

Secy. to the Govt. of Bengal.

Thirtieth Annual Report of the

Bengal Smoke Nuisances Commission for the year 1935.

At the close of the year under report the Commission was composed as follows:—

(1) A. J. Dash, Esq., I.C.S., Commissioner of the Presidency Division, President.

(2) Rai Suresh Chandra Sinha Bahadur, Magistrate and Collector of Howrah.

(3) Dr. R. B. Khambata, M.R.C.S., L.R.C.P., D.P.H., Director of Public Health, Bengal.

(4) Engineer-Commander J. E. Moloney, R.I.N., Principal Engineer and Ship Surveyor to Government.

(5) J. B. McBride, Esq., A.M.I.Mech.E., Chief Inspector of Factories, Bengal.

(6) G. Y. Robertson, Esq., Manager, Union South Jute Mills, Buddertolla (representing the Bengal Chamber of Commerce).

(7) R. J. Oliver, Esq., A.C.S.M., A.I.M.M. (representing the Bengal Chamber of Commerce).

(8) J. N. Chunder, Esq., Messrs. S. C. Chunder & Co., Calcutta (representing the Bengal National Chamber of Commerce).

(9) Mr. Dhirendra Nath Ghose, B.L. (representing the Corporation of Calcutta).

(10) N. M. Irvine, Esq., B.SC. (Edin.), A.M.I.Mech.E., Chief Mechanical Engineer, Port Commissioners, Calcutta (representing the Commissioners for the Port of Calcutta).

R. Grant, Esq., Chief Inspector and Secretary.

Smoke abatement as others see it.

Immense Mischief.

The more outrageous manifestations of the smoke evil, common in our larger towns 30 or 40 years ago, have been much abated. But the advance made ought not to blind us to the immense mischief still done in subtler and more cautious forms by the smoke nuisance. The Smoke Abatement Society, which meets once again at Bristol to-day, is doing very useful work and deserves the encouragement and support of the suffering public—(*News Chronicle*).

Suicidal.

It is all very well to "keep the home fires burning"—in song it sounds nice and comforting—but if it impairs the health of the people, as it unquestionably does, it is suicidal—(*Rotherham Advertiser*).

"What clean cows."

It is a truism of travel that, however sunlit the day, the approach to any great city takes over its brightness a dark and smoky film. Thousands of homely firesides and hundreds of factory chimneys pour out their murk into the air, and over the town's expanse there hangs a pall. There is no need now for industry to turn a fair land into a blackened wilderness. Coal can be made a better, less grubby, servant of mankind.

There is a good deal of truth, as well as of pathos, in the story of the town child who on his first visit to the country went about crying delightedly: "What clean hills," "What a clean river," "What clean cows"—(*Evening News, London*).

The Inevitability of Gradualness.

Few reforms better exemplify the inevitability of gradualness than that of smoke abatement. Great credit is due to the National Smoke Abatement Society for its efforts to make known the evils of pollution and to develop a strong public opinion on the point. Thanks to those endeavours the menace, not only of industrial, but of domestic smoke is far better understood to-day than it used to be.

Factories may belch their vapours into the blue, but it is the spangles of smoke from innumerable private chimney pots that are mainly responsible for poisoning the urban air. When these are eliminated, and not before, will our cities be fit for an AI population to breathe in—(*Western Daily Press*).

The Supernal Sewer.

If we vaunt ourselves over our ancestors on the score of "enlightenment," it must be in a sense that is abstract, if not Pickwickian. We (of the cities) see through a smoke darkly and breathe an air that they would have abhorred as heartily as their chivalry condemned "villainous saltpetre."

The mischievous effects of smoke have been for a generation familiar to every schoolboy, and every schoolboy as he grew to manhood has had to suffer them with little mitigation. The subject does not appear to reach the cognisance of those who rule us; it would need a diligent search of "Hansard" to find anything about it. Yet it is a "national" question, if ever there was one; it has to be tackled on the broadest lines, if any headway is to be made at all. It makes one wonder how many of the hundreds of thousands of new houses that we are exhorting and organizing into existence will be fresh tributaries of that supernal sewer from which our nostrils have to extract the breath of life"—(*The Observer*).

Volunteers required.

Let us again salute our untiring friends of the National Smoke Abatement Society.

To-day, in saluting Smoke Abatement, we proffer a small suggestion. Persuasion and statistics and talk about atmospheric pollution, sulphuric acid, flue dust and gas, malignant congestion and tar deposits having quite obviously proved useless, why not a band of devoted Smoke

Abaters with blackened faces instead of black shirts—these to walk or stand about at selected points puffing smoke through portable funnels in a startling protest against smoke?

Advertisement pays. Argument rarely convinces. Smoke abatement awaits its heroes and martyrs—(*Daily Mirror*).

Disgusting Evil.

It was an old story, but one that needs reiteration, which was told at the Bristol Conference of the Smoke Abatement Society. The case against our present methods of burning raw coal had already been proved by irrefutable evidence; but the speeches at the conference did succeed in making one or two new points and in keeping the whole disgusting evil before the public eye—(*Manchester Guardian Weekly*).

Sanguine and Determined.

Since the burning of coal in London was prohibited exactly 662 years ago, and since from that day to this no one has paid the edict the smallest notice, the Smoke Abatement Society must be commended as a sanguine and determined body. Instead of denouncing the nuisance in bad language like John Evelyn, who pamphleteered against the "dismal and Hellish cloud of Sea-coal," the Society goes more cunningly to work by telling us of the shocking amount of money which is yearly wasted in smoke—(*The Morning Post*).

Plans for Chimneys, etc.

Under the Act new plants installed or alterations made to the old must be approved by the Commission. During the year the Commission examined and improved 81 plans of which 63 were made in the office of the Commission, covering nearly all types of industrial furnaces. Permission to construct was granted in each case.

Domestic smoke.

The most deadly of the smoke nuisances is the low-lying smoke discharging at ground level from over a quarter of a million domestic fireplaces which for several hours, particularly during the cold weather evenings, shrouds some suburban areas in an irritating and suffocating pall through which it is impossible to see even a few yards ahead. There being no chimneys, domestic smoke is discharged at ground level, when the aerial scavengers wind and rain fail, the poisonous smoke floats stationary near the ground in the vicinity of the spot where it is made. Where the domestic smoke is worst, the mortality from respiratory diseases is highest. The Act does not control domestic smoke. However, the Commission have undertaken to deal with this smoke as far as practicable by means of distributing leaflets containing illustrative instructions to the public and by co-operation rendered by the Ward Health Associations in the city. The alternative remedy is electricity, gas and smokeless fuel.

Complaints.

The Commission controls approximately an area of 80 square miles comprising the local limits of the Calcutta Corporation, Tollygunge Municipality, South Suburban Municipality, Garden Reach Municipality and Howrah Municipality. With the present inadequate staff

it is difficult to keep in touch with all cases of smoke nuisance. The public continue to show much confidence in the Commission and assist in the work by drawing attention to cases of smoke nuisances that Inspectors may not have observed. Eighty-six complaints were made against seventy-six in the last year. Whenever complaints are received immediate enquiries are made and relief given whenever possible. Many of the complaints were made against domestic smoke in respect of which no action can be taken under the Act; but every effort is made by instruction and advice to ameliorate conditions complained of.

Thirty-one statutory warnings were served upon the owners of factories for offensive smoke emission. With each intimations were also sent that, if effective remedial action to reduce emission were not taken, legal proceedings would be instituted.

Prosecutions.

Every care continues to be taken by the Commission before sanctioning a prosecution to see that it is necessary with most successful results.

The following prosecutions were instituted during the year under review:—

(1) Babu S. Bhattacharjee, Manager of Babu Basanta Kumar Roy's Rice Mill at Hon'ble Surendra Nath Roy Road, Shahpore, Calcutta, for emitting smoke in contravention of rule 23(*3*) under section 10 of the Bengal Smoke Nuisances Act III of 1905 -Convicted for the first time and fined Rs. 25 (50 per cent. of the maximum prescribed).

(2) Mr. Weingartner, Manager of the Calcutta Ice Association, 3, Gas Street, Calcutta, for emitting smoke in contravention of rule 23(*3*) under section 10 of the Bengal Smoke Nuisances Act III of 1905—Convicted for the second time and fined Rs. 30 (30 per cent. of the maximum prescribed).

(3) Babu Lall Behari Basack, Manager of Messrs. S. N. Basack & Co.'s Saw Mill at 21/1, Canal East Road, Calcutta, for emitting smoke in contravention of rule 23(*3*) under section 10 of the Bengal Smoke Nuisances Act III of 1905—Convicted for the second time and fined Rs. 10 (40 per cent. of the maximum prescribed).

(4) Mr. S. C. Ghose, Superintendent, Tallah Pumping Station of the Calcutta Municipal Corporation, for emitting smoke in contravention of rule 23(*3*) under section 10 of the Bengal Smoke Nuisances Act III of 1905 -Convicted for the fourth time and fined Rs. 125 (62 per cent. of the maximum prescribed).

(5) Babu Keron Chandra Mitter, Manager of the Kanai Lall Daga's Rice Mill at Carrapooker Road, Italghatta, Calcutta, for emitting smoke in contravention of rule 23(*3*) under section 10 of the Bengal Smoke Nuisances Act III of 1905—Convicted for the first time and fined Rs. 25 (50 per cent. of the maximum prescribed).

(6) Mr. L. M. Moore, Manager of the Shivajee Glass Works, Howrah, for emitting smoke in contravention of rule 23(*3*) under section 10 of the Bengal Smoke Nuisances Act III of 1905 and also for wrongful construction and use in contravention of section 8A of the said Act- Convicted for the second time and fined Rs. 40 (40 per cent. of the maximum prescribed).

(7) Babu Panna Lal Das, owner of the Sree Govinda Rice Mill at 6, Burrashibtolla Road, Shahpore, Calcutta, for emitting smoke in contravention of rule 23(*3*) under section 10 of the Bengal Smoke Nuisances Act III of 1905—Convicted for the first time and fined Rs. 25 (50 per cent. of the maximum prescribed).

(8) Babu L. M. Sarma, Manager of the Rameswar Tobacco Company, at 91-96, Grand Trunk Road, Howrah, for lower altitude in contravention of rule 23(*3*) under section 10 of the Bengal Smoke Nuisances Act III of 1905, and also for wrongful construction and use in contravention of section 8A(*2*) of the said Act—Convicted under section 8A for the first time and fined Rs. 100 (100 per cent. of the maximum prescribed).

(9) Mr. S. C. Ghose, Superintendent of the Tallah Pumping Station of the Calcutta Municipal Corporation, for emitting smoke in contravention of rule 23(*3*) under section 10 of the Bengal Smoke Nuisances Act III of 1905—Convicted for the fifth time and fined Rs. 150 (75 per cent. of the maximum prescribed).

(10) Babu Hari Pada Roy, Manager of Messrs. P. C. Sen & Bros.'s Rice Mill at 39, Alipore Road, Calcutta, for emitting smoke in contravention of rule 23(*3*) under section 10 of the Bengal Smoke Nuisances Act III of 1905—Convicted for the first time and fined Rs. 10 (20 per cent. of the maximum prescribed).

(11) Babu Radha Kissen Bhorilall, owner of the Rice Mill at 1/2, Chetla Road, Tollygunge, for emitting smoke in contravention of rule 23(*3*) under section 10 of the Bengal Smoke Nuisances Act III of 1905—Convicted for the first time and fined Rs. 10 (20 per cent. of the maximum prescribed).

(12) Babu Surendra Nath Shah, Manager of Messrs. Ramdeo Benarasi Lall's Rice Mill, at 2, Govindo Addy Road, Calcutta, for emitting smoke in contravention of rule 23(*3*) under section 10 of the Bengal Smoke Nuisances Act III of 1905—Convicted for the first time and fined Rs. 10 (50 per cent. of the maximum prescribed).

In the last three cases, the fines inflicted are less than the inspection fees which would have been payable. The infliction of such inadequate sentences not only makes a breach of the Act profitable, but also tends to encourage certain owners, to commit such a breach.

Publicity.

The Commission was again represented at the Calcutta Health Welfare Week. Exhibits showed the evil effects of smoke nuisance and air pollution on the local respiratory mortality, the poisoning of food supplies and the effects on trees, buildings and distant localities. The Calcutta Electric Supply Corporation and the Oriental Gas Company greatly assisted this section in displaying smokeless gas and electrical appliances for cooking and other domestic purposes, as a permanent solution of the evils of smoke. The public showed great interest in this section.

Permanent remedies.

Electricity, gas, gas coke, oil and smokeless fuels (low temperature carbonisation).

In factories (apart from the 100 rice mills using the waste product, husk) much raw coal is used. The annual reduction shown in Appendix I indicates that it is possible to reduce smoke emission to a negligible amount, and in many cases it will prove economical to use a smokeless medium in place of raw coal.

The smoke abatement campaign has been materially assisted by the activities of the Calcutta Electric Supply Corporation who have during the past year further increased the number of their consumers, particularly amongst industrial works.

The number of domestic consumers of electricity has increased by 5,427 whilst an additional 499 heating and cooking circuits have been connected to the company's mains.

The total power of new electric motors connected during the past year in industrial works amounts to no less than 20,000 horse-power, and the greater proportion of this vast increase is represented by the conversion of existing steam engines to electric drives with a resultant closing down of boilers in existence for many years. This results in a corresponding diminution of free smoke emitted in the Calcutta area

The Oriental Gas Company state that during the year ending 30th June 1935 there was distinct evidence of a turn towards the use of gas for industrial purposes in various ways

At the same time, many new residential buildings were fitted with complete installations for cooking and water heating purposes, whilst for the latter purpose the gas geyser demand had continued to be a marked feature of house and flat seekers. Property owners when renovating their premises frequently install modern gas appliances.

During the year the number of appliances showed an increase of 700 for cooking, water-heating, steam raising and for a large variety of industrial purposes.

General control by the Commission.

During the year under review the Commission held 11 meetings out of which one was special. The Commission also kept in touch with various smoke departments, fuel, engineering and research institutes of Europe and America.

The average emission of smoke from each factory chimney was the equivalent of ·07 minutes of dense black smoke per hour. In 1906 when the work of the Commission commenced it stood at 13·1 minutes per hour.

Detecting offensive chimneys.

Smoke observations of big factories were generally made by the Inspectors from the Central Smoke Observatory which is fitted with a telephone so that owners may be informed on the telephone at the actual time of smoke emission. Observations of locomotives, steamers, launches and minor industries are made locally.

In 1926 the Commission recommended to Government that Smoke Observers should be appointed to relieve the Inspectors for the duty of inspection, etc., of engineering plants. Administrative approval was obtained in 1927 to this recommendation, but financial stringency has prevented this scheme being carried into effect.

During the year action was taken as under:—

Nuisances reported for:—

Departmental action—1484 offences.

Telephone warnings—963 offences.

Inspections and tests—4,820.

Statutory warnings—31.

Prosecutions—12.

The maximum fine imposed for offences under the Act was Rs. 150 and the minimum Rs. 10.

It is recognised that the smoke from locomotives, road rollers and steamships is particularly offensive, because of low altitude at which it escapes, but improvement in this is being experienced largely due to assistance of owners, who punish careless attendants departmentally on reports from the Inspectors of offences observed. This procedure has been so successful that no prosecutions were necessary regarding such furnaces, though excessive smoke from 236 locomotives, 1 road roller and 241 steam-launches and steamships had to be reported during the year.

Conclusion.

The Commission records its grateful thanks to smoke departments, fuel and engineering research institutions and the technical and local press for assistance freely rendered. Thanks are also due to local owners, managers and engineers, whose co-operation and valuable assistance have greatly helped the Commission and to the technical staff for their energy and loyalty in carrying out the policy of the Commission.

R. GRANT,
Chief Inspector and Secretary.

H GRAHAM,
President.

Calcutta, the 8th April 1936.

APPENDIX I.

Table showing the average of the observed emission of smoke of scales 6, 5 and 4 in terms of scales 6 up to the present time.

Year.	Minutes per hour.
1906 April (when work was commenced) ..	13·1
1907 March	3·5
1908 ,, ...	2·5
1909 ,, ...	2·04
1910 ,, ...	1·94
1911 ,, ...	1 84
1912 ,, ...	1·84
1913 ,, ...	1·82
1914 ,, ...	1·74
1915 ,, ...	1·66
1916 ,, ...	1·40
1917 ,, ...	1·31
1918 ,, ...	1·29
1919 ,, ...	1·27
1920 ,, ...	1·23
1920 December	1·22
1921 ,, ...	1·60
1922 ,, ...	1·68
1923 ,, ...	1·49
1924 ,, ...	1·39
1925 ,, ...	1·19
1926 ,, ...	·98
1927 ,, ...	·68
1928 (average for the year)	·48
1929 ,, ,, ...	·3
1930 ,, ,, .. .	·18
1931 ,, ,, . ..	·08
1932 ,, ,, ..	·08
1933 ,, ,, ...	08
1934 ,, ,, ...	·07
1935 ,, ,, .. .	07

IRRIGATION DEPARTMENT

Statement showing heights above P. W. D. datum and low water in the rivers Ganges, Bhagirathi, Jalangi and Brahmaputra for the

Date.	River Ganges.											
	Mirzapur. Zero of gauge is 200·00 ft. above P. W. D. datum.		Benares. Zero of gauge is 197·05 ft. above P. W. D. datum.		Buxar.* Zero of gauge is 169·91 ft. above Bengal P. W. D. datum.		Dinapore. Zero of gauge is 135·51 ft. above P. W. D. datum.		Monghyr. Zero of gauge is at P. W. D. datum.		(A) Rajmahal. Zero of gauge is −5·98 ft.	
	Distance in miles.	From Allahabad, 86.	From Allahabad, 134.	From Mirzapur, 48.	From Benares, 90.		From Benares, 177.	From Buxar, 87.	From Benares, 287.	From Dinapore, 110.	From Benares, 407.	From Monghyr, 120.
	Highest gauge reading.	2nd September 1916. 265·97 ft.	2nd September 1916. 244·55 ft.		7th September 1919. 203·40 ft.		21st August 1923. 172·41 ft.		8th September 1901. 129·60 ft.		15th August 1913. 90·37 ft.	
	Lowest gauge reading.	11th April 1878. 198·92 ft.	20th May 1879. 191·70 ft.		15th May 1914. 161·65 ft.		26th April 1902. 136·11 ft.		2nd May 1914. 95·75 ft.		30th April 1936. 54·97 ft.	
		Height above zero of gauge.	Height above P. W. D. datum.	Height above zero of gauge.	Height above P. W. D. datum.	Height above zero of gauge.	Height above P. W. D. datum.	Height above zero of gauge.	Height above P. W. D. datum.	Height above zero of gauge.	Height above P. W. D. datum.	Height above zero of gauge.	Height above P. W. D. datum.
1	2	3	4	5	6	7	8	9	10	11	12	13	14
1st ..	..	10·67	210·67	Below zero 2·50	194·55	1·08	170·99	8·80	144·31	97·80	97·80	60·95	54·97
2nd ..	..	10·67	210·67	2·50	194·55	1·08	170·99	8·80	144·31	97·80	97·80	61·00	55·02
3rd ..	..	10·58	210·58	2·50	194·55	1·08	170·99	8·80	144·31	97·70	97·70	61·00	55·02
4th ..	..	10·58	210·58	2·50	194·55	1·00	170·91	8·80	144·31	97·70	97·70	61·00	55·02
5th ..	..	10·50	210·50	2·50	194·55	1·00	170·91	8·80	144·31	97·70	97·70	61·00	55·02
6th ..	..	10·50	210·50	2·58	194·47	1·00	170·91	8·80	144·31	97·60	97·60	61·10	55·12
7th ..	..	10·42	210·42	2·58	194·47	1·00	170·91	8·80	144·31	97·60	97·60	61·25	55·27
8th ..	..	10·42	210·42	2·58	194·47	0·92	170·83	8·80	144·31	97·60	97·60	61·40	55·42
9th ..	..	10·33	210·33	2·67	194·38	0·92	170·83	8·80	144·31	97·60	97·60	61·50	55·52
10th ..	..	10·25	210·25	2·67	194·38	0·83	170·74	8·80	144·31	97·50	97·50	61·60	55·62
11th ..	..	10·25	210·25	2·67	194·38	0·83	170·74	8·80	144·31	97·50	97·50	61·65	55·67
12th ..	..	10·25	210·25	2·75	194·30	0·83	170·74	8·80	144·31	97·70	97·70	61·95	55·97
13th ..	..	10·17	210·17	2·75	194·30	0·83	170·74	8·80	144·31	97·90	97·90	62·05	56·07
14th ..	..	10·17	210·17	2·75	194·30	0·75	170·66	8·80	144·31	98·00	98·00	62·10	56·12
15th ..	..	10·17	210·17	2·83	194·22	0·75	170·66	8·80	144·31	98·20	98·20	62·10	56·12
16th ..	..	10·17	210·17	2·83	194·22	0·75	170·66	8·80	144·31	98·50	98·50	62·10	56·12
17th ..	..	10·17	210·17	2·83	194·22	0·67	170·58	8·80	144·31	98·70	98·70	62·10	56·12
18th ..	..	10·17	210·17	2·92	194·13	0·67	170·58	8·80	144·31	99·20	99·20	62·20	56·22
19th ..	..	10·12	210·12	2·92	194·13	0·67	170·58	8·80	144·31	99·70	99·70	62·30	56·32
20th ..	..	10·12	210·12	3·00	194·05	0·58	170·49	8·80	144·31	100·30	100·30	62·50	56·52
21st ..	..	10·12	210·12	3·00	194·05	0·58	170·49	8·80	144·31	100·80	100·80	62·80	56·82
22nd ..	..	10·12	210·12	3·00	194·05	0·58	170·49	8·80	144·31	101·20	101·20	63·00	57·02
23rd ..	..	10·08	210·08	3·00	194·05	0·58	170·49	8·80	144·31	101·70	101·70	63·10	57·12
24th ..	..	10·21	210·21	3·00	194·05	0·58	170·49	8·80	144·31	101·80	101·80	63·10	57·12
25th ..	..	10·29	210·29	2·92	194·13	0·58	170·49	8·80	144·31	101·90	101·90	63·20	57·22
26th ..	..	10·42	210·42	2·75	194·30	0·58	170·49	8·80	144·31	101·90	101·90	63·80	57·82
27th ..	..	10·62	210·62	2·67	194·38	0·58	170·49	8·80	144·31	102·00	102·00	64·70	58·72
												Value of zero = −2·00 ft.	
28th ..	..	10·83	210·83	2·67	194·38	0·58	170·49	8·80	144·31	102·10	102·10	60·60	58·60
29th ..	..	11·00	211·00	2·58	194·47	0·58	170·49	8·90	144·41	102·20	102·20	60·75	58·75
30th ..	..	11·33	211·33	2·50	194·55	0·58	170·49	9·30	144·81	102·40	102·40	61·00	59·00
31st ..	..	11·42	211·42	2·50	194·55	0·75	170·66	9·50	145·01	102·60	102·60	61·40	59·40
Average level	..	10·42	210·42	2·72 Below zero	194·33	0·77	170·68	8·84	144·35	99·45	99·45	*Vide* footnote below.	

Note.—Since the 1st January 1929 the datum of all gauges has been finally altered to refer to the Bengal Public Works Department datum which is 6·25 feet above recorded since each gauge was established have been prepared.

*The Zero of the Buxar gauge has been checked from the G. T. S. Bench marks Nos. 125 and 126 on line 70K and found to be 169·91 feet above the Bengal

†On and from 1st January 1931, High water level and Low water level readings are shown at Swarupganj).

(A) The value of zero of gauge at the station was −5·98 ft. from 1st to 27th May 1936, and −2·00 ft. from 28th to 31st May 1936. Hence, the average height abov

The 28th July 1936.

BENGAL.

month of May 1936 and the highest reading of each gauge above P. W. D. datum as well as the lowest gauge reading since 1876.

				River Bhagirathi.		River Jalangi.				River Brahmaputra.	
Rampur-Boalia. Zero of gauge is 32·25 ft. above P. W. D. datum.		Goalundo. Zero of gauge is 1·409 ft. above Bengal P. W. D. datum.		Berhampore. Zero of guage is at P. W. D. datum.		Swarupganj.† Zero of gauge is at P. W. D. datum.				Gauhati. Zero of gauge is 136·958 ft. above P. W. D. datum.	
From Benares, 471.	From Rajmahal, 64.	From Benares, 591.	From Rampur-Boalia, 120.								
26th August 1879. 64·24 ft.		16th August 1931. 29·60 ft.		14th August 1890. 03·46 ft.		25th September 1900. 35·30 ft.				24th August 1906. 169·25 ft.	
24th April 1931. 32·05 ft.		8th February 1914. 2·41 ft.		20th May 1884. 32·00 ft.		7th May 1896. 2·11 ft.				14th and 15th February 1936. 129·058 ft.	
Height above zero of gauge.	Height above P. W. D. datum.	Height above zero of gauge.	Height above P. W. D. datum.	Height above zero of gauge.	Height above P. W. D. datum.	Height above zero of gauge.		Height above P. W. D. datum.		Height above zero of gauge.	Height above P. W. D. datum.
						H. W. L.	L. W. L.	H. W. L.	L. W. L.		
15	16	17	18	19	20	21	22	23	24	25	26
1·70	33·95	10·50	11·909	33·95	33·95	4·46	3·72	4·46	3·72	4·60	141·558
1·65	33·90	11·00	12·409	33·90	33·90	4·73	3·82	4·73	3·82	4·50	141·458
1·70	33·95	11·50	12·909	34·00	34·00	4·74	3·89	4·74	3·89	3·90	140·858
1·70	33·95	11·90	13·309	34·00	34·00	4·63	3·80	4·63	3·80	3·40	140·358
1·70	33·95	12·10	13·509	34·00	34·00	4·77	3·87	4·77	3·87	4·80	141·758
1·75	34·00	12·30	13·709	34·00	34·00	5·11	4·10	5·11	4·10	5·80	142·758
1·80	34·05	12·40	13·809	34·00	34·00	5·56	4·40	5·56	4·40	5·10	142·058
1·90	34·15	12·60	14·009	34·00	34·00	5·62	4·34	5·62	4·34	4·50	141·458
2·00	34·25	12·60	14·009	33·95	33·95	5·32	4·24	5·32	4·24	4·10	141·058
2·10	34·35	12·70	14·109	33·95	33·95	5·58	4·50	5·58	4·50	4·80	141·758
2·25	34·50	12·70	14·109	33·95	33·95	5·24	4·32	5·24	4·32	5·75	142·708
2·40	34·65	12·70	14·109	33·95	33·95	4·98	4·16	4·98	4·16	6·30	143·258
2·50	34·75	12·70	14·109	33·95	33·95	4·56	3·93	4·56	3·93	7·50	144·458
2·65	34·90	12·70	14·109	33·95	33·95	4·08	3·66	4·08	3·66	7·20	144·158
2·80	35·05	12·70	14·109	33·95	33·95	3·98	3·56	3·98	3·56	5·90	142·858
2·85	35·10	13·00	14·409	33·95	33·95	4·12	3·54	4·12	3·54	5·00	141·958
2·85	35·10	13·10	14·509	33·95	33·95	4·14	3·56	4·14	3·56	4·90	141·858
2·90	35·15	13·20	14·609	34·00	34·00	4·37	3·72	4·37	3·72	4·50	141·458
2·90	35·15	13·30	14·709	34·00	34·00	4·92	4·00	4·92	4·00	4·65	141·608
3·00	35·25	13·20	14·609	34·00	34·00	5·02	4·10	5·02	4·10	4·70	141·658
3·15	35·40	13·10	14·509	34·00	34·00	5·41	4·36	5·41	4·36	4·40	141·358
3·35	35·60	13·00	14·409	34·00	34·00	5·74	4·54	5·74	4·54	4·40	141·358
3·55	35·80	13·00	14·409	34·00	34·00	5·79	4·69	5·79	4·69	4·80	141·758
3·70	35·95	13·20	14·609	34·00	34·00	5·92	4·96	5·92	4·96	5·20	142·158
3·75	36·00	13·20	14·609	34·00	34·00	5·78	4·95	5·78	4·95	6·00	142·958
3·80	36·05	13·20	14·609	34·00	34·00	5·47	4·69	5·47	4·69	7·00	143·958
3·85	36·10	13·70	15·109	34·10	34·10	5·20	4·50	5·20	4·50	8·10	145·058
5·40	37·65	14·30	15·709	34·20	34·20	5·41	4·72	5·41	4·72	8·80	145·758
5·50	37·75	14·50	15·909	34·20	34·20	5·32	4·40	5·32	4·40	10·00	146·958
5·60	37·85	14·20	15·609	34·15	34·15	5·09	4·38	5·09	4·38	11·20	148·158
5·90	38·15	14·40	15·809	34·20	34·20	4·95	4·42	4·95	4·42	11·60	148·558
2·99	35·24	12·86	14·269	34·01	34·01	5·03	4·19	5·03	4·19	5·92	142·878

the Kidderpore Old Dock Sill. The values of the highest and lowest readings have similarly been altered. Printed notes on the correction to be applied to all reduced levels P. W. D. datum.

zero of gauge at the station is twice shown thus :—from 1st to 27th May 1936—62·09 ft. and from 28th to 31st May 1936—60·94 ft.

J. F. RUSSELL, *Personal Assistant to the Chief Engineer to the Government of Bengal, Irrigation Department.*

IRRIGATION DEPARTMENT, BENGAL.

Irrigation operations for the official year 1936-37.

Area leased for irrigation up to end of June 1936.

Circle.	District.	Canal.	Estimated full discharge.	Average discharge in month.	Discharge utilised.	Approximate area of land irrigated during the year up to the end of the month.	Approximate area of land under irrigation up to the same date last year.	Details of areas leased.							Rainfall, 1936-37.		Rainfall, 1935-36.	
								Long-term leases.	Season leases.					Grand Total.	During month.	Up to end of month.	During month.	Up to end of month.
									Kharif.	Rabi.	Sugarcane.	Single watering.	Total.					
			Cusecs	Cusecs	Cusecs	Acres.	Acres.	Acres.	Acres.	Acres.	Acres.	Acres.	Acres.	Acres.	Inches.	Inches.	Inches.	Inches.
South-Western.	Midnapore ..	Midnapore	1,411	70	57	225	..	4,166	26,543	..	..	..	26,543	30,709	16·39	25·24	10·59	11·64
		Panskura	522	1	..	..	..	1,371	3,855	..	..	..	3,855	5,226	14·72	27·60	9·07	13·37
	Howrah ..	Tidal Reaches, Ranges I and II	..	..	..	..	..	..	..	..	..	..	..	..	23·29	41·08	8·32	13·65
		Total Midnapore Canal ..	..	..	..	225	..	5,537	30,398	..	..	..	30 398	35,935	..	..	..	..
		Total of the corresponding period last year ..	..	..	..	..	..	5,425	395	..	..	..	395	5,820	..	..	..	..
	Burdwan and Hooghly.	Damodar Canal proper ..	1,600	866	800	23,502	..	19,001	18,693*	..	..	..	18,693	37,694	5·79	14·88	6·36	10·37
		Eden Canal proper ..	400	30	30	75	11	6,152	248(a)	..	..	..	248	6,400	11·08	22·06	8·77	13·12
		Total Damodar Canal ..	..	..	..	23,577	11	25,153	18,941	..	..	..	18,941	44,094	..	..	..	..
		Total of the corresponding period last year ..	..	..	..	..	..	31,066	3(b)	..	..	..	3	31,069	..	..	..	..
	Birbhum ..	Bakreswar Canal ..	129	8	8	14	25	..	691	..	..	..	691	691	7·98	12·06	6·01	7·04
		Total of the corresponding period last year ..	..	.	..	..	..	..	..	..	..	..	..	..	..	..	..	..
		GRAND TOTAL ..	..	..	..	23,816	36	30,690	50,030	..	..	..	50,030	80,720	..	..	..	..
		GRAND TOTAL OF THE CORRESPONDING PERIOD LAST YEAR ..	..	..	..	..	..	36,491	398	..	..	..	398	36,889	..	..	..	..

*Area irrigated under the Bengal Development Act XVI of 1935. (a) Including 75 for hot weather. (b) For hot weather.

	Approximate area of land irrigated during the year up to the end of the month.
	Acres.
Salbund Canal	178

J. F. RUSSELL,
Personal Assistant to the Chief Engineer to the Government of Bengal.

Calcutta, the 30th July, 1936

DISTRICT REPORTS ON WEATHER AND CROPS.

For the week ending on the 29th July 1936.

Summary.—During the week the rainfall was generally moderate to heavy. It has facilitated the cultivation of winter paddy. Reaping of autumn crops is in progress. Prospects of standing crops are generally satisfactory. During the week ending Saturday, the 25th July, the number of persons receiving gratuitous relief was 4,563 in the distressed areas of Murshidabad. In 24-Parganas and Birbhum, 71 and 315 persons, respectively, were employed on test relief works on Saturday, the 25th July. In Nadia and Burdwan 2,696 and 2,250 persons received gratuitous relief. Test relief works have been closed in Burdwan and Hooghly. The average price of common rice for the province has risen by about 0·51 per cent. as compared with that of the previous week.

Serial No.	District and sub-division.	Rainfall.	Price of common rice, in seers, per rupee.		Character of the weather, condition of crops, etc.
			This week.	Previous week.	
1	2	3	4	5	6
		Inches.			
1	24-Parganas ..	3·53	9¾	9 15/16	Weather seasonable. Fodder and water are sufficient. No import or export. Cattle-disease is reported from Amdanga and Sandeshkhali police stations. 71 persons were engaged on test relief works on the last day of the week ending the 25th July. Agricultural loans also gratuitous relief were distributed during the week in Sadar, Basirhat and Diamond Harbour. Condition of jute plants satisfactory in Barrackpore but not satisfactory in Baraset and Basirhat. Some damage caused by insects. Height varies from 3½ to 5 feet. Harvesting not yet commenced. Steeping water ample in Basirhat.
	Diamond Harbour..	3·16	9½	10	
	Barrackpore ..	0·95	8½	8½	
	Baraset ..	0·80	9	9	
	Basirhat ..	2·59	11	11	
2	Nadia ..	3·32	8⅞	8⅞	Weather seasonable. Agricultural operation is going on in full swing. Fodder and water are sufficient. Distribution of agricultural loan is being made in all subdivisions except Kushtia. Gratuitous relief was given to 5 persons in Sadar, 2,667 persons in Chuadanga and to 24 persons in Meherpur for the week ending 25th July 1936. Condition of jute plants not so healthy. Steeping water ample. Height of plants varies from 2 to 4 cubits. No damage. River level 1 foot higher. Rainfall sufficient. Harvesting not yet commenced.
	Kushtia ..	(n)	(n)	10	
	Meherpur ..	5·60	11	11	
	Chuadanga ..	4·51	12	12	
	Ranaghat ..	3·38	9½	9½	
3	Murshidabad ..	6·24	9¾	10	Weather seasonable. Prospects of standing crops are favourable. Fodder and water are sufficient. Cattle-disease is reported from Lalbagh subdivision. No large import or export. Number of persons receiving gratuitous relief in the distressed areas for the week ending Saturday, the 25th July, was 265, 3,031 and 1,267 in Lalbagh, Kandi and Jangipur subdivisions, respectively. Condition of jute plants healthy and growth satisfactory. No damage. Steeping water ample. Height of plants 4 to 6 feet. River level 1 foot higher. Rainfall sufficient. Harvesting not yet commenced.
	Lalbagh ..	7·53	10½	10½	
	Jangipur ..	4·22	10½	10½	
	Kandi ..	3·56	9½	9½	
4	Jessore ..	4·33	11	11	Weather seasonable. Prospects of standing crops are fair. No large export or import. Fodder and water are sufficient. Condition of jute plants fair and growth satisfactory. No damage. Steeping water sufficient. Height of plants varies from 3 to 3½ cubits. River level 2 inches higher than last year. Rainfall moderate. Harvesting not yet begun.
	Jhenidah ..	4·02	13	13	
	Magura ..	4·30	13	13	
	Narail ..	3·77	12	10	
	Bongaon ..	4·68	10	10	
5	Khulna ..	2·61	10	10	Weather seasonable. Fodder and water are sufficient. Test relief works suspended. Condition of jute plants healthy. No damage. Steeping water ample. Height of plants varies from 5 to 9 feet. River level higher. Harvesting not commenced.
	Satkhira ..	3·12	10½	10½	
	Bagerhat ..	5·15	8½	8½	

(n) Not reported.

Serial No.	District and sub-division.	Rainfall.	Price of common rice, in seers, per rupee.		Character of the weather, condition of crops, etc.
			This week.	Previous week.	
1	2	3	4	5	6
		Inches.			
6	Burdwan ..	4·82	9½	9½	Weather seasonable. Condition of crop is favourable. Fodder is sufficient. Cattle-disease is reported from Ausgram police-station. Test relief works closed on 23rd July 1936. 2,250 persons received gratuitous relief during the week ending 25th July 1936. Condition of jute plants healthy. No damage. Steeping water sufficient. Height of plants nearly 3 to 4 cubits. River level lower.
	Asansol ..	6·42	11	11	
	Katwa ..	2·35	9	9	
	Kalna ..	1·79	8¾	8¾	
7	Birbhum ..	6·16	10	10	Weather seasonable and sultry. Prospects of standing crops are fair. Transplantation of winter paddy continues. Water is sufficient but there is scarcity of fodder. 315 persons were employed on test relief works on preceding Saturday.
	Rampurhat ..	8·55	10½	10½	
8	Bankura .	2·94	10	10	Weather cloudy. Transplantation of paddy seedlings is in progress. Prospects of standing crops are good. Fodder and water are sufficient. Cattle-disease is reported from Raipur and Bankura thanas. Relief works have been suspended.
	Vishnupur .	2·34	9¾	9	
9	Midnapore ..	3·75	10	10	Transplantation of winter paddy continues. Condition of jute plants is satisfactory. Fodder and water are sufficient.
	Contai ..	2·95	9	8	
	Tamluk ..	2·58	9	9	
	Ghatal ..	(a)	10¾	10¾	
	Jhargram ..	2·76	9	9	
10	Hooghly ..	2·92	9½	9½	Weather seasonable. Fodder and water are sufficient. Test relief works have been closed on the 18th July 1936. Condition of jute plants healthy. About 4-anna damages caused by insects in Serampore. 2-anna damages in Arambagh. Steeping water ample. Height about 4 feet. Harvesting not yet commenced. River level higher than last year.
	Serampore ..	2·10	10	9½	
	Arambagh ..	4·30	9½	9½	
11	Howrah ..	2·79	10	10	The sky cloudy. Transplantation of winter paddy continues. Fodder and water are sufficient. Condition of jute plants healthy. No damage. Height 4 feet on average. Rainfall moderate.
	Uluberia ..	1·87	9½	9½	
12	Rajshahi (Rampur-Boalia).	5·90	9¾	9¾	Weather seasonable. Condition of standing crops appears to be fair. Fodder and water are sufficient. Cattle-disease exists in places. Condition of jute plants healthy. No damage. Steeping water available. Height 5 to 6 feet. River level normal. About 2-anna crops harvested.
	Naogaon ..	4·55	10½	10½	
	Nator ..	5·49	9¾	9¾	
13	Dinajpur ..	9·47	11	11	Weather seasonable. Cattle-disease is rsported from Birganj thana. Condition of jute plants healthy and growth satisfactory. No damage. Steeping water not ample. Height of plants 6 to 7 feet. River level lower than last year. Harvesting continues.
	Thakurgaon ..	7·69	11	11	
	Balurghat ..	6·06	11½	11½	
14	Jalpaiguri ..	5·26	10	10	Transplantation of winter paddy and harvesting of *bhadoi* paddy are in progress. Fodder and water are sufficient. Condition of jute plants healthy. No damage. Steeping water sufficient. Height of plants 8 feet on average Harvesting not yet commenced. Rainfall moderate.
..	Alipur ..	9·39	10	10	

(a) Not reported.

Serial No.	District and sub-division.	Rainfall.	Price of common rice, in seers, per rupee.		Character of the weather, condition of crops, etc.
			This week.	Previous week.	
1	2	3	4	5	6
		Inches.			
15	Darjeeling ..	9·85	8	8	Weather favourable. Transplantation of paddy and *murua* is in progress. Fodder and water are sufficient.
	Kurseong ..	6·41	8	8	
	Siliguri ..	4·50	10	10	
	Kalimpong ..	3·94	6½	7	
16	Rangpur ..	15·62	11	11½	Weather seasonable. Prospects of standing crops are fair. Transplantation of *aman* paddy continues in outlying subdivisions but retarded in Sadar for excessive rain. No large export or import. Fodder and water are sufficient. Condition of jute plants healthy. No damage. Steeping water ample. Height of plants 6½ feet. Rainfall excessive in Sadar. About 2-anna crops harvested.
	Nilphamari ..	8·88	10½	11	
	Kurigram ..	12·96	10	10	
	Gaibandha ..	11·33	9	9	
17	Bogra ..	5·13	10½	10½	Cultivation of winter paddy continues. Prospects of standing crops are fair. *Aus* paddy and jute are being harvested. Fodder and water are sufficient. Condition of jute plants healthy. No damage. Steeping water not sufficient Height 6 to 9 feet. River level lower than last year. About 4-anna crops harvested.
18	Pabna ..	5·81	10	10	Weather seasonable. Condition of standing crops is satisfactory. Flood water is rising. Harvesting of *aus* paddy and jute is in progress. Fodder and water are sufficient. Condition of jute crop healthy and growth satisfactory. No damage. Steeping water sufficient. Height of plants 6 to 7 feet. Harvesting 4 annas at Serajganj and 5 annas at Sadar.
	Serajganj ..	3·85	11½	11½	
19	Malda ..	5·08	10½	10½	Weather cloudy. Transplantation of winter rice continues. Fodder and water available. Cattle-disease is reported from Garoh and Habibpur police-stations. Condition of jute is healthy. No damage. Steeping water ample. Height about 7½ feet. River level 1 foot lower. Harvesting not commenced.
20	Cooch Behar ..	9·04	12½	12½	Weather seasonable. Preparation of lands for winter paddy, rearing of seedlings in nursery and transplantation of the same continue. Prospects of standing crops are fair. Harvesting of autumn paddy and cutting, steeping and washing of jute continue. Fodder and water are sufficient. Cattle-disease is reported from Sadar, Tufanganj and Dinhata subdivisions. Condition of jute plants satisfactory. No damage. Steeping water ample. Height of plants about 7 to 8 feet. About 1½-anna crops harvested.
21	Dacca ..	2·02	10½	10½	Rainfall at North Sadar (Kapasia) 1·20. Weather seasonable and its effects on the agricultural operations are fair. Jute plants are generally healthy and their growth is satisfactory. Damage to the extent of 2 annas and about 1 anna by the sudden rise of water in the Munshiganj and Sadar subdivisions, respectively. Steeping water ample. Height of plants 4 to 7 feet generally. Rainfall not excessive. About 5½-anna crops harvested. River level lower. Fodder and water are sufficient. Cattle-disease exists in every subdivision except Munshiganj.
	Manikganj ..	0·36	10	10½	
	Narayanganj ..	2·74	12	12	
	Munshiganj ..	4·15	10½	(*n*)	

(*n*) Not reported.

Serial No.	District and sub-division.	Rainfall.	Price of common rice, in seers, per rupee.		Character of the weather, condition of crops, etc.
			This week.	Previous week.	
1	2	3	4	5	6
		Inches.			
22	Mymensingh ..	4·44	10	10	Weather rainy and cloudy. Condition of crops is fair. Fodder and water are available. Condition of jute plants not so satisfactory except Jamalpur and Tangail. No damage. Steeping water ample. Height 4 to 5 cubits. River level lower than last year by 3 feet. Rainfall normal. About 4-anna crops harvested.
	Jamalpur ..	5·19	10½	10½	
	Tangail ..	2·84	11	11	
	Netrakona ..	6·21	12	12	
	Kishorganj ..	4·63	10½	10½	
23	Faridpur ..	3·70	11½	11½	Weather seasonable. Condition of standing crops is fair. Fodder and water are sufficient. Condition of jute plants fair. No damage. Steeping water ample in low lying tracts. Height about 6½ feet. River level lower. About 1½-anna crops harvested.
	Goalundo (Rajbari)	2·77	10½	10½	
	Madaripur ..	1·51	10½	11	
	Gopalganj (*a*) ..	0·76	12½	12½	
24	Bakarganj (Barisal)	5·42	10½	10½	Weather seasonable. Prospects of standing crops are not bad in Sadar, fair in Pirojpur and Patuakhali and good in Bhola. Fodder and water are sufficient. Cattle-disease is reported from Pirojpur subdivision. Condition of jute plants not healthy in low land and fair in high land. No damage. Steeping water sufficient. Height about 2 to 7½ feet. River level higher. About 4-anna crops harvested.
	Pirojpur ..	4·86	9½	9½	
	Patuakhali ..	4·39	10½	10½	
	Dakshin Shabazpur (Bhola).	4·37	10	10	
25	Chittagong ..	5·37	10 12*	10 11*	Weather seasonable. Transplantation of *aman* and harvesting of *aus* crops continue. Damage to paddy plants by insect pests reported from Cox's Bazar. Fodder and water are sufficient. Cattle-disease is reported from places. Panga salt sells at 14 seers at Sadar and 12 seers at Cox's Bazar.
	Cox's Bazar ..	7·92	11	11	
26	Tippera (Comilla) ..	12·12	10	10	Weather fair. Condition of jute plants healthy. Damage about 2 annas reported from Brahmanbaria. Steeping water ample. Height about 7 feet. River level lower than last year. Rainfall excessive. About 4-anna crops harvested.
	Brahmanbaria ..	3·99	10½	10½	
	Chandpur ..	6·45	11½	11½	
27	Noakhali ..	7·81	10½	10½	Heavy rainfall has affected the standing crops in Feni subdivision. Cattle-disease (Anthrax) prevails in Begamganj and Senbagh police-stations in Sadar. Fodder and water sufficient. Condition of jute plants healthy. A little damage due to excessive rain. Steeping water ample. Height 6 to 8 feet. River level a little lower than last year. About 3-anna crops harvested.
	Feni ..	14·17	10½	10½	
28	Chittagong Hill Tracts.	4·35	11	11	Weather seasonable. Its effects are favourable. Cattle-disease subsided at Mong circle but still prevails in Chakma and Bohmong circles.
29	Tripura State ..	7·31	10½	(*n*)	Weather rainy. Fodder and water are sufficient. Cattle-disease exists in Belonia and Sabroom Divisions. Cotton sells at Rs. 9 to Rs. 12 and jute at Rs. 2-8 to Rs. 5-8 per maund. Condition of jute plants healthy. No damage. Steeping water ample. Height about 5 to 9 feet. Harvesting not yet commenced.

(*a*) The rainfall at Haridaspur, which is very near to Gopalganj, is shown here.

* Burma rice.

(*n*) Not reported.

S. ABDULLAH, for *Director of Agriculture, Bengal.*

Dacca, the 3rd August 1936.

Vital statistics of towns with a population of 50,000 and over of the Bengal Presidency for the week ending Saturday, the 25th July 1936.

District.	Nos.	Towns.	Population under registration according to census of 1931.			Births registered.		Deaths registered.																							
			Male.	Female.	Total.	Number registered (excluding still-births).	Still-births registered.	Cholera.	Small-pox.	Plague.	Cerebro-spinal meningitis.	Malaria.	Enteric fever.	Measles.	Relapsing fever. (Spirochætal).	Kala-azar.	Influenza.	Other fevers.	Dysentery.	Diarrhœa.	Pneumonia.	Pulmonary Tuberculosis.	Other respiratory diseases.	Injuries including suicide.	Deaths from child-birth.	Other causes.	Total of all causes.			Total of corresponding week of the previous year.		
																											Male.	Female.	Total.	Male.	Female.	Total.
Calcutta ..	1	Calcutta ..	778,817	362,045	1,140,862	443	62	8	4	..	10	12	26	4	..	2	8	22	45	9	79	77	45	18	2	260	355	267	622	302	286	588
Burdwan ..	2	Asansol Mining Settlement.	209,544	173,136	382,680	213	3	4	1	..	..	..	2	..	..	..	..	35	4	1	12	2	6	10	1	48	57	69	120	88	80	168
Howrah ..	3	Howrah ..	145,120	79,753	224,873	123	7	1	1	..	..	2	6	2	..	1	..	..	12	12	13	13	18	2	..	59	71	71	142	59	53	112
Dacca ..	4	Dacca ..	79,365	59,153	138,518	62	5	..	..	..	..	1	..	..	..	2	..	2	5	1	6	2	7	2	1	28	33	24	57	29	28	57
24-Parganas	5	Bhatpara ..	60,134	24,841	84,975	52	2	..	1	..	..	1	1	2	..	..	2	13	1	10	1	..	3	..	1	16	28	24	52	17	18	35
	6	Garden Reach.	36,131	19,741	55,872	10	..	1	..	..	..	2	..	..	..	..	..	4	..	..	1	..	..	1	..	6	12	3	15	5	7	12
Chittagong ..	7	Chittagong.	35,049	18,107	53,156	31	..	1	..	..	..	1	..	..	..	..	..	4	1	..	..	..	..	..	..	11	6	12	18	6	5	11

A. C. CHATTERJI, M.B., D.P.H., MAJOR, I.M.S., *Director of Public Health, Bengal.*

Calcutta, the 31st July 1936.

Statement of weekly gauge readings on the river Ganges at Rampur Boalia for the week ending the 25th July 1936.

Date.	Hour.	Height of surface above P. W. D. datum.	Height of surface above P. W. D. datum on the same date last year.	Remarks.
1936.				Value of B. M. on Rajshahi College step; = 64·73 P. W. D. Zero of gauge = 0·00 P. W. D.
19th July	7 a.m.	56·75	49·75	
20th „	7 „	56·90	50·30	
21st „	7 „	56·90	50·95	
22nd „	7 „	57·35	51·35	
23rd „	7 „	57·35	51·95	
24th „	7 „	57·65	52·30	
25th „	7 „	57·65	52·60	

Highest recorded level on 26-8-1879= 64·24.
Lowest recorded level on 24-4-1931 32·05.

S. GUPTA, *Subdivisional Officer,*
Irrigation Department, Rajshahi.

Rampur Boalia, the 25th July 1936.

Statement showing the gauge readings at Dacca Waterworks Station on the river Buriganga for the week ending 25th July 1936.

Date.	At highest water.		At lowest water.		Commencement of—		Remarks.	
	Time.	Reading.	Time.	Reading.	Ebb tide.	Flow tide.	7 a.m.	5 p.m.
1936.								
19th July ..							14·3	14·45
20th „ ..							14·6	14·75
21st „ ..							14·95	15·0
22nd „ ..	Tide is not perceptible.						15·2	15·3
23rd „ ..							15·45	15·55
24th „ ..							15·7	15·8
25th „ ..							15·9	15·95

Notable high and low water levels of previous years.

		Taken at high tide.			Taken at low tide.
27th August	1906 ..	70·5	23rd February	1907 ..	51·06
5th September	1909 ..	66·86	13th „	1908 ..	51·06
10th August	1910 ..	69·86	12th March	1912 ..	51·06
1st „	1911 ..	68·46	6th „	1914 ..	50·60
13th „	1912 ..	67·16	22nd February	1915 ..	50·30
31st „	1915 ..	69·7	15th „	1916 ..	50·60
8th „	1916 ..	68·1	3rd March	1917 ..	51·0
12th „	1917 ..	67·1	21st February	1918 ..	51·40
13th „	1918 ..	69·12	26th „	1919 ..	50·4
2nd „	1919 ..	66·8	18th „	1920 ..	50·9
8th September	1920 ..	66·9	19th „	1921 ..	50·9
28th July	1921 ..	68·4	8th March	1922 ..	51·05
10th August	1922 ..	68·00	14th „	1923 ..	50·8
31st July	1923 ..	66·15	16th February	1924 ..	50·50
29th August	1924 ..	68·82	5th March	1925 ..	50·9
8th September	1925 ..	68·52	9th February	1926 ..	2·2
15th August	1926 ..	19·6	27th „	1927 ..	2·10
17th September	1927 ..	18·70	16th „	1928 ..	2·2
22nd August	1928 ..	20·0	21st „	1929 ..	2·0
13th July	1929 ..	17·8	24th „	1930 ..	2·3
12th September	1930 ..	18·65	28th „	1931 ..	2·2
16th August	1931 ..	21·7	18th „	1932 ..	1·8
6th September	1932 ..	18·5	6th „	1933 ..	2·10
7th „	1933 ..	17·80	26th March	1934 ..	2·40
23rd August	1934 ..	19·35	15th February	1935 ..	1·70
1st September	1935 ..	19·80			

N.B.—Zero of the gauge at Dacca Waterworks prior to 11 a.m. on the 8th January 1926= −48·51 with reference to P. W. D. datum.

Zero of the gauge at Dacca Waterworks since 11 a.m. of the 8th January 1926=0·00 with reference to P. W. D. datum.

M. K. BHATTACHARJEE, *Executive Engineer,*
Khulna Division.

Khulna, the 31st July 1936.

FORM C—BENGAL.

STATEMENT OF COTTON PRESSED IN THE BENGAL PRESIDENCY FOR THE WEEK ENDING THE 18th JULY 1936.

[Section 5(2) of the Cotton Ginning and Pressing Factories Act, 1925.]

Name of Division or block.	Number of bales pressed.				District included in the block.
	During the week.	During the corresponding week last year.	Since 1st September 1935 (the date prescribed by the Local Government as the commencement of the season).	During the corresponding period last year.	
The Bengal Presidency	1,538 or 1,528·68 bales of 400 lbs. each.	1,718	63,397	43,203	All districts in the Presidency.

J. B. McBRIDE,

Chief Inspector of Factories, Bengal.

CORPORATION OF CALCUTTA.

Central Municipal Office, the 28th July 1936

NOTICE

It is hereby notified for general information that the Corporation of Calcutta under powers vested in them in this behalf have by a resolution, dated the 8th July 1936, prescribed the alignment of a 20 feet projected public street connecting Satchasipara Road with a sanctioned 40 feet projected road connecting Cossipore Road with Kasi Nath Dutt Road in Ward No 32

A copy of the plan prepared in this behalf may be seen in the office of the Chief Valuer and Surveyor of the Corporation any day between 11 a m and 3 p m on payment of usual fees

J. C. MUKERJEA,

Chief Executive Officer

Printed and published by the Superintendent, Government Printing, Bengal Government Press, Alipore, Bengal, on the 6th August 1936.

Registered No. C207.

SECRETARIAT
No. 33 of 1936

The Calcutta Gazette

Published by Authority

THURSDAY, AUGUST 13, 1936.

CONTENTS:

	Page.
PART I.—Orders and Notifications by the Governor of Bengal, the Government of Bengal, the High Court, Government Treasury, etc.	1905—1950
PART IA.—Orders and Notifications by the Government of India republished for general information	215—221
PART IB.—Educational Notices ..	1327—1339
PART II.—Advertisements ..	723—768
PART III.—Acts of the Bengal Legislative Council	*Nil*
PART IV.—Bills introduced in the Bengal Legislative Council, Reports of Select Committees presented or to be presented to that Council, and Bills published before introduction in that Council ..	*Nil*
PART V.—Acts of the Indian Legislature assented to by the Governor-General and Ordinances promulgated under section 72 of the Government of India Act ..	*Nil*
PART VI.—Bills introduced in the Council of State and Legislative Assembly, Reports of Select Committees presented to the Council and Assembly and Bills published under rule 18 of the Indian Legislative Rules	*Nil*
SUPPLEMENT No. 33 :—	
Cotton Ginning and Pressing—Daily Rain fall—River water-levels—Weekly Vital Statistics Weekly Weather and Crop Report—Prices current Major and Minor Works and Navigation—Weekly Gauge Readings	1091—1120
First Forecast of the Sugarcane Crop of Bengal, 1936-37	1121—1122

PART I

Orders and Notifications by the Governor of Bengal, the Government of Bengal, the High Court, Government Treasury, etc.

Orders by the Government of Bengal.

No. 7076A.

Appointments and Transfers.

GENERAL.

Birbhum-Presidency-Dacca Divisions.—No. 6833A.—3rd August 1936.—The Sub-Deputy Collectors named below, who are now employed in the Birbhum district on special work, are posted to the Divisions noted against their names:—

Babu Asit Kumar Biswas—Presidency Division.

Babu Suresh Chandra Sen Gupta—Dacca Division.

Howrah-Nadia.—No. 6747A.—30th July 1936. Maulvi Saiyid Ghulam Kabir, Deputy Magistrate and Deputy Collector, Howrah, is appointed temporarily to have charge of the Kushtia subdivision of the Nadia district.

Chittagong Hill Tracts - Jessore. — No. 6827A.—4th August 1936.—Mr. S. Dutt, I.C.S., officiating Deputy Commissioner, Chittagong Hill Tracts, is appointed temporarily to act as Magistrate and Collector, Jessore.

Chittagong-Faridpur.—No. 6865A.—5th August 1936.—Mr. Surendra Nath Bhattacharji, Deputy Magistrate and Deputy Collector, Chittagong, is transferred to the headquarters station of the Faridpur district.

Chittagong.—No. 6869A.—5th August 1936.—Maulvi Saiyid Ali Ahmad, Sub-Deputy Collector, on leave, is posted to the headquarters station of the Chittagong district.

Howrah.—No. 6873A.—5th August 1936.—Babu Sushil Chandra Ghosh, Deputy Magistrate and Deputy Collector, on leave, is posted to the headquarters station of the Howrah district.

Darjeeling. — No. 6963A. — 8th August 1936.—Mr. Basanta Kumar Mukharji, Deputy Magistrate and Deputy Collector, Darjeeling, is appointed temporarily to act as Deputy Commissioner of that district.

Nadia.—No. 6965A.—8th August 1936. — Mr. A. S. Roy, I.C.S., Joint Magistrate and Deputy Collector, Kushtia, Nadia, is appointed temporarily to act as Magistrate and Collector of that district.

Chittagong-Chittagong Divn.—No. 6973A. —8th August 1936.—Babu Sudarsan Chandra Maitra, Deputy Magistrate and Deputy Collector, Chittagong, is appointed to be Personal Assistant to the Commissioner of the Chittagong Division.

Hooghly-24-Parganas.—No. 7017A.—10th August 1936.—Mr. S. S. R. Hattiangadi, I.C.S., officiating Additional District and Sessions Judge, Hooghly, is appointed temporarily to act as an Additional District and Sessions Judge, 24-Parganas.

24-Parganas-Hooghly.—No. 7022A.—10th August 1936.—Babu Satish Chandra Chakrabatti, officiating Additional District and Sessions Judge, 24-Parganas, is appointed temporarily to act as Additional District and Sessions Judge, Hooghly.

Dacca Divn. — No. 7032A.—10th August 1936.—The orders contained in notification No. 6460A., dated the 24th July 1936, relating to the posting of Babu Mahendra Nath Chaudhuri, Sub-Deputy Collector, on leave, to the Dacca Division, are cancelled.

POLICE.

24-Parganas - Presidency Range. — No. 6840A.—4th August 1936.—Rai Bhola Nath Banarji Bahadur, I.P., Superintendent of Police, 24-Parganas, is appointed to act, until further orders, as Deputy Inspector-General of Police, Presidency Range.

24-Parganas.—No. 6843A.—4th August 1936.—Rai Sahib Tapendra Kumar Ghosh Chaudhuri, I.P., Superintendent of Police, Eastern Bengal Railway, Sealdah, is appointed to be Superintendent of Police, 24-Parganas.

Faridpur - 24-Parganas. — No. 6846A. — 4th August 1936.—Mr. Hirendra Nath Sarkar, I.P., officiating Additional Superintendent of Police, Faridpur, is appointed to act, until further orders, as Superintendent of Police, Eastern Bengal Railway, Sealdah.

Faridpur.—No. 6849A.—4th August 1936. —Khan Bahadur Ruknuddin Ahmad, Deputy Superintendent of Police, Faridpur, is appointed to act, until further orders, as Additional Superintendent of Police of that district and, under the provisions of section 1 of Act V of 1861, to perform the duties of a Superintendent of Police in that district.

Confirmation.

POLICE.

No. 6953A.—8th August 1936.—Mr. J. F. Cowgill, O.B.E., I.P., is confirmed in the superior scale of the Indian Police, with effect from the 6th July 1936.

Leave.

GENERAL.

Jessore.—No. 6823A.—4th August 1936.—Khan Bahadur Muhammad Fazlul Karim, Magistrate and Collector, Jessore, is allowed leave on average pay, under rule 81 (*b*), (*ii*) of the Fundamental Rules, from the 1st September 1936 to the 22nd October 1936, inclusive.

Bankura.—No. 6859A.—5th August 1936.—Mr. H. C. Gupta, I.C.S., Assistant Magistrate and Collector, Bankura, was allowed leave not due on half average pay for one day, viz., the 13th October 1935, under rule 81 (*c*) (*ii*) of the Fundamental Rules.

Faridpur.—No. 6949A.—8th August 1936. —Khan Bahadur Abu Ali Muhammad Chaudhuri, Deputy Magistrate and Deputy Collector, Faridpur, is allowed leave on average pay up to the 20th September 1936, under rule 81 (*b*) (*ii*) of the Fundamental Rules, with effect from the 3rd August 1936, or any subsequent date on which he may be relieved.

Murshidabad.—No. 6956A.—8th August 1936.—Mr. G. B. Synge, I.C.S., officiating District and Sessions Judge, Murshidabad, is allowed leave with effect from the 4th September 1936, or any subsequent date on which he may be relieved, up to the commencement of the civil court vacation of 1937, viz., leave on average pay for six months and twenty-seven days, under rule 81 (*b*) (*i*) of the Fundamental Rules, and leave on half average pay for the remaining period, under rule 81 (*d*) of those Rules.

No. 7030A. — 10th August 1936.—Babu Mahendra Nath Chaudhuri, Sub-Deputy Collector, is allowed leave on average pay for three weeks, under rule 81 (*b*) (*ii*) of the Fundamental Rules, in extension of the leave granted to him under the orders of the 30th June 1936.

G. P. HOGG,

Chief Secy. to the Govt. of Bengal.

POLITICAL DEPARTMENT.

Political.

NOTIFICATIONS.

No. 12480P.—3rd August 1936.—The following draft of a notification which it is proposed to issue under section 22 of the Port Haj Committees Act, 1932 (XX of 1932), is published as required by sub-section (*1*) of section 23 of the said Act, for information of all persons likely to be affected thereby, and notice is hereby given that the draft will be taken into consideration by the Governor in Council on or after the 3rd September 1936.

Any objection or suggestion which may be sent to the Chief Secretary to the Government of Bengal by any person with respect to the said draft on or before the aforesaid date will be considered by the Governor in Council :—

Draft notification.

In exercise of the powers conferred by section 22 of the Port Haj Committees Act, 1932 (XX of 1932), the Governor in Council is pleased to make the following amendment to rule 31 of the Calcutta Part Haj Committee Rules, 1933, published with notification No. 13604P., dated the 2nd December 1933 :—

Substitute the words "the Reserve Bank of India" for the words "Imperial Bank of India" occurring in line 4.

No. 12661P.—8th August 1936. — In pursuance of the provision of sub-section (*2*) of section 14 of the Cantonment Act, 1924 (Act II of 1924), the Governor in Council is pleased to declare that a vacancy has occurred in the Barrackpore Cantonment Board by reason of the acceptance of the resignation tendered by Major W. M. Newill, M.C., clerk of the Course, Royal Calcutta Turf Club, Barrackpore, of his office of the said Board.

No. 12666P.—8th August 1936.—In pursuance of the provision of sub-section (*2*) of section 14 of the Cantonments Act (Act II of 1924), the Governor in Council is pleased to appoint Major J. Nethersole to be a member of the Barrackpore Cantonment Board, *vice* Major W. M. Newill, M.C., clerk of the Course, Royal Calcutta Turf Club, resigned.

G. P. HOGG,

Chief Secy. to the Govt. of Bengal.

JUDICIAL DEPARTMENT.

Appointments and Transfers.

Pabna-Bogra. — No. 5932J.—4th August 1936.—Maulvi Md. Abdus Samad, additional munsif of Bogra, is appointed temporarily to be additional munsif of Serajganj, in the district of Pabna and Bogra.

Tippera.—No. 5935J.—4th August 1936.—Babu Kalipada Mukharji, munsif of Brahmanbaria, in the district of Tippera, is appointed to be a munsif in the said district to be ordinarily stationed at Comilla.

Bankura-Chittagong. — No. 5938J. — 4th August 1936.—Maulvi Khondkar Mutheral Islam, munsif of Bankura (Sadar), is appointed to be a munsif in the district of Chittagong, to be ordinarily stationed at Patiya, *vice* Babu Santosh Kumar Mitra.

Pabna-Bogra-Bankura. — No. 5941J.—4th August 1936.—Babu Bhabataran Mukharji, munsif of Bogra, in the district of Pabna and Bogra, is appointed to be a munsif in the district of Bankura, to be ordinarily stationed at the Sadar station.

Pabna-Bogra. — No. 5944J. — 4th August 1936.—Babu Harendra Krishna Mukharji, munsif, on leave, is appointed to be a munsif in the district of Pabna and Bogra, to be ordinarily stationed at Bogra.

24-Parganas. — No. 5947J. — 4th August 1936.—In exercise of the powers conferred by sections 14 and 15 and the proviso to section 357 of the Code of Criminal Procedure, 1898 (Act V of 1898), the Governor in Council is pleased—

(*a*) to confer upon Maulvi Syed Nazra Moslem the powers of a Magistrate of the second class, in the district of the 24-Parganas, for a period of three years from the 5th August 1936, in respect to such cases as may be made over to him within the limits of the Barasat subdivision of the said district,

(*b*) to direct that he shall, in addition to sitting singly, sit as a member of the Barasat bench in the said district, and

(*c*) to direct him to take down evidence in the English language.

Hooghly. — No. 5965J.—4th August 1936. —In exercise of the powers conferred by section 14 and the proviso to section 357 of the Code of Criminal Procedure, 1898 (Act V of 1898), the Governor in Council is pleased—

(*a*) to confer upon Mr. Robert Llewellyn Manners the powers of a Magistrate of the second class, in the district of Hooghly, for a period of three years from the 6th August 1936, in respect to such cases as may be made over to him within the limits of the Rishra-Konnagar Municipality of the said district, and

(*b*) to direct him to take down evidence in the English language.

Midnapore.—No. 6120J.—7th August 1936. —In exercise of the powers conferred by sections 14 and 15 and the proviso to section 357 of the Code of Criminal Procedure, 1898 (Act V of 1898), the Governor in Council is pleased—

(*a*) to confer upon the Hon'ble Mr. Mahmood Suhrawardy the powers of a Magistrate of the second class, in the district of Midnapore, for a period of three years from the 25th August 1936, in respect to such cases as may be made over to him within the limits of the Sadar subdivision of the said district,

(*b*) to direct that he shall, in addition to sitting singly, sit as a member of the Sadar bench in the said district, and

(*c*) to direct him to take down evidence in the English language.

Nadia-Jessore.—No. 6143J.—7th August 1936.—Babu Kalipada Chattaraj, probationary munsif, now employed as additional munsif (on training) at Krishnagar, in the district of Nadia, is appointed to act as a munsif in the district of Jessore, to be ordinarily stationed at Magura, during the absence, on leave, of Babu Upendra Narayan Mazumdar, or until further orders.

Hooghly.—No. 6146J.—7th August 1936. —In exercise of the powers conferred by sections 14 and 15 and the proviso to section 357 of the Code of Criminal Procedure, 1898 (Act V of 1898), the Governor in Council is pleased—

(*a*) to confer upon Babu Atul Behari Goswami the powers of a Magistrate of the first class, in the district of Hooghly, for a period of three years from the date of this notification, in respect to such cases as may be made over to him within the limits of the Serampore subdivision of the said district,

(*b*) to direct that he shall, in addition to sitting singly, sit as a member of the Serampore bench in the said district, and

(*c*) to direct him to take down evidence in the English language.

Leave.

Calcutta.—No. 5929J.—4th August 1936.—Mr. Mowdudur Rahman, Barrister-at-Law, Judge, Small Cause Court, Calcutta, is allowed leave for the period from the 2nd July 1936 to the 13th October 1936, viz., leave on average pay for twenty-two days, under Fundamental Rule 81(*b*) (*ii*), leave on average pay, on medical certificate, for twenty days, under the proviso to rules 81(*b*) (*ii*) and 82(*c*) of those rules, leave on half average pay on account of urgent necessity for twenty-eight days, under rules 81(*d*) and 82(*c*) of those rules, and thereafter leave not due on half average pay, on medical certificate, under rules 81(*c*) (*i*) and 81(*d*) of those rules.

Powers.

Midnapore.—No. 6152J.—7th August 1936. —Babu Nishakar Chaudhuri, munsif of Midnapore (Sadar), is vested with powers to exercise final jurisdiction in the trial of suits for the recovery of rent under section 153(*b*) of the Bengal Tenancy Act, VIII of 1885.

NOTIFICATIONS.

Rangpur.—No. 5949J.—4th August 1936. —In exercise of the power conferred by section 65 of the Bengal Village Self-Government Act, 1919 (Bengal Act V of 1919), the Governor in Council is pleased to appoint Munshi Majarulla Shah, a member of the Betgari union board within the Gangachara police-station in the Sadar subdivision of the Rangpur district, to be, during his term of office as such member, a member of the union bench within the jurisdiction of the said union board for the purposes of that section.

Rangpur. — No. 5950J. — 4th August 1936.—In exercise of the power conferred by section 73 of the Bengal Village Self-Government Act, 1919 (Bengal Act V of 1919), the Governor in Council is pleased to appoint Babu Purna Chandra Sarkar, a member of the Betgari union board within the Gangachara police-station in the Sadar subdivision of the Rangpur district, to be, during his term of office as such member, a member of the union court within the jurisdiction of the said union board for the purposes of that section.

Bakarganj.—No. 5952J.—4th August 1936.—In exercise of the power conferred by section 65 of the Bengal Village Self-Government Act, 1919 (Bengal Act V of 1919), the Governor in Council is pleased to appoint the following members of the Chirapara-Parsaturia union board, within the Kowkhali police-station in the Perojpur subdivision of the Bakarganj district, to be, during their term of office as such members, a union bench within the jurisdiction of the said union board for the purposes of that section:—

Maulvi Momtazuddin Jamaddar.

Maulvi Abdul Aziz Taluqdar.

Maulvi Hatemali Sardar.

Munshi Sheikh Gaganali.

Babu Srikanta Pal.

2. This notification will take effect from the date of the first meeting of the reconstituted union board at which a quorum is present.

Bakarganj.—No. 5953J.—4th August 1936.—In exercise of the power conferred by section 73 of the Bengal Village Self-Government Act, 1919 (Bengal Act V of 1919), the Governor in Council is pleased to appoint the following members of the Chirapara-Parsaturia union board within the Kowkhali police-station in the Perojpur subdivision of the Bakarganj district, to be, during their term of office as such members, a union court within the jurisdiction of the said union board for the purposes of that section:—

Maulvi Momtazuddin Jamaddar

Maulvi Abdul Aziz Taluqdar.

Maulvi Hatemali Sardar

Munshi Sheikh Gaganali.

Babu Srikanta Pal.

2. This notification will take effect from the date of the first meeting of the reconstituted union board at which a quorum is present.

Nadia.—No. 5961J.—4th August 1936. In exercise of the power conferred by section 65 of the Bengal Village Self-Government Act, 1919 (Bengal Act V of 1919), the Governor in Council is pleased to appoint the following members of the union boards mentioned below, to be, during their term of office as such members, union benches within the jurisdiction of the union boards of which they are respectively members for the purposes of that section:—

Chuadanga subdivision, Nadia district.

Chuadanga police-station.

Maminpur union board.

Khan Sahib Abdul Jubbar Biswas.
Babu Matilal Brahmachari.
Babu Atal Behari Pal.

Padmabil union board.

Babu Amiyabhusan Chaudhuri.
Babu Balaram Biswas.
Munshi Golam Abbas Joarder.

Begampur union board.

Babu Savaram Ray.
Munshi Mozaharali Mandal.
Babu Bisweswar Gangali.

Damurhuda police-station.

Damurhuda union board.

Babu Niskalanka Sinha Ray.
Munshi Bhaduruddin Khan.
Babu Gopiballav Mitra.
Babu Bholanath Santara.

Natipota union board.

Babu Mohimohon Sarkar.
Munshi Mafizuddin Ahmed.
Babu Sachindranath Biswas.

2. This notification will take effect from the date of the first meeting of the reconstituted union boards at which a quorum is present.

Nadia.—No. 5962J.—4th August 1936.—In exercise of the power conferred by section 73 of the Bengal Village Self-Government Act, 1919 (Bengal Act V of 1919), the Governor in Council is pleased to appoint the following members of the union boards mentioned below, to be, during their term of office as such members, union courts within the jurisdiction of the union boards of which they are respectively members for the purposes of that section:—

Chuadanga subdivision, Nadia district.

Chuadanga police-station.

Maminpur union board.

Khan Sahib Abdul Jubbar Biswas
Babu Matilal Brahmachari
Babu Atal Behari Pal.

Padmabil union board.

Babu Amiyabhusan Chaudhuri.
Babu Balaram Biswas.
Munshi Golam Abbas Joarder.

Begampur union board.

Babu Savaram Ray.
Munshi Mozaharali Mandal.
Babu Bisweswar Gangali.

Damurhuda police-station.

Damurhuda union board.

Babu Niskalanka Sinha Ray.
Munshi Bhaduruddin Khan.
Babu Gopiballav Mitra.
Babu Bholanath Santara.

Natipota union board.

Babu Mahimohon Sarkar.
Munshi Mafizuddin Ahmed.
Babu Sachindranath Biswas.

2. This notification will take effect from the date of the first meeting of the reconstituted union boards at which a quorum is present.

Nadia.—No. 6026J.—4th August 1936.—In exercise of the power conferred by section 65 of the Bengal Village Self-Government Act, 1919 (Bengal Act V of 1919), the Governor in Council is pleased to appoint the following members of the union boards mentioned below, in the Kushtia subdivision of the Nadia district, to be, during their term of office as such members, union benches within the jurisdiction of the union boards of which they are, respectively, members for the purposes of that section:—

Kushtia police-station.

Hatosh Haripur union board.

Maulvi Muhammad Harun-ur-Rashid
Maulvi Muhammad Abul Khayer.
Babu Hriday Nath Mondal.
Munshi Minajuddin Pramanik.
Maulvi Muhammad Abdur Rahman.

Majampur union board.

Maulvi Fazlul Bari Chaudhuri.
Maulvi Abdul Jobbar Chaudhuri.
Babu Bishnucharan Ghosh.
Munshi Huzzatulla Mondal.
Maulvi Mobarak Hossain Biswas.

Patikabari union board.

Babu Surendra Nath Pal.
Munshi Hazari Biswas.
Babu Ramnath Saha.
Munshi Elahi Box Biswas.
Babu Rati Kanta Pal.

Kumarkhali police-station.

Shelidah union board.

Munshi Nuruddin Ahmed.
Munshi Abu Doud.
Babu Satish Chandra Ghosh.
Babu Ajit Nath Nandi.

Jagannathpur union board.

Maulvi Syed Abul Fazal.
Babu Satish Chandra Sarkar.
Munshi Abdul Gani.
Babu Kunja Bihari Sarkar.

Khoksa police-station.

Someshpur union board.

Babu Akshoy Bhusan Ghosh.
Munshi Khondkar Muhammad Tajuddin.
Munshi Kesmat Ali Khan.
Babu Rajendra Nath Basu.

Bheramara police-station.

Bheramara union board.

Babu Bhabesh Chandra Majumdar.
Babu Khagendra Nath Biswas.
Munshi Kafiluddin Ahmed.
Munshi Muhammad Fateh Ali.
Dr. Muhammad Afiluddin Mian.

Bahadurpur union board.

Dr. Nibaran Chandra Mukharji.
Babu Panchanan Ray.
Babu Srimanta Kundu.
Munshi Muhammad Mozaffar Hossain.
Munshi Muhammad Erad Ali.

Daulatpur police-station.

Mathurapur union board.

Maulvi Muhammad Sariat Ulla.
Babu Jagat Chandra Pal.
Munshi Mir Haidar Ali.
Munshi Muhammad Altaf Hossain Mian.

Mirpur police-station

Talbaria union board.

Babu Rakhalraj Saha.
Babu Surendra Nath Saha.
Munshi Majjam Hussain Biswas.
Munshi Abdul Jalil.

Mirpur union board.

Maulvi Muhammad Mosaraf Hussain Chaudhuri.
Munshi Syed Ali Biswas.
Babu Sarat Chandra De.
Babu Bancha Ram Nath.
Babu Amiya Charan Datta.

Amla union board.

Babu Sudhir Kumar Goswami.
Maulvi Kazi Aftabuddin.
Maulvi Mirja Kauseruddin Ahmed.
Babu Mukunda Lal Saha.

Kursha union board.

Babu Debendra Nath Joardar.
Dr. Tanjilar Rahman.
Munshi Abul Hussain Biswas.
Munshi Ahmed Ali Biswas.
Babu Surendra Nath Joardar.

2. This notification will take effect from the date of the first meeting of the reconstituted union boards at which a quorum is present.

Nadia.—No. 6027J.—4th August 1936.—In exercise of the power conferred by section 73 of the Bengal Village Self-Government Act, 1919 (Bengal Act V of 1919), the Governor in Council is pleased to appoint the following members of the union boards mentioned below, in the Kushtia subdivision of the Nadia district, to be, during their term of office as such members, union courts within the jurisdiction of the union boards of which they are, respectively, members for the purposes of that section:—

Kushtia police-station.

Hatosh Haripur union board.

Maulvi Muhammad Harun-ur-Rashid.
Maulvi Muhammad Abul Khayer.
Babu Hriday Nath Mondal.
Munshi Minajuddin Pramanik.
Maulvi Muhammad Abdur Rahman.

Majampur union board.

Maulvi Fazlul Bari Chaudhuri.
Maulvi Abdul Jobbar Chaudhuri.
Babu Bishnucharan Ghosh.
Munshi Huzzatulla Mondal.
Maulvi Mobarak Hossain Biswas.

Patikabari union board.

Babu Surendra Nath Pal.
Munshi Hazari Biswas.
Babu Ramnath Saha.
Munshi Elahi Box Biswas.
Babu Rati Kanta Pal.

Kumarkhali police-station.

Shelidah union board.

Munshi Nuruddin Ahmed.
Munshi Abu Doud.
Babu Satish Chandra Ghosh.
Babu Ajit Nath Nandi.

Jagannathpur union board.

Maulvi Syed Abul Fazal.
Babu Satish Chandra Sarkar.
Munshi Abdul Gani.
Babu Kunja Bihari Sarkar.

Khoksa police-station.

Someshpur union board.

Babu Akshoy Bhusan Ghosh.
Munshi Khondkar Muhammad Tajuddin.
Munshi Kesmat Ali Khan.
Babu Rajendra Nath Basu.

Bheramara police-station.

Bheramara union board.

Babu Bhabesh Chandra Majumdar.
Babu Khagendra Nath Biswas.
Munshi Kafiluddin Ahmed.
Munshi Muhammad Fateh Ali.
Dr. Muhammad Afiluddin Mian.

Bahadurpur union board.

Dr. Nibaran Chandra Mukharji.
Babu Panchanan Ray.
Babu Srimanta Kundu.
Munshi Muhammad Mozaffar Hossain.
Munshi Muhammad Erad Ali.

Daulatpur police-station.

Mathurapur union board.

Maulvi Muhammad Sariat Ulla.
Babu Jagat Chandra Pal.
Munshi Mir Haidar Ali.
Munshi Muhammad Altaf Hossain Mian.

Mirpur police-station.

Talbaria union board.

Babu Rakhalraj Saha.
Babu Surendra Nath Saha.
Munshi Majjam Hussain Biswas.
Munshi Abdul Jalil.

Mirpur union board.

Maulvi Muhammad Mosaruf Hussain Chaudhuri.
Munshi Syed Ali Biswas.
Babu Sarat Chandra De.
Babu Buncha Ram Nath.
Babu Amiya Charan Datta.

Amla union board.

Babu Sudhir Kumar Goswami.
Maulvi Kazi Aftabuddin.
Maulvi Mirja Kauseruddin Ahmed.
Babu Mukunda Lal Saha.

Kursha union board.

Babu Debendra Nath Joardar.
Dr. Tanjilar Rahman.
Munshi Abul Hussain Biswas.
Munshi Ahmed Ali Biswas.
Babu Surendra Nath Joardar.

2. This notification will take effect from the date of the first meeting of the reconstituted union boards at which a quorum is present.

Dinajpur.—No. 6113J.—7th August 1936.—In exercise of the power conferred by section 65 of the Bengal Village Self-Government Act, 1919 (Bengal Act V of 1919), the Governor in Council is pleased to appoint the following members of the union boards noted below, to be, during their term of office as such members, union benches within the jurisdiction of the union boards of which they are, respectively, members for the purposes of that section:—

Balurghat subdivision, Dinajpur district.

Balurghat police-station.

No. VII Danga union board.

Babu Jogendra Nath Ghosh.
Munshi Haji Mamud Mondal.
Munshi Basiruddin Mondal.
Munshi Moshtulla Mondal.

No. IX Amritakhanda union board.

Munshi Komaruddin Chaudhuri.
Munshi Didarbaksha Ahmed.
Munshi Jashuruddin Mondal.
Munshi Dhir Muhammad Mondal.

Kumarganj police-station.

No. VI Deor union board.

Babu Gangesh Chandra Chattarji.
Babu Ram Chandra Sarkar.
Babu Mrigendra Nath Burman.
Munshi Manik Muhammad Shah.

Patnitola police-station.

No. IX Najipur union board.

Babu Sachindra Nath Kundu.
Munshi Osmangani Mia.
Munshi Misa Muhammad Mondal.
Babu Rohini Kanta Mondal.

Tapan police-station.

No. VIII Gurail union board.

Munshi Dhan Muhammad Sarkar.
Munshi Tajimuddin Shah.
Babu Badan Chandra Sarkar.

No. VI Tapan-Chandipur union board.

Babu Lal Chand Baid.
Babu Harendra Narayan Singha.
Munshi Najiruddin Ahmed Sarkar.

Porsha police-station.

No. III Shiranti union board.

Maulvi Shamsuzzoha Chaudhuri.
Munshi Ear Muhammad Mia.
Babu Jogendra Nath Shah.
Babu Abani Mohan Datta.

Dinajpur.—No. 6114J.—7th August 1936.—In exercise of the power conferred by section 73 of the Bengal Village Self-Government Act, 1919 (Bengal Act V of 1919), the Governor in Council is pleased to appoint the following members of the Ganguria union board within the Porsha police-station in the Balurghat subdivision of the Dinajpur district, to be, during their term of office as such members, a union court within the jurisdiction of the said union board for the purposes of that section:—

Munshi Aftabuddin Ahmed Mia.

Munshi Hamidulla Shah.

Babu Kailash Chandra Mondal.

Munshi Chantulla Mondal.

Noakhali.—No. 6154J.—7th August 1936.—In exercise of the power conferred by section 73 of the Bengal Village Self-Government Act, 1919 (Bengal Act V of 1919), the Governor in Council is pleased to appoint Munshi Haji Abdul Gani Mazumder, a member of the Amjadhat union board within the Chhagalnaiya police-station in the Feni subdivision of

the Noakhali district, to be, during his term of office as such member, a member of the union court within the jurisdiction of the said union board for the purposes of that section, *vice* Babu Bepin Chandra Chakrabatti, deceased.

Dacca.—No. 6156J.—7th August 1936.—In exercise of the power conferred by section 65 of the Bengal Village Self-Government Act, 1919 (Bengal Act V of 1919), the Governor in Council is pleased to appoint Munshi Piar Ali Sarkar, a member of the Balia union board within the Dhamrai police-station in the Sadar (North) subdivision of the Dacca district to be, during his term of office as such member, a member of the union bench within the jurisdiction of the said union board for the purposes of that section, *vice* Mir Masnad Ali, deceased.

Dacca.—No. 6157J.—7th August 1936.—In exercise of the power conferred by section 73 of the Bengal Village Self-Government Act, 1919 (Bengal Act V of 1919), the Governor in Council is pleased to appoint Munshi Piar Ali Sarkar, a member of the Balia union board within the Dhamrai police-station in the Sadar (North) subdivision of the Dacca district to be, during his term of office as such member, a member of the union court within the jurisdiction of the said union board for the purposes of that section, *vice* Mir Masnad Ali, deceased.

T. ROXBURGH,
Secy. to the Govt. of Bengal (offg.).

LOCAL SELF-GOVERNMENT DEPARTMENT.

NOTIFICATIONS.

Minister-in-charge: The Hon'ble Sir Bijoy Prasad Singh Roy, Kt.

Midnapore.—No. 6102M.—3rd August 1936.—The following draft of by-laws, which has been framed by the Commissioners of the Midnapore Municipality, in the district of Midnapore, under section 245 (*a*) and (*b*) of the Bengal Municipal Act, 1932 (Bengal Act XV of 1932), and which the Government of Bengal (Ministry of Local Self-Government) propose to confirm under section 506 of the Act, is published for the information of persons likely to be affected thereby.

2. The draft will be taken into consideration on the 2nd November 1936 and any objection or suggestion received by the undersigned through the District Magistrate and the Divisional Commissioner before that date will be duly considered:—

Draft by-laws.

By-laws regarding prohibition and regulation of traffic under section 245 (a) and (b) of the Bengal Municipal Act, 1932.

Definition.

1. In these by-laws "cattle" means cattle as defined in section 3 the Cattle Trespass Act, 1871 (I of 1871).

Penalties.

2. *Fines.*—The penalty for the infringement of any of these by-laws shall be—

(*a*) a fine not exceeding the sum stated at the foot of the by-law,

(*b*) in the case of a second or subsequent conviction for a similar offence a fine not exceeding the sum (if any) stated in that behalf at the foot of the by-law, and

(*c*) in the case of a continuing offence, a further fine, not exceeding the sum (if any) stated at the foot of the by-law as the daily fine, which daily fine may be imposed for each day after written notice of the offence from the Commissioners.

Regulation of traffic on public streets.

3. *Youthful drivers.*—No owners of any carriage or cart shall allow it to be driven on any public streets by a driver under fourteen years of age.

Fine, Rs. 10.

4. *Driving more than one carriage or cart.*—No driver shall drive or have in his charge on any public street more than one carriage or cart, except in the case of two carts the hinder one of which is severely fastened to the preceding cart.

Fine, Rs. 10.

5. *Standing vehicles.*—No person shall keep standing on any public street any vehicle in such a manner as to cause inconvenience to the public, for any time longer than may reasonably be required for loading or unloading or for taking up or setting down passengers.

Fine, Rs. 10; on a second or subsequent conviction, Rs. 50.

6. *Charge of carriage or cart.*—No person shall leave any carriage or cart on any public street without a person in charge thereof.

Fine, Rs. 10; on a second or subsequent conviction, Rs. 50.

7. *Rule of the road.*—Any person driving a carriage or cart, or riding a bicycle, or driving or riding an animal, or carrying a palanquin, on any public street, shall keep to his left when he passes a vehicle coming from the opposite direction or when any vehicle overtakes him, and shall keep to his right when overtaking any vehicle.

Fine, Rs. 10.

8. *Lights.*—No person shall drive any of the undermentioned vehicles or animals, or convey any palanquin, on any public street, between half-an-hour after sunset and half-an-hour before sunrise, unless lights are provided as follows:—

(*a*) every carriage must carry two conspicuous lights, one on each side;

(*b*) every cart must carry one conspicuous light;

(*c*) every elephant, camel or palanquin must be accompanied by one conspicuous light;

(*d*) every cycle must carry one conspicuous light in front.

Provided that this by-law shall not apply on nights of full-moon or on the four nights before and after full-moon, if and when the moon is clearly visible.

Fine, Rs. 50.

9. *Signals on motors and cycles.*—No person shall drive any motor-car, or ride any motor-cycle or any tricle or bicycle, on any public street unless it has attached to it a bell, horn or other suitable signal in good order.

Fine, Rs. 50.

10. *Maximum load for carts.*—No cart, shall, without the general or special permission of the Commissioners, carry on any public street a load in excess of twenty maunds.

Fine, Rs. 10.

11. *Vehicles laden with girders, etc.*—No person shall drive upon a public street any vehicle laden with iron girders, rails, beams, bullas, bamboos, planks or other materials of a similar character which exceed twelve feet in length, unless the vehicle be accompanied by another person and be loaded in such a way that no portion of the said materials touches the ground.

Fine, Rs. 10.

12. *Vehicles laden with bricks, stones, etc.*—No person shall drive upon a public street any vehicle laden with bricks, stones or other materials of a similar character, unless such materials be so secured that they cannot fall on to the street.

Fine, Rs. 10.

13. *Animal laden with bamboos or timber.*—No person shall convey on any public street bamboos or timber placed on the back on any animal in such a way that any portion of such bamboos or timber touches the ground.

Fine, Rs. 10.

14. *Taking elephants or camels along a public street.*—No person shall, without the general or special permission of the commissioners, take any elephant or camel along any public street.

Fine, Rs. 50.

15. *Taking an elephant over a bridge.*—No person shall allow any elephant in his charge to go over any bridge on any public street unless the bridge be constructed of arched masonry, steel or ferro-concrete or similar durable material.

Fine, Rs. 50.

16. *Loaded pack-animals.*—No person shall drive upon a public street, at the same time, more than two loaded pack-animals.

Fine, Rs. 10.

17. *Foals.*—No person riding or driving a mare on any public street shall allow a foal to accompany the mare unless it is secured.

Fine, Rs. 10.

18. *Driving cart in centre of a public street.*—No person shall drive a cart on the centre of any public street on which cart-tracks are provided.

Fine, Rs. 10.

19. *Sitting or sleeping.*—No person shall sit or sleep on any public street so as to obstruct traffic.

Fine, Rs. 10.

Regulation of traffic on foot-paths.

20. *Driving or riding on foot-path.*—No person shall wilfully drive or ride any vehicle or cattle on any foot-path set apart for the use of foot-passengers.

Fine, Rs. 10.

Prevention of obstructions, encroachments or excavations on or near public streets, ghats or ferries.

21. *Abandoning or letting loose cattle.*—No person shall abandon or let loose or negligently allow to get loose, any cattle, on any public street.

Fine, Rs. 10.

22. *Children playing or wandering.*—No parent or guardian of any child below the age of seven years shall allow such child to play or wander about on any public street so as to obstruct traffic.

Fine, Rs. 10.

23. *Depositing articles.*—No person shall, without the general or special permission of the commissioners, deposit any articles on any public street, except for a temporary purpose, or use any public street as a place for keeping any vehicle or cattle, or for washing any article, or for any other private purpose:

Provided that, during the months of April, May and June, between the hours of 10 p.m. and 5 a.m., khatias may be laid on the side of a public street in such a manner as not to cause obstruction or danger to persons using the public street.

Fine, Rs. 10.

24. *Planting trees.*—No person shall plant a tree on any public street without the general or special permission of the commissioners.

Fine, Rs. 10.

25. *Excavations and enclosures.*—No person shall, without the general or special permission of the commissioners, make any excavation on any public street or on or near any ghat or public ferry or enclose any such street or any part thereof.

Fine, Rs. 10; daily fine Rs. 2.

26. *Removing turf or cutting grass.*—No person shall, without the general or special permission of the commissioners, remove turf or cut grass from any public street or the slopes thereof.

Fine, Rs. 10.

27. *Discharge of water.*—No person shall affix or cause to be affixed to any building owned or occupied by him any gutter, spout or other thing intended for the conveyance and discharge of water, or shall leave in any such building any opening for the discharge of water, in such a way that the water discharged therefrom is thrown or falls upon a public street except through a downpipe or other suitable contrivance reaching to the level of the public street.

Fine, Rs. 10; daily fine, Rs. 2.

28. *Breaking in horses.*—No person shall break in horses on any public street not set apart for that purpose.

Fine, Rs. 10; on a second or subsequent conviction, Rs. 50.

29. *Flying kites.*—No person shall fly a kite on any public street or in such a way that it may fall on any public street.

Fine, Rs. 10.

30. *Playing games.*—No person shall play any game on any public street.

Fine, Rs. 10.

31. *Throwing stones or missiles.*—No person shall throw or discharge any stone or missile on or near any public street.

Fine, Rs. 10.

32. *Driving across a drain.*—No person shall drive any vehicle across a public drain in or near any public street so as to cause damage to such drain.

Fine, Rs. 10.

33. *Barbed wire.*—No owner or occupier of land abutting on any public street shall fence such land with barbed wire.

Fine, Rs. 10; daily fine, Rs. 2.

34. *Dust-bins.*—No person shall—

(*a*) place any burning material in any municipal dust-bin on or near a public street, or

(*b*) burn in any such dust-bin any paper, leaves, grass, wood or other material.

Fine, Rs. 10.

35. *Closed public street.*—No person shall take or drive any motor vehicle, carriage or cart on a public street or part of a street which is closed by order of the commissioners to all or any specified description of wheeled traffic or displace any barrier or fence or notice erected for the purpose of closing such public street or part thereof.

Fine, Rs. 10.

Regulation of the use or occupation of public streets or places for sale of articles, etc., and provision for the levy of fees for such use or occupation.

36. *Exposing articles for sale.*—Without the general or special permission of the commissioners which may, if they so direct, be

subject to the payment of fees according to a scale prescribed by them at a meeting, no person shall use or occupy any public street or any other public place, for the sale of any article or for the exercise of any calling or for setting up any booth or stall.

Fine, Rs. 10; on a second or subsequent conviction, Rs. 50.

No. 6182M.—8th August 1936.—In exercise of the powers conferred by sub-section (*1*) of section 8 of the Provident Funds Act, 1925 (XIX of 1925), the Government of Bengal (Ministry of Local Self-Government) are pleased to direct that the provisions of the said Act shall apply to the provident fund established by the Board of Trustees for the Improvement of Calcutta under section 31, sub-section (*c*) of the Calcutta Improvement Act, 1911 (Bengal Act V of 1911).

2. Notification by the Government of India, Department of Education, No. 135, dated the 14th August 1912, is hereby cancelled.

Rajshahi.—No. 6136M.—4th August 1936.—In exercise of the power conferred by section 58 (*2*) of the Bengal Municipal Act, 1932 (Bengal Act XV of 1932), the Government of Bengal (Ministry of Local Self-Government) are pleased to appoint Khan Sahib Abdur Rahaman Khan to be a Commissioner of the Rajshahi Municipality, vice Khan Bahadur Maulvi Emaduddin Ahmed, deceased.

Bankura.—No. 6171M.—7th August 1936.—In exercise of the power conferred by section 58 (*2*) of the Bengal Municipal Act, 1932 (Bengal Act XV of 1932), the Government of Bengal (Ministry of Local Self-Government) are pleased to appoint Babu Kumud Krishna Banarji to be a Commissioner of the Bankura Municipality, *vice* Rev. A. E. Brown, C.I.E., resigned.

24-Parganas.—No. 6199M. — 11th August 1936.—On the recommendation of the Commissioners of the Jaynagar Municipality in the district of the 24-Parganas made at a meeting, the Government of Bengal (Ministry of Local Self-Government) are pleased to direct that the municipality be henceforth called the Jaynagar-Majilpur Municipality.

G. S. DUTT,

Secy. to the Govt. of Bengal.

CALCUTTA, THE 11TH AUGUST 1936.

RESOLUTION—No. 6207M.

Minister-in-charge: The Hon'ble Sir Bijoy Prasad Singh Roy, Kt.

The attention of Government has been drawn to the unsatisfactory state of affairs that has been prevailing for sometime past in the administration of the Rajpur Municipality, in the district of the 24-Parganas. It appears that there are two rival parties among the Municipal Commissioners and the activities of party factions have been so injurious to municipal affairs that even the normal administration of the municipality is not being allowed to be carried on properly. The Chairman appears to be practically an absentee. The party in opposition succeeded in securing a majority, with the result that a majority of the Commissioners refused to pass the budget estimates for 1936-37 embodying the ordinary grants and reduced the grants to Re. 1 under certain essential heads, such as, education, dispensary, etc., with a view to bringing about a deadlock. Attempts to pass the budget after reinserting the ordinary grants proved fruitless. Repeated attempts were made by the Subdivisional Officer and the District Magistrate to bring about an amicable settlement between the parties, but these proved unsuccessful. The Chairman, whose party is in a minority, would not resign so as to remove the deadlock. On the other hand, the opposite party, although in a majority, could not secure the two-thirds majority necessary for his removal. Nor would the parties agree to come to a mutual understanding in the interest of the rate-payers whom it is their duty to serve.

2. The sweepers' service has been suspended by reason, among others, of the necessary grants for the purpose not being passed and conservancy arrangements have consequently broken down. In fact, there has been a complete deadlock in the municipal administration, to the great suffering of the residents of the municipality.

3. The conduct of both the parties appears to Government to have been in utter disregard of their statutory duties and the interest of the rate-payers. It seems clear that while the Chairman is clinging to the chair although reduced to a state of impotence, the opposite party is determined to make the normal administration of the municipality impossible. In the circumstances Government are satisfied that the present body of Municipal Commissioners have persistently made default in the performance of the duties imposed on them by the Bengal Municipal Act, 1932, and have shown their incompetence to perform these duties. In exercise of the powers conferred on them by section 552 of the Bengal Municipal Act, 1932, the Government of Bengal (Ministry of Local Self-Government) accordingly direct that a fresh general election shall be held, and that fresh appointments shall be immediately made of persons to be Commissioners of the Rajpur Municipality in the district of the 24-Parganas.

4. Ordered that this resolution be published in the *Calcutta Gazette*.

By order of the Govt. of Bengal

(Ministry of Local Self-Govt.),

G. S. DUTT,

Secy. to the Govt. of Bengal.

Medical.

Minister-in-charge: The Hon'ble Sir Bijoy Prasad Singh Roy, Kt.

Khulna.—No. 3158Medl.—1st August 1936.—Dr. Narendra Nath Ghosh, Civil Surgeon, Khulna, is granted leave on average pay for eight days from the 14th April 1936, under rule 81(*b*)(*ii*) of the Fundamental Rules.

This department notification No. 2978Medl., dated the 15th July 1936, may be regarded as cancelled.

Calcutta.—No. 3184Medl.—5th August 1936.—Temporary Assistant Surgeon Dr. Bonomali Chakraverty is placed on supernumerary duty at the Medical College Hospitals, Calcutta, with effect from the 1st August 1936 or date of relief.

Calcutta.—No. 3207Medl. — 7th August 1936. - Dr. R. F. Mackenzie, I.M.D., House Surgeon, Presidency General Hospital, Calcutta, is granted leave on average pay for four months, under Fundamental Rule 100 (*a*) (*i*), with effect from the 29th May 1936.

Calcutta.—No. 3208Medl. — 7th August 1936.—Dr. Sudhansu Kumar Ganguly is appointed to act as House Surgeon, Presidency General Hospital, Calcutta, vice Dr. R. F. Mackenzie, I.M.D., granted leave.

Calcutta. — No. 3224Medl. — 8th August 1936.—Lt.-Col. R. Knowles, C.I.E., I.M.S., leceased, was allowed leave on average pay for seventeen days from the 15th July 1936, under rules 81 (*b*) (*i*) and 82 (*b*) of the Fundamental Rules, with permission to prefix the portion of the vacation of the School of Tropical Medicine, Calcutta, from the 29th June to the 14th July 1936, under rule 82 (*d*) of the Fundamental Rules.

NOTIFICATION.

Minister-in-charge: The Hon'ble Sir Bijoy Prasad Singh Roy, Kt.

Calcutta.—No. 3210Medl. — 7th August 1936.—In resolution No. 1887 Medl., dated the 15th April 1936, reconstituting the Visiting Committee for the Medical College group of hospitals, Calcutta, *add* the following against entries Nos. 11 and 12 in the list of members constituting the Committee:—

Kaviraj Satya Brata Sen—Representative of the Corporation of Calcutta.

Maulvi Md. Saadutullah, M.L.C—Representative of the Corporation of Calcutta.

Public Health.

NOTIFICATIONS.

Calcutta-Chittagong.—No. 3018P.H.—4th August 1936.—It is hereby notified for general information that Vizagapatam has been declared free from small-pox and that the regulations for the prevention of the introduction of small-pox by sea, which were imposed in the ports of Calcutta and Chittagong against vessels arriving from Vizagapatam, are hereby withdrawn.

Minister-in-charge: The Hon'ble Sir Bijoy Prasad Singh Roy, Kt.

No. 3010P.H.—3rd August 1936.—In exercise of the powers conferred by clause (*11*) (*b*) of section 3 of the Bengal Municipal Act, 1932 (Bengal Act XV of 1932), the Government of Bengal (Ministry of Public Health) are pleased to declare the following diseases to be dangerous diseases for the purposes of the said Act, namely:—

(1) Anthrax.

(2) Chicken-pox.

(3) Dysentery, both bacillary and amœbic.

(4) Enteric group of fevers.

(5) Leprosy.

(6) Measles.

(7) Relapsing fever.

(8) Tuberculosis of all forms.

(9) Typhus fever.

(10) Whooping cough.

(11) Epidemic dropsy.

Burdwan. —No. 3003P.H. —3rd August 1936 —Under rule 7 of the Local Authorities Loans Rules, 1915, as subsequently amended, it is hereby notified for general information that the Government of Bengal (Ministry of Public Health) intend to sanction the following application from the Commissioners of the Asansol Municipality for a loan of Rs. 1,40,000 from Government, bearing interest at the rate of 4 per cent. per annum and repayable in thirty equal annual instalments of Rs 8,096-5-3 each for the Asansol Municipal Sewerage Scheme, unless good reasons are shown to the contrary within one month from the date of publication of this notification.

Application from the Commissioners of the Asansol Municipality for a loan of Rs. 1,40,000.

1	2	3	4	Receipt of loan. (5)	(6)	(7)	(8)	(9)	Repayment of loan. (10)	(11)	Financial position of the local body. Revenue (details of the preceding three years). 12	Amount for— 1933-34. 13	1934-35. 14	1935-36. 15	Expenditure (details of the preceding three years). 16	Amount for— 1933-34. 17	1934-35. 18	1935-36. 19	20
At an estimated cost of Rs. 1,43,000.			of 1932.	years.	per annum.	instalments.	Rs. 50,000, " 90,000.	on the 1st October 1936. on the 1st October 1937.	on the 1st October every year.	Rs. 5,204-11-4 for (11).	Sources from which the revenue is derived.				Objects on which the expenditure is incurred.				The normal surplus which may be expected in future, i.e., difference between the average ordinary expenditure and the average ordinary revenue calculated on the figures in columns 13 to 15 and 17 to 19, respectively.
The work or works for which the loan is required and the estimate of the cost thereof.	The amount which it is proposed to borrow.	The fund or funds on the security of which it is proposed to borrow.	The law or laws under which the said fund or funds is or are levied, received or held.	The period for which the loan is required.	The rate of interest at which it is proposed to borrow.	The number of instalments in which it is proposed that the loan should be taken.	The amount of each instalment.	The date proposed for receiving each.	The number of instalments in which the loan is repayable and the date of payment thereof.	Amount of each instalment.		Rs.	Rs.	Rs.		Rs.	Rs.	Rs.	Rs.
											(a) Municipal rates and taxes—				(1) General administration and collection charges.	8,439	11,973	10,523	
											(1) Tax on holdings or persons.	58,471	54,844	56,788	(2) Public safety ..	5,405	8,251	11,567	8,326
											(2) Water rate ..	28,485	25,815	28,582					
											(3) Latrine fees ..	28,809	27,864	29,710	(3) Public health and convenience (excluding capital outlay on water-supply or drainage, the cost of constructing new roads and buildings, and special expenditure met out of non-recurring grants for donations)—				
											(4) Lighting rate ..								
											(5) Warrant fees ..	144	134	94					
											(6) Tax on animals and vehicles.	810	1,385	1,708	(i) Water-supply (establishment and repairs).	11,897	9,547	10,166	
											(7) Tax on professions and trades.	740	430	435	(ii) Drainage (establishment and repairs).	6,101	5,855	6,725	
											(8) Tax on professions and trades under section 123 (1) (f).	907	2,274	2,323	(iii) Conservancy, etc. (heads 2 to 13 in account form No. 1).	37,669	33,287	41,200	
											(b) Realisations under special Acts.	322	1,596	1,012	(iv) Public works (establishment, repairs and tools and plant).	23,042	16,255	9,921	
											(c) Revenue derived from municipal property and powers apart from taxation (excluding sale-proceeds of land).	5,979	8,002	6,023	(4) Public instruction ..	9,407	9,484	8,473	
											(d) Grants and contribution —recurring.	4,257	4,294	4,862	(5) Contributions—recurring	6,691	6,131	6,020	
											(e) Miscellaneous (Details of individual items exceeding Rs. 1,000 to be furnished in the remarks column).	588	217	275	(6) Miscellaneous' (Individual items exceeding Rs. 1,000 to be detailed in the remarks column).	2,891	3,586	7,148	
															(7) Repayment of loan ..	4,311	2,461	2,622	
															(8) Interest on loan ..	7,527	7,376	7,216	
											Total ordinary income ..	1,30,932	1,24,835	1,31,753	(X) Total ordinary expenditure.	1,20,980	1,19,206	1,21,596	

Sewerage Scheme of the Asansol Municipality	Rs. 1,40,000.	Asansol Muni-	Act XV	Thirty	4 per cent.	In two	(i) 1st instalment— (ii) 2nd instalment—	1st instalment— 2nd instalment—	Repayable in thirty equated annual instalments	Rs. 2,891-8 for (i) and	(f) Extraordinary and debt	65,337	2,667	15,657	(9) Extraordinary and debt excluding repayment of loans.	10,177	[illegible]	16,377
											(g) Receipts of abnormal character—				(10) (i) Capital outlay on—			
											(1) Sale-proceeds of the municipal road watering lorry.	1,998	..	..	(a) Water-supply ..	56,959	..	..
											(2) Grants and contributions (non-recurring or special).	3,348	3,132	3,670	(b) Drainage ..	1,957	1,988	1,070
											(3) Other items ..	..	..	..	(c) Buildings and roads (new works).	1,703	950	9,137
															(d) Markets and slaughter houses.	..	..	3,090
															(ii) Other expenditure from special grants or donations.	1,684	4,804	3,373
															(Y) Total (i) and (ii) ..	62,303	7,742	16,670
															Deduct—Expenditure out of loans, special grants or donations (*vide* Account No. 12).	58,643	4,804	3,373
															Net capital expenditure met out of revenue.	3,660	2,938	13,297
															Total of (X), (9) and (Y) ..	1,93,360	1,30,516	1,54,633
															Closing balance—			
															Special funds—			
															(a) Water ..	342	5,732	
															(b) Lighting ..	..	..	
											Total ..	2,01,215	1,32,154	1,51,089	(c) Latrine ..	5,652	..	7,535†
															Other funds ..	2,356	684	
											Opening balance ..	1,586	9,441	11,079	Revenue Fund ..	1,091	4,663	
											Grand Total ..	2,02,801	1,41,595	1,62,168	Grand Total ..	2,02,801	1,41,595	1,62,168

Remarks— * (6) *Miscellaneous 1935-36.*

The following items under the head exceed Rs. 1,000:—

	Rs.
Printing charges	1,158
Law charges	1,037
Contribution for the commemoration of Their Majesties Silver Jubilee	2,500

†*1935-36.*

Water rate fund	12,000
Other funds	1,079

In addition to the details required on the reverse, clear information should be given below under the following heads:—

(*a*) If the ordinary surplus is insufficient to meet the charges of the proposed loan, the particular steps which the municipality has taken, or has agreed to take, in order to make good the deficiency.

(*a*) The ordinary surplus as arrived at on the basis of the last three years' receipts and expenditure is quite sufficient to pay annual instalments towards repayment of the loan. Apart from this the quinquennial revision of assessment which had effect from 1st April 1935 has increased the demand on account of the three rates by about Rs. 4,000 and a professional tax under section 123(*1*)(*f*) was imposed only about a couple of years hence and the percentage of conservancy rate was increased from 3¾ to 4. The proceeds from these sources are now spent on less important improvements and would be available for payment of loan repayment instalment. There is also saving of about Rs. 1,700 that would be caused on conservancy head by introduction of the Sewerage Scheme. These taken together would be quite enough to meet any deficit in surplus.

(*b*) The reserve of taxation or other possible means of increase in the revenues of the municipality. The rates at which each of the taxes mentioned in column 12 on the reverse are levied, other than tax on persons, should be stated here.

(*b*) The rates at which the taxes mentioned in column 12 on the reverse are levied are as under:—

(*i*) Rate on holdings at 7½ per cent. on the annual value of holdings.

(*ii*) Water-rate at 7 per cent. on the annual value of holdings to which water connections are given and at 6 per cent. in cases of all other holdings which or any part of which are within a radius of 440 yards from the nearest street tank.

(*iii*) Conservancy rate at 4 per cent. on the annual value of holdings.

(*iv*) Taxes on carriages and animals at the following rates:—

Description.	Tax per half-year. Rs. A.
(*a*) On every jin rickshaw ..	2 0
(*b*) On every 4-wheeled carriage drawn by two horses ..	4 8
(*c*) On every 4-wheeled carriage drawn by one horse or a pair of ponies	3 0
(*d*) On every 2-wheeled carriage ..	2 8
(*e*) On every horse	3 0
(*f*) On every pony under thirteen hands and on every mule or donkey	0 12
(*g*) On every elephant	6 0
(*h*) On every camel	2 0
(*i*) On every 4-wheeled carriage drawn by one pony under thirteen hands	2 0

(*v*) Tax on professions and trades (dangerous and offensive trades):—

	Rs.
Bone depot	25
Hide depot	25
Lime kiln	10
Wood depot	25
Brick kiln	40

(*vi*) Tax on professions, etc., under section 123(*1*) (*f*) of the Act at half the rates specified in Schedule IV of the Bengal Municipal Act, 1932.

There is still room for increasing the percentage of the holding, water and conservency rates by respectively 2½ per cent., 1½ per cent. and 3 per cent. Moreover, this Board has since all the streets and lanes of the town electrically lighted without imposing lighting rate and they can if necessity is felt impose a lighting rate too.

(*c*) A statement of all outstanding loans specifying in respect of each loan, the date when taken, the purpose (very briefly), the amount, the annual charges involved, and the amount still payable.

(*d*) Any explanations in regard to receipts and expenditure to show the true financial position of the municipality when such position is otherwise than the ordinary surplus would indicate.

(*c*) Only a sum of Rs. 1,08,397-13 is outstanding to this date against a loan of Rs. 1,20,000 taken from Government (*vide* Government Order No. 3074P.H., dated the 25th November 1930) at an interest of Rs. 6½ per cent. for the Asansol Water Supply Scheme. The loan is repayable in twenty-five annual instalments of Rs. 9,837-12 payable on the 1st December every year. Five instalments have already been paid on due dates. This loan charge is met from Water-works Fund and no other loans are outstanding.

G. S. DUTT,
Secy. to the Govt. of Bengal.

EDUCATION DEPARTMENT.

NOTIFICATIONS.

Minister-in-charge: The Hon'ble Khan Bahadur M. Azizul Haque.

Rajshahi. — No. 2558Edn. — 4th August 1936.—The Government of Bengal (Ministry of Education) are pleased to appoint the following persons to constitute the Governing Body of the Rajshahi Madrasah:—

The District Magistrate, Rajshahi—President (*ex-officio*).

The Principal, Rajshahi College—Member (*ex-officio*).

Maulvi Serajul Islam, Professor, Rajshahi College.

Maulvi Mirza Md. Yakub—Representative of parents and guardians.

Khan Bahadur Maulvi Emaduddin Ahmad, M.L.C., from 1st January to 7th May 1936—Representative of parents and guardians.

Maulvi Mobarak Ali Khan, B.L., from 8th May 1936—Representative of parents and guardians.

Dr. Mansurar Rahman, M.B., Assistant Surgeon, Sadar Hospital, Rajshahi.

An elected representative of the teaching staff of the Madrasah, approved by the Director of Public Instruction, Bengal.

The Superintendent, Rajshahi Madrasah—Secretary (*ex-officio*).

2. The elected representative of the teaching staff will hold office for one year only, viz., 1936, and the rest for three years from 1936.

Dacca.—No. 2563Edn.—4th August 1936.—Babu Aswini Kumar Dutta, Professor, Teachers' Training College, Dacca, is allowed leave on half average pay, on medical certificate, up to the 23rd December 1936, under rule 81(*d*) of the Fundamental Rules, in extension of the leave already granted to him in terms of notification No. 235T. Edn., dated the 6th May 1936.

Rajshahi-Calcutta. — No. 2595Edn. — 5th August 1936.—Babu Tarak Nath Sen, officiating Professor of English, Rajshahi College, is appointed to act in the Bengal Educational Service as Professor of English, Presidency College, Calcutta, with effect from the 1st August 1936, or any subsequent date on which he joins the appointment, *vice* Mr. Somnath Maitra, on leave, or until further orders.

Rajshahi. — No. 2596Edn. — 5th August 1936.—Babu Sourindra Nath Majumdar, Lecturer in English, Rajshahi College, in the Subordinate Educational Service, is appointed to act in the Bengal Educational Service as Professor of English in that College, with effect from the 1st August 1936, or any subsequent date on which he assumes charge, *vice* Babu Girija Shankar Bhattacharji, on deputation, or until further orders.

Calcutta.—No. 2664Edn.—8th August 1936.—Maulvi A. S. M. Iyyub is appointed to act in the Bengal Educational Service as a Professor of Philosophy, Presidency College, Calcutta, with effect from 6th July 1936, during the absence, on leave, of Dr. Mahendra Nath Sarkar, or until further orders.

Howrah. — No. 2666Edn. — 10th August 1936.—Mr. C. R. Copeland, Instructor in Mechanical Engineering, Bengal Engineering College, is appointed to act as Secretary to the Board of School Final Examination, Science Side, and Inspector of School Final Science Classes, in this province, for the period from the 6th August to 1st November 1936, *vice* Mr. A Macdonald, on leave.

Howrah. — No. 2667Edn. — 10th August 1936.—Mr. R. Wolfenden of the Indian Educational Service is appointed to act as Secretary to the Board of School Final Examination, Science Side, and Inspector of School Final Science Classes, in this province, with effect from the 2nd November 1936, when he takes over charge of the appointment of Principal, Bengal Engineering College.

Registration.

NOTIFICATIONS.

Minister-in-charge: The Hon'ble Khan Bahadur M. Azizul Haque.

No. 505Regn.—8th August 1936.—In exercise of the power conferred by sub-section (*1*) of section 69 of the Indian Registration Act, 1908 (XVI of 1908), and with the previous approval of the Government of Bengal (Ministry of Education), the Inspector-General of Registration makes the following amendment in the Bengal Registration Rules, 1927, published under notification No. 880-Regn., dated the 1st April 1927:—

Amendment.

For rule 13 of the said rules *substitute* the following, namely:—

"13. The books and indexes of the General Registry office under Act XVI of 1864 and Act XX of 1866, with the exception of the abstracts of instruments received and entered in register books under section 42 and the memoranda of decrees and orders referred to in section 45 of Act XVI of 1864, and the copies of Indexes I and II received and filed under section 63 of Act XX of 1866 up to the year 1888, shall be preserved in the Calcutta Registry Office."

No. 507Regn.—8th August 1936.—In exercise of the power conferred by sub-section (*1*) of section 3 of the Destruction of Records Act, 1917 (V of 1917), and with the previous approval of the Government of Bengal (Ministry of Education), the Inspector-General of Registration, Bengal, makes the following amendment in rule 2 of the rules published under notification No. 2220Regn., dated the 31st August 1927, as amended by notification No. 194Regn., dated 17th March 1936:—

Amendment.

At the end of rule 2 of the said rules *add* the following:—

"*Records to be no longer preserved.*

The abstracts of instruments received and entered in register books under section 42 and the memoranda of decrees and orders referred to in section 45 of Act XVI of 1864, and the copies of Indexes I and II received and filed under section 63 of Act XX of 1866 up to the year 1888 and at present preserved in the Calcutta Registry Office.

These records shall be destroyed or otherwise disposed of after three months from the date of this notification."

H. GRAHAM,
Secy. to the Govt. of Bengal.

Orders by the Director of Public Instruction, Bengal.

Bengal Educational Service.

Nadia.—No. 35B.—7th July 1936. — Babu Bibhuti Bhusan Sen, Professor of Mathematics, Krishnagar College, in the Bengal Educational Service, is granted leave on average pay for nine days from 2nd July 1936, under Fundamental Rules 81(*b*)(*ii*) and 82 (*b*).

Pabna.—No. 39B.—18th July 1936.—Maulvi Sadaruddin Ahmed, Head Master, Pabna Zilla School, in the Bengal Educational Service, is declared to have been on commuted furlough, on medical certificate, on average pay for sixteen days, under article 325A of the Civil Service Regulations, with effect from 27th April 1936.

J. M. BOTTOMLEY,
Director of Public Instrn., Bengal.

Orders by the Inspector-General of Registration, Bengal.

Chittagong.—No. 460.—6th August 1936. —Maulvi Md. Nurul Huq, Sub-Registrar of Boalkhali, in the district of Chittagong, is allowed leave on average pay for two months, under rule 81 (*b*) (*ii*) of the Fundamental Rules, with effect from the date on which he may be relieved.

Chittagong.—No. 461.—6th August 1936.—Mr. J. D. Morieno, Sadar Joint Sub-Registrar, Chittagong, is appointed to act, until further orders, as Sub-Registrar of Boalkhali in the same district, with effect from the date on which he joins the appointment, during the absence, on leave, of the permanent incumbent.

Chittagong.—No. 462.—6th August 1936.—Babu Nagendra Chandra Sen, Sub-Registrar of Cox's Bazar, in the district of Chittagong, is allowed leave on average pay for three weeks, under rule 81 (*b*) (*ii*) of the Fundamental Rules, with effect from the 23rd July 1936.

Nadia-Pabna-Dinajpur.—No. 463. — 6th August 1936.—Maulvi Hakimuddin Ahmad, Sub-Registrar of Mirpur, in the district of Nadia, is appointed to be Sub-Registrar of Bhangura, in the district of Pabna. This cancels this department notification No. 433, dated 23rd July 1936, appointing him to be Sub-Registrar of Gangarampur, in the district of Dinajpur.

Pabna-Rajshahi.—No. 464.—6th August 1936.—Maulvi Md. Rafiuddin, Sub-Registrar of Bhangura, in the district of Pabna, is appointed to be Sub-Registrar of Mahadebpur, in the district of Rajshahi.

Khulna.—No. 465.—7th August 1936.—Maulvi Ekramul Kabir, probationary Sub-Registrar attached to the Sadar Registration office at Khulna, is allowed leave on medical certificate for three weeks, under rule 16 of the Bengal Services (Revision of Leave) Rules, 1934, in extension of the leave granted to him in this department notification No. 442, dated the 28th July 1936.

Birbhum.—No. 466.—7th August 1936.—Babu Hemanta Kumar Ghosh, Sub-Registrar of Nalhati, in the district of Birbhum, is allowed leave on average pay for thirteen days, under rule 81 (*b*) (*ii*) of the Fundamental Rules, with effect from the 3rd August 1936.

Birbhum.—No. 467.—7th August 1936.—Babu Sachindra Nath Ray, probationary Sub-Registrar attached to the Sadar Registration office at Suri, in the district of Birbhum, is appointed to act as Sub-Registrar of Nalhati in the same district, with effect from the 3rd August 1936, during the absence, on leave, of Babu Hemanta Kumar Ghosh, Sub-Registrar, or until further orders.

Chittagong.—No. 468.—7th August 1936.—Maulvi A. F. M. Fazlul Karim, 2nd Joint Sub-Registrar of Fatikchari at Kazirhat in the district of Chittagong, is allowed leave on average pay for two months, under rule 81 (*b*) (*ii*) of the Fundamental Rules, with effect from the 24th July 1936.

Noakhali-Chittagong. — No. 469. — 7th August 1936.—Maulvi Abdus Salam, probationary Sub-Registrar attached to the Sadar Registration office at Noakhali, is appointed to act as the 2nd Joint Sub-Registrar of Fatikchari at Kazirhat, in the district of Chittagong, with effect from the 24th July 1936, during the absence, on leave, of the permanent incumbent, or until further orders.

Nadia-Rajshahi.—No. 470.—7th August 1936.—Babu Manindra Kumar Maitra, officiating Sub-Registrar of Shikarpur, in the district of Nadia, is appointed to act as Sub-Registrar of Atrai, in the district of Rajshahi, during the absence, on leave, of the permanent incumbent, or until further orders.

S. CHATTERJEA,
Inspector-General of Regn., Bengal.

FINANCE DEPARTMENT.

Audit.

ADDENDA AND CORRIGENDA.

No. 6601F.—8th August 1936.—The following corrections, which have been authorised, are published for general information:—

Fundamental and Subsidiary Rules, 1st Edition (Reprint), 1929.

Page 295—Appendix No. 17.—Insert the following as an additional item under the head "Agriculture":—

"Assistant Director of Agriculture—Farm Superintendent of the Burirhat (Rangpur) Tobacco Farm and the Establishment subordinate to him".

Bengal Financial Rules, 1st Edition (Reprint), 1930.

Page 265—F. R. Appendix 16 as amended by correction slip No. 231, dated the 2nd December 1933.—Substitute the following for the first sentence in rule III as amended by corrigendum No. 4849F., dated the 22nd July 1935, published in the *Calcutta Gazette*, dated the 25th July 1935:—

"Heads of departments should submit annually to the Principal Auditors concerned statements showing the remissions of revenue and abandonments of claims to revenue sanctioned during the preceding year by the competent authorities in exercise of the discretionary powers vested in them otherwise than by law or rule having the force of law".

Page 70—Rule 218A as inserted by correction slip No. 67, dated the 17th May 1930.—Delete the words "and also" occurring in

line 3 of the first sentence in sub-paragraph 2 of this rule and *insert* the following at the end of this sentence:—

"and also to the page number of the measurement book".

Page 131—S. R. 35 under T. O. 16.—Substitute the following for note 2(*v*) under clause (*f*) as inserted by correction slip No. 287:—

(*v*) The Superintendent of the Burirhat (Rangpur) Tobacco Farm "for" the Assistant Director of Agriculture his own pay bills and those of his subordinates on the understanding that the responsibility for any irregularity will continue with the Assistant Director of Agriculture.

Pages 358-359—T. O. Appendix I, 34 Agriculture (Transferred).—Insert the following as an additional entry in the column "Remarks" against the sub-head "Experimental Farms":—

Assistant Director of Agriculture is the controlling officer for countersignature of travelling allowance bills of the Farm Superintendent, Burirhat (Rangpur) Tobacco Farm, and the establishment subordinate to him.

Page 388—T. O. Form No. 9.—Insert the following as certificate No. 4:—

"(*4*) Certified that all inferior servants whose pay has been charged in this bill were actually entertained in Government service during the period concerned."

Page 373—T. O. Form No. 1A as inserted by correction slip No. 306, dated the 4th December 1935.—Substitute the following for item 5 of the "Directions for note" on the reverse of the form:—

"5. All pay bills are paid by cheques issued on, or enfaced for payment direct at, the Reserve or Imperial Bank of India if the amount exceeds Rs. 20 or paid in cash if the amount is not more than Rs. 20."

E. N. BLANDY,

Secy. to the Govt. of Bengal.

COMMERCE DEPARTMENT.

NOTIFICATIONS.

No. 5441Com.—5th August 1936.—In exercise of the power conferred by section 32 of the Factories Act, 1934 (XXV of 1934), the Governor in Council is pleased to make the following rule, viz.—

Rule.

After rule 75 of the Bengal Factories Rules, 1935, published under notification No. 10844-Com., dated the 22nd November 1935, the following rule shall be inserted as rule 75A, viz.—

75A. For the purposes of sub-section (*2*) of section 31, the following industries shall be represented by the body or association noted against each:—

(1) Tea Factories—Indian Tea Association.

(2) Jute Mills—Indian Jute Mills Association.

(3) Jute Presses—Calcutta Hydraulic Press Association.

(4) Engineering Works—Indian Engineering Association.

(5) Paper Mills—Indian Paper Makers Association.

(6) Sugar Mills—Indian Sugar Mills Association.

(7) Any other industry—Such body as the Board of Appeal may decide in each particular case.

No. 5582Com.—10th August 1936. — In exercise of the powers conferred by sub-section (*4*) of section 4 of the Bengal Smoke-nuisances Act, 1905 (Bengal Act III of 1905), and in continuation of notification No. 4234Com., dated the 19th June 1936, the Governor in Council is pleased to appoint Councillor Mohamed Ali Khan of 32/1, Ekbalpore Road, Alipur, who has been nominated by the Corporation of Calcutta, to be a member of Bengal Smoke-nuisances Commission as constituted under this Government notification No. 4233Com., dated the 19th June 1936, for a period of one year.

Certificate of Approval.

No. 5377Com.—4th August 1936.—With reference to rule 7 of the rules issued by the Government of India with their resolution No. 7552—7581-121, dated the 15th September 1913, for regulating the grant by Local Governments of licences to prospect for minerals and the grant of mining leases in British India, it is hereby certified that Babu Ramnath Seksaria of 7, Lyons Range, Calcutta, is approved by the Government of Bengal as a fit and proper person to whom such licences or leases can be granted in the Presidency of Bengal.

2. Under rule 8 of the aforesaid rules this certificate will expire at midnight on the 31st of December 1936.

E. N. BLANDY,

Secy. to the Govt. of Bengal.

Orders by the Registrar of Joint Stock Companies, Bengal.

Calcutta, the 4th August 1936.

In the matter of the Indian Companies Act, 1913 (VII of 1913), and in the matter of Madhupur Tea Co., Ltd.

Notice is hereby given that, on the expiration of three months from date, the name of Madhupur Tea Co., Ltd., will, unless cause is shown to the contrary, be struck off the register, and the company will be dissolved.

In the matter of the Indian Companies Act, 1913 (VII of 1913), and in the matter of Bose Mitter & Co. (Engineers), Ltd.

Notice is hereby given that, on the expiration of three months from date, the name of Bose Mitter & Co. (Engineers), Ltd., will, unless cause is shown to the contrary, be struck off the register, and the company will be dissolved.

In the matter of the Indian Companies Act, 1913 (VII of 1913), and in the matter of Road Makers, Ltd.

Notice is hereby given that, on the expiration of three months from date, the name of Road Makers, Ltd., will, unless cause is shown to the contrary, be struck off the register, and the company will be dissolved.

In the matter of the Indian Companies Act, 1913 (VII of 1913), and in the matter of Mymensingh Banking and Trading Corporation, Ltd.

Notice is hereby given that, on the expiration of three months from date, the name of Mymensingh Banking and Trading Corporation, Ltd., will, unless cause is shown to the contrary, be struck off the register, and the company will be dissolved.

N. K. MAJUMDER,

Registrar of Companies under Act VII of 1913.

Calcutta, the 4th August 1936.

In the matter of the Indian Companies Act, 1913 (VII of 1913), and in the matter of Bimala Agency, Ltd.

Notice is hereby given that the name of Bimala Agency, Ltd., has this day, in pursuance of section 247 of the Act, been struck off the register and that the company is dissolved.

N. K. MAJUMDER,

Registrar, Joint Stock Companies.

MARINE DEPARTMENT.

NOTIFICATIONS.

No. 22Mne.—5th August 1936.—In exercise of the power conferred by clause (*h*) of sub-section (2) of section 52 read with section 73 of the Inland Steam-vessels Act, 1917 (I of 1917), the Governor in Council is pleased to make the following rule for regulating the towing of vessels containing passengers by inland steam or motor vessels :—

Rule.

No vessel carrying more than twelve passengers shall be towed by an inland steam or motor vessel in inland waters outside the limits of the port of Calcutta unless a permit in the following form over the signature of the Principal Engineer and Ship Surveyor, Calcutta, or the Engineer and Ship Surveyor, Chittagong, has been issued in respect of such vessel.

If the master or serang of any inland steam or motor vessel commits a breach of this rule he shall be punished with imprisonment for a term which may extend to six months, or with fine which may extend to five hundred rupees, or with both :—

Permit.

This permit is granted for the purpose of the rule published under notification No. 22Mne., dated 5th August 1936, in respect of flat/barge No.

The maximum number of passengers that may be conveyed in this is :—

Smooth water only.		Smooth and partially smooth water.	
By day.	By night.	By day.	By night.

The following equipment shall be carried and shall be maintained in serviceable condition :—

(*a*) Life buoys.

(*b*) Fire buckets.

(*c*) Drinking water tanks.

(*d*) Latrine accommodation.

This permit unless previously cancelled shall be valid until

No. 23Mne.—8th August 1936.—It is hereby notified under the provisions of sections 6 and 15 of the Calcutta Port Act, 1890, that Dr. Satya Churn Law, ph.d., has been elected by the Bengal National Chamber of Commerce to be a Commissioner for the Port of Calcutta, *vice* Mr. Nalini Ranjan Sarkar, a Port Commissioner, who has been granted permission to be absent from the Commissioners' meeting for four months with effect from the 20th July 1936.

E. N. BLANDY,

Secy. to the Govt. of Bengal.

PUBLIC WORKS DEPARTMENT.

Communications.

NOTIFICATIONS.

Minister-in-charge: The Hon'ble Nawab Sir Mohiuddin Faroqui, Kt., of Ratanpur.

No. 10C.—5th August 1936.—In exercise of the power conferred by section 19 of the Howrah Bridge Act, 1926 (Ben. Act IV of 1926), the Government of Bengal (Ministry of Public Works) are pleased to make the following amendments in the rules governing the disqualifications and duties of the Commissioners of the New Howrah Bridge and other matters published under notification No. 3C., dated the 10th August 1928, namely :—

Amendments.

(1) Before rule 1 of the said rules *insert* the following rule :—

"1A. The Chairman and the Deputy Chairman for the time being of the Commissioners for the Port of Calcutta shall respectively be the Chairman and the Deputy Chairman of the Commissioners for the New Howrah Bridge".

(2) After rule 20 of the said rules *insert* the following rule, namely :—

"20A. Every bond forming part of a series of bonds issued in respect of any loan raised under section 6 and every contract or agreement exceeding the sum of one thousand rupees in value shall be signed by the Chairman or the Deputy Chairman and by at least two other Commissioners and shall be sealed with the common seal of the Commissioners".

No. 9C.—31st July 1936.—The following draft of rules, which the Government of Bengal (Ministry of Public Works) propose to make under section 19, sub-section (*2*) of the Howrah Bridge Act, 1926, for regulating the collection of taxes on passengers under clauses (*iv*) and (*v*) of section 8 of the said Act and the payment thereof to the Commissioners of the New Howrah Bridge, is hereby published for the information of persons likely to be affected thereby.

The draft rule will be taken into consideration on or after 12th September 1936, and any objection or suggestion which may be received by the undersigned before that date will be duly considered:—

Draft rules.

1. The amount of tax leviable under clauses (*iv*) and (*v*) of section 8 of the Act shall be included in the fare shown on the tickets issued by the administrations of the East Indian Railway and the Bengal Nagpur Railway and by the owner of any steam-vessel plying as a ferry within, or partly within and partly without, the limits of the port of Calcutta, to the passengers brought to or carried from the Howrah station on such railways and to passengers carried on such steam-vessels.

2. When a half ticket is issued the tax shall be realised at half rates.

3. A return ticket shall be regarded as a ticket for two single journeys and the tax for both journeys shall be added to the fare of the return ticket.

4. Every such tax collected in any month shall be paid to the Commissioners by the railway administration or the owner of the steam-vessel, as the case may be, within 60 days from the close of that month, after making such deduction therefrom as the Local Government may approve to meet any expenses incurred in connection with the levy and collection of the tax.

5. With each of such remittances, the railway administration or the owner of the steam-vessel shall forward or cause to be forwarded to the Commissioners a statement in Form 1 and Form 2, respectively, annexed hereto.

6. On giving twenty-four hours' notice to either of the aforesaid railway administrations or to the owner of the steam-vessel the Commissioners may depute a person during office hours to examine the books and the returns from which the statement prescribed in rule 5 has been compiled, and the said railway administration or the owner of the steam-vessel shall give facilities to such person to check the figures contained in such statement:

Provided that the said railway administrations and the owner of the steam-vessel shall not be required to preserve any accounts or vouchers for more than one year.

Form 1.

Statement of passenger tax payable to the Commissioners for the New Howrah Bridge for the month of 19 .

Bookings between Howrah Station on one side and all stations in India on the other.	Number of passenger tickets.	
	Single.	Return.
Local outward as per passenger classification		
Local inward as per register		
Foreign outward		
Foreign inward		
GRAND TOTAL ..		
Suburban season tickets—	Number.	
Outward		
Inward		
Total ..		

	Rs. a. p.
....passengers at 3 pies each ..	
....suburban ticket-holders at 4 annas each.	
Total ..	
Deduct—Cost of collection as approved by Government of Bengal ..	
Net amount payable ..	

Declaration.—The above statement is correct to my information and knowledge.

Responsible Officer of the Collecting Agency.

N.B.—A return ticket is to be taken as two tickets for the purpose of calculating the tax.

Form 2.

Statement of passenger tax payable to the Commissioners for the New Howrah Bridge for the month of 19 .

Booking between stations within or partly within and partly outside the Calcutta Port limit.	Number of passenger tickets.			Remarks.
	1st class.	2nd class.	Total.	
To and from stations within the Port of Calcutta.				
To and from stations outside the Port of Calcutta.				
GRAND TOTAL ..				
Season tickets between stations within or partly within and partly outside the Port of Calcutta.				

Tax collected at— Rs.

Half an anna a head on	.. 1st class passenger ..	
3 pies a head on	.. 2nd class passenger ..	
8 annas a head on	.. 1st class season ticket-holders.	
4 annas a head on	.. 2nd class season ticket-holders.	
	Total ..	

Declaration.—The above statement is correct to my information and knowledge.

Responsible Officer of the Collecting Agency.

N.B.—A return ticket is to be taken as two tickets for the purpose of calculating the tax.

H. S. E. STEVENS,
Secretary to the Government of Bengal.

DEPARTMENT OF AGRICULTURE AND INDUSTRIES.

Forests.

NOTIFICATION.

Dacca-Mymensingh Divn. — No. 1002For. —3rd August 1936.—Dewan Bahadur Mahim Chandra Choudhuri, Extra Assistant Conservator of Forests, Bengal, is allowed leave on half average pay for the period from 1st August 1936 to 11th September 1937, under rule 81 (*d*) of the Fundamental Rules, in extension of the leave granted to him in notification No. 14T.For., dated the 18th May 1936.

H. S. E. STEVENS,
Secy. to the Govt. of Bengal.

REVENUE DEPARTMENT.

Land Revenue.

NOTIFICATIONS.

Burdwan-Hooghly. — No. 11404L.R. — 7th August 1936.—Babu Suresh Chandra Ghosh, No. I, Sub-Deputy Collector and Assistant Settlement Officer, Burdwan-Hooghly, is allowed leave on average pay from the 10th September 1936 or any subsequent date up to the 9th January 1937, under rule 81 (*b*) (*ii*) of the Fundamental Rules.

Howrah - Midnapore - Bankura - 24 - Parganas-Khulna-Bogra.—No. 11495L.R. — 8th August 1936. - Maulvi Ashraf Ali, Kanungo, now on deputation in Relief Work in the district of 24-Parganas, is, in the interest of public service, appointed to be the Technical Adviser to the Settlement Officer, Howrah, and Land Revenue Settlement Officer, Western Circle, Midnapore, Bankura, 24-Parganas Khulna and Bogra, with effect from the date on which he joins his settlement duties in those districts.

Howrah - Midnapore - Bankura - 24 - Parganas-Khulna-Bogra.—No. 11496L.R. — 8th August 1936.—Under the provisions of section 3(*14*) of the Bengal Tenancy Act, 1885 (Act VIII of 1885), Maulvi Ashraf Ali, Settlement Kanungo and Technical Adviser to the Settlement Officer, Howrah, and Land Revenue Settlement Officer, Western Circle, Midnapore, Bankura, 24-Parganas, Khulna and Bogra, is authorised to discharge, in those districts, the functions of a Revenue Officer, under Chapter X of that Act, so far as they relate to surveys and the preparation of record-of-rights.

He is also vested with the powers of an Assistant Settlement Officer, under Chapter VII, Part I, of the rules under the Bengal Tenancy Act, in respect of the aforesaid areas.

Bakarganj.—No. 11545L.R.—10th August 1936.—Under the provisions of section 3 (*14*) of the Bengal Tenancy Act, 1885 (Act VIII of 1885), Maulvi Bajlul Huq Chaudhuri, Settlement Kanungo, is authorised to discharge, in the district of Bakarganj, the functions of a Revenue Officer, under Chapter X of that Act, so far as they relate to surveys and the preparation of record-of-rights.

Bakarganj.—No. 11546L.R.—10th August 1936.—In exercise of the powers conferred by section 3 of the Bengal Land Revenue Settlement Regulation, 1825 (IX of 1825), read with section 20 of the Bengal Land Revenue Settlement Regulation, 1822 (VII of 1822), the Governor in Council is pleased to vest Maulvi Bajlul Huq Choudhuri, Settlement Kanungo, who has, by notification No. 10734-C.P., dated the 3rd August 1936, been vested by the Board of Revenue with the powers of a Collector in the estates of Maulvi Majub Ali Choudhuri and the estate of Babu Narendra Nath Mittra in the district of Bakarganj, for the purpose of the work of maintenance of the record-of-rights of those estates with powers under section 19 of the said Bengal Land Revenue Settlement Regulation, 1822, within the local limits of those estates, to require and compel persons mentioned in the section to attend and produce accounts and other papers and to examine such persons under that section for the purpose of the said work of the maintenance of the record-of-rights.

Noakhali. — No. 11550L.R.—10th August 1936.—In exercise of the power conferred by sub-section (*3*) of section 158A of the Bengal Tenancy Act, 1885 (Act VIII of 1885), the Governor in Council is pleased to appoint, for the purpose of that section, Babu Bir Chandra Mukherjee, Sub-Deputy Collector, to perform the functions of a certificate officer under the Bengal Public Demands Recovery Act, 1913, for the recovery of arrears of rent (including cesses) due to the estate of Babu Prasanna Kumar Mazumdar and others situated in the district of Noakhali.

Bogra-24-Parganas.—No. 11553L.R.—10th August 1936.—Babu Prafulla Chandra Banerji, Sub-Deputy Collector, now employed as Manager, Jaipur Government Estates, Bogra, is, in the interest of public service, appointed to be the Colonisation Officer, 24-Parganas, with effect from the date on which he takes over charge of his duties in the latter post, *vice* Babu Subodh Chandra Das Gupta, Sub-Deputy Collector, reverted to general line.

24-Parganas-Bogra.—No. 11556L.R.—10th August 1936.—Babu Satyendra Nath Das Gupta, Sub-Deputy Collector, Alipore, 24-Parganas, is, in the interest of public service, appointed to be the Manager, Jaipur Government Estates, Bogra, with effect from the date on which he takes over charge of his duties, *vice* Babu Prafulla Chandra Banerji, Sub-Deputy Collector, transferred.

ERRATA.

No. 11353L.R. — 6th August 1936. — In notification No. 10097L.R., dated the 14th July 1936, at page 1824 of Part I of *Calcutta Gazette* of 30th July 1936, under the Tetulia Debt Settlement Board, *read* "3. Babu Tengnu Saha" *for* "3. Babu Tengner Saha" and under the Pochagarh Debt Settlement Board, *read* "1. Maulvi Masiruddin Muhammad, Member and Chairman" *for* "1. Maulvi Muhammad Nasiruddin, Member and Chairman."

No. 11385L.R.—7th August 1936.—In rule 131 of the Bengal Agricultural Debtors Rules, 1936, published under notification No. 10420-L.R., dated the 20th July 1936, at pages 1762-1763 of Part I of *Calcutta Gazette* of 23rd July 1936, *read* "30th September" *for* "31st October."

Land Acquisition.

NOTIFICATIONS.

Rangpur.—No. 11390L.A. — 7th August 1936.—Rai Sahib Surendra Nath Roy, Sadar Subdivisional Officer, Rangpur, is vested with the powers of a Collector under the Land Acquisition Act, I of 1894, in that subdivision.

Dacca.—No. 11392L.A.—7th August 1936. —Whereas it appears to the Governor in Council that land is likely to be required to be taken by Government at the expense of the Khilgaon union board for a public purpose, viz., for the construction of a pucca bridge over the khal in the mahalla of Hatkhola for connecting the Ram Krishna Mission Road with the Munshi Alimuddin Bhuia Road in the mahalla of Hatkhola, Ward No. 3, thana Sutrapur, pargana Chandrapratap Khalsha, district Dacca, it is hereby notified that for the above purpose a piece of land comprising part of cadastral plot No. 33 and measuring, more or less, 0·0196 of an acre, is likely to be required within the aforesaid mahalla of Hatkhola.

This notification is made, under the provisions of section 4 of Act I of 1894, to all whom it may concern.

A plan of the land may be inspected in the office of the Collector of Dacca.

In exercise of the powers conferred by the aforesaid section, the Governor in Council is pleased to authorise the officers for the time being engaged in the undertaking, with their servants and workmen, to enter upon and survey the land and do all other acts required or permitted by that section.

Any person interested in the above land, who has any objection to the acquisition thereof, may, within thirty days after the date on which public notice of the substance of this notification is given in the locality, file an objection in writing before the Collector of Dacca.

Hooghly.—No. 11395L.A.—7th August 1936.—Whereas it appears to the Governor in Council that land is likely to be required to be taken by Government at the public expense for a public purpose, viz., for closing breaches by ring bunds in the 48th and 49th miles of the Damodar left embankment, in the villages of Nischintapur and Chaitanbati, jurisdiction list Nos. 50 and 49, thana Dhaniakhali, parganas Balighari and Choumaha, respectively, district Hooghly, it is hereby notified that for the above purpose a piece of land comprising cadastral plots Nos. 62, 63, 64, 65, 66, 68, 69, 70, 71, 72, 105, 111, 112, 113, 114, 115, 116, 117, 118, 119, 120, 121, 122, 123, 124, 125, 126, 127, 128, 129, 130, 131, 132, 133, 134, 135, 136, 137, 138, 139, 140, 141, 142, 143, 144, 145, 146, 147, 149, 150, 152, 311, 318 and portions of cadastral plots Nos. 67, 73, 77, 107, 110, 151 and 153 situated in mauza Nischintapur and also cadastral plots Nos. 863, 864 with portions of cadastral plots Nos. 849, 850, 851, 854, 858, 859, 861, 862, 964, 965 and 943 situated in mauza Chaitanbati, and measuring, more or less, 19·25 acres, is likely to be required within the aforesaid villages of Nischintapur and Chaitanbati.

This notification is made, under the provisions of section 4 of Act I of 1894, to all whom it may concern.

A plan of the land may be inspected in the office of the Land Acquisition Officer, Hooghly.

In exercise of the powers conferred by the aforesaid section, the Governor in Council is pleased to authorise the officers for the time being engaged in the undertaking, with their servants and workmen, to enter upon and survey the land and do all other acts required or permitted by that section.

Any person interested in the above land, who has any objection to the acquisition thereof, may, within thirty days after the date on which public notice of the substance of this notification is given in the locality, file an objection in writing before the Collector of Hooghly.

Burdwan.—No. 11398L.A. — 7th August 1936.—Whereas it appears to the Governor in Council that land is likely to be required to be taken by Government at the public expense for a public purpose, viz., for closing breaches in the Damodar left embankment in the 7th and 11th miles, in the villages of Mithapur, Sonda and Dadpur, jurisdiction list Nos. 115, 116 and 123, respectively, thana Galsi, pargana Bagha, district Burdwan, it is hereby notified that for the above purpose three pieces of land comprising cadastral survey plots in Block "A" No. 2605, and parts of cadastral survey plots Nos. 2593-2595, 2597, 2598, 2600-2604, 2606-2609, 2613, 2614, 2618 and 2619 in mauza Mithapur and parts of cadastral survey plots Nos. 761, 777, 792-798, 800, 807-814, 823, 824, 829-833, 865-871 and 873-875 in mauza Sonda; in Block "B" No. 2188 and parts of cadastral survey plots Nos. 1924, 1926, 1927, 1930-1934, 1936, 1940-1951, 1966-1971, 2184, 2185, 2189 and 2190 in mauza Dadpur; and in Block "C" parts of cadastral survey plot No. 1976 in mauza Dadpur, and altogether measuring, more or less, 7·84 acres, are likely to be required within the aforesaid villages of Mithapur, Sonda and Dadpur.

This notification is made, under the provisions of section 4 of Act I of 1894, to all whom it may concern.

A plan of the land may be inspected in the office of the Special Land Acquisition Officer, Burdwan, as well as in that of the Executive Engineer, Damodar Division, Calcutta.

In exercise of the powers conferred by the aforesaid section, the Governor in Council is pleased to authorise the officers for the time being engaged in the undertaking, with their servants and workmen, to enter upon and survey the land and do all other acts required or permitted by that section.

Any person interested in the above land, who has any objection to the acquisition thereof, may, within thirty days after the date on which public notice of the substance of this notification is given in the locality, file an objection in writing before the Collector of Burdwan.

Birbhum.—No. 11401L.A. — 7th August 1936.—Whereas it appears to the Governor in Council that land is likely to be required to be taken by Government partly at the public expense and partly at the expense of Rampurhat High English School Committee for a public purpose, viz., for extending boarding house compound of Rampurhat High English School, in the village of Rampurhat, jurisdiction list No. 77, thana Rampurhat, pargana Kumarprotap, district Birbhum, it is hereby notified that for the above purpose a piece of land comprising portions of cadastral plots Nos. 1533 and 1527 and entire plots Nos. 1531, 1535, 1536, 1537, 1530, 1531, 1532, 1529, 1926 and 1921, and measuring, more or less, 5·02 acres, is likely to be required within the aforesaid village of Rampurhat.

This notification is made, under the provisions of section 4 of Act I of 1894, to all whom it may concern.

A plan of the land may be inspected in the office of the Land Acquisition Officer of Rampurhat.

In exercise of the powers conferred by the aforesaid section, the Governor in Council is pleased to authorise the officers for the time being engaged in the undertaking, with their servants and workmen, to enter upon and survey the land and do all other acts required or permitted by that section.

Any person interested in the above land, who has any objection to the acquisition thereof, may, within thirty days after the date on which public notice of the substance of this notification is given in the locality, file an objection in writing before the Collector of Birbhum.

Bakarganj.—No. 11408L.A. 7th August 1936.—In exercise of the powers conferred by section 48 (*1*) of the Land Acquisition Act, I of 1894, the Governor in Council is pleased to withdraw from the acquisition of 0·0168 of an acre of land comprising portions of cadastral survey plots Nos. 1722 and 1723 which was declared for acquisition in notification No. 3433L.A. of the 4th March 1935, published under section 6 of the Land Acquisition Act (I of 1894), at page 493, Part I of the *Calcutta Gazette* of the 7th idem, in respect of the acquisition of land required by the Kalaskati union board for the construction of a road from Dudhal to Dhakurkati in the village of Dhakurkati, pargana Saistanagar, zilla Bakarganj.

Dacca.—No. 11414L.A.—7th August 1936.—Whereas it appears to the Governor in Council that land is likely to be required to be taken by Government at the expense of the co-operative society at Ichhapura in the district of Dacca for a public purpose, viz., for the co-operative stores at Ichhapura Bazar in the village of Ichhapura, jurisdiction list No. 166, thana Srinagar, pargana Rokanpur-Tappa Bankhanda, district Dacca, it is hereby notified that for the above purpose a piece of land comprising cadastral survey plot No. 963, and measuring, more or less, 0·0076 of an acre, is likely to be required within the aforesaid village of Ichhapura.

This notification is made, under the provisions of section 4 of Act I of 1894, to all whom it may concern.

A plan of the land may be inspected in the office of the Subdivisional Officer of Munshiganj.

In exercise of the powers conferred by the aforesaid section, the Governor in Council is pleased to authorise the officers for the time being engaged in the undertaking, with their servants and workmen, to enter upon and survey the land and do all other acts required or permitted by that section.

Any person interested in the above land, who has any objection to the acquisition thereof, may, within thirty days after the date on which public notice of the substance of this notification is given in the locality, file an objection in writing before the Subdivisional Officer of Munshiganj.

Jalpaiguri.—No. 11492L.A. — 8th August 1936. Whereas it appears to the Governor in Council that land is likely to be required to be taken by Government partly at the public expense and partly at the expense of the Managing Committee of the Boda High English School for a public purpose, viz., for a game field for the Boda High English School in the village of Baguladangi, pargana Boda, zilla Jalpaiguri, it is hereby notified that for the above purpose a piece of land comprising cadastral plot Nos. 500-02 and parts of plots Nos. 505, 513 and 514 of taluk Baguladangi, and measuring, more or less, 6·80 acres of land, bounded on the—

North—By settlement plot Nos. 513 and 514 of taluk Baguladangi,

East—By settlement plot Nos. 503-05, 509 and 512 of taluk Baguladangi,

South—By taluk Kumarnagar,

West—By settlement plot Nos. 499, 574 and Patharaj river of taluk Baguladangi,

is likely to be required within the aforesaid taluk of Baguladangi.

This notification is made, under the provisions of section 4 of Act I of 1894, to all whom it may concern.

A plan of the land may be inspected in the office of the Deputy Commissioner, Jalpaiguri.

In exercise of the powers conferred by the aforesaid section, the Governor in Council is pleased to authorise the officers for the time

being engaged in the undertaking, with their servants and workmen, to enter upon and survey the land and do all other acts required or permitted by that section.

Any person interested in the above land, who has any objection to the acquisition thereof, may, within thirty days after the date on which public notice of the substance of this notification is given in the locality, file an objection in writing before the Deputy Commissioner, Jalpaiguri.

Bogra. — No. 11498L.A. 8th August 1936.—Whereas it appears to the Governor in Council that land is likely to be required to be taken by Government at the expense of the Gokul union board for a public purpose viz., for an office of the Gokul union board, a charitable dispensary and a public playground, in the village of Gokul, jurisdiction list No. 27, thana Bogra, pargana Shelbarsha, zilla Bogra, it is hereby notified that for the above purpose a piece of land comprising cadastral plot Nos. 1430, 1429, 1427, 1428, 1344, 1345, 1349, 1432, 1343, 1346, 1347, 1431, 1426, 1438, and parts of plot Nos. 1424, 1342 and 1348, and measuring, more or less, 1·98 acres, is likely to be required within the aforesaid village of Gokul.

This notification is made, under the provisions of section 4 of Act I of 1894, to all whom it may concern.

A plan of the land may be inspected in the office of the Collector of Bogra.

In exercise of the powers conferred by the aforesaid section, the Governor in Council is pleased to authorise the officers for the time being engaged in the undertaking, with their servants and workmen, to enter upon and survey the land and do all other acts required or permitted by that section.

Any person interested in the above land, who has any objection to the acquisition thereof may, within thirty days after the date on which public notice of the substance of this notification is given in the locality, file an objection in writing before the Collector of Bogra.

24-Parganas.—No. 11527L.A.—10th August 1936.— In exercise of the powers conferred by section 17, sub-section (*d*) of the Land Acquisition Act, I of 1894, as amended by Act XXXVIII of 1923, the Governor in Council is pleased to direct that the provisions of section 5A of the Act shall not apply to the waste or arable portions of the land specified in notification No. 10263L.A., dated the 15th July 1936, under section 4 of the Act, published at page 1774, Part I of the *Calcutta Gazette* of the 23rd idem, which is required for the proposed siding to the Calcutta Electric Supply Corporation, Ltd., for a new generating station in the village of Mulajore, jurisdiction list No. 18, thana Jagaddal, pargana Havelisahar, district 24-Parganas.

Chittagong.—No. 11544L.A.—10th August 1936.—Whereas it appears to the Governor in Council that land is likely to be required to be taken by Government partly at the public expense and partly at the expense of the authorities of the Abu Torab High English School for a public purpose, viz., for a playground of the Abu Torab High English School and its head master's quarters and Hindu and Muhammadan hostels, etc., in the village of West Mayani, police-station Mirsarai, zilla Chittagong, it is hereby notified that for the above purpose pieces of land comprising the revisional survey plots Nos. 3143, 3142, 3175, 3154, 3145, 3136, 3137, 3139, 3153, 3151, 3156, 3157, 3141, 3140, 3144, 3159, 3152, 3188, 3158, 3146, 3156/4175, 3138, 3171, 3167, 3150, 3155, 3148 and 3174 and altogether measuring, more or less, 4·71 acres, are likely to be required within the aforesaid village of West Mayani.

This notification is made, under the provisions of section 4 of Act I of 1894, to all whom it may concern.

A plan of the land may be inspected in the office of the Collector of Chittagong.

In exercise of the powers conferred by the aforesaid section, the Governor in Council is pleased to authorise the officers for the time being engaged in the undertaking, with their servants and workmen, to enter upon and survey the land and do all other acts required or permitted by that section.

Any person interested in the above land, who has any objection to the acquisition thereof, may, within thirty days after the date on which public notice of the substance of this notification is given in the locality, file an objection in writing before the Collector of Chittagong.

ERRATUM.

Calcutta. — No. 11501L.A. 8th August 1936.—In line 12 of declaration No. 9487L.A., dated the 15th July 1935, published at page 1376, Part I of the *Calcutta Gazette* of the 18th idem, in respect of the acquisition of land required for the reconstruction of the Tollygunge Bridge over Tolly's Nullah in ward No. 27 of the Calcutta Municipality in the city of Calcutta for the expression "0·0041 of an acre" read "0·0039 of an acre."

Excluded Area.

NOTIFICATIONS.

Darjeeling.—No. 11334E.A. 5th August 1936. In exercise of the power conferred by the proviso to sub-section 3 of section 45 of the Bengal Municipal Act, 1932 (Bengal Act XV of 1932), as modified in its application to the district of Darjeeling, the Governor in Council is pleased to appoint Mr. K. Sen, I.C.S., Subdivisional Officer, Kurseong, as Chairman of the Kurseong Municipality, *vice* Mr. W. J. Palmer, I.C.S., resigned.

Darjeeling.—No. 11411E.A.—7th August 1936.—In exercise of the power conferred by section 20 of the Bengal Municipal Act, 1932 (Ben. Act XV of 1932), and in partial modification of this department notification No. 12957E.A., dated the 7th November 1932, the Governor in Council is pleased to direct, after consideration of the views of the Commissioners of the Kurseong Municipality at a meeting, that for the purpose of the election of Commissioners of the said municipality the number of Commissioners to be elected from Ward V shall be two instead of one as specified in column 3 of the table annexed to the said notification.

Excise.

NOTIFICATION.

Minister-in-charge: The Hon'ble Sir Bijoy Prasad Singh Roy, Kt.

No. 780Ex.—4th August 1936.—In exercise of the power conferred by section 27 of the Bengal Excise Act, 1909 (Bengal Act V of 1909), the Government of Bengal (Ministry of Excise) are pleased to direct that for paragraph 26 of notification No. 596 S.R., dated the 30th March 1915, as subsequently amended, the following be *substituted*, namely :—

" 26. Duty is imposed on country spirit at the rates respectively specified below :—

(*a*) when transported from any distillery or excise warehouse in Bengal to the premises of a licensed retail vendor—

Area.	Rate of duty per imperial gallon of the strength of—						
	25° U. P.	30° U. P.	40° U. P.	55° U. P.	60° U. P.	70° U. P.	75° U. P.
BURDWAN.	Rs. a. p.	Rs. a. p.	Rs. a. p.	Rs. a. p.	Rs. a. p.	Rs. a. p.	Rs. a. p.
(*a*) Area supplied by Carew & Co.—Subdivisions of Sadar, Burdwan and Asansol.	7 1 3	..	..	3 5 0	..	..	..
(*b*) Area supplied by D. Waldie & Co.—Subdivisions of Katwa and Kalna.	6 14 3	..	..	3 3 0	..	..	..
BIRBHUM.							
Whole district supplied by Carew & Co.	7 1 3	..	..	3 5 0	..	..	..
BANKURA.							
Whole district except as shown below	7 1 3	..	..	3 5 0	..	0 14 6	..
The portion of the Chatna outpost of thana Bankura lying to the south-west of the Darakeswar river, thana Khatra, its outpost Indpur, thana Raipur and the Taldangra outpost of thana Onda—Supplied by Carew & Co.	7 1 3	..	..	3 5 0	..	0 10 0	..
MIDNAPORE.							
(*a*) Area supplied by Carew & Co.—Subdivisions of Sadar and Jhargram except area as shown in (*a*) (*i*) below—Subdivision of Contai except thana Bhagabanpur, Subdivision of Ghatal except thana Daspur.	7 1 3	..	..	3 5 0	..	..	..
(*i*) Thanas Binpur, Garbetta, Gopiballavpur, Jhargram, Salbani, Kespur and Debra and the portion of the Sadar thana bounded on the north by the metalled road from Salkia to Demuaghata, on the east by Fulsundari Khal and on the south and west by the river Kansabati —Supplied by Carew & Co.	7 1 3	..	..	3 5 0	..	0 10 0	..
(*b*) Area supplied by D. Waldie & Co.—Subdivision of Tamluk, thana Bhagabanpur in Contai subdivision, and thana Daspur in Ghatal subdivision.	6 14 3	..	..	3 3 0	..	..	..
HOOGHLY.							
(*a*) Area supplied by Carew & Co.—Subdivision of Arambagh	7 1 3	..	..	3 5 0	..	..	..
(*b*) Area supplied by D. Waldie & Co.—							
(*i*) Industrial area— Thana Serampore exclusive of the villages of Khalsini, Nabagram, Jugipukur and Mankundu in the Bhadreswar outpost.	12 12 3	..	..	6 1 6	..	..	..
(*ii*) Non-industrial area— Sadar subdivision and Serampore subdivision except area as shown in (*b*) (*i*) above.	6 14 3	..	..	3 3 0	..	..	..
HOWRAH.							
(*a*) Area supplied by Haji Ismail Salt & Sons, Ltd.							
(*i*) Industrial area— Sadar subdivision and thana Bauria of Uluberia subdivision.	13 0 0	..	..	6 4 3	..	..	..
(*ii*) Non-Industrial area— Thana Amta of Uluberia subdivision	7 2 0	..	..	3 5 9	..	..	..
(*b*) Area supplied by D. Waldie & Co.—							
(*i*) Industrial area— Thana Uluberia of Uluberia subdivision	12 12 3	..	..	6 1 6	..	..	..
(*ii*) Non-industrial area— Uluberia subdivision except thana Amta and thana Uluberia.	6 14 3	..	..	3 3 0	..	..	..
24-PARGANAS.							
(*a*) Area supplied by Haji Ismail Salt & Sons, Ltd.							
(*i*) Industrial area— Thanas Metiabruz, Mahestala, Behala, Tollygunge and Budge Budge in Sadar subdivision.	13 0 0	..	..	6 4 3	..	..	..
(*ii*) Non-industrial area— Sadar subdivision except area as shown in (*a*) (*i*) above	7 2 0	..	..	3 5 9	..	..	..
(*b*) Area supplied by D. Waldie & Co.—							
(*i*) Industrial area— Barrackpore subdivision	12 12 3	..	..	6 1 6	..	..	..
(*ii*) Non-industrial area— Subdivisions of Basirhat, Baraset and Diamond Harbour	6 14 3	..	..	3 3 0	..	..	..
CALCUTTA.							
Whole district supplied by Messrs. Haji Ismail Salt & Sons, Ltd.	13 0 0	..	9 10 3	..	..	3 14 9	..
NADIA.							
Whole district supplied by D. Waldie & Co.	6 14 3	..	..	3 3 0	..	..	..

Area.	Rate of duty per imperial gallon of the strength of—						
	25° U. P.	30° U. P.	40° U. P.	55° U. P.	60° U. P.	70° U. P.	75° U. P.
	Rs. a. p.	Rs. a. p.	Rs. a. p.	Rs. a. p.	Rs. a. p.	Rs. a. p.	Rs. a. p.
MURSHIDABAD.							
Whole district supplied by D. Waldie & Co.	6 14 3	..	..	3 3 0	..	..	..
JESSORE.							
Whole district supplied by D. Waldie & Co.	6 14 3	..	..	3 3 0	..	..	..
KHULNA.							
Whole district supplied by D. Waldie & Co.	6 14 3	..	..	3 3 0	..	..	..
DACCA.							
Whole district supplied by D. Waldie & Co.	..	8 7 0	..	..	2 5 9	..	..
MYMENSINGH.							
Whole district supplied by D. Waldie & Co.	..	8 7 0	..	..	2 5 9	..	..
FARIDPUR.							
Whole district supplied by Carew & Co.	..	7 7 9	..	..	2 6 9	..	..
BAKARGANJ.							
Whole district supplied by Carew & Co.	..	7 7 9	..	..	2 6 9	..	..
CHITTAGONG.							
Whole district supplied by Carew & Co., except as shown below	..	7 7 9	..	..	2 6 9	..	..
Thana Fatikchari and part of thana Rangunia, bounded on the east, the north and part of the west by a line drawn from the junction of southern and western boundaries of Kaukhali village, proceeding northwards towards the Hill tracts, passing through the eastern boundary of Ponana village and on the south by a line drawn from the eastern boundary of the thana at the southern extremity of Dhopaghat village through the southern boundary of Sillock and Kaukhali villages—Supplied by Carew & Co.	..	7 7 9	..	..	0 8 6	..	..
NOAKHALI.							
Whole district supplied by Carew & Co.	..	7 7 9	..	..	2 6 9	..	..
TIPPERA.							
(*a*) Area supplied by Carew & Co.—Chandpur subdivision, Sadar subdivision and Brahmanbaria subdivision except area as shown in (*b*) below.	..	7 7 9	..	..	2 6 9	..	..
(*b*) Area supplied by D. Waldie & Co.—Thana Daudkandi in Sadar subdivision and thanas Nabinagar and Bancharampur in Brahmanbaria subdivision.	..	7 4 6	..	..	2 5 9	..	..
RAJSHAHI.							
Whole district supplied by Carew & Co.	..	7 7 9	..	..	2 6 9	..	..
DINAJPUR.							
Whole district supplied by Carew & Co.	..	7 7 9	..	..	2 6 9	..	..
JALPAIGURI.							
Whole district supplied by Carew & Co., except as shown below	..	7 7 9	..	..	2 6 9	..	..
Area served by all shops in the Jalpaiguri district on the east side of the Teesta, including the three shops in British Chit belonging to Jalpaiguri, and bounded on all sides by Cooch-Behar boundary—Supplied by Carew & Co.	..	7 7 9	..	..	2 6 9	..	1 12 3
RANGPUR.							
Whole district supplied by Carew & Co.	..	7 7 9	..	..	2 6 9	..	..
BOGRA.							
Whole district supplied by Carew & Co.	..	7 7 9	..	..	2 6 9	..	..
PABNA.							
Whole district supplied by Carew & Co.	..	7 7 9	..	..	2 6 9	..	..
MALDA.							
Whole district supplied by Carew & Co.	..	7 7 9	..	..	2 6 9	..	..
DARJEELING.							
Whole district supplied by Carew & Co., except as shown below	..	7 15 9	..	..	3 7 3	1 10 6	..
Area served by shops at Siliguri, Ladoma, Sukiapokri, Mirik Panighata, Naxalbari, Khoribari, Phansidewa, Tista Bridge, Kalimpong, Algarah (and at Pedong on hot days)—Supplied by Carew & Co.	..	7 15 9	..	..	3 7 3	1 0 6	..

(*b*) When transported from a distillery or excise warehouse in Bengal to a distillery or excise warehouse at any place referred to in clause (*a*) above.

(*c*) When manufactured in a distillery at any place in Bengal.

(*d*) When imported into any place referred to in clause (*a*) above.

(*e*) When exported from Bengal to any place out of Bengal.

The highest rate imposed by clause (*a*) above in any district through or into which the spirit passes.

The rate imposed by clause (*a*) above on transport to the premises of a licensed retail vendor in such place.

The highest rate imposed by clause (*a*) above in any district through or into which the spirit passes.

The rate imposed under the law in force in such place on imports from Bengal.

J. B. KINDERSLEY,

Secy. to the Govt. of Bengal (offg.).

BOARD OF REVENUE, BENGAL.

NOTIFICATIONS.

Bakarganj.—No. 10734C. P.—3rd August 1936. In exercise of powers conferred by clause (2) of section 8 of the Bengal Land Revenue (Assistant Collectors) Regulation, 1821 (IV of 1821), the Board of Revenue authorises Maulvi Bajlul Huq Choudhuri, Settlement Kanungo, who has been placed on duty in connection with the maintenance, for the purposes of section 158A of the Bengal Tenancy Act, 1885, of the record-of-rights of the estates of Maulvi Majub Ali Choudhuri and Babu Narendra Nath Mittra in the district of Bakarganj, to exercise and perform within the local limits of the said estates any of the powers and duties vested in the Collectors of Land Revenue under any enactment in force therein for the purpose of the said work of maintenance of the record-of-rights.

No. 10809Bat.—5th August 1936.—In exercise of the powers conferred upon it by section 3, clause (*ii*) (*a*) of the Estates Partition Act, V (B. C.) of 1897, the Board is pleased to vest Mr. J. L. Llewellyn, I.C.S., the Additional District Magistrate of Mymensingh, generally with the powers of a Collector under the said Act.

S. BANERJEE,
Secy. to the Board of Revenue, Bengal.

HIGH COURT NOTICES.

Civil.

The 7th August 1936.

No. 17705A.—Mr. Santi Priya Basu, munsif, under orders of transfer to Howrah, is vested with the powers of a Judge of a Court of Small Causes for the trial of suits cognizable by such a Court up to the value of Rs. 300 within the local limits of the Howrah munsifi.

2. This cancels the Court's notification No. 17119A., dated the 31st July 1936, published at page 1900 of the *Calcutta Gazette* of the 6th August 1936.

English Department—Civil.

The 3rd August 1936.

No. 17335E.—The following rules amending the rules relating to qualifications, admission and certificates, etc., of Pleaders and Mukhtars in courts subordinate to the High Court of Judicature at Fort William in Bengal, made under section 6 of the Legal Practitioners Act, 1879 (XVIII of 1879), is published for general information.

2. The form of application for enrolment as a Pleader or Mukhtar, prescribed by the rules, will come into force with effect from the 1st October 1936:—

Rules.

(CIVIL.)

I. *Cancel* the second sentence in the Note to Rule 935, Chapter 37, Volume I of the Court's Civil Rules and Orders, commencing with the words "All such applications" and ending with the words "with these rules" and *substitute* therefor the following:—

"All such applications will be received by District Judges, or the Chief Judge, Court of Small Causes, Calcutta, as the case may be, on plain paper, except applications for admission as Pleaders or Mukhtars which shall be in High Court Miscellaneous Form No. (M) 14A, and where necessary forwarded to the High Court in accordance with these rules."

II. *Number* the Note to Rule 935 *ibid*, as Note 1.

III. *Insert* the following as Note 2 to Rule 935 *ibid*:—

"*Note 2.*—Copies of the High Court Miscellaneous Form No. (M) 14A which has been priced at one anna per copy will be available on payment, from the Nazir or any other officer who may be appointed by the District Judge, Chief Judge, Court of Small Causes, Calcutta, or the Commissioner, Surma Valley and Hill Division, for the purpose."

IV. *Insert* the following after entry No. (M) 184 (old) and (M) 14 (new) in Appendix A, Part VI Miscellaneous, at page 24, Volume II of the Court's Civil Rules and Orders:—

	(M) 14A	Application for admission as a Pleader or Mukhtar.

Insert the following as Form No. (M) 14A at page 363 *ibid*:—

"Form No. (M) 14A.

Form of application for admission as a Pleader/Mukhtar.

To

The Registrar, High Court,

Appellate Jurisdiction,

Calcutta.

(Through the District Judge.....)

SIR,

I request you to admit me as a.....(*a*) and authorise me to practise as such in the district of..... (*b*) for.....(*c*).

2. ....(*d*).

[3. I have served as a probationer with a pleader of the required standing for.....(*e*) months.]

4. A stamp paper of the value of Rs. .....(*f*) is submitted herewith along with the following papers: —

(*i*)
(*ii*)
(*iii*)
(*iv*)

I have the honour to be,

SIR,

Your most obedient servant,

Name.....

Address..... . .....

The 19 . Father's name..... . ...."

Dated... ....

(*a*) Write here "Pleader" or "Mukhtar".

(*b*) State the district.

(*c*) State the year for which certificate is wanted.

(*d*) Write here, in your own hand, whether or not you hold any appointment or employment or are engaged in any trade or business, and, if so, the exact date of acceptance of such appointment or employment or of engagement in such trade or business.

(*e*) Write here 10 or 12 months, as the case may be.

(*f*) State the value of the stamp paper filed.

[ ] Does not apply to persons applying for enrolment as 'Mukhtars."

VI. *Insert* the following after entry No. (M) 184 (old) and (M) 14 (new) in Appendix D—List of forms for indenting purposes, at page 438 *ibid*:—

	(M) 14A	Application for admission as a Pleader or Mukhtar.	Note to Rule 935, Vol. 1.

By order of the High Court,

E. S. SIMPSON, *Registrar*,
Appellate Jurisdiction.

ORDERS BY COMMISSIONERS OF DIVISIONS.

Burdwan Division—Chinsura.

No. 4671J.G.—5th August 1936.—Babu Keshab Chandra Banerjee, Sub-Deputy Collector, Birbhum Sadar, is transferred to the headquarters station of the Hooghly district for employment on general duty. The transfer is made in the public interest.

No. 4677J.G.—4th August 1936.—Babu Sushil Kumar Saha, Sub-Deputy Collector, Hooghly Sadar, now being employed on famine relief work in that district, is appointed to be Circle Officer of Patrasayar in the district of Bankura.

No. 1987L.S.-G.—7th August 1936.—The following draft amendments to the existing by-laws of the Burdwan district board (confirmed by the Commissioner of the Burdwan Division in notification, dated the 1st July 1912, and published at pages 1248-1253, Part I of the *Calcutta Gazette* of the 24th July 1912), as finally adopted by that board at its meeting of the 28th March 1936, are published under rule 6 of the rules issued under Government notification No. 764T.M. of the 4th September 1910 for general information.

2. The proposed amendments will be taken into consideration on or after the 25th September 1936 for the purpose of confirmation, and any objection or suggestion which may be received by the undersigned before that date will be duly considered:—

Draft by-law No. 12.

No person shall, without the permission of the Chairman or Vice-Chairman of the district board or a local board or the district engineer, allow the rainfall from the roof of any building owned or occupied by him to be discharged upon any road by means of a spout or other thing intended for the conveyance of water, or allow any water used for domestic purposes to flow on to the road so as to damage it or cause inconvenience to the public."

No. 2022L.S.-G.—8th August 1936.—In exercise of the powers conferred by rule 19 of the Election Rules under the Local Self-Government Act, as amended by Government notification No. 2898 L.S.-G. of the 5th July 1934, the undersigned determines that, out of eight seats to which members are to be elected in the Vishnupur local board in the district of Bankura, under section 9 of the Bengal Local Self-Government Act, 1885 (Bengal Act III of 1885), one seat shall be reserved for the Muhammadan community which has been declared to be a minority community in Government notification No. 6005 L.S.-G. of the 28th July 1936 for the purpose of election of members to the said local board.

No. 2023L.S.-G.—8th August 1936.—In exercise of the powers conferred by rule 53A of the Election Rules under the Local Self-Government Act, as amended by Government notification No. 2898 L.S.-G. of the 5th July 1934, the undersigned determines that, out of sixteen seats to which members are to be elected to the Bankura district board by the Sadar and Vishnupur local boards under section 7 of the Bengal Local Self-Government Act, 1885 (Bengal Act III of 1885), one seat shall be reserved for the Muhammadan community which has been declared to be a minority community in Government notification No. 6005 L.S.-G. of the 28th July 1936 for the purpose of election of members to the said district board. The number of members to be elected by each local board to the seats so reserved shall be as follows:—

Sadar local board—Nil.

Vishnupur local board—1.

No. 4736J.G.—8th August 1936.—Babu Phanindra Nath Ghosh, Sub-Deputy Collector and Circle Officer, Dantan, in the Sadar subdivision of Midnapore, is granted, under rule 81 (*b*) (*ii*) of the Fundamental Rules, leave on average pay for forty-one days, with effect from the 7th September to 17th October 1936, both days inclusive.

L. B. BURROWS, *Commissioner.*

Orders by the Deputy Inspector-General of Police, Burdwan Range.

Chinsura.—No. 6221.—7th August 1936.—Babu Prafulla Kumar Banarji, officiating Inspector, Howrah, will continue to act as such, *vice* Babu Bankim Chandra Chatarji, Inspector, Howrah, acting as Deputy Superintendent.

On return from leave Babu Satyendra Nath Chatarji, officiating Inspector, Howrah, will continue to act as such in Birbhum, *vice* Babu Gostha Bihari Datta, Inspector, on leave.

Sub-Inspector Panchanan Ray Chaudhuri of Birbhum is appointed to act as Inspector in the above vacancy till he is relieved by Babu Satyendra Nath Chatarji, officiating Inspector.

The transfer is ordered in the interests of public service.

Babu Jitendra Nath Ray, Inspector, Howrah, is granted 4 months' leave on average pay, under rule 81(*b*)(*ii*) of the Fundamental Rules.

Sub-Inspector Mohini Mohan Das of Howrah is appointed to act as Inspector in the above vacancy.

J. M. MACKENZIE,
Deputy Inspector-General of Police (offg.).

Chittagong Division—Chittagong.

No. 3853G.—3rd August 1936.—Babu Rakhahari Chatterji, Sub-Deputy Collector and Khas Tahsildar, Satkania, Chittagong, is allowed leave on average pay for seventeen days, under rule 81 (*b*) (*ii*) of the Fundamental Rules, with effect from the 23rd July 1936.

No. 3921G. — 7th August 1936. — Babu Jamini Kanta Basu, Sub-Deputy Collector, who has been posted to the Chittagong Division in Government notification No. 6465A., dated the 24th July 1936, is posted to the headquarters station of the Chittagong district.

J. D. V. HODGE, *Commissioner* (*offg.*).

Comilla, the 5th August 1936.

The Managing Committee of the Comilla Zilla School have been reconstituted with the following members:—

The District Magistrate, Tippera, President (*ex-officio*).

The Head Master, Comilla Zilla School, Secretary and Vice-President (*ex-officio*).

Babu Promode Ranjan Bhattacherjee, B.A., B.L., Deputy Manager, Chakla Roshnabad Estate (Representative of His Highness the Maharaja of Tripura State).

Babu D. K. Ghosh, M.A., Subdivisional Officer, Sadar South.

Rai Upendra Mohan Mitra Bahadur, M.A., B.L., Representative of guardians of the Hindu boys.

Khan Bahadur Maulvi Siddiquer Rahaman, Public Prosecutor, Comilla, Tippera, Representative of guardians of the Muhammadan boys.

Maulvi Ansor Ali, Assistant Head Master, Comilla Zilla School, Teachers' Representative.

S. N. RAY, *District Magistrate*.

Comilla, the 8th August 1936.

No. 7585M. — It is hereby notified for general information that, under section 13 of the Bengal Village Self-Government Act, 1919 (Bengal Act V of 1919), read with section 6(*2*) and rule 35 of the rules for election and appointment of members of union boards, Munshi Golam Hossain Majumdar has been duly elected as a member of the Barapara union board No. IX of Kotwali police-station in the Sadar (South) subdivision of the district of Tippera, *vice* Babu Kunja Behari Das, removed by the district board.

No. 7587M.—It is hereby notified for general information that, under section 13 of the Bengal Village Self-Government Act, 1919 (Bengal Act V of 1919), read with section 6(*2*) and rule 35 of the rules for election and appointment of members of union boards, Maulvi Akamatulla *alias* Bechu Mia, has been duly elected as a member of the Gunabati union board No. XVIII of Chouddagram police-station in the Sadar (South) subdivision of the district of Tippera, *vice* M. Akamatullah, removed by the district board.

No. 7591M. — It is hereby notified for general information that, under section 13 of the Bengal Village Self-Government Act, 1919 (Bengal Act V of 1919), read with section 6(*3*) and rule 36 of the rules for the election and appointment of members of union boards, Munshi Esadulla of Dharmandal, police-station Nasirnagar, has been appointed as a member of the Nasirnagar union board No. V of police-station Nasirnagar in the Brahmanbaria subdivision of the district of Tippera, *vice* Maulvi Kazi Ismail, removed by the district board.

J. P. RAY, *Additional District Magistrate*.

Dacca Division—Dacca.

No. 4082J. — 7th August 1936. — Babu Upendra Chandra Sinha, Sub-Deputy Collector and Circle Officer, Pirojpur North Circle, in the district of Bakarganj, is transferred to the headquarters station of the district of Mymensingh on general duty.

No. 4088J. — 7th August 1936. — Babu Suresh Chandra Sen Gupta, Sub-Deputy Collector, who has been posted to the Dacca Division, is appointed to be Circle Officer of Pirojpur North Circle in the district of Bakarganj.

W. H. NELSON, *Commissioner*.

Dacca, the 31st July 1936.

No. 312-314V.S.-G.—It is hereby notified for general information that, under section 13 of the Bengal Village Self-Government Act, V of 1919, Babu Jadab Chandra Roy has been appointed to be a member of the Simulia union board in Sabhar police-station, in Sadar (North) subdivision of the district of Dacca, *vice* Babu Satish Chandra Sanyal, deceased.

No. 312-314V.S.-G.—It is hereby notified for general information that, under section 13 of the Bengal Village Self-Government Act, V of 1919, Munshi Sachai Bepari has been appointed to be a member of the Pathalia union board in Sabhar police-station, in Sadar (North) subdivision of the district of Dacca, *vice* Alim Munshi, deceased.

Dacca, the 8th August 1936.

No. 320-21V.S.-G.—It is hereby notified for general information that, under section 13 of the Bengal Village Self-Government Act, V of 1919, Maulvi Nural Islam has been elected to be a member of the Garpara union board in Manikganj police-station, in Manikganj subdivision of the district of Dacca, *vice* Joyenuddin Hossen. Vacancy caused by setting aside of the election case by the Civil Court.

M. M. STUART, *District Magistrate.*

Barisal, the 25th July 1936.

No. 5148J.—It is hereby notified for general information that—

(*a*) Under sub-section (*2*) of section 6 of the Bengal Village Self-Government Act, 1919 (Bengal Act V of 1919), the following gentlemen have been duly elected to be members of the Chirapara-Parsaturia union board in police-station Kowkhali in the Perojpur subdivision of the Bakarganj district:—

Maulvi Momtazuddin Jamaddar.
Babu Srikanta Pal.
Maulvi Abdul Aziz Taluqdar.
Maulvi Hatemali Sardar.
Maulvi Abdul Maleque Miah.
Munshi Sheikh Gaganali.

(*b*) Under sub-section (*3*) of section 6 of the Act, the following gentlemen have been appointed by the District Magistrate of Bakarganj to be members of the said union board:—

Babu Baburam Pal.
Maulvi Erfanuddin Talukdar.
Maulvi Anwar Hossein.

A. HYE, *Addl. District Magistrate.*

Presidency Division—Calcutta.

No. 396J.G.—4th August 1936.—It is hereby notified for general information that in exercise of the powers conferred on me by rule 68 (*2*) of the Bengal Jail Code, 1919, Volume I, as revised, I appoint the following gentlemen to be non-official visitors of the Baraset Sub-Jail in the district of the 24-Parganas for a period of two years, with effect from the 27th August 1936:—

Babu Manmatha Nath Chatterjee.
Maulvi Abdul Gofur.

No. 1976L.S.-G.—5th August 1936.—The following gentlemen have been appointed to be members of the managing committee of the Moheshpur charitable dispensary in the district of Jessore:—

Babu Jitendra Nath Mukherji.
Babu Sachindra Nath Roy Chaudhury.
Babu Lal Mohan Paul.
Babu Smarajit Chandra Dey.
Babu Siva Prosad Roy Chaudhury.
Babu Kshirode Gopal Roy Chaudhury.
Md. Eusuf Ali Biswas.

No. 1688M.—8th August 1936.—In exercise of the power conferred by section 420 of the Bengal Municipal Act, 1932 (Bengal Act XV of 1932), which has been delegated to the Commissioners of Divisions in Government notification, No. 5780M., dated the 28th September 1935, I hereby extend the provisions of that section to the Baruipore Municipality in the district of the 24-Parganas.

A. J. DASH, *Commissioner.*

Berhampore, the 5th August 1936.

It is hereby notified for general information that, under section 13 of the Bengal Village Self-Government Act (Bengal Act V of 1919) read with rule 35 of the rules for the election and appointment of members, etc., of union boards under the said Act, Babu Champalal Serougi has been duly elected to be a member of the Mirzapur union board No. III in Raghunathganj police-station of Jangipur subdivision in the district of Murshidabad, *vice* Babu Satyendra Nath Sarkar, resigned and deceased.

L. G. DURNO, *District Magistrate.*

Khulna, the 6th August 1936.

It is hereby notified for general information that, under section 11 of the Bengal Village Self-Government Act, 1919 (Bengal Act V of 1919), read with rule 21 of the rules for the election and appointment of members, etc., the following gentlemen have been duly elected to be members of the Goalpara-Boyra union board of police-station Daulatpur in the Sadar subdivision of the Khulna district:—

Ward No. I.

Babu Amarendra Nath Das.
Babu Narayan Chandra Das.
Babu Surendra Nath Datta.

Ward No. II.

Babu Nakuleswar Majumdar.
Maulvi Abdul Hakim Molla.
Maulvi Meajan Sheik.

It is hereby notified for general information that, under section 11 of the Bengal Village Self-Government Act, 1919 (Bengal Act V of 1919), read with rule 27 of the rules for the election and appointment of members, etc., the following gentlemen have been appointed by me to be members of the Goalpara-Boyra union board of police-station Daulatpur in the Sadar subdivision of the Khulna district:—

Maulvi Mahabubor Rob.
Babu Isti Charan Biswas.
Babu Bidhu Bhusan Datta.

Khulna, the 7th August 1936.

It is hereby notified for general information that Babu Banbihari Das, Assistant Head Master, Khulna Zilla School, has been appointed as a representative of the teaching staff on the Managing Committee of the Khulna Zilla School, *vice* Maulvi Abdul Majid, transferred.

B. SARKAR, *District Magistrate.*

Nadia, the 4th August 1936.

No. 2170L. S.-G.—It is hereby notified for general information that:—

(*a*) Under sub-section (*2*) of section 8 of the Bengal Village Self-Government Act, 1919 (Bengal Act V of 1919), the following gentlemen have been duly elected to be members of the undermentioned union boards in police-stations mentioned below in the Kushtia subdivision of the Nadia district:—

Kushtia police-station.

No. 1.—Puratan Kushtia union board.

Single Ward.

Babu Jatindra Nath Saha.
Munshi Osman Sheikh.
Babu Radha Binode Das.
Munshi Minhajuddin Ahmed.
Munshi Sarfuddin Ahmed.
Munshi Rahaman Pramanick.

No. 2 Hatosh Haripur union board.

Single Ward.

Maulvi Muhammad Harun-ur-Rashid.
Munshi Didar Box Mandal.
Maulvi Muhammad Abdur Rahman.
Maulvi Muhammad Abul Khoyer.
Munshi Minajuddin Pramanick.
Maulvi Raybenuddin Khan Chowdhury.

No. 3 Barkhada union board.

Single Ward.

Munshi Sheikh Elahi Box.
Munshi Mir Tosaddak Hossain.
Munshi Lal Mahmmad.
Maulvi Azizuddin Ahmed.
Babu Kunja Bihari Saha.
Babu Basanta Kumar Roy Chowdhury.

No. 4 Majampur union board.

Ward No. I.

Maulvi Fazlul Bari Chowdhury.
Maulvi Ajgarali.
Maul i Abdul Jobbar Chowdhury.

Ward No. II.

Maulvi Moijuddin Mondal.
Maulvi Mobarak Hossain Biswas.
Maulvi Akmal Hossain Mian.

No. 5 Jagati union board.

Ward No. I.

Munshi Achhimaddi Pramanick.
Babu Haran Chandra Ghosh.
Munshi Mojahar Biswas Hazi.

Ward No. II.

Munshi Jahiruddi Pramanick.
Munshi Bazlar Rahaman Joardar.
Munshi Serajul Islam Joardar.

No. 6—Jeorakhi union board.

Ward No. I.

Babu Gouri Kanto Roy Chowdhury.
Babu Nityananda Ghosh.
Munshi Tofazzal Hossain Mian.

Ward No. II.

Babu Suraja Nath Majumdar.
Munshi Esahaque Ali.
Munshi Mojahar Uddin Ahmed.

No. 7—Alampur union board.

Ward No. I.

Babu Haripada Majumdar.
Babu Satish Chandra Saha.

Ward No. II.

Munshi Esanulla Khan.
Munshi Nurul Islam.

Ward No. III.

Munshi Muhammad Jharu Biswas.
Babu Suresh Chandra Ghosh.

No. 8 Ailchara union board.

Ward No. I.

Maulvi Abdur Rahaman.
Munshi Muhammad Ali Biswas.
Munshi Muhammad Ahad Ali Mondal.

Ward No. II.

Babu Tustu Lal Kundu.
Munshi Budhai Mondal.
Munshi Chand Ali Biswas.

No. 9—Patikabari union board.

Ward No. I.

Munshi Tofazzal Ali Chowdhury.
Munshi Hazari Biswas.

Ward No. II.

Babu Gangadhar Pal.
Munshi Abdul Jubbar Seikh.

Ward No. III.

Babu Surendra Nath Pal.
Babu Rati Kanta Pal.

No. 10—Jhaudia union board.

Ward No. I.

Munshi Manick Biswas.
Babu Tarapada Kundu.

Ward No. II.

Babu Dinanath Biswas.
Munshi Samedali Mondal.

Ward No. III.

Munshi Abdul Latif Joardar.
Babu Monmotha Nath Bose.

No. 11—Ujangram union board.

Ward No. I.

Munshi Aolad Ali Biswas.
Babu Satish Chandra Das.

Ward No. II.

Munshi Ajijar Rahman Khondkar.
Munshi Ajijar Rahman Biswas.

Ward No. III.

Munshi Belayet Ali Biswas.
Munshi Abdul Motleb Munshi.

No. 12—Abdalpur union board.

Ward No. I.

Munshi Somser Ali Biswas.
Munshi Mojahar Ali Biswas.

Ward No. II.

Babu Gostha Bihari Lahiri.
Munshi Meherali Biswas.

Ward No. III.

Munshi Eradali Biswas.
Munshi Muhammad Meher Ali.

No. 13—Harinarayanpur union board.

Ward No. I.

Babu Bibhuti Bhusan Chakravarty.
Babu Nalini Mohan Chowdhury.

Ward No. II.

Babu Trilochan Sarker.
Munshi Erfan Biswas.

Ward No. III.

Babu Krishna Lal Biswas.
Munshi Tabibar Rahaman Biswas.

Kumarkhali police-station.

No. 2—Shelidah union board.

Ward No. I.

Babu Ajir Nath Nandi.
Munshi Nuruddin Ahmed.
Babu Satish Chandra Ghose.

Ward No. II.

Munshi Ahmed Ali.
Munshi Nader Pramanick.
Babu Kedar Nath Roy.

No. 3—Jagannathpur union board.

Ward No. I.

Babu Satish Chandra Ghose.
Munshi Surat Ali Merdha.

Ward No. II.

Maulvi Syed Abul Fazal.
Munshi Joyanuddi Hazi.

Ward No. III.

Munshi Moyejuddin Pramanick.
Munshi Abdul Gani.

No. 4—Kanthagazra union board.

Ward No. I.

Babu Kshitish Chandra Chakravarty.
Babu Ambika Charan Ghose.

Ward No. II.

Munshi Erap Ali Khan.
Babu Makhan Lal Kundu.

Ward No. III.

Babu Anadi Charan Chowdhury.
Munshi Khabiruddin Biswas.

No. 6—Sadaki union board.

Ward No. I.

Babu Heramba Nath Roy.
Munshi Safiuddin Molla.

Ward No. II.

Babu Bishnupada Biswas.
Munshi Wazedali Khondkar.

Ward No. III.

Babu Sarat Chandra Gossain.
Munshi Esmail Hossain.

No. 7—Nandalalpur union board.

Ward No. I.

Munshi Eusufuddin.
Munshi Tasiruddi Biswas.

Ward No. II.

Munshi Ajiruddin Khondkar.
Munshi Jahurul Haque.

Ward No. III.

Munshi Abdul Gaffur.
Munshi Muhammad Najarali Biswas.

No. 8—Chapra union board.

Ward No. I.

Maulvi Sheikh Moyenuddin Ahmed.
Babu Jadu Nath Sen.

Ward No. II.

Munshi Jalaluddin Ahmed.
Babu Haran Chandra Saha.

Ward No. III.

Munshi Khondkar Abdul Adud.
Babu Nritya Gopal Saha.

No. 9—Bagulat union board.

Ward No. I.

Munshi Nehedali Biswas.
Munshi Dabiruddi Biswas.

Ward No. II.

Munshi Bilayet Hossain.
Munshi Mahasin Ali Biswas.

Ward No. III.

Munshi Abdul Jalil Khondkar.
Munshi Abdul Sobhan Molla.

Khoksa police-station.

No. 2—Someshpur union board.

Ward No. I.

Babu Akshoy Bhusan Ghosh.
Babu Rajendra Nath Bose.
Munshi Khondkar Muhammad Tajuddin.

Ward No. II.

Munshi Kesmat Ali Khan.
Babu Upendra Nath Ghose.
Babu Dina Nath Nandi.

No. 3 Simulia union board.

Ward No. I

Munshi Naziruddin Momin.
Munshi Abbas Ali Sheikh.

Ward No. II.

Munshi Abdul Kader Biswas.
Munshi Kokil Pramanick.

Ward No. III.

Babu Satish Chandra Biswas.
Babu Jyotish Chandra Ghose.

No. 5—Osmanpur union board.

Ward No. I.

Maulvi Syed Oliulla.
Munshi Abdul Wahed Molla.
Munshi Etem Ali Khan.

Ward No. II.

Munshi Rojdar Ali Mandal.
Munshi Abdul Bached Molla.
Munshi Khorsed Ali Molla.

No. 6 Betbaria union board.

Ward No. I.

Munshi Ujaluddin.
Munshi Abdur Rajjak Sheikh.
Munshi Ajijuddin Biswas.

Ward No. II.

Munshi Esmail Biswas.
Munshi Abdul Karim Biswas.
Babu Trailokya Nath Biswas.

No. 7—Jayantihazra union board.

Ward No. I.

Babu Surendra Nath Kundu.
Babu Aswini Kumar Kundu.
Babu Pramatha Nath Pal.

Ward No. II.

Babu Lalit Mohan Bose.
Babu Krishna Lal Nandi.
Munshi Najiruddin Ahmed.

Bheremara police-station.

No. 1—Bahadurpur union board.

Ward No. I.

Dr. Nibaran Chandra Mukherjea.
Babu Srimanta Kundu.

Ward No. II.

Dr. Muhammad Syed Ali.
Munshi Muhammad Mozaffar Hossain.

Ward No. III.

Babu Nil Kanta Saha.
Munshi Durlabh Pramanick.

No. 2 Golapnagar union board.

Ward No. I.

Babu Purna Chandra Pramanick.
Munshi Miajan Mandal.

Ward No. II.

Munshi Kamaruddin Sardar.
Munshi Ayenuddin Pramanick.

Ward No. III.

Munshi Muhammad Tofazzal Hossain Malitha.
Babu Haran Chandra Sarker.

No 8 Juniadah union board.

Ward No. I.

Munshi Jaynal Malitha.
Munshi Muhammad Panchu Biswas.

Ward No. II.

Munshi Muhammad Abbas Ali.
Babu Jogendra Narayan Tewari.

Ward No. III.

Babu Mohan Lal Pandit.
Munshi Atar Ali Shah.

No. 4—Mokarimpur union board.

Ward No. I.

Babu Nripendra Kumar Maitra.
Babu Kalipada Bhattacharjea.
Munshi Muhammad Ali.

Ward No. II.

Munshi Muhammad Moyezuddin Mondal.
Munshi Yamuddin Mondal.
Maulvi Muhammad Ali Mian.

No. 5—Dharampur union board.

Ward No. I.

Babu Surendra Nath Banerjee.
Munshi Kasimuddin Pramanick.

Ward No. II.

Maulvi Makbul Ahmed Khan.
Munshi Muhammad Foyezuddin.

Ward No. III.

Babu Gour Gopal Goswami.
Vacant (*vide* separate notification).

No. 6—Bheramara union board.

Ward No. I.

Munshi Kafiluddin Biswas.
Babu Brindaban Chandra Saha.

Ward No. II.

Babu Bilasrai Agarwalla.
Babu Khagendra Nath Biswas.

Ward No. III.

Dr. Muhammad Afiluddin Mian.
Munshi Muhammad Fateh Ali.

Daulatpur police-station.

No. 1—Pragpur union board.

Ward No. I.

Munshi Yaruddin Molla.
Babu Krishna Chandra Sarker.

Ward No. II.

Babu Banawari Lal Sarker.
Babu Nidhuban Bhowmick.

Ward No. III.

Munshi Jasimuddin Ahmed.
Dr. Muhammad Atahar Hossain.

No. 2—Mathurapur union board.

Ward No. I.

Munshi Muhammad Sahabatulla Malitha.
Babu Lalit Mohan Dutta.

Ward No. II.

Babu Radhaballav Biswas.
Munshi Muhammad Harun-ur-Rashid.

Ward No. III.

Munshi Muhammad Altaf Hossain Mia.
Babu Narendra Nath Biswas.

No. 5—Hogolbaria union board.

Ward No. I.

Babu Gour Gopal Dutta.
Maulvi Fakir Muhammad Biswas.

Ward No. II.

Munshi Tufani Sardar.
Munshi Haifatulla Mondal.

Ward No. III.

Munshi Muhammad Ansarul Huq.
Babu Naresh Chandra Pal.

No. 7—Refaitpur union board.

Ward No. I.

Babu Manindra Mohan Acharjya.
Babu Santi Bhusan Acharjya.

Ward No. II.

Babu Jyotish Chandra Sarkar.
Babu Pran Nath Biswas.

Ward No. III.

Babu Rajendra Nath Sarker.
Munshi Habibar Rahman Mian.

No. 8—Daulatpur union board.

Ward No. I.

Babu Bidhu Bhusan Saha.
Munshi Arshad Ali Mandal.

Ward No. II.

Maulvi Afsar Hussain.
Maulvi Hazi Abul Hussain.

Ward No. III.

Maulvi Moslem Ali.
Dr. Mozaharul Islam.

No. 9—Abadaria union board.

Ward No. I.

Babu Debendra Nath Biswas.
Babu Hrishikesh Biswas.
Munshi Taibuddin Mandal.

Ward No. II.

Munshi Abdul Sobhan Malitha.
Babu Muluk Chand Biswas.
Vacant (*vide* separate notification).

No. 10—Boalia union board.

Ward No. I.

Munshi Muhammad Golam Rahman.
Munshi Muhammad Ful Chand.

Ward No. II.

Maulvi Azhar Ali.
Babu Radha Govinda Biswas.

Ward No. III.

Babu Rasharaj Saha.
Dr. Manmatha Nath Biswas.

No. 12—Aria union board.

Ward No. I.

Maulvi Ahmed Ali Mian.
Babu Basudeb Agarwalla.

Ward No. II.

Babu Rasick Lal Mandal.
Munshi Muhammad Ali Mandal.

Ward No. III.

Munshi Fazal Mandal.
Babu Ashutosh Biswas.

Mirpur police-station.

No. 2—Bahalbaria union board.

Ward No. I.

Babu Nitai Chandra Goswami.
Babu Surendra Kumar Mazumdar.

Ward No. II.

Babu Mahendra Nath Biswas.
Munshi Tafseruddin Biswas.

Ward No. III.

Munshi Muhammad Eshaque Ali.
Munshi Panju Rahman Pramanick.

No. 3—Talbaria union board.

Ward No. I.

Babu Ramani Mohan Bhowmick.
Munshi Majjam Hussain Biswas.

Ward No. II.

Munshi Abul Hussain Shah Fakir.
Munshi Mozahar Ali Bepari.

Ward No. III.

Munshi Abdul Jalil.
Munshi Jasimuddin Ahmed.

No. 4—Baruipara union board.

Ward No. I.

Munshi Mir Akmal Hussain.
Munshi Muhammad Syedar Rahman.

Ward No. II.

Munshi Muhammad Ali Sheikh.
Munshi Muhammad Abdul Jubbar Sheikh.

Ward No. III.

Munshi Chiniruddin Malitha.
Babu Chintamoni Maitra.

No. 5—Mirpur union board.

Ward No. I.

Babu Bancha Ram Nath.
Munshi Syed Ali Biswas.

Ward No. II.

Maulvi Abdul Aziz.
Munshi Afsar Ali Sheikh.

Ward No. III.

Munshi Muhammad Osman Gani.
Babu Sarat Chandra De.

No. 6—Amla union board.

Ward No. I.

Babu Mukunda Lal Saha.
Babu Adyanath Saha.

Ward No. II.

Munshi Reazuddin Ahmed.
Munshi Seraj Ali Biswas.

Ward No. III.

Babu Sriram Chandra Nath.
Babu Benwari Lal Biswas.

No. 7—Sadarpur union board.

Ward No. I.

Babu Baroda Prosanna Bhattacharjea.
Babu Promode Krishna Sarkar.

Ward No. II.

Maulvi Abdul Karim Molla.
Maulvi Muhammad Eshaque Chowdhury.

Ward No. III.

Babu Kalipada Pal.
Babu Phani Bhusan Pal.

No. 8—Chhatian union board.

Ward No. I.

Maulvi Abdul Hussain Biswas.
Munshi Soad Ali.

Ward No. II.

Munshi Mafizuddin Ahmed.
Munshi Kader Baksha Biswas.

Ward No. III.

Munshi Muhammad Bellal Hossain.
Munshi Abdul Bagaja.

No. 10—Kursha union board.

Ward No. I.

Babu Surendra Nath Joardar.
Munshi Ahmed Ali Biswas.

Ward No. II.

Dr. Tanjilar Rahman.
Munshi Ijjat Ali Biswas.

Ward No. III

Munshi Hazi Rostum Ali Molla.
Munshi Kalimuddin Mondal.

No. 11—Malirhad union board.

Ward No. I.

Babu Gayanath Biswas.
Maulvi Fayezuddin Ahmed.

Ward No. II.

Maulvi Muhammad Abdul Aziz Mian.
Munshi Ershad Ali Biswas.

Ward No. III.

Munshi Ahad Ali Biswas.
Babu Kalipada Pramanick.

No. 12—Ambaria union board.

Ward No. I.

Babu Bishnunarayan Sarkar
Munshi Ismail Hussain Sheikh.

Ward No. II.

Munshi Fakir Muhammad Biswas.
Munshi Abdul Jobbar Biswas.

Ward No. III.

Munshi Muhammad Soleman Sheikh.
Munshi Mir Abul Hussain Chowdhury.

(*b*) Under sub-section (*3*) of section 6 of the Bengal Village Self-Government Act, 1919 (Bengal Act V of 1919), the following gentlemen have been appointed by the District Magistrate of Nadia to be members of the undermentioned union boards in police-stations mentioned below in the Kushtia subdivision of Nadia district:—

Kushtia police-station.

No. 1.—Puratan Kushtia union board.

Munshi Hazi Alimoddin Mian.
Munshi Nuruddin Pramanick.
Babu Jogendra Nath Biswas.

No. 2—Hatosh Haripur union board.

Munshi Muhammad Azizar Rahman.
Babu Hridoy Nath Mandal.
Munshi Samiruddin Mian.

No. 3—Barkhada union board.

Maulvi Moyenuddin Ahmed.
Babu Birinchi Lal Pramanick.
Munshi Khabiruddin Ahmed.

No. 4—Majampur union board.

Munshi Huzzatullah Mondal.
Babu Bishnucharan Ghose.
Babu Nripendra Narayan Biswas.

No. 5—Jagati union board.

Maulvi Mir Abdur Razzak.
Babu Hajari Gopal Sen.
Babu Surendra Nath Mistri.

No. 6—Jeorakhi union board.

Munshi Abdul Aziz Molia.
Munshi Serajali Mandal.
Babu Tustu Lal Joardar.

No. 7.—Alampur union board.

Munshi Ahad Ali Biswas.
Babu Jugal Krishna Biswas.
Munshi Asraf Biswas.

No. 8—Ailchara union board.

Munshi Forman Ali Joardar.
Babu Bishnu Pada Ghosh.
Babu Keshab Chandra Pramanick.

No. 9—Patikabari union board.

Munshi Elahi Box Biswas.
Babu Ramnath Saha
Babu Benawari Lal Bisyas.

No. 10—Jhaudia union board.

Munshi Joakkel Biswas.
Babu Lalit Mohan Saha.
Munshi Keamuddi Biswas.

No. 11—Ujangram union board.

Munshi Muhammad Baseruddin Molla.
Babu Kshetra Nath Biswas.
Babu Narendra Nath Dutta.

No. 12—Abdalpur union board.

Munshi Abdul Sobhan Biswas.
Babu Hem Chandra Naskar.
Babu Purna Chandra Adhikari.

No. 13—Harinarayanpur union board.

Munshi Makimuddin Biswas.
Munshi Danesuddin Molla.
Babu Charu Bhusan Bagchi.

Kumarkhali police-station.

No. 2—Shelidah union board.

Munshi Abu Doud.
Munshi Hekmat Ali Khan.
Babu Rai Mohan Biswas.

No. 3—Jagannathpur union board.

Babu Debendra Nath Biswas.
Babu Satish Chandra Sarkar.
Babu Kunja Bihari Sarkar.

No. 4—Kanthagazra union board.

Munshi Kofiluddin Molla.
Babu Kshitish Chandra Ghosh.
Munshi Sheikh Abdar Rahaman.

No. 6—Sadaki union board.

Munshi Moyejuddin Biswas.
Babu Kalipada Biswas.
Babu Dwijendra Nath Roy.

No. 7—Nandalalpur union board.

Maulvi K. M. Golam Sarwar.
Munshi Asamuddin Sardar.
Babu Upendra Nath Ghose.

No. 8—Chapra union board.

Munshi Tasiruddin Malitha.
Babu Indu Bhusan Das.
Babu Hemlal Biswas.

No. 9—Bagulat union board.

Babu Haripada Nag.
Babu Shyama Charan Mazumdar.
Munshi Jonab Ali Khan.

Khoksa police-station.

No. 2—Someshpur union board.

Munshi Azimuddin Ahmed.
Munshi Seikh Abdul Wahed.
Babu Tustu Lal Mandal.

No. 3—Simulia union board.

Babu Jadu Nath Dutta.
Babu Jagat Bandhu Biswas.
Munshi Basirudin Molla.

No. 5—Osmanpur union board.

Babu Nirod Baran Sarkar.
Babu Gnanendra Mohan Majumdar.
Babu Nripendra Nath Biswas.

No. 6—Betbaria union board.

Munshi Muhammad Eusof Ali.
Babu Srish Chandra Chakravarty.
Babu Panchanan Haldar.

No. 7—Jayanthihazra union board.

Babu Monoranjan Maitra.
Munshi Muhammad Pradhan Mal.
Munshi Ahammad Ali Biswas.

Bheramara police-station.

No. 1—Bahadurpur union board.

Babu Rasik Lal Haldar.
Babu Panchanan Ray.
Munshi Muhammad Erad Ali.

No. 2—Gopalnagar union board.

Dr. Muhammad Fazlul Huq.
Babu Lakshmi Narayan Biswas.
Maulvi A. S. M. Shamsul Huq.

No. 3—Juniadah union board.

Babu Upendra Nath Mukherjee.
Maulvi Khondkar Abdul Huq.
Dr. Ananga Mohan Majumdar.

No. 4—Mokarimpur union board.

Babu Narapati Biswas.
Babu Krishnabandhu Swarnakar.
Maulvi Mahammed Ali Pramanick.

No. 5—Dharampur union board.

Babu Krishna Gobinda Goswami.
Banu Janaki Nath Kundu.
Maulvi Mansur Ahmed Khan.

No. 6—Bheramara union board.

Babu Bhabesh Chandra Majumdar.
Munshi Akher Ali Molla.
Dr. Bidyendra Sekhar Biswas.

Daulatpur police-station.

No. 1—Pragpur union board.

Maulvi Tasiruddin Ahmed.
Munshi Golam Husain Biswas.
Babu Sasadhar Chandra Ghosh.

No. 2—Mathurapur union board.

Maulvi Muhammad Sariat Ulla.
Munshi Mir Haidar Ali.
Babu Jagat Chandra Pal.

No. 5—Hogolbaria union board.

Babu Moni Mohan Biswas.
Babu Jogendra Nath Pal.
Munshi Ayezuddin Mondal.

No. 7—Refaitpur union board.

Babu Surendra Nath Mondal.
Munshi Kinoo Mondal.
Munshi Jainal Abedin.

No. 8—Daulatpur union board.

Babu Abinash Chandra Biswas.
Babu Monoranjan Biswas.
Munshi Abu Affan Mian.

No. 9—Adabaria union board.

Babu Debendra Kumar Biswas.
Maulvi Syed Momtaz Ali.
Babu Panchanan Biswas.

No. 10—Boalia union board.

Babu Bata Krishna Biswas.
Munshi Lal Chand Biswas.
Munshi Muhammad Kasimuddin.

No. 12—Aria union board.

Babu Srikanta Pramanick.
Munshi Habibur Rahman Molla.
Munshi Johiruddin Molla.

Mirpur police-station.

No. 2—Babalbaria union board.

Babu Makhan Lal Majumdar.
Maulvi Muhammad Taffazzl Hussain.
Maulvi Choudhury Nuruz Zaman.

No. 3—Talbaria union board.

Babu Rakhalraj Saha.
Babu Surendra Nath Saha.
Babu Upendra Nath Bhowmick.

No. 4—Baruipara union board.

Maulvi Muhammad Alauddin.
Munshi Khabiruddin Ahmed.
Babu Satish Chandra Nath.

No. 5—Mirpur union board.

Maulvi Muhammad Mosaruf Hussain Chowdhury.
Babu Amiya Charan Dutta.
Babu Purna Chandra Adhikary.

No. 6—Amla union board.

Babu Sudhir Kumar Goswami.
Maulvi Kazi Attabuddin.
Maulvi Mirja Kauseruddin Ahmed.

No. 7—Sadarpur union board.

Maulvi Ali Muhammad.
Munshi Momin Malitha.
Babu Bipradas Adhikari.

No. 8—Chhatian union board.

Maulvi Muhammad Idris Ali.
Maulvi Muhammad Kafiluddin.
Babu Satish Chandra Nath.

No 10—Kursa union board.

Babu Debendra Nath Joardar.
Babu Radha Binod Pramanick.
Munshi Abul Hussain Biswas.

No. 11—Malirhad union board.

Babu Tarakbrahma Brahmachari.
Munshi Abbas Ali Biswas.
Babu Nani Gopal Nandi.

No. 12—Ambaria union board.

Babu Rati Kanta Saha.
Dr. Bepin Behari Biswas.
Babu Prasanna Kumar Sarkar.

(*c*) Under sub-section (*4*) of section 6 of the Bengal Village Self-Government Act, 1919 (Bengal Act V of 1919), the following gentlemen have been appointed by the District Magistrate of Nadia to be members of the undermentioned union boards in police-stations mentioned below in the Kushtia subdivision of Nadia district:—

Bheramara police-station.

Dharampur union board.

Babu Nani Gopal Acharjya.

Daulatpur police-station.

Adabaria union board.

Munshi Saker Ali Biswas.

Krishnagar, the 8th August 1936.

No. 2402L. S.-G.—It is hereby notified for general information that, under section 13 of the Bengal Village Self-Government Act, 1919 (Bengal Act V of 1919), read with rule 36 of the rules for election and appointment of members of union boards, Babu Subodh Chandra Ghose has been appointed as a member of Arbandy union board in police-station Santipur in Ranaghat subdivision of the Nadia district, *vice* Mr. A. C. Banerji, resigned.

S. K. DAS GUPTA, *District Magistrate.*

Orders by the Deputy Inspector-General of Police, C. I. D. and Intelligence Branch.

C. I. Department.

Calcutta.—No. 9451R.O.—7th August 1936.—Sub-Inspector Jatindra Nath Sanyal is appointed to act as Inspector with effect from 3-8-1936, a.m., *vice* Babu Sukdeb Sarkar, Inspector, left on transfer to act as Deputy Superintendent, Faridpur.

Intelligence Branch.

No. 1381/R.O.—6th August 1936.—Babu Tarak Prasad Bhattacharji, Inspector, is granted 1 month's leave on average pay in extension of the leave already granted to him.

C. E. S. FAIRWEATHER,

Deputy Inspector-General of Police (offg.).

Rajshahi Division—Jalpaiguri.

No. 3683M.—1st August 1936.—It is hereby notified for general information that, under section 15 of the Bengal Local Self-Government Act, III of 1885, as amended by Act V (B. C.) of 1908, the following gentlemen are appointed to be members of the Siliguri local board in the district of Darjeeling:—

Mr. H. W. Cox, representative of the Terai Planters' Association.

Mr. A. Robertson, representative of the Terai Planters' Association.

Mr. J. H. Campbell, representative of the Terai Planters' Association.

Mr. T. P. Banerjee, representative of the Indian Planters' Association.

Babu Lakshminarayan Mazumdar, M.A., B.L., Pleader.

Babu Bijoy Basanta Bose, Manager, Thanjhora Tea Estate, representing the tea industry.

Babu Abani Nath Bhattacharjea, B.L., Pleader.

Maulvi Syed Muhammad, B.L., Pleader, representing the Muhammadan community.

Babu Hanuman Prosad, representing the Behari community.

Babu Birendra Nath Roy Sarkar, representing the Terai Jotedars' Association.

The Subdivisional Officer, Siliguri, *ex-officio*.

The Sub-Deputy Collector and Khas Mahal Manager of the Terai Government Estate, *ex-officio*.

No. 3751M.—4th August 1936.—It is hereby notified for general information that, under section 15 of the Bengal Local Self-Government Act, III of 1885, as amended by Act V (B. C.) of 1908, the following gentlemen are appointed to be members of the Kalimpong local board in the district of Darjeeling:—

Subdivisional Officer, Kalimpong (*ex-officio*).

Divisional Forest Officer, Kalimpong (*ex-officio*).

Khas Mahal Manager, Kalimpong (*ex-officio*).

Rev. Father J. R. Fox.

Babu Prem Singh Kumar.

Kazi Pem Dorjee.

Rev. W. M. Scott.

Mr. C. H. Wangdi.

Rai Pasang Targain.

Babu Gopaldas Prodhan.

No. 3782M.—5th August 1936.—In exercise of the power delegated to me by Government of Bengal, Local Self-Government Department, notification No. 5780M., dated the 28th September 1935, I direct the extension of section 420 of the Bengal Municipal Act, 1932 (Act XV of 1932), to the Nator Municipality in the district of Rajshahi.

No. 3182J.—7th August 1936.—Maulvi Nizamuddin Ahmed, Sub-Deputy Collector of Jalpaiguri, is allowed leave on average pay for thirteen days, with effect from 5th October 1936, under rule 10 of the Bengal Services (Revision of Leave) Rules, 1934.

No. 3187J.—7th August 1936.—Maulvi Zahurul Qaiyum, Sub-Deputy Collector, posted to Rajshahi Division in Government notification No. 6777A., dated the 31st July 1936, is transferred to Rangpur Sadar to be employed on general duties.

The transfer is made in the public interest.

No. 3823P.W.—7th August 1936.—It is hereby notified for general information that in exercise of the power delegated to me by Bengal Government notification No. 3403-L.S.-G., dated the 1st December 1904, I order the establishment under section 6(*c*) of the Bengal Ferries Act, I of 1883, of the undermentioned public ferries in the district of Rangpur:—

(1) Kundal ferry of class BII over the Kharkharia river at the 2nd mile of road No. 19 in police-station Saidpur in Nilphamari subdivision.

(2) Ferry of class BII over the Auliakhana river at the break of the 15th mile of road No. 52 in police-station Jaldhaka in Nilphamari subdivision.

(3) Ferry of class BII over the Khora river at the break of the 12th mile of the Nilphamari local board road No. 15 in police-station Saidpur in Nilphamari subdivision.

(4) Boragari ferry of class BII over the Dauni river at Boragari at the 6th mile of the district board road No. 35 in police-station Jaldhaka in Nilphamari subdivision.

In exercise of the powers delegated to me by the Bengal Government notification No. 217L.S.-G., dated the 12th January 1905, I also direct under section 35 of the same Act, that the said ferries shall be managed by the district board of Rangpur and that all the proceeds of the said ferries and all the fines levied and the compensation received under the same Act in respect thereof shall be paid into the district fund with effect from the date of this notification.

L. R. FAWCUS, *Commissioner (offg.)*.

Dinajpur, the 3rd August 1936.

No. 5436J.—It is hereby notified for general information that, under section 13 of the Bengal Village Self-Government Act, 1919 (Bengal Act V of 1919), Babu Trailakya Nath Sarker of Sahanti, police-station Gangarampur, has been duly appointed to be a member of Nandanpur union board No. III of police-station Gangarampur, within the jurisdiction of Balurghat subdivision of the district of Dinajpur, in place of Babu Dola Mandal, deceased.

Dinajpur, the 7th August 1936.

No. 5599J. — It is hereby notified for general information that—

(*a*) Under sub-section (*2*) of section 6 of the Bengal Village Self-Government Act, 1919 (Bengal Act V of 1919), the following gentlemen have been duly elected to be members of the Hili union board in police-station Balurghat within the jurisdiction of the Balurghat subdivision of the Dinajpur district:—

Rai Saheb Kumud Nath Das.

Babu Ashutosh Munshi.

Babu Tarakeswar Majumder.

Babu Aswini Kumar Saha.

Babu Mahendra Nath Sarker.

Babu Jatindra Nath Sarker.

(*b*) Under sub-section (*3*) of section 6 of the Bengal Village Self-Government Act, 1919 (Bengal Act V of 1919), the following gentlemen have been duly appointed by the undersigned to be members of the Hili union board in police-station Balurghat within the jurisdiction of the Balurghat subdivision of the Dinajpur district:—

Babu Manik Chand Seraogi.

Munshi Jaffar Ahmad.

Munshi Md. Zalilar Rahaman.

M. K. KIRPALANI, *District Magistrate.*

Bogra, the 3rd August 1936.

No. 3737J. — It is hereby notified for general information that, under section 13 of the Bengal Village Self-Government Act, 1919 (Bengal Act V of 1919), read with rule 35 of the rules for the election and appointment of members of union boards, etc., the following gentlemen have been duly elected to be members of Ward No. I of Kalerpara union board, police-station Dhunat, district Bogra:—

Munshi Azizar Rahaman Pramanik, *vice* Munshi Golam Rahaman Joardar, removed.

Munshi Aftab Hossen Sarker, *vice* Munshi Md. Abbas Ali, removed.

Munshi Azhar Ali Sarker, *vice* Munshi Abdul Karim Joardar, removed.

T. I. M. NURANNABI CHAUDHURI,
District Magistrate.

Pabna, the 8th August 1936.

It is hereby notified for general information that, under section 13 of the Bengal Village Self-Government Act, 1919 (Bengal Act V of 1919), Babu Ghana Shyam Agarwala of Dhaparibandar has been appointed to be a member of the Sara union board under Sara police-station in the Sadar subdivision of the Pabna district, *vice* Syed Altaf Hossain, deceased.

L. C. GUHA, *District Magistrate.*

Orders by the Deputy Inspector-General of Police, Rajshahi Range.

Jalpaiguri.—No. 5790.—7th August 1936. —Maulvi Afazuddin Ahmad, Inspector, Rajshahi, is granted 3 months and 9 days' leave on average pay, on medical certificate, under rule 81(*b*)(*ii*) of the Fundamental Rules, in extension of the leave already granted to him.

E. B. JONES,
Deputy Inspector-General of Police.

Registered No. C207

The Calcutta Gazette

THURSDAY, AUGUST 13, 1936.

PART IA

Orders and Notifications by the Government of India republished for general information.

LEGISLATIVE DEPARTMENT.

NOTIFICATIONS.

Simla, the 28th July, 1936.

No. F. 100/IV/36-C. & G.—In accordance with the provisions of sub-rule (9) of rule 14 of the Council of State Electoral Rules, the name of the following candidate, who has been declared to be elected a Member of the said Council by the constituency mentioned opposite his name, is hereby published:—

Name.	Constituency.
Mr. C. G. Arthur ..	Bengal Chamber of Commerce.

The 30th July, 1936.

No. F. 101-XIX/36-C. & G.—The Governor General is pleased to accept the resignation by Mr. A. S. Hands, C.I.E., of his office of Member of the Legislative Assembly.

G. H. SPENCE,
Secy. to the Govt. of India.

FOREIGN AND POLITICAL DEPARTMENT.

NOTIFICATION.

Simla, the 29th July 1936.

No. 448-E.—Mr. H. E. Richardson, of the Political Department, on return from leave, is posted as British Trade Agent at Gyantse and Assistant to the Political Officer in Sikkim, with effect from the afternoon of the 20th July 1936.

The unexpired portion of his leave is hereby cancelled.

H. A. F. METCALFE,
Foreign Secy. to the Govt. of India.

DEPARTMENT OF COMMERCE.

NOTIFICATION.

COMMERCE

Simla, the 1st August 1936.

No. 47-C. (1)/36.—In pursuance of rule 3 of the Soft Coke Cess Committee Rules, the following persons have been nominated to the Soft Coke Cess Committee by the authorities or bodies specified against each:—

	Name of person.	Authority or body by whom recommended.
1.	Rai A. C. Bannerjee Bahadur, M.A., C.I.E.	The Local Government of Bengal.
2.	Mr. N. Baksi, I.C.S., Additional Deputy Commissioner of Dhanbad.	The Local Government of Bihar.
3.	Rao Bahadur D. D. Thacker, M.I.M.E., of Messrs. The Pure Jharia Colliery Company, Jharia (Manbhum).	The Indian Mining Federation.
4.	Mr. K. Dutta, of Messrs. J. C. Dutta and Company, Calcutta.	
5.	Mr. B. N. Mondal, of Messrs. B. N. Mondal and Company, Calcutta.	
6.	Mr. N. H. Ojha, Calcutta ..	
7.	Mr. B. K. Roy, Katrasgarh P. O., district Manbhum.	
8.	Mr. K. Basu, of Messrs. North Burrakar Coal Company, Limited, Calcutta.	
9.	Mr. A. L. Ojha, of Messrs. A. L. Ojha, and Company, Limited, Calcutta.	
10.	Mr. R. B. Whitehead, of Messrs. Turner Morrison and Company, Calcutta.	The Indian Mining Association.

H. Dow,
Addl. Secy. to the Govt. of India.

DEPARTMENT OF EDUCATION, HEALTH AND LANDS.

NOTIFICATION.

PUBLIC HEALTH.

Simla, the 30th July 1936.

No. F. 13-5/35-G.—The following draft of certain rules, which it is proposed to make in exercise of the powers conferred by section 8A of the Indian Aircraft Act, 1934 (XXII of 1934), is published as required by section 14 of the said Act, for the information of all persons likely to be affected thereby, and notice is hereby given that the draft will be taken into consideration by the Governor-General in Council on or after the 2nd November 1936.

Any objection or suggestion which may be received from any person with respect to the draft before the said date will be considered by the Governor-General in Council.

Draft Rules.

SECTION I.

SHORT TITLE.

1. These rules may be called the Indian Aircraft (Sanitary Control) Rules, 1936.

DEFINITIONS.

2. In these rules unless there is anything repugnant in the subject or context,

(1) *Authorised aerodrome* means a customs or other aerodrome designated as such by the Governor-General in Council on which aircraft may make their first landing on entering India or from which they may depart on leaving India.

(2) *Sanitary Aerodrome* means an authorised aerodrome declared to be a sanitary aerodrome by the Governor-General in Council by notification in the *Gazette of India*.

(3) *Anti-amaryl Aerodrome* means a sanitary aerodrome which fulfils the following conditions, viz.:—

(*i*) is situated at an adequate distance from the nearest inhabited centre,

(*ii*) is provided with arrangements for a water supply completely protected against mosquitoes and kept as free as possible from mosquitoes by systematic measures for the suppression of breeding places and the destruction of the insects in all stages of development,

(*iii*) is provided with mosquito-proof dwellings for the crews of aircraft and for the staff of the aerodrome,

(*iv*) is provided with a mosquito-proof dwelling in which passengers can be accommodated or hospitalised when necessary.

(4) *Local Area* means a well defined area such as a province, a state, a division, a district, a town, a village, a port, a unit of local Government or an agglomoration, or a part of any of these, whatever may be the extent or population of such and may include a sanitary aerodrome which is so organised that—

(*a*) the entry and exit of any persons are under the supervision and control of the competent authority,

(*b*) in the case of plague, cholera, yellow fever, typhus and small-pox occuring in the surrounding territory, access to the aerodrome by any route other than the air is forbidden to persons suspected of being infected and measures are applied to the satisfaction of the competent authority with a view to preventing persons who are resident in or passing through the aerodrome from being exposed to the risk of infection, either by contact with persons from outside or by any other means

(5) *Infected Local Area.*—For the purpose of these rules a local area shall be considered to be infected by the diseases hereinafter mentioned in the following circumstances:—

(*a*) *Cholera.*—When forming a foyer, that is when the occurrence of new cases outside the immediate surroundings of the first cases proves that the spread of the disease has not been limited to the place where it began.

(*b*) *Plague and Yellow Fever.*—When a first case recognised as non-imported has occurred.

(*c*) *Typhus and Small-Pox.*—When they exist in epidemic form.

(6) *Observation.*—The word observation means the isolation of a person or persons in a suitable place approved by the Health Officer.

(7) *Surveillance.*—The word surveillance means that persons are not isolated, that they move about freely, but that they are notified to the Sanitary Authorities of the several places whither they are bound and are subjected to medical examination with a view to establishing their state of health.

(8) *The period of incubation.*—For the purposes of these rules the period of incubation shall be deemed to be as follows:—

	Days
For Cholera ...	5
For Plague and Yellow Fever ...	6
For Typhus ...	12
For Small-pox ...	14

(9) *Health Officer* means any person appointed by name or by virtue of his office, to be Health Officer of an aerodrome and includes an Additional or Assistant Health Officer and any officer appointed by Government by name or by virtue of his office to perform the duties of a Health Officer of an aerodrome.

(10) *Crew* includes any person having duties on board in connection with the flying or the safety of the flight of the aircraft or employed on board in any way in the service of the aircraft, the passengers or the cargo.

(11) *Day* means an interval of 24 hours.

SECTION II.

RULES OF GENERAL APPLICATION.

3. Every aircraft coming from or proceeding to any place outside India shall carry a journey log-book in which shall be entered—

(*a*) any incidents relevant to public health which have occurred on the aircraft in the course of its voyage;

(*b*) any sanitary measures undergone by the aircraft before departure or at places of call;

(*c*) information concerning the appearance in the local area from which the aircraft departs of any of the infectious diseases mentioned in Rule 2 (5).

4. No person shall throw or let fall from any aircraft any matter capable of producing an outbreak of infectious disease.

5. It shall be lawful for the Health Officer of an aerodrome to make a medical inspection of the passengers and crew of any aircraft on the arrival or departure of such aircraft at or from such aerodrome and if required by the Health Officer the Commander of such aircraft shall at the time of inspection place himself at the disposal of the Health Officer and answer all requests for information relating to public health which are made to him and shall produce for examination if required the journey log-book and any other papers of the aircraft.

6. The Health Officer shall enter under his signature in the journey log-book, on the arrival of an aircraft, any facts of public health importance which have occurred on the aircraft in the course of the voyage and on the departure of an aircraft any sanitary measures applied to the aircraft and also, if the case so requires it, facts concerning the existence of any communicable diseases in the local area during the previous 15 days.

7. The officer in charge of an Aerodrome may on the advice of the Health Officer prohibit the embarkation in any aircraft of any person with symptoms of communicable disease except in the case of the transport of sick persons by aircraft specially allocated for the purpose.

In the absence of a Health Officer the officer in charge of an aerodrome may defer the departure of such persons until the advice of a doctor has been obtained.

8. If the Commander of an aircraft wishes to disembark a sick person he shall, so far as he is able, notify the officer in charge of the aerodrome of arrival in good time before landing.

9. The Health Officer may order the landing from any aircraft of any person who in his opinion shows symptoms of or is suffering from any communicable disease not mentioned in Rule 2 (5) of these rules.

After landing such person the usual measures to prevent the spread of infectious disease in force in the area in which the aerodrome is situated shall be applied.

SECTION III.

RULES APPLICABLE IN CASE OF CERTAIN DISEASES

10. Rules in Section III are applicable to the diseases mentioned in Rule 2(5), *i.e.*, Plague, Cholera, Yellow Fever, Typhus and Small-pox.

Measures on departure.

11. The measures to be applied on the departure of aircraft from a local area infected by one of the diseases mentioned in this Section are the following:—

(1) Thorough cleansing of the aircraft especially the parts liable to be contaminated.

(2) Medical inspection of passengers and crew.

(3) Exclusion of any person showing symptoms of one of the diseases in question; as well as persons in such close relation with the sick as to render them liable to transmit the infection of these diseases.

(4) Inspection of personal effects which shall only be accepted if in a reasonable state of cleanliness.

(5) In the case of plague, deratisation if there is any reason to suspect the presence of rats on board.

(6) In the case of typhus, disinsectisation, limited to persons who after medical inspection are considered as likely to convey infection and to their effects and deratisation if there is any reason to suspect the presence of rats on board.

The aircraft's papers shall be annotated in accordance with the requirements of Rule 2.

Measures on arrival.

12. Subject to the provision of rule 13, aircraft, even when coming from a local area infected by any of the diseases to which this section applies, other than yellow fever, may land at any authorised aerodrome. The only measures applicable at such aerodromes are the medical inspection of passengers and crew and the landing and isolation of sick.

Passengers and crew may not move beyond the limits prescribed by the aerodome authority except with the permission of the Health Officer of the aerodrome.

These restrictions may continue to be imposed on the aircraft at each landing place until it arrives at a Sanitary Aerodrome, where it will be liable to the measures laid down in this section.

In the case of Yellow Fever, all such aircraft shall land only at the Karachi Aerodrome.

13. Notwithstanding anything mentioned in rule 12 the Governor General in Council may by special rules in this behalf, require aircraft coming from particular local areas to land at particular authorised or sanitary aerodromes as prescribed in such special rules.

14. Should an aircraft, on entering India, land elsewhere than on an authorised or sanitary aerodrome, the Commander of the aircraft shall, if the aircraft comes from an infected local area or is itself infected, notify the nearest local authority of such landing and the latter shall take such measures as are appropriate to the circumstances and shall, if possible, direct the aircraft to a Sanitary Aerodrome. No mails or cargo shall be unloaded and no passenger or member of the crew shall leave the vicinity of the aircraft without the permission of the Competent Sanitary Authority.

Special measures applicable in the case of Plague, Cholera, Typhus, Small-pox and Yellow Fever.

(*A*) *Plague.*

15. In the case of aircraft coming from a plague infected local area, the following measures shall, if there has not been a case of plague on board, be applied—

(1) Medical inspection of passengers and crew.

(2) Deratisation and disinsectisation of aircraft, cargo and persons on board if in exceptional cases these operations are considered necessary, with due regard to Rule 31.

(3) The crew and passengers may be subjected to surveillance for a period not exceeding six days from the date on which the aircraft left the infected local area.

16. In the case of Aircraft on which there is on board a recognised or suspected case of plague, the following measures shall apply:—

(1) Medical inspection.

(2) The sick shall be immediately disembarked and isolated.

(3) All persons who have been in contact with the sick and those whom the Health Officer has reason to consider suspect, shall be subject to surveillance for a period not exceeding six days from the date of arrival of aircraft.

(4) Personal effects, linen and any other articles which in the opinion of the Health Officer are infected, shall be disinsectised and, if necessary, disinfected.

(5) Any parts of the aircraft which are suspected of being infected shall be disinsectised.

(6) The Health Officer may carry out deratisation in exceptional cases, if there is any reason to suspect the presence of rats on board with due regard to Rule 31.

17. If the Health Officer considers that effects, mails or cargo coming from an area infected with plague can harbour rats or fleas such effects, mails or cargo may only be discharged on condition that the necessary precautions are taken, as ordered by the Health Officer.

(*B*) *Cholera.*

18. In the case of Aircraft coming from a cholera infected area the following measures shall, if there has not been a case of cholera on board, be applied:—

(1) Medical inspection of passengers and crew.

(2) Surveillance of passengers and crew for a period not exceeding five days from the date on which the aircraft left the infected local area.

19. In the case of an aircraft having on board during the voyage a case of illness presenting clinical signs of cholera the following measures shall be applied:—

(1) Medical inspection.

(2) The sick shall be immediately disembarked and isolated.

(3) The crew and passengers shall be kept under surveillance during a period not exceeding 5 days from the date of arrival of the aircraft.

(4) Personal effects, linen and all other articles which in the opinion of the Health Officer are infected, shall be disinfected.

(5) The parts of the aircraft which have been occupied by the sick or which are regarded as liable to have been infected shall be disinfected.

(6) When the drinking water on board is considered suspect, it shall be disinfected, and, if practicable, emptied out and replaced by wholesome water, after the disinfection of the reservoir and its connections.

(7) Any person arriving by aircraft who wishes to remain in the country shall submit to such chemical or bacteriological examinations, or other measures or obligations as are imposed in this respect on the inhabitants in the local area.

20. The Health Officer may, at his discretion, exempt from surveillance under clause (2) of rule 18 or clause (3) of rule 19 any person who produces evidence to his satisfaction that he has been vaccinated against cholera not more than six months and not less than six days before the date of arrival.

21. The unloading of fresh fish, shell-fish, fruit and vegetables from the aircraft coming from a local area infected with cholera may be prohibited. Any of these articles may be destroyed if considered necessary by the Health Officer.

(*C*) *Typhus.*

22. (*a*) In the case of aircraft coming from a Typhus infected area but where there has not been a case of Typhus on board, no sanitary measures other than as prescribed in Rule 27 may be applied for persons who have within 12 days left that area.

(*b*) In the case of aircraft having a case of Typhus on board the following measures shall be applied:—

(1) Medical inspection.

(2) The sick shall be immediately disembarked and isolated and deloused.

(3) Any person suspected of harbouring lice or having been exposed to infection shall also be deloused, and, may be subjected to surveillance not exceeding 12 days reckoned from the date of delousing.

(4) Linen, personal effects and other articles which the Health Officer considers to be infected shall be disinsectised.

(5) The parts of the aircraft which have been occupied by persons suffering from Typhus and which the Health Officer considers to be infected shall be disinsectised.

(6) Deratisation if there is any reason to suspect the presence of rats on board.

(*D*) *Small-pox.*

23. (*a*) In the case of an aircraft coming from a small-pox infected local area but not having on board a case of smallpox, the measures to which persons and crew who have left that area less than 14 days before the date of arrival of the aircraft and who are considered insufficiently immunised may be subjected without prejudice to the terms of Rule 27, to vaccination or surveillance or vaccination followed by surveillance the period of which shall not exceed 14 days from the date of arrival of the aircraft.

(*b*) In the case of aircraft having a case of smallpox on board, the following measures shall be applied:—

(1) Medical inspection.

(2) The sick shall be immediately disembarked and isolated.

(3) Other persons and crew may be subjected to the measures prescribed in paragraph (*a*) of this rule when the Health Officer considers that they are not sufficiently immunised.

(4) Soiled linen, personal effects and other articles which the Health Officer considers to be contaminated shall be disinfected.

(5) The parts of the aircraft which have been occupied by persons suffering from smallpox and which the Health Officer regards to be contaminated shall be disinfected.

(*c*) For the purposes of this rule persons shall be considered immune:—

(1) if they can produce proof of an attack of smallpox within the past 7 years; or

(2) if they can prove to the satisfaction of the Health Officer that they have been vaccinated not more than 3 years and not less than 12 days prior to the date of arrival; or

(3) they show local signs of early vaccination reaction signifying an adequate immunity.

(*E*) *Special measures applicable in the case of Yellow Fever.*

24. No aircraft which has come from a local area outside India infected with yellow fever and which has alighted in such local area other than in an anti-amaryl aerodrome shall enter India.

25. (1) In the case of aircraft coming from a yellow fever infected area and not coming within the prohibition of Rule 24 the following measures shall be taken in addition to any other measures prescribed by these rules:—

(*a*) Inspection of aircraft and cargo to ensure that they do not carry or contain any mosquitoes.

(*b*) Disinsectisation of the aircraft and cargo.

(2) Medical Examination of passengers and crew to ascertain that they are free from symptoms of yellow fever.

26. Where a person is suspected to be suffering from yellow fever or where it has not been established to the satisfaction of the Health Officer that a person has completed a period of 9 days since possible exposure to infection of yellow fever, such person may be subjected to observation, either within the precincts of the aerodrome or elsewhere under conditions approved by the Health Officer for a period not exceeding 9 days reckoned from the last day on which such person could have been infected.

SECTION IV.

GENERAL RULES.

27. Persons who arrive in aircraft and who have been exposed to risk of infection by one of the diseases referred to in Rule 2 (5) of these rules and who are within the period of incubation, may subject to the provisions in Rules 24, 25, and 26 be subjected to surveillance until the termination of that period.

In the case of cholera and small-pox, the provision of Rules 20 and 23 relating to immunised persons apply equally to action under this rule.

28. Wherever in these rules surveillance is ordered such surveillance may be replaced by observation :—

(*a*) where it is not possible to carry out surveillance with sufficient thoroughness; or

(*b*) if the risk of the introduction of infection into India is considered exceptionally serious; or

(*c*) if the person who would be subject to surveillance cannot furnish adequate sanitary guarantee.

Persons under observation or surveillance shall submit themselves to any examination which the Health Officer may consider necessary.

29. Persons who, on arrival at an aerodrome, are considered liable to surveillance up to the expiration of the period of incubation of any of the diseases mentioned in Rule 2(5) except yellow fever, may nevertheless continue the voyage on condition that the fact is notified to the authorities of subsequent landing places and of the place of arrival either by means of an entry in the journey-log-book or by some other method sufficient to secure that they can be subjected to medical inspection in any subsequent aerodrome on the route.

30. Any person who is liable to observation save a person who is liable thereto by reason of being suspected of or having been exposed to the risk of infection by yellow fever, may at the discretion of the Health Officer be authorised to continue the voyage before the expiration of the period of incubation specified in Rule 2 (8) provided that the approval of the sanitary authorities at the place of his destination is first obtained.

31. In applying sanitary measures to an aircraft coming from an infected local area, the Health Officer shall, to the greatest possible extent, take into account all measures which have already been applied to the aircraft in another sanitary aerodrome abroad or in India and which are duly noted in the journey-log-book.

Aircraft coming from an infected local area which have already been subjected to satisfactory sanitary measures whether in India or another country shall not be subjected to these measures a second time, provided no subsequent incident has occurred which calls for the application of the sanitary measures in question, and that the aircraft has not called at an infected aerodrome except to take in fuel.

32. The aerodrome authority applying sanitary measures shall, whenever requested, furnish free of charge to the Commander of the aircraft, or any other interested person, a certificate specifying the nature of the measures, the methods employed, the parts of the aircraft treated, and the reason why the measures have been applied.

The authority shall also issue, on demand and without charge, to passengers arriving by an aircraft in which a case of one of the infectious diseases referred to in Rule 2 (5) has occurred, a certificate showing the date of their arrival and the measures to which they and their luggage have been subjected.

33. Save as expressly provided in these rules, aircraft shall not be detained for sanitary reasons.

If an aircraft has been occupied by a person suffering from plague, cholera, yellow fever, typhus or smallpox, its detention shall be limited to the period strictly necessary for it to undergo the prophylactic measures applicable to the aircraft in the case of each disease referred to in these rules.

34. Subject to the provisions of Rules 24, 25 and 26 of these rules and particularly those of Rule 25 (*a*) any aircraft which does not wish to submit to the measures prescribed by the aerodrome authority in virtue of the provisions of these rules shall be at liberty to continue its voyage. It shall not, however, land in another aerodrome in India except for the purpose of taking in supplies.

(*b*) An aircraft shall be permitted to land goods on condition that it is isolated and that the goods are subjected to such measures as may be prescribed by the Health Officer in accordance with these rules.

(*c*) Aircraft shall also be permitted to disembark passengers at their request, on condition that such passengers submit to such measures as may be prescribed by the Health Officer in accordance with these rules.

(*d*) Aircraft may also take in fuel, replacements, food and water while remaining in isolation.

35. Whosoever does any act in contravention of any of the provisions of these rules shall be punishable with imprisonment for a term not exceeding three months or with fine which may extend to one thousand rupees or with both.

M. S. A. HYDARI,
Joint Secy. to the Govt. of India.

DEFENCE DEPARTMENT.

Simla, the 1st August 1936

Part B.

No. 538. In exercise of the powers conferred by section 13 of the Indian Territorial Force Act, 1920 (XLVIII of 1920), the Governor General in Council is pleased to direct that the following further amendment shall be made in the Indian Territorial Force Rules, 1921, the same having been previously published as required by sub-section (1) of the said section, namely:—

In the table annexed to sub-rule (1) of rule 12 of the said Rule *for* the entries

"Clause (*e*) of sub rule (2) of Rule 11.	The Officer Commanding the District"

the following entries shall be substituted, namely:

"Clause (*e*) of sub rule (2) of Rule 11	Senior officers The Officer Commanding the District Junior Officers The Commanding Officer"

G. R. F. TOTTENHAM,
Secy. to the Govt. of India

Registered No. C207

The Calcutta Gazette

THURSDAY, AUGUST 13, 1936.

PART IB

Educational Notices.

Chittagong Division.

Chittagong, the 23rd July 1936.

Rules for the admission of private candidates to the Calcutta University Intermediate and B.A. Examinations.

1. Subdivisional Inspectors of Schools, Sub-Inspectors of Schools and *bona fide* teachers of English schools, who have served as such for the full period of three academical years preceding the examinations, will be admitted to the abovementioned examinations.

2. Candidates for the Intermediate and B.A. Examinations must produce certificates of character and length of service from the Secretaries of their respective schools. Candidates for the B.A. Examination must forward with their application their F.A. or I.A. certificates and those for the Intermediate Examination their Entrance or Matriculation certificates. Candidates admitted to a former examination must produce the Registrar's receipt in addition.

3. Under section 19 of the Indian Universities Act, candidates for the Intermediate and B.A. Examinations are informed that their applications for admission to these examinations will not be considered unless they enclose with their applications to this office the sanction of the Senate to appear at the said examinations. Candidates, who have applied for or have obtained the special permission of the Senate for the purpose, are required under section 9, Chapter XV of the Revised Regulations dealing with the registration of University students, to apply at once, to the Registrar for the registration of their names as University students. No person will be deemed a "University student" unless and until his name has been duly registered, and none but "University students" will be eligible for admission to any University Examination other than the Matriculation.

4. The printed form of application should be carefully and correctly filled in and submitted to this office on or before the 18th December 1936 at the latest, together with other papers as mentioned in rules 2 and 3, after which no application will be received.

5. The dates of Intermediate and B.A. Examinations of 1937 may be obtained from the Controller of Examinations, Calcutta University.

B. RAHMAN,
Inspector of Schools,
Chittagong Division (offg.).

Results of the Departmental Examination of Educational Officers in Account Rules and Practice held in June, 1936.

The 3rd August, 1936.

The undermentioned officers of the Education Department have passed the Departmental Examination of Educational Officers in Account Rules and Practice held on the 27th June, 1936:—

(*Arranged alphabetically.*)

Name.	Designation.
Abdul Wajed Khan Choudhuri, Maulvi.	Assistant Head Master, Nawab Bahadur's Institution.
Ansar Ali, Maulvi ..	Assistant Head Master, Comilla Zilla School (officiating).
Bahadur Ali Khan, Maulvi ..	Sub-Inspector of Schools, Ullapara, Pabna.
Ganguly, Babu Satish Chandra	Sub-Inspector of Schools, Narayangarh, Midnapore.
Muhammad Khalilullah, Maulvi	Assistant Inspector of Schools for Muhammadan Education, Rajshahi Division.
Muhammad Sakhawat Hossain	Clerk, Barasat Government High School.
Roy Chowdhury, Babu Monmohan.	Assistant Master, Barrackpore Government High School.
Sarma Adhikari, Babu Kalimohan.	Assistant Master, Chittagong Collegiate School.
Syed Mahbubar Rahim, Maulvi	Head Master, Karaya Moslem Boys' Middle English School, Calcutta.

The undermentioned officers of the Education Department, who failed in the Second Paper in the Examination held on the 29th June, 1935, have passed in that paper in the Examination held on the 27th June, 1936, and are declared to have passed the Departmental Examination:—

(*Arranged alphabetically.*)

Name.	Designation.
Abdul Majid, Maulvi ..	Officiating Assistant Head Master, Dacca Collegiate School.
Chatterji, Babu Nagendranath	Assistant Master, Hooghly Branch School.
Dilwar Hossain, Maulvi ..	Subdivisional Inspector of Schools, Howrah.
Muhammad Gholam Hossain, Maulvi.	Officiating Assistant Inspector of Schools for Muhammadan Education, Chittagong Division.
Ohiduddin Ahmed, Maulvi ..	Subdivisional Inspector of Schools, Khulna.

The undermentioned officer of the Education Department, who failed in the First Paper in the Examination held on the 29th June, 1935, has passed in that paper in the Examination held on the 27th June, 1936, and is declared to have passed the Departmental Examination:—

Name.	Designation.
Muhammad Khorshed Alam, Maulvi.	Sub-Inspector of Schools, Begumganj, Noakhali.

The undermentioned officers of the Education Department have passed in the First Paper but have failed in the Second Paper in the Examination held on the 27th June, 1936. They will be required to take the Second Paper only in the next Examination :—

(*Arranged alphabetically.*)

Name.	Designation.
Acharyya, Babu Ramrenu ..	Assistant Master, Hindu School, Calcutta.
Bhattacharyya, Mrs. Pratibha	Assistant Mistress, Bethune Collegiate School.
Das, Babu Baidyanath ..	Officiating Subdivisional Inspector of Schools, Contai, Midnapore.
Fakhrul Islam, Mr. ..	Subdivisional Inspector of Schools, Alipur Sadar.
Fazlur Rahman Siddiqui, Maulvi	Assistant Master, Calcutta Training School.
Mamgain, Miss Madhuri ..	Head Mistress, Moslem Female Training School, Calcutta.
Muhammad Hashem Ali, Maulvi	Sub-Inspector in charge of Muktabs, Khulna.
Muhammad Khalil, Maulvi ..	Assistant Head Master, Anglo-Persian Department, Calcutta Madrasah.
Mukharji, Babu Haralal ..	Subdivisional Inspector of Schools, Barisal Sadar.
Osman Ghani, Maulvi ..	Officiating Assistant Head Master, Jamalpur Government High School.
Sarkar, Mr. Prafulla Kumar ..	Assistant Head Master, Calcutta Training School.
Sen Gupta, Babu Suresh Chandra	Assistant Master, Hooghly Branch School.

The undermentioned officers of the Education Department have passed in the Second Paper but have failed in the First Paper in the Examination held on the 27th June, 1936. They will be required to take the First Paper only in the next Examination:—

(*Arranged alphabetically.*)

Name.	Designation.
Abdus Sobhan Laskar, Maulvi	Clerk, Bengal Engineering College.
Ghosal, Babu Hriday Ranjan ..	Sub-Inspector of Schools, Barrackpore, 24-Parganas.
Syed Mokaram Ali, Maulvi ..	Subdivisional Inspector of Schools, Madaripur, Faridpur.

J. M. BOTTOMLEY,

Director of Public Instruction, Bengal.

Rajshahi Division.

NOTIFICATION.

Jalpaiguri, the 1st August 1936.

Rules for Examination in the Art and Practice of Teaching.

An examination in the Art and Practice of Teaching for the teachers of subjects taught through the medium of English employed in aided and unaided schools in the Rajshahi Division will be held on the 15th September 1936 and the day following, if required, at the Jalpaiguri Zilla School.

The examination for teachers of all subjects taught through the medium of vernacular and oriental classical languages of secondary schools will also be held at the centre on the dates mentioned above.

2. The following teachers are eligible for examination:—

(*a*) Teachers who have passed the Entrance or the Matriculation Examination or some higher examination of a recognised University. The examination of these teachers will be conducted through the medium of English or vernacular according to their option.

(*b*) Teachers of vernacular subjects who have passed the Middle Scholarship Examination or the terminal examination at the end of the middle stage of instruction or the Junior Madrasah Examination. The examination of these teachers will be conducted only in the vernacular.

(*c*) Pandits and Maulvis employed in teaching oriental classical languages other than Pandits in Sanskrit Tols and Maulvis in Madrasahs. They may be permitted to appear at the examination and at their option may be examined either in English or in vernacular.

3. The examination will consist of—

(*a*) A practical test in class control, the candidate being required to keep a class of at least a dozen boys attentive and fully occupied throughout a lesson.

(*b*) A practical test in teaching ability, the candidate being required to give two lessons on any two of the following subjects:—

(*i*) Science, Nature Study, Hygiene, English, Bengali, History, Geography, Arithmetic, Algebra or Geometry.

(*ii*) A written test for one and a half hours in which the Inspector of Schools or other examiners will set questions an the art of teaching, object lesson, class management, organisation and discipline.

4 The following books are recommended:—

(*a*) *For teachers teaching through the medium of vernacular—*

(1) Teachers' Manual by Khan Bahadur Ahsanullah.
(2) Bidyalaya Bisayak Bibidha Bidhan by A. N. Adhikari.
(3) Sikha Bijnan by Khan Bahadur Abdur Rahman Khan.
(4) Byabaharik Manobijnan by S. C. Brahmachari.
(5) Padtika Likhibar Paddhati by Jagannath Dey.

(*b*) *For Matriculate and I.A. passed teachers teaching through the medium of English—*

(1) Talks to Teachers (James).
(2) Mental and Physical Life of School Children by Sandiford.
(3) The Play Way by Cook.
(4) Indian School Organisation by P. Wren.
(5) Indian Teachers' Guide by P. Wren.
(6) Suggestions for the consideration of Teachers—Board of Education, London.
(7) Art of Teaching by Salmon.

(*c*) *For graduate teachers teaching through the medium of English—*

Nos. (1), (2), (4), (5) and (6) under Group (*b*), and the following books:—

(1) Education on Dalton Plan by Parkhurst.
(2) Principles of Education by Ruediger —George G. Harrap & Co., London.
(3) General Methods of Teaching—By Parker-Ginn & Co.

5. Intending candidates from High Schools, Government, aided and unaided, should send in their applications to this office through the Head Masters of the respective schools in which they are employed at least one month before the date of examination and teachers of Middle Schools and Junior Madrasahs through the District Inspector of Schools at least four weeks before the date. Every candidate will be required to produce his University or other certificates at the time of examination. A statement containing information on the following points should accompany the application:—

(1) Name in full.
(2) Father's name in full.
(3) Age on the 1st September 1936.
(4) Native district, subdivision, village, post office.
(5) The last examination which the candidate passed and the year of passing.
(6) Period of service as a teacher.
(7) Present appointment with date (mention whether he is a teacher of English subjects or vernacular subjects or of oriental languages). Mention also the language through the medium of which the candidate wants to be examined.
(8) Two class subjects which the candidate wishes to offer for practical test in teaching.
(9) Signature of the candidate.

6. Every candidate must bring with him at the time of examination two lesson notes on the subjects in which he wishes to give lessons. These notes should be made over to the examiner at the time of the practical examination.

Candidates should state whether they sat for the examination previously, if so, how often, giving dates.

P. C. MUKHERJI,
Inspector of Schools, Rajshahi Division.

Calcutta University.

Senate House, the 8th August 1936.

ERRATA LIST.

1. In the list of successful candidates at the B.Com. Examination, 1936, published in the *Calcutta Gazette*, dated the 16th July 1936

(a) on page 1166, for

"University B. Com Class.

Chaudhuri, Purenduprakas"

please read

"University B.Com Class.

Chaudhuri, Purenduprakas";

(b) on page 1167, for

"Non-Collegiate Student (University B.Com. Class).

Dattagupta, Sudhirkumar"

please read

"Non Collegiate Student (University B.Com. Class).

Dattagupta, Subirdkumar".

2. In the list of successful candidates at the B.A. Examination, 1936, published in the *Calcutta Gazette*, dated the 25th June 1936—

(a) on page 1065, for

"51 Ardal, Amy .. Loreto House"

please read

"51 Avdall, Amy .. Loreto House" ;

(b) on page 1088, for

"Mukhopadhyay, Rabindranath .. Vidyasagar College"

please read

"Mukhopadhyay, Rabindranath, II Vidyasagar College."

3. In the list of successful candidates at the Matriculation Examination, 1936, published in the *Calcutta Gazette*, dated the 18th June 1936

(a) on page 883, for

"Cal. 715 Basan Kumar Birla (M) .. 15 First" and
"Cal. 757 Kedarnath Adhya .. 18-1 First"

please read, respectively,

"Cal. 715 Basant Kumar Birla (M) .. 15 First" and
"Cal. 757 Kedarnath Adhya .. 16-1 First";

(b) on page 913, for

"Bhow. F. P. 131 Jyotiprabha De (V) .. First "

please read

"Bhow. F. P. 131 Jyotiprabha Deb (V) .. First";

(c) *on page 925, for*

"Karim, 49 Edward Bryan Badhali .. 17-1 Second"

please read

"Karim, 49 Edward Bryan Badshah .. 17-1 Second";

(d) *on page 932, for*

"Asan, 53 Deibdas Ghosh .. 17-5 Second"

please read

"Asan, 53 Debdas Ghosh .. 17-5 Second";

(e) *on page 955, for*

"Com, 47 Md. Fazal Islam .. 22-7 Second"

please read

"Com, 47 Md. Tazal Islam .. 22-7 Second";

(f) *on page 960, for*

"Dar, T. 2 Jashapi Namgyal .. 16-2 Passed"

please read

"Dar, T. 2 Tashi Namgyal .. 16-2 Passed";

(g) *on page 983,*

the entries bearing Roll numbers Kri. 76 to Kri. 90 should be read under the heading

"Nabadwip Hindu School",

and not under the heading,

"Muragacha H. E. School" or

"Nabadwip Bakultala H. E. School" (as published erroneously in an Errata List issued in the *Calcutta Gazette*, dated the 16th July 1936).

4. In the list of successful candidates at the Matriculation Examination, 1936, published in an Addenda List issued in the *Calcutta Gazette*, dated the 16th July 1936, on page 1196—

for

"Cal. 2064 Jose Felippe Foreato .. 24 Second"

please read

"Cal 2064 Jose Felippe Torcato .. 24 Second".

5. In the list of successful candidates at the I.A. Examination, 1936, published in the *Calcutta Gazette*, dated the 28th May 1936, on page 695—

for

"Khandker Abdur Rob .. Contai P. K. College (Non-collegiate in Arabic)"

please read

"Khandker Abdur Rob .. Non-Collegiate Student (Contai P. K. College)".

B. B. DUTT,
Controller of Examinations.

Orders by the Vice-Chancellor and Syndicate of the Calcutta University.

NOTIFICATION No. T. 447.

English Teachership Certificate Examination.

The examination for English Teachership Certificate shall be held twice in each year ordinarily in January and July. The date of the first examination will be notified later.

A candidate for the examination must have passed the Intermediate Examination and have served in a recognised school as a teacher for at least one year prior to the examination. Provided, however, that if the candidate has already graduated in any Faculty he will be allowed to appear at the examination without being required to serve as a teacher.

A candidate shall also produce a certificate to show that he has undergone for at least eight weeks (which need not be consecutive) a special short course of training organised or recognised by the University for the purpose. Until further orders attendance at the short training course for three months organised by the University with Methods of teaching English as one of the subjects will be considered sufficient for purposes of his admission to the examination.

Every candidate for admission to the examination shall send his application to the Registrar with a certificate in the prescribed form and a fee of Rs. 10 not less than two months before the date fixed for the commencement of the examination.

The examination shall be written, oral and practical, and shall be conducted on the lines of the following syllabus:

(A) Written Examination ... ... 150 marks.

There shall be one paper with two halves each of two hours and each carrying 75 marks.

The subject for the written examination shall consist of—

(*i*) Method of teaching English in India.

(*ii*) Elementary Phonetics of English.

(*iii*) Detailed knowledge of English Grammar.

(*iv*) English Composition in the form of short essays on subjects occurring in a number of selected texts and translation.

The marks for the written paper shall be distributed as follows:—

	Marks.
First half—	
Method of teaching English	50
Phonetics	25
Second half—	
Grammar	25
Composition	30
Translation	20
	150

(B) Oral Examination ... ... 150 marks

The oral examination will be held mainly with a view to testing the candidate's ability to read English Prose and Poetry and his ability to carry on an ordinary conversation in English.

(C) Practical Examination ... ... 200 marks

The practical examination will be held with a view to testing the candidate's ability to teach English in any of the classes of a recognised high school.

Note 1.—Special regulations for persons who had been teachers in recognised high schools on 31st March 1935.

Notwithstanding anything contained in the foregoing rules, all persons who had been teachers *in English* in recognised high schools on 31st March 1935 will be entitled to appear at the English Teachership Certificate Examination after having undergone training as specified above.

Note 2.—Exemption from written portion of the examination:

1. The following teachers who have been in service in recognised schools on 31st March 1935 shall be exempted from appearing at the written portion of the examination:—

(*i*) Head Masters of recognised schools.

(*ii*) All Assistant Head Masters and assistant teachers who have served as teachers of English in recognised schools.

2. Graduates who obtained not less than 50 per cent. marks in the aggregate in English in their B.A. Examination may also be exempted from appearing at the written portion of the examination even if they have not served as teachers.

The following books are prescribed to be read for the examination:—

(*i*) *Method of teaching English.*

Wyatt and Thomson—The teaching of English in India.

(*ii*) *Phonetics.*

(1) Harold E. Palmer—A First Course of English Phonetics.
(2) S. K. Chatterjee—A Brief Sketch of Bengali Phonetics.

(*iii*) *Grammar.*

E. A. Sonnenschein—A New English Grammar (Oxford University Press).

(*iv*) *Composition.*

(1) Modern Prose—Elizabeth D'Oyley (Edward Arnold).

(2) Modern Poetry—Elizabeth D'Oyley (Edward Arnold).

(Questions of a general nature only will be set from the above books.)

J. CHAKRAVORTI, *Registrar.*

Board of Intermediate and Secondary Education, Dacca.

NOTIFICATION No. 5224.

The 29th July 1936.

Rules for the admission of private candidates to the High School Examination of the Board, 1937.

High School Examination.

1. Every private candidate must produce a certificate from a responsible Government officer to the effect: (*1*) that he has not attended any recognised school for at least one year previous to the examination, (*2*) that his conduct and character have been good, (*3*) that he has diligently and regularly prosecuted his studies after leaving school and has been subject to proper discipline.

2. A student who failed to pass the annual examination for promotion to class VII or to any higher class and then left the school will not ordinarily be allowed to appear at a Test Examination before the year in which he would have been due for it had he continued his studies in school.

3. Every private candidate must submit his application for admission to the Test Examination on or before the 3rd November 1936 in the prescribed form which may be obtained from the office of the Board.

4. Every private candidate must also forward, in original, with his application for permission to appear at the Test Examination, his transfer certificate from the school (if any) in which he last read or the Registrar's or the Secretary's receipt for the fee paid in the case of those candidates who previously appeared at the Matriculation or the High School Examination.

5. In the case of a candidate, who has never attended any school, the following documents must accompany his application:—

(*1*) A certificate from a respectable person other than a relative with personal knowledge of the facts of the case that he has never been to any school.

(*2*) An affidavit sworn by the parent or guardian before a competent court that he has not attended any school.

(*3*) A documentary evidence (such as a horoscope and an affidavit sworn by the parent or guardian before a competent court) regarding the age of the candidate.

6. Every private candidate shall state in full along with his application for permission to appear at the Test Examination his name, father's name, guardian's name, date of birth, residence, postal address, thana, and district, whether he appeared at any previous High School or Matriculation Examination and the following particulars:—

(*a*) Vernacular language for composition.

(*b*) Vernacular language from which translation is to be made into English.

(*c*) Which *one* of the following subjects taken up:—

(*i*) Additional Mathematics.

(*ii*) Classical Language.

(*iii*) Hygiene.

(*iv*) General Science.

7. Private candidates offering Hygiene or General Science as one of their subjects are required to produce a certificate of training in case of Hygiene from a recognised medical practitioner or from a recognised teacher in the subject, and in case of General Science from a recognised teacher in the subject.

8. Every private candidate must pay a fee of Rs. 3 to the Headmaster of the school at which he appears at the Test Examination. In no circumstances will this fee be refunded.

9. On the first day of the Test Examination only, he must be accompanied for the purpose of identification, by some person known to the Headmaster of the school. Otherwise he will not be admitted to the examination.

10. The High School Examination will be held in the month of March. The dates of the examination will be notified in the *Calcutta Gazette*.

11. The Test and the High School Examination will be conducted according to the regulations, courses and syllabuses of the Board as embodied in its calendar for 1921-25 which may be had from the office of the Board for Rs. 3-11 including postage.

J. N. ROY, *Secretary (offg.)*.

Board of Intermediate and Secondary Education, Dacca.

High School Examination.

Form of application for private candidates.

(This application must reach the office of the Secretary to the Board of Intermediate and Secondary Education, Dacca, on or before the 3rd November 1936.)

APPLICATION.

To

The Secretary, Board of Intermediate and Secondary Education, Dacca.

SIR,

I request permission to present myself at the Test Examination of private candidates for admission to the High School Examination to be held by the Board of Intermediate and Secondary Education, Dacca, in 1937.

Particulars required under the rules are given in the enclosed statement.

I am,

Sir,

Yours obediently,

Dated

.....

Present address:—

Village.....

Post.....

District.....

N.B.—Candidates should carefully read the "Rules for the admission of private candidates" as incomplete applications will not be considered.

Board of Intermediate and Secondary Education, Dacca.

NOTIFICATION No. 5225.

The 29th July 1936.

Rules for the admission of private candidates to the High Madrasa Examination of the Board, 1937.

High Madrasa Examination.

1. Every private candidate must produce a certificate from a responsible Government officer to the effect: (*1*) that he has not attended any recognised madrasa for at least one year previous to the examination, (*2*) that his conduct and character have been good, (*3*) that he has diligently and regularly prosecuted his studies after leaving madrasa and has been subject to proper discipline.

2. A student, who failed to pass the Junior Madrasa Examination or the annual examination for promotion to class VIII or to any higher class and then left the institution, will not ordinarily be allowed to appear at a Test Examination before the year in which he would have been due for it had he continued his studies in a madrasa.

3. Every private candidate must submit his application for admission to the Test Examination on or before the 3rd November 1936 in the prescribed form which may be obtained from the office of the Board.

4. Every private candidate must also forward, in original, with his application for permission to appear at the Test Examination, his transfer certificate from the madrasa (if any) in which he last read, or the Director of Public Instruction's or the Secretary's receipt for the fee paid in the case of those candidates who previously appeared at the Special Islamic Matriculation or the High Madrasa Examination.

5. In the case of a candidate, who has never attended any madrasa, the following documents must accompany his application: —

(1) A certificate from a respectable person other than a relative with personal knowledge of the facts of the case that he has never been to any madrasa.

(2) An affidavit sworn by the parent or guardian before a competent court that he has not attended any madrasa.

(3) A documentary evidence (such as an affidavit sworn by the parent or guardian before a competent court) regarding the age of the candidate.

6. Every private candidate shall state in full along with his application for permission to appear at the Test Examination his name, father's name, guardian's name, date of birth, residence, postal address, thana, and district whether he appeared at any previous High Madrasa Examination and the name of the madrasa at which he intends to appear at the Test Examination and the following particulars: —

(*a*) Vernacular language for composition.

(*b*) Vernacular language from which translation is to be made into English.

(*c*) Which *one* of the following subjects taken up: —

(*i*) Islamic History,

(*ii*) General History,

(*iii*) Additional Mathematics.

7. Every private candidate must pay a fee of Rs. 3 to the Principal or Superintendent of the madrasa at which he appears at the Test Examination. In no circumstances will this fee be refunded.

8. On the first day of the Test Examination only, he must be accompanied, for the purpose of identification, by some person known to the Principal or Superintendent of the madrasa. Otherwise he will not be admitted to the examination.

9. The High Madrasa Examination will be held in the month of March. The dates of the examination will be notified in the *Calcutta Gazette*.

10. The Test and the High Madrasa Examination will be conducted according to the regulations, courses and syllabuses of the Board as embodied in its calendar for 1921-25, which may be had from the office of the Board for Rs. 3-11 including postage.

J. N. ROY, *Secretary (offg.)*.

Board of Intermediate and Secondary Education, Dacca.

High Madrasa Examination.

Form of application for private candidates.

(This application must reach the office of the Secretary to the Board of Intermediate and Secondary Education, Dacca, on or before the 3rd November 1936.)

APPLICATION.

To

The Secretary, Board of Intermediate and Secondary Education, Dacca.

SIR,

I request permission to present myself at the Test Examination of private candidates for admission to the High Madrasa Examination of the Board of Intermediate and Secondary Education, Dacca, in 1937.

Particulars required under the rules are given in the enclosed statement.

I am,

Sir,

Yours obediently,

Dated

....

Present address:—

Village.. .....

Post..... .....

District.....

N.B.—Candidates should carefully read the "Rules for the admission of private candidates" as incomplete applications will not be considered.

Orders by the Vice-Chancellor and Syndicate of the Calcutta University.

Senate House, the 13th August 1936.

The undermentioned examinations will commence on the dates as noted below. The last dates for submission of applications and fees for admission to these examinations are noted against them :—

Examination.	Commencing dates.	Last date for submission of applications and fees.
I.A. and I.Sc. Examinations, 1937 ..	Thursday, 18th February 1937	Friday, 8th January 1937.
Matriculation Examination, 1937 ..	Monday, 15th March 1937 ..	Tuesday, 19th January 1937.
B.A. and B.Sc. Examinations, 1937 ..	Tuesday, 30th March 1937 ..	Friday 12th February 1937.

B. B. DUTT,
Controller of Examinations.

Orders by the Vice-Chancellor and Syndicate of the Calcutta University.

Senate House, the 6th August 1936.

The examination of the undermentioned Matriculation candidates for 1936 is cancelled and they are debarred from appearing at the Matriculation Examination of this University in 1937 and 1938:—

Calcutta Model Academy.

Santibhushan Dasgupta (Roll Cal. 3176).
Pulinkrishna Deb (Roll Cal. 3186).
Ramdeo Prasad (Roll Cal. 3206).
Dakhalraj Sharma (Roll Cal. 3213).
Gaurishankar Ojha (Roll Cal. 3221).
Lakshman Jha (Roll Cal. 3276).
Raghunath Prasad Sinha (Roll Cal. 3283).
Lalla Bacchhu Prasad Shrivastabya (Roll Cal. 3284).
Nazir Ahmed (Roll Cal. 3293).
Abdul Qaiyum Khan (Roll Cal. 3295).
S. Qamrul Hassan (Roll Cal. 3297).
Jugal Kishore Prasad (Roll Cal. 3312).
Samarendranath Ghosh (Roll Cal. 4888).
Gulabchand Bhagat (Roll Cal. 4890).
Malik Ekram Rahmani (Roll Cal. 4893).

B. B. DUTT,
Controller of Examinations.

ERRATUM.

Results of the Sub-Overseer Examination, 1936, published in the "Calcutta Gazette," dated the 16th July 1936, page 1150, Part IB.

Read

Roll No. 144—Santi Ranjan Roy—Dacca

for

Roll No. 144—Santi Ranjan Roy (*a*)—Dacca.

A. N. SEN, *Secy.*,
Overseer Examination Board, Bengal.

University of Dacca.

Ramna, Dacca, the 7th August 1936.

NOTIFICATION.

Re Supplementary University Test Examination in English Composition.

It is hereby notified that a Supplementary University Test Examination in English Composition will be held on Wednesday, the 2nd September 1936, from 11 a.m. to 2 p.m. in the Examination Hall in the University Central Buildings.

The Test will be held for those candidates only whose results for the B.A. (Pass and Honours) and B.Com. Examinations have not yet been published for not passing the University Test Examination in English Composition.

Intending candidates for the Supplementary Test must submit their Examination Entry forms for permission to appear at the Test duly countersigned by the Provosts of the Halls concerned and the prescribed examination fee of Rs. 10 together with the fee of Rs. 5 for retaining their names on the University roll for the session 1936-37, to the Accounts Section of the University by Friday, the 28th August 1936, at the latest. No fee for the Test will be accepted after that date. The retention fee for the previous session, if any, in arrears, must also be paid.

N. AHMAD, *Registrar.*

Office of the Director of Public Instruction, Bengal.

NOTIFICATION.

Calcutta, the 6th August 1936.

The research scholarship of Rs. 75 a month awarded to Santosh Kumar Chakrabarti for a period of one year with effect from the 1st July 1936 in this office notification, dated the 29th June 1936, is hereby withdrawn with effect from the 1st August 1936, and is re-awarded to the undermentioned candidate for a period of eleven months with effect from the 1st August 1936:—

Adris Chandra Banerji.

Subject of research—

Mediaeval History, with special reference to the subject of early Muslim Rule in Bengal.

Place of work—

Indian Museum, Calcutta.

J. M. BOTTOMLEY,
Director of Public Instrn., Bengal.

Registered No. C207

The Calcutta Gazette

THURSDAY, AUGUST 13, 1936.

PART II

Advertisements.

Notices

Advertisements, Notices, etc., intended for insertion in this part of the Gazette must be sent to Press before 12 noon on Saturday, and all costs deposited and proofs returned by 4 p.m. on Monday. Manuscripts and postal remittances must be addressed to Superintendent, Government Printing (Publication Branch), Bengal Government Press, Alipore.

For the convenience of advertisers located in Calcutta, arrangements have been made to accept advertisements and prepayment of charges at Sales Office, Ground Floor, Writers' Buildings, Calcutta. The latest time for receipt of advertisements for current week's Gazette has been extended till 4 p.m. on Mondays.

PROCLAMATION OF SALE.

Order 21, rule 66, C. P. C.

In the Court of the Sub-Judge at Noakhali.

O. C. EXECUTION CASE No. 85 OF 1936.

Date of sale—14th September 1936, at 12 noon.

Decretal claim—Rs. 50,370-1-2p.

Dhirendra Chandra Roy, trustee for Sreemati Sindhu Bala Devi, decree-holder

versus

(1) Kshitish Chandra Acharya Choudhury, (2) Raja Janaki Nath Roy, (3) Jadu Nath Roy, (4) Priya Nath Roy, judgement-debtors.

Schedule of property to be sold.

THE 16 annas share of zemindary interest of Tapa Joynagar, Tarap Gopalnagar, Tauzi No. 32 of the Noakhali Collectorate, bearing annual revenue of Rs. 9,694-8-9, mahals whereof are situated in the districts of Noakhali and Tipperah, and under the above zemindary separated 9 annas share of pargana Bhulua, Tape Ashtahajari, taluk Banani Gurudas Chakravarty, by auction-purchase Gour Mohan Roy Pesker, Mudafat Ramballav Roy, together with all rights appertaining to those interests.

Valuation as estimated by the Court, Rs. 25,000.

(The decree-holder Sm. Sindhu Bala Devi has a maintenance charge of Rs. 850 per month upon the above property during her life-time only, created under a registered Mashahara Patra, dated 8th Srahan, 1312 B. S., and the same in arrears since Asar, 1341 B.S.)

S. C. SEN, Sub-Judge.

Noakhali, the 31st July 1936. (1635—1)

In the Court of the Deputy Collector (3rd Court), Deoghar, Santal Parganas.

RENT SUIT No. 99 OF 1935.

To Srimati Saratsasi Devi.

WHEREAS the Receiver of Rohini estate has instituted a suit against you for arrears of rent for your holding in mauza Bariarbandhi Bompus town, you are directed to appear before this Court on 28th of August 1936 failing which the case will be heard and decided ex parte.

Given under my hand and seal of this Court the 8th June 1936.

S. A. ASHRAF, Deputy Collector. (1648—2)

Insolvent Estates.

Half-yearly statements made up to 31st July 1933.

Estates	Whole amount of receipts.	Whole disbursements.		Balance.	Portion of balance applicable to dividends now payable.	Net balance.	Transfers to unclaimed dividend account under rule 175 and section 122 of the P. T. I. Act of 1909.	Probable outturn of the dependencies.
		Dividends paid.	Other payments.					
	Rs. a. p.	Rs. a. p.	Rs. a. p.	Rs. a. p.	Rs. a. p.	Rs. a. p.	Rs. a. p.	
Assaram Balkissen	5,886 11 6	3,118 4 4	2,380 8 7	387 14 7	....	387 14 7	2,112 6 1	Nothing further recoverable.
Annadaprosad Nag (212 of 1912) ..	3,479 3 11	2,640 8 2	477 7 4	361 4 5	....	202 5 4	No. 3. 158 15 1	Ditto.
Akhoy Kumar Auddy and Pulin Behary Auddy.	4,624 11 4	....	1,303 5 11	3,321 5 5	....	3,321 5 5	No. 2.	Ditto.
Abinash Chunder Sarcar	549 3 0	....	147 4 9	401 14 3	....	401 14 3	....	Ditto.
Ambica Charun Chuckerbutty (32 of 1914)	6,680 13 6	4,168 6 6	535 2 5	1,977 4 7	....	197 5 7	1,779 15 0	Ditto.
Albini Gustave	5,201 0 0	4,489 6 8	595 15 6	115 9 10	....	115 9 10	No. 2. 212 5 0	Ditto.
Adaito Charun Khatowa and Gosto Behary Chuckerbutty.	11,087 9 6	9 6 9	10,911 4 7	166 14 2	....	166 14 2	No. 3. 4 11 6	Ditto.
Ani Chand and another (Anichand Narain-dass) (99 of 1915).	12,766 15 0	10,708 15 2	1,491 9 0	566 6 10	....	....	No. 3. E. B.— 55 4 10 511 2 0 No. 2. 2,976 5 2	Ditto.
Ashutosh Dutt & Co (Hem Ch. Sen) (14 of 1916)	4,626 9 9	3,337 11 8	488 1 10	800 12 3	....	150 12 8	No. 3. 649 15 7	Ditto.
Alexander, Walter Edward (37 of 1916) ..	5,573 4 5	1,925 2 10	458 10 2	3,189 7 5	....	31 10 7	No. 2. E. B.— 71 14 10 3,085 14 0	Ditto.
Anundmoy Dutt and Ram Kumar Dutt ..	5,192 13 1	1,468 14 8	2,091 15 10	1,631 14 7	....	48 12 2	No. 2. 1,583 2 5	Ditto.
							No. 2.	

Anantram (52 of 1919)	8,150 0 0	5,550 3 9	2,362 1 3	237 11 0	....	3 10 0	234 1 0	Ditto.
							No. 2.	
Ah Hoe	6,617 0 0	4,740 12 8	392 12 6	1,483 6 10	....	494 6 10	989 0 0	Ditto.
							No. 2.	
Amulya Charan Sett	6,814 3 6	505 14 6	1,830 9 4	4,477 11 8	....	4,477 11 8	....	Ditto.
Abdul Huq (22 of 1921)	3,705 9 3	1,919 10 5	357 10 1	1,428 4 9	....	99 3 3	1,329 1 6	Ditto.
							No. 2.	
Aklas Ahmed & Co.	17,126 0 0	10,518 12 6	2,591 4 1	4,016 9 0	1,792 9 10	341 15 8	1,881 15 6	Ditto.
							No. 2.	
Abdul Majid (206 of 1921)	1,414 14 3	....	856 5 8	558 8 7	....	558 8 7	....	Ditto.
Ahsing, E. J.	626 3 5	460 0 0	107 15 2	58 4 3	....	....	58 4 3	Ditto.
Amrita Lall Dey (14 of 1922) ..	1,411 15 0	878 14 4	141 11 4	391 5 4	....	40 5 4	351 0 0	Ditto.
							No. 2.	
Abdul Samad	11,240 7 2	300 0 9	5,810 8 11	5,129 14 3	....	5,129 14 3	....	Ditto.
Ashfaqur Rohomon	4,586 4 6	2,992 9 1	783 14 2	809 13 3	....	809 13 3	....	Ditto.
Ahmed Ebrahim Salajee (184 of 1911) ..	1,09,629 14 6	95,935 14 10	10,054 5 9	3,639 9 11	469 11 2	3,169 14 9	....	Ditto.
Abdul Samad (Abdul Samad Johiruddin) (139 of 1922).	3,106 6 2	....	259 5 2	2,847 1 0	....	2,847 1 0	....	Ditto.
Anath Nath Dey	2,443 1 3	1,672 12 6	495 3 7	275 1 2	....	85 9 9	189 7 5	Ditto.
							No. 2.	
Abdul Huq Samiruddin (Safi Abdul Haq Samiruddin).	3,756 15 2	2,467 4 11	807 13 0	481 13 3	....	481 13 3	....	Ditto.
Akbar Ali D. S. Muradwalla & Co.) ..	4,554 3 6	....	941 9 5	3,612 10 1	....	3,612 10 1	....	Ditto.
Adshead, Donald Edward	1,254 4 0	774 8 5	144 7 11	335 3 8	....	180 3 2	155 0 6	Ditto.
							No. 2.	
Amarendra Chundra Chundra ..	680 0 0	....	126 7 1	553 8 11	247 8 0	306 0 11	....	Ditto.
Abraham, Ezra Jacob Abraham ..	741 15 3	....	96 8 5	645 6 10	....	645 6 10	....	Ditto.
Andrews, Percival Thomas	830 0 0	495 10 0	116 4 0	218 2 0	....	218 2 0	....	Ditto.
Abad Behary Lall Lala *alias* Behary Lall Lala (1 of 1927).	2,200 0 0	1,557 15 0	191 9 2	450 7 10	439 13 0	10 10 10	....	Ditto.
Amitava Ghose (205 of 1927)	1,183 2 9	....	156 0 8	1,027 2 1	856 6 0	170 12 1	....	Ditto.
Asrhoff Osman Jamal (154 of 1928) ..	11,265 0 0	....	4,729 12 9	6,535 3 3	....	6,535 3 3	....	Ditto.
Austin, Charles Edward (62 of 1929) ..	800 8 0	282 15 2	114 3 11	403 4 11	23 0 5	380 4 6	....	Ditto.
Abinash Chunder Shome	219 13 8	....	111 0 11	108 12 9	....	108 12 9	....	Ditto.
Aswini Kumar Chuckerbutty and Nogendra Nath Chuckerbutty (74 of 1930).	4,195 13 0	....	1,655 6 3	2,540 6 9	....	2,540 6 9	....	Ditto.
Attar Sing Moolsing and Labhu Ram (146 of 1930).	24,650 0 6	....	1,979 0 3	22,671 0 3	....	22,671 0 3	....	Ditto.
Arun Chandra Sinha	75 0 0	....	....	75 0 0	....	75 0 0	....	Ditto.
Abdul Kahar Mirday (79 of 1931) ..	3,592 13 3	991 8 1	690 7 7	1,910 13 7	1,391 3 8	519 9 11	....	Ditto.
Audsley, Charles Edward (178 of 1931) ..	890 0 0	....	198 15 7	781 0 5	602 14 0	178 2 5	....	Ditto.
Alchin, Archibald John (202 of 1931) ..	380 8 0	....	71 4 3	309 3 9	....	309 3 9	....	Ditto.
Awdry, Albert Charles (216 of 1931) ..	330 8 0	....	57 15 9	272 8 3	....	272 8 3	....	Ditto.
Abdul Gani Meah (222 of 1931) ..	225 8 0	....	52 8 8	772 15 4	....	172 15 4	....	Ditto.
Abdul Razak Abdul Shovan (64 of 1932) ..	387 14 2	....	218 8 6	169 5 8	....	169 5 8	....	Ditto.
Anderson, Ernest Dennett (101 of 1932) ..	188 6 6	....	87 5 5	101 1 1	....	101 1 1	....	Outstanding in course of recovery.

Estates.	Whole amount of receipts.	Whole disbursements.		Balance.	Portion of balance applicable to dividends now payable.	Net balance.	Transfers to unclaimed dividend account under rule 175 and section 122 of the P. T. I. Act of 1909.	Probable outturn of the dependencies.
		Dividends paid.	Other payments.					
	Rs. a. p.	Rs. a. p.	Rs. a. p.	Rs. a. p.	Rs. a. p.	Rs. a. p.	Rs. a. p.	
Agacey, Edward Joseph	650 0 0	480 7 4	66 14 6	102 10 2	....	....	E. B.— 26 6 2 76 4 0	Nothing further recoverable.
Abdul Gani Meah (51 of 1933) ..	275 0 0	....	....	275 0 0	....	275 0 0	No. 2.	Outstanding in course of recovery.
Akbar Ali Hossain Ali (92 of 1933) ..	50 0 0	....	28 13 0	21 3 0	....	21 3 0	....	Ditto.
Begraj Tularam	3,000 0 0	1,747 13 3	506 9 8	745 9 1	....	745 9 1	....	Nothing further recoverable.
Benode Behary Sirkar and others ..	1,497 2 3	.. ..	926 13 6	570 4 9	....	570 4 9	....	Ditto.
Buldeodas Periwal and others ..	42,572 13 1	22,880 1 6	17,214 6 3	2,478 5 4	....	1,084 7 4	1,393 14 0	Ditto.
							No. 2. 2,813 12 5	
Behary Lall Dutt	1,252 11 6	....	84 2 2	1,168 9 4	....	1,168 9 4	No. 3.	Ditto.
Behary Lall Ramessur	40,858 4 0	31,300 15 9	6,637 13 4	2,919 6 11	....	2,099 11 2	E. B.— 74 8 7 745 3 2	Ditto.
Bhola Nath Ganguly	5,141 13 11	3,264 9 2	1,769 11 1	107 9 8	....	41 8 4	No. 2. 66 1 4	Ditto.
							No. 2. 608 15 8	
Burke, Walter Charles	4,462 13 10	3,670 11 8	457 8 7	334 9 7	....	334 9 7	No. 3. 736 12 8	Ditto.
Bipro Das Daw	594 9 6	....	124 14 0	469 11 6	....	469 11 6	No. 3.	Ditto.
Betts, C. C. and H. L.	856 2 0	....	133 3 10	722 14 2	....	722 14 2	....	Ditto.
Balkissen Jhawar (Balkissen Sreekissen Saligram Ganga Sahai Balkissen).	5,297 4 6	2,447 12 5	2,483 4 1	366 4 0	....	366 4 0	1,123 2 5	Ditto.
Barbar, Frederick	505 6 0	....	127 7 7	377 14 5	....	377 14 5	No. 3.	Ditto.
Bojo Lall Mukerjee	4,708 5 0	3,361 10 9	490 0 7	856 9 8	....	545 9 0	311 0 8	Ditto.
Batuk Nath and another	4,120 6 3	....	2,947 0 9	1,173 5 6	....	1,173 5 6	No. 2.	Ditto.
Bhagobut Chunder Nundy and another (Gangahari Nandy).	4,367 0 6	56 0 0	1,863 0 2	2,448 0 4	....	2,448 0 4	....	Ditto.

Bux, Ellahi	12,320 9 9	7,853 12 6	4,420 4 4	46 8 11	....	....	E. B.— 46 8 11 1,756 0 2	Ditto.
							No. 3.	
Beepin Behary Ghosh (112 of 1915) ..	933 6 0	....	82 15 2	850 6 10	....	850 6 10	....	Ditto.
Bhupatcharan Sett and another ..	728 14 6	....	188 14 1	540 0 5	....	540 0 5	....	Ditto.
Bejoy Krishna Mandal	5,381 15 6	3,954 0 6	894 1 10	533 13 2	....	533 13 2	406 1 2	Ditto.
							No. 3.	
Bell, Hal Montgomeria	1,110 0 0	550 7 6	104 13 10	454 10 8	....	....	E. B.— 5 11 8 448 15 0	Ditto.
							No. 2.	
Bhujendra Nath Banerjee ..	1,581 0 0	663 6 3	326 6 6	591 3 3	....	376 4 4	214 14 11	Ditto.
Barett, George William	670 15 5	131 12 4	180 0 8	359 2 5	....	296 10 6	62 7 11	Ditto.
							No. 2.	
Blackburn, H. P.	4,226 11 6	....	2,456 5 8	1,770 5 10	....	1,770 5 10	....	Ditto.
Bluck, Robert	1,397 6 9	394 11 4	469 2 10	533 8 7	....	533 8 7	....	Ditto.
Bonomali Dey	7,956 3 8	3,784 7 6	2,039 2 10	2,132 9 4	....	59 8 4	2,073 1 0	Ditto.
							No. 2.	
Bhairodan Rakhicha (Ram Chunder Bhairodan and Protap Mull Lukmi Chand).	20,978 9 5	14,909 3 2	2,794 14 11	3,274 7 4	....	2,834 14 11	439 8 5	Ditto.
							No. 2.	
Brook, Charles Henry	2,168 0 9	....	163 13 3	2,004 3 6	....	2,044 3 6	....	Ditto.
Banku Behary Dey	45,430 6 2	35,499 12 11	9,294 11 10	635 13 5	....	172 8 2	463 5 3	Ditto.
Bhuramull Banka	39,540 14 0	17,036 15 7	18,268 15 11	4,234 14 6	....	3,544 0 5	690 14 1	Ditto.
							No. 2.	
Bankim Chunder Ghose	650 0 0	567 2 7	73 12 6	9 0 11	....	....	E. B.— 9 0 11 415 12 0	Ditto.
							No. 3.	
Bhuramull Bhata	865 9 6	....	708 11 8	156 13 10	....	156 13 10	....	Ditto.
Bennett & Sons, W. H.	76,933 15 9	19,575 8 3	51,702 4 1	5,656 3 5	4,924 7 7	664 7 2	67 4 8	Ditto.
							No. 2.	
Birendra Mohan Rukshit ..	10,679 7 3	103 15 2	10,230 15 4	344 8 9	10 0 3	334 8 6	....	Ditto.
Birendra Nath Singh and others ..	1,13,099 8 9	77,953 7 5	31,040 2 9	4,105 14 7	....	1,028 10 4	3,077 4 3	Ditto.
							No. 2.	
Budri Das Radhakissen	8,126 14 2	5,239 4 5	908 1 0	1,979 8 9	....	1,707 0 5	272 8 4	Ditto.
							No. 2.	
Bhuramull Kothary and another ..	680 12 0	....	179 4 0	500 14 0	....	500 14 0	....	Ditto.
Bhugwanjee & Co.	783 15 8	....	145 10 1	638 5 7	....	638 5 7	....	Ditto.
Behary Lall Paik	591 10 3	238 3 0	122 2 5	231 4 10	....	164 3 9	67 1 1	Ditto.
							No. 2.	
Brochio, Joseph Samuel Walter ..	1,100 0 0	559 0 1	85 0 2	455 15 9	69 8 8	386 7 1	....	Ditto.
Bomanji, Scherior Irani	640 2 6	....	112 15 0	527 3 6	....	527 3 6	....	Ditto.
Beeton, Henry (181 of 1923)	830 0 0	71 8 7	93 7 10	664 15 7	....	664 15 7	....	

Estates.	Whole amount of receipts.	Whole disbursements.		Balance.	Portion of balance applicable to dividends now payable.	Net balance.	Transfers to unclaimed dividend account under rule 175 and section 122 of the P. T. I. Act of 1909.	Probable outturn of the dependencies.
		Dividends paid.	Other payments.					
	Rs. a. p.	Rs. a. p.	Rs. a. p.	Rs. a. p.	Rs. a. p.	Rs. a. p.	Rs. a. p.	
Bejoy Krishna Roy	2,255 0 0	....	670 2 9	1,584 13 3	....	1,584 13 3	....	Nothing further recoverable.
Babon, Mackertich Calchick	3,336 14 0	....	957 0 6	2,379 13 6	....	2,379 13 6	....	Ditto.
Bhairomull Srilal	539 15 3	....	114 11 1	425 4 2	52 2 0	373 2 2	....	Ditto.
Brij Mohun Serowgie	4,763 3 0	2,954 5 10	1,139 13 11	668 15 3	....	....	E. B.— 35 1 9 633 13 6	Ditto.
							No. 2.	
Bruce, Edward Lee Bowers	585 0 0	....	109 11 1	475 4 11	....	312 6 6	162 14 5	Ditto.
Bimanbehary Singhee (201 of 1924) ..	2,053 3 0	802 8 6	300 6 11	950 3 7	920 8 7	29 11 0	....	Ditto.
Behary Lal Sen Anukul Chunder Sen (Firm Anukul Chunder Sen Provash Chunder Sen) (2 of 1925).	7,503 2 0	1,907 3 6	716 0 6	4,879 14 0	649 7 5	4,230 6 7	....	Ditto.
Beepinbehary Dawn	74.532 3 7	25,482 13 2	41,028 4 7	8,021 1 10	5,993 3 10	163 8 9	1,864 5 3	Ditto.
							No. 2.	
Brohmodutt Haras and Hardass Haras ..	757 13 4	....	119 7 3	639 6 1	....	638 6 1	....	Ditto.
Bischoff, Gerald Theophylus	265 15 3	....	65 14 3	200 1 0	....	200 1 0	....	Ditto.
Bungshidhur Fouzdar	1,691 8 9	....	153 1 10	1,538 6 11	....	1,538 6 11	....	Ditto.
Bimalaprosad Mukerjee (Oriental Traders) ..	50 0 0	....	....	50 0 0	....	50 0 0	....	Ditto.
Burnett, Theodore Herbert	50 0 0	....	2 8 0	47 8 0	....	47 8 0	....	Ditto.
Benode Lall Singha	699 13 6	....	204 6 11	495 6 7	....	495 6 7	....	Ditto.
Bhupendra Nath Mitter (182 of 1926) ..	6 2 0	....	4 12 0	1 6 0	....	1 6 0	....	Ditto.
Brown, H. A.	679 0 0	285 5 8	100 1 0	293 9 4	42 8 0	251 1 4	....	Ditto.
Bridhi Chand Dungurdas (14 of 1927) ..	13,957 9 11	3,201 11 8	2,631 13 8	8,124 0 7	3,878 14 11	4,245 1 8	....	Ditto.
Bridhi Chand Punnachand	1,765 8 0	....	191 5 4	1,574 2 8	....	1,574 2 8	....	Outstanding in course of recovery.
Barker William Hyde	1,708 3 1	1,225 7 9	150 11 1	332 0 3	156 0 0	176 0 3	....	Ditto.
Benode Lal Paul and Rusick Lal Paul ..	50 0 0	....	....	50 0 0	....	50 0 0	....	Ditto.
Baker, H. J.	850 0 0	297 12 10	129 1 6	423 1 8	73 11 0	349 6 8	....	Ditto.
Bhimraj Mathuradas	2,452 7 3	245 0 0	401 4 5	1,806 2 10	....	1,806 2 10	....	Ditto.
Bhaniram Sewnundrai	317 13 3	....	109 12 11	208 0 4	....	208 0 4	....	Ditto.
Binraj Hurnundrai (83 of 1928) ..	42.408 8 1	21,029 0 0	4,726 8 2	16,652 15 11	13,168 12 3	3,484 3 8	....	Ditto.
Bartley, Mc. Murray Percy	230 0 0	....	60 15 0	169 1 0	....	169 1 0	....	Nothing further recoverable.
Basanta Kumar Dass	50 0 0	....	....	50 0 0	....	50 0 0	....	Ditto.
Burdhon Bros. (Panchugopal Burdhon and Shambhu Nath Burdhon).	183 3 0	....	129 15 11	53 3 1	....	53 3 1	....	Ditto.
Binraj Sethia	50 0 0	....	....	50 0 0	....	50 0 0	....	Ditto.
Basanta Kumar Paul	1,155 0 0	....	987 1 0	167 15 0	....	167 15 0	....	Ditto.
Brown, Maud Constance	317 12 0	....	100 4 2	217 7 10	....	217 7 10	....	Ditto.
Baloram Shah Chowdhury and Sons (42 of 1930).	3.939 8 6	....	2,586 12 0	1,352 12 6	....	1,352 12 6	....	Ditto.
Burke, Anthoney O' Connell ..	211 6 0	....	65 6 1	145 15 11	....	145 15 11	....	Ditto.

Bohitram Singhania and another ..	5,845 9 3	....	1,026 1 7	4,819 7 8	3,135 15 11	1,683 7 9	...		Ditto.
Bhola Singh Sadi (81 of 1930) ..	150 0 0	....	41 3 5	108 12 7	....	108 12 7	...		Ditto.
Balakidass Chandak	154 0 0	....	28 7 4	125 8 8	....	125 8 8	....		Ditto.
Bucktuarmull Chouthmull	2,859 0 0	30 0 0	529 10 1	2,299 5 11	....	2,299 5 11	....		Ditto.
Baker, Lawrence Stanislaus	235 0 0	....	74 14 0	160 2 0	....	160 2 0	...		Ditto.
Bird, Herbert (85 of 1931)	675 4 0	....	52 5 0	622 15 0	....	622 15 0	....		Ditto.
Broughton, Maurice Leonel	576 8 0	....	133 10 10	442 13 2	....	442 13 2	....		Ditto.
Baidya Nath Mullick	75 0 0	....	....	75 0 0	....	75 0 0	....		Ditto.
Buchoff, Charles Louis (76 of 1932) ..	1,225 8 5	....	210 15 1	1,014 9 4	....	1,014 9 4	....		Ditto.
B. B. Das & Bros. (108 of 1932) ..	530 0 0	....	305 15 2	224 0 10	....	224 0 10	....		Ditto.
Barbour, George (Firm William Heath) (105 of 1932).	3,054 7 0	1,162 9 7	880 1 10	1,011 11 7	849 4 9	162 6 10	....		Ditto
Brochio, J. S. W.	290 0 0	60 2 3	29 7 0	200 6 9	...	....	E.B.— 73 2 4 127 4 5		Ditto.
Bassler, Dr. Harry Chain (23 of 1916) ..	1,977 3 6	994 15 0	499 12 8	482 7 10	....	....	No. 2. E.B.— 24 15 1 457 8 9		Ditto.
Badri Prosad Lala (169 of 1932) ..	75 0 0	...	48 9 0	26 7 0	....	26 7 0	No. 2.		Outstanding in course of recovery.
Badul Chunder Das *alias* Badul Chunder Moduck (196 of 1932).	50 0 0	...	34 11 9	15 4 3	....	15 4 3	....		Ditto.
Balchand Chhaganlal (41 of 1933) ..	147 8 0	...	65 3 0	82 5 0	....	82 5 0	....		Ditto.
Benode Behary Dey (53 of 1933) ..	56 5 0	...	52 14 3	3 6 9	....	3 6 9	....		Ditto.
Biraj Sagarmull (82 of 1933)	1,463 2 10	...	341 7 8	1,121 11 2	....	1,121 11 2	....		Ditto.
Baikuntha Nath Sharma (103 of 1933) ..	160 0 0	....	56 11 0	103 5 0	....	103 5 0	....		Ditto.
Bullovdas Bhutter (6 of 1934) ..	50 0 0	....	2 8 0	47 8 0	....	47 8 0	....		Ditto.
Carapiet, George	2,541 1 4	....	723 0 3	1,818 1 1	....	1,818 1 1	....		Nothing further recoverable.
Chabi Lall Bora and Rung Lall Bora ..	652 0 0	573 8 6	59 13 7	18 9 11	....	....	E.B.— 18 9 11 261 0 9		Ditto.
Charu Chunder Ghose	2,750 0 0	...	197 7 0	2,552 9 0	....	2,552 9 0	No. 3. ...		Ditto.
Charles, Henry Robert	2,795 10 2	1,728 6 1	205 15 5	861 4 8	....	495 1 0	366 3 8		Ditto.
Chogemmull Binraj	12,181 9 7	8,489 7 4	2,752 7 7	939 10 8	....	939 10 8	No. 2. 485 14 5		Ditto.
Cleaveland, George William	943 13 0	...	71 9 1	872 3 11	....	872 3 11	No. 3. ...		Ditto.
Chew, Henry Dunn	950 0 0	414 0 0	173 1 9	362 14 3	....	18 15 1	343 15 2		Ditto.
Chuni Lal Deb *alias* Nirendra Krishna and Nikhilendra Krishna Deb.	2,576 9 6	1,130 15 0	568 8 9	877 1 9	....	34 8 4	No. 2. 842 9 5		Ditto.
Counter, George Allen	510 0 0	...	74 5 6	435 10 6	....	435 10 6	No. 2. ...		Ditto.
Chaves, Henry Joseph	550 0 0	269 2 9	75 3 0	206 10 3	....	46 15 5	159 10 10		Ditto.
							No. 2.		

Estates.	Whole amount of receipts.	Whole disbursements.		Balance.	Portion of balance applicable to dividends now payable.	Net balance.	Transfers to unclaimed dividend account under rule 175 and section 122 of the P. T. I. Act of 1909.	Probable outturn of the dependencies.
		Dividends paid.	Other payments.					
	Rs. a. p.	Rs. a. p.	Rs. a. p.	Rs. a. p.	Rs. a. p.	Rs. a. p.	Rs. a. p.	
Claudius, James Ezekiel	1,680 2 0	1,517 6 10	68 2 1	94 9 1	....	....	E.B.— 4 9 1 90 0 0	Nothing further recoverable.
Colvin, Mrs. Blanche Josephine ..	1,569 14 0	644 1 0	298 7 1	627 5 11	....	288 13 1	No. 2. 338 8 10	Ditto.
Chiranji Lall and another	11,900 0 0	2,651 2 3	7,800 5 8	1,448 8 1	....	1,348 8 1	No. 2. 100 0 0	Ditto.
Chandra Kanta Dutt and another ..	25,044 10 0	18,209 0 10	4,868 1 1	1,967 8 1	....	202 15 1	No. 2. 1,764 9 0	Ditto.
Chohi Hamamura	2,613 6 9	600 0 0	1,238 7 9	774 15 0	....	774 15 0	No. 2.	Ditto.
Cheraguddin	615 8 6	....	98 0 2	517 8 4	....	517 8 4	....	Ditto.
Chuni Lall Ghosh and Gones Lall Ghosh ..	6,444 14 0	1,511 12 5	856 2 11	4,076 14 8	....	842 5 4	3,234 9 4	Ditto.
Chew, Ulric Seaton	1,510 0 0	206 8 6	167 2 0	1,136 5 6	762 0 0	374 5 6	No. 2.	Ditto.
Chatu Lall Biyani	615 11 0	300 0 0	90 6 2	225 4 10	....	225 4 10	....	Ditto.
Chowdhury & Co.	150 0 0	....	100 0 0	50 0 0	....	50 0 0	....	Ditto.
Chouthmull Magunmull	10,656 11 0	....	10,352 15 4	303 11 8	....	303 11 8	....	Ditto.
Clump, Francis Aloysius	1,267 8 0	151 7 6	135 3 4	980 13 2	....	132 0 7	848 12 7	Ditto.
Coriah, Edwin	550 0 0	....	79 13 1	470 2 11	....	470 2 11	No. 2.	Ditto.
Chowdhury & Co.	660 10 0	....	156 10 0	504 0 0	....	504 0 0	....	Ditto.
Cole, Dudley Maurice	3,118 0 0	482 11 1	602 13 4	2,032 7 7	1,261 0 2	771 7 5	....	Ditto.
Cullacott, John Husking	867 2 0	240 13 2	117 12 1	508 8 9	....	178 4 9	330 4 0	Ditto.
Chuny Lal Chouthmull	4,576 2 3	....	503 5 9	4,072 12 6	....	4,072 12 6	No. 2.	Ditto.
Chew, Osmond Aloysius	203 3 0	....	53 15 6	149 3 6	....	149 3 6	....	Ditto.
Coggins, Williams Munro and Janet Constance.	553 8 5	....	543 2 8	10 5 9	....	10 5 9	....	Ditto.
Chuni Lall Dutt	1,361 11 9	214 4 6	860 5 8	287 1 7	129 0 0	158 1 7	....	Ditto.
Caston, Arthur Willoughby	250 12 0	100 7 5	80 8 0	69 12 7	64 15 4	4 13 3	....	Ditto.
Cheers, B. E.	902 8 3	310 9 2	297 4 1	294 11 0	244 6 8	....	E.B.— 50 4 4	Ditto.
Cliffe, Sassoon	7,066 2 0	....	1,918 11 0	5,147 7 0	....	5,147 7 0	....	Ditto.
Chetram, Doulatram	1,393 12 0	....	163 7 0	1,230 5 0	....	1,230 5 0	....	Ditto.
Chater, H. G.	807 8 0	67 11 0	264 9 10	475 3 2	434 12 9	40 6 5	....	Ditto.

Cassobhoy, D. M.	62,809 6 1	27,822 15 3	34,984 6 3	2 0 7	....	2 0 7	2,564 8 6	Outstanding in course of recovery.
							No. 3.	
Chiranji Lal Janki Dass	1,603 0 0	....	278 4 1	1,324 11 11	....	1,324 11 11	....	Ditto.
Corbit, William Luke	191 0 0	....	78 5 0	112 11 0	....	112 11 0	....	Ditto.
Chimneyram Bhutter	200 0 0	....	32 3 8	167 12 4	....	167 12 4	....	Ditto.
Cheney, Sidney Herbert (1 of 1931) ..	2,100 5 0	1,527 5 5	317 9 8	255 5 11	252 0 9	3 5 2	....	Nothing further recoverable.
Charu Chunder Paul (111 of 1932) ..	1,153 2 3	....	240 1 10	913 0 5	....	913 0 5	....	Ditto.
Clark, Eva Margaret	5,344 1 6	....	4,031 15 2	1,312 2 4	....	1,312 2 4	....	Ditto.
Carter, Albert James (164 of 1930) ..	750 0 0	438 9 10	282 2 3	29 3 11	28 8 0	0 11 11	....	Ditto.
Chogmull Buldeodass	75 0 0	....	....	75 0 0	....	75 0 0	....	Ditto.
Chaitram Rambilash (193 of 1930) ..	7,643 6 5	....	7,575 2 6	68 3 11	....	68 3 11	....	Ditto.
Coward, Henry Albert (73 of 1931) ..	490 0 0	6 10 7	87 12 4	395 9 1	328 7 0	67 2 1	....	Ditto.
Collins, Albert George (132 of 1931) ..	550 0 0	....	136 2 0	413 14 0	....	413 14 0	....	Ditto.
Chamonard, Antoine Ian Marie (148 of 1931)	887 7 11	528 0 0	151 6 6	208 1 5	187 0 0	21 1 5	....	Ditto.
Chork Ping (Canton Restaurant) ..	7,419 0 0	2,419 1 2	4,785 9 1	142 5 9	58 9 5	83 12 4	....	Ditto.
Chintamoney Srinibash Raghunath Rao (273 of 1931).	1,697 12 9	192 15 7	296 14 6	1,207 14 8	710 7 3	497 7 5	....	Outstanding in course of recovery.
Champalall Domani (Proprietor of the firm Kesodas Sohun Lall and Kesodass Domani) (1 of 1932).	11,419 4 6	....	1,243 14 9	10,175 5 9	....	10,175 5 9	....	Ditto.
Cox, H. J.	1,233 4 0	980 1 6	239 3 7	13 14 11	....	....	E.B.— 13 14 11 18 15 7	Ditto.
							No. 3.	
Chetti Shawoo Kaiwar	52 8 0	....	2 8 0	50 0 0	....	50 0 0	....	Ditto.
Chunilall Johurry and Moti Lall Johurry (47 of 1932).	75 0 0	....	42 13 6	32 2 6	....	32 2 6	....	Ditto.
Cook, Adam (75 of 1932)	50 0 0	....	46 0 6	3 15 6	....	3 15 6	....	Ditto.
Chananmull Kanmull Lodha	225 0 0	....	75 0 0	150 0 0	....	150 0 0	....	Ditto.
De Santos, E. J.	507 0 0	153 15 3	65 3 7	287 13 2	....	....	E. B.— 9 14 6 277 14 8	Nothing further recoverable.
							No. 2	
Deveroux, O. N.	448 4 6	370 2 0	43 11 0	34 7 6	....	....	E. B.— 14 8 10 19 14 8	Ditto.
							No. 2	
Dulal Chandra Seal and Fanindra Nath Mukerjee.	13,531 5 8	8,921 8 9	1,847 11 4	2,762 1 7	....	141 9 11	2,620 7 8	Ditto.
							No. 2	
							....	
Dhonopaty Nag	267 7 3	....	45 7 3	222 0 0	....	222 0 0	....	Ditto.
Dhurneydhur Saha	1,820 6 0	....	122 0 2	1,698 5 10	....	1,698 5 10	....	Ditto.
Durlov Chunder Paul	350 0 0	....	67 6 7	282 9 5	....	282 9 5	....	Ditto.
Dukhi Juggernath and Guru Patro Saha ..	659 8 0	[illegible]	75 15 1	583 8 11	....	583 8 11	....	Ditto.
Domingo, A. W.	12,261 10 10	10,062 7 9	969 2 0	1,230 1 1	....	....	E. B.— 7 9 0 1,222 8 1	Ditto.
							No. 2.	

Estates	Whole amount of receipts	Whole disbursements.		Balance	Portion of balance applicable to dividends now payable.	Net balance.	Transfers to unclaimed dividend account under rule 175 and section 122 of the P T I. Act of 1909	Probable outturn of the dependencies
		Dividends paid	Other payments.					
	Rs a. p.	Rs. a p.	Rs a. p.	Rs. a p	Rs a. p.	Rs. a. p.	Rs a p.	
Davidson, Oswald Eric	395 0 0	208 10 2	55 6 4	130 15 6	....	62 14 3	68 1 3	Nothing further recoverable.
Durgaprosad Khettry and Nawal Kishore Khettry	3,068 1 0	1,160 9 2	1,783 4 0	124 3 10	....	124 3 10	No 2 769 1 8	Ditto
Doyal Mowzy	86,143 4 10	71,829 '3 8	10,837 4 8	3,476 12 6	1,080 9 7	125 7 11	No. 3 2,270 11 0	Ditto.
Dumaine, C. G.	1,225 10 0	...	62 4 0	1,163 6 0	....	1,163 6 0	No. 2	Ditto
Dover, Percival John	218 1 4	184 15 8	27 4 6	5 13 2	....	. .	E B — 5 13 2 127 9 9	Ditto.
Dhanraj Gunputrai ..	34,761 9 6	22,624 12 7	9,450 10 10	2,686 2 1	883 10 4	389 8 11	No 3 1,412 14 10	Ditto
D' Costa, L M. . ..	580 0 0	346 9 9	92 2 6	141 3 9	....	62 12 10	No. 2 78 6 11	Ditto
Debendra Chunder Kar ..	551 13 0	....	159 6 1	392 6 11	....	392 6 11	No. 2. . .	Ditto
Day, William Sinclair and Mrs Alice Grace Day	722 2 0	...	96 6 6	625 11 6	....	625 11 6	. . .	Ditto
D'Rozario, W. P.	769 3 10	....	148 11 0	620 8 10	598 14 5	21 10 5		Ditto
Dickie & Co , R. A	82,295 14 2	30,594 9 1	46,081 5 2	5,619 15 11	....	1,432 4 6	4.187 11 5	Ditto.
Dino Nath Dutt . ..	797 5 9	..	238 9 9	558 12 0	....	558 12 0	No. 2. . . .	Ditto.
Dino Nath Dey . ..	593 8 3	32 0 0	141 9 4	419 14 11	....	419 14 11	. . .	Ditto.
Dwarka Dass Dhunsook Dass (Dwarka Dass and others).	3,895 5 9	....	3,531 1 4	364 4 5	....	364 4 5	. . .	Ditto.
Debendra Nath Dutt .. .	729 7 0	.	81 1 6	648 5 6	.. .	648 5 6	. . .	Ditto.
DeCruz, Birchmeno Stanislaus ..	892 12 0	503 15 9	130 7 2	258 5 1	71 2 6	187 2 7	. . .	Ditto.
Ducasse, Ernest Henry . ..	656 15 0	...	159 1 11	497 13 1	....	497 13 1	. . .	Ditto
Dev Lall Shah	838 1 0	...	273 8 0	564 9 0	. .	564 9 0	....	Ditto
Dharma Dass Shah . ..	1,734 13 9	1,095 1 9	271 4 0	368 8 0	295 6 4	73 1 8	. . .	Ditto.
Dear, T W	6,974 1 4	2,754 6 4	1,206 12 3	3,012 14 9	....	1,232 3 9	1,780 11 0	Ditto
Davis, M., Mrs.	356 0 0	....	75 8 0	280 8 0	....	280 8 0	No. 2 . .	Ditto
Dozey, Hugh Arthur	635 0 0	225 6 4	99 1 0	310 8 8	....	60 4 2	250 4 6	Ditto.
							No. 2.	

Dwijendra Nath Sen (Sen & Sen) ..	795 3 3	....	618 4 2	176 15 1	....	176 15 1	....	Ditto.
DeSilva, Henry Pierrie	2,039 0 0	702 3 9	211 12 4	1,124 15 11	736 11 0	388 4 11	....	Ditto.
Dakuram Purohit	50 0 0	....	....	50 0 0	....	50 0 0	....	Ditto.
Dhanopati Banerjee	7,878 0 0	....	1,114 9 2	6,763 6 10	....	6,763 6 10	....	Ditto.
D. N. Samanta Bros. (211 of 1927) ..	6,115 10 3	....	3,862 4 1	2,253 6 2	....	2,253 6 2	....	Ditto.
Dinesh Chunder Sen	197 0 0	....	145 5 0	51 11 0	....	51 11 0	....	Ditto.
Durgadass Kar	352 10 0	....	73 15 1	278 10 11	....	278 10 11	....	Ditto.
Dhiraj Lall Mohun Lall	50 0 0	....	....	50 0 0	....	50 0 0	....	Ditto.
Debendra Nath Ghosh, Narendra Nath Ghosh and Jotindra Nath Ghosh	50 0 0	....	....	50 0 0	....	50 0 0	....	Ditto.
Debendra Nath Bhattacharjee ..	659 6 0	....	329 1 6	330 4 6	....	330 4 6	....	Ditto.
Doulutram Mehra (242 of 1928) ..	9,264 13 3	6,803 10 1	1,201 7 10	1,259 11 4	1,203 12 7	55 14 9	....	Ditto.
Doyle, Edward Alexander	250 0 0	....	79 8 6	170 7 6	....	170 7 6	....	Ditto.
D. N. Ghose & Bros.	50 0 0	....	....	50 0 0	....	50 0 0	....	Ditto.
Debesh Chundra Ghosh (201 of 1929) ..	1,636 0 0	291 0 10	735 15 10	608 15 4	452 15 0	156 0 4	....	Ditto.
Davies, George (227 of 1930)	1,268 2 4	254 3 6	152 15 8	860 15 2	463 1 10	397 13 4	....	Ditto.
DeCruz, Francis Stanislaus	315 0 0	104 2 1	91 10 6	29 3 5	....	29 3 5	....	Ditto.
Durgaprosad Khettry (252 of 1931) ..	161 13 6	....	47 1 10	114 11 8	....	114 11 8	....	Ditto.
Duff, Charles Alan (4 of 1932) ..	100 0 0	....	55 13 0	44 3 0	....	44 3 0	....	Outstanding in course of recovery.
Driver, Harold Seton (161 of 1932) ..	157 0 0	....	46 11 4	110 4 8	....	110 4 8	....	Ditto.
DeCruz, Ivan Joakim and Jyotish Chandra Bose (31 of 1933).	105 0 0	....	105 12 0	0 12 0 Dr. Balance.	....	0 12 0	....	Ditto.
Drew, John Henry Austin Lewis (73 of 1933)	50 0 0	....	45 7 6	4 8 6	....	4 8 6	....	Ditto.
Day, Eric Hugh (115 of 1933) ..	50 0 0	....	23 8 0	26 8 0	....	26 8 0	....	Ditto.
Evans, Hugh Frederick	752 4 0	459 13 11	93 1 3	199 4 10	....	66 13 8	132 7 2	Nothing further recoverable.
							No. 2	
Evans, John Hewith	660 0 0	....	123 2 4	536 13 8	258 4 0	278 9 8	....	Ditto.
Ebrahim Soleman Salajee & Co. (Haji Azum Golam Hossain & Co.).	4,89,676 12 5	2,23,254 10 11	2,35,327 6 10	31,094 10 8	30,272 6 3	822 4 5	....	Ditto.
Elahibux and another	748 7 6	....	253 9 11	494 13 7	....	494 13 7	....	Ditto.
Ebrahim Haji Hasan Abdul ..	1,626 1 0	....	149 8 9	1,476 8 3	....	1,476 8 3		Ditto.
Ebrahim Boorah Shamsuddin Boorah, Abdyally Boorah (Mamoowalla & Co.) (28 of 1924).	17,841 3 5	3,688 15 4	2,339 2 7	11,813 1 6	11,287 13 10	525 3 8	....	Ditto.
Ebrahim	357 3 10	....	90 0 1	267 3 9	....	267 3 9	....	Ditto.
Ezekiel Jacob Ezekiel	251 2 1	....	50 0 7	201 1 6	....	201 1 6	....	Ditto.
Ezekiel Jacob Ezekiel and others ..	630 6 3	....	178 9 0	451 13 3	....	451 13 3	....	Ditto.
Ezra Musceab (134 of 1927)	2,010 0 0	1,765 4 10	220 15 11	23 11 3	....	23 11 3	....	Ditto.
Edge, Charles Robert	460 0 0	....	77 4 0	382 12 0	....	382 12 0	....	Ditto.
Eaton, Walter Terence	65 0 0	....	47 14 11	17 1 1	....	17 1 1	....	Ditto.
Eaton, Emilian Joseph	90 0 0	....	53 5 0	36 11 0	....	36 11 0	....	Ditto.
Emda (Firm Emda Abdul Karim) ..	250 0 0	....	83 5 0	166 11 0	....	166 11 0	....	Ditto
Eden, Ashby (30 of 1932)	212 8 0	....	58 6 9	154 1 3	....	154 1 3	....	Ditto.
Futteh Chand Chotay Lall	4,325 1 3	....	3,808 5 3	516 12 0	....	516 12 0	....	Ditto.
Frangopoulo Iphegenia	1,343 4 6	715 10 11	251 5 1	376 4 6	....	115 7 11	260 12 7	Ditto.
							No. 2.	
Framji & Sons	76,185 1 11	58,841 5 9	13,839 2 3	3,504 9 11	....	273 14 0	3,230 11 11	Ditto.
							No. 2.	
Fazal Ellahi	603 12 9	....	79 5 6	524 7 3	....	524 7 3	....	Ditto.
Futeh Chand Chandmull (Futeh Chand Domani).	55,229 1 10	48,918 13 6	4,331 7 7	1,978 12 9	....	1,049 4 7	929 8 2	Ditto.
							No. 2.	

Estates.	Whole amount of receipts.	Whole disbursements.		Balan	Portion of balance applicable to dividends now payable.	Net balance.	Transfers to unclaimed dividend account under rule 175 and section 122 of the P. T. L. Act of 1909.	Probable outturn of the dependencies.
		Dividends paid.	Other payments.					
	Rs. a. p.	Rs. a. p.	Rs. a. p.	Rs. a. p.	Rs. a. p.	Rs. a. p.	Rs. a. p.	
Farlane Wilfred Albion	208 15 0	....	51 15 11	156 15 1	....	156 15 1	....	Nothing further recoverable.
Fanindra Nath Bhattacharji	111 5 0	....	5 10 7	105 10 5	....	105 10 5	....	Ditto.
Firdyosi & Co.	6,000 0 0	....	5,325 10 1	674 5 11	....	674 5 11	....	Ditto.
Frost, Alfred William	150 0 0	....	50 11 5	99 4 7	....	99 4 7	....	Ditto.
Fink, Norman Archibald	628 0 0	221 2 1	115 9 4	291 4 7	210 8 0	80 12 7	....	Ditto.
Fanindra Nath Banerjee	3,211 2 0	1,911 13 4	1,258 7 5	40 13 3	....	40 13 3	....	Ditto.
Fazal Ellahi	2,455 13 9	1,593 3 2	609 7 5	253 3 2	188 11 10	64 7 4	....	Ditto.
Flynn, Henry James	174 4 0	....	57 3 6	117 0 6	....	117 0 6	....	Ditto.
Fernandez, John Baptiste	1,378 14 6	....	774 4 9	604 9 9	....	604 9 9	....	Ditto.
Friends Society	50 0 0	....	....	50 0 0	....	50 0 0	....	Ditto.
Fanindra Nath Bhattacharjee and Amulya Kanta Rukshit.	90 5 0	....	4 8 3	85 12 9	....	85 12 9	....	Ditto.
Fitwell & Co.	203 4 0	....	59 8 10	143 11 2	....	143 11 2	....	Ditto.
Frank, Victor George	50 0 0	....	44 2 6	5 13 6	....	5 13 6	....	Ditto.
Francis, Lewis	60 0 0	....	45 1 9	14 14 3	....	14 14 3	....	Ditto.
Fox, Reginald Norman	50 1 0	....	25 7 3	24 9 9	....	24 9 9	....	Ditto.
Fitzgerald, Richard Auster	76 9 0	....	48 11 3	27 13 9	....	27 13 9	....	Ditto.
Ferosali Khan Mirza	450 0 0	....	419 11 4	30 4 8	....	30 4 8	....	Ditto.
Francis, John Stanislaus (164 of 1932) ..	175 1 3	....	50 0 9	125 0 6	....	125 0 6	....	Ditto.
Fink, Austin Edmond (60 of 1933) ..	50 10 6	....	43 2 6	7 8 0	....	7 8 0	....	Ditto.
Fazil Kamil & Co. (83 of 1933) ..	50 0 0	....	28 2 6	21 13 6	....	21 13 6	....	Ditto.
Gopal Chandra Dutt	824 2 9	....	161 13 10	662 4 11	....	662 4 11	....	Ditto.
Gopal Dass Khettry	579 13 0	367 6 8	65 8 11	146 13 5	....	146 13 5	266 9 11	Ditto.
							No. 3.	
Girindra Chandra Gooyre and others ..	24,282 13 11	18,988 8 7	4,960 7 8	333 13 8	....	269 5 7	64 8 1	Ditto.
							No. 2. 2,950 9 8	
							No. 3.	
Grocer, Charles Stewart	594 13 6	153 10 3	56 4 10	384 14 5	....	384 14 5	7 0 0	Ditto.
							No. 3.	
Gobind Lall Mukerjee (193 of 1914) ..	3,205 6 2	....	319 14 9	2,885 7 5	....	2,885 7 5	....	Ditto.
Grand, Harry	819 10 3	438 6 10	218 5 6	162 13 11	....	162 13 11	27 15 4	Ditto.
							No. 3.	
Gobind Das Bhatia	1,416 3 0	....	1,265 3 0	151 0 0	....	151 0 0	....	Ditto.

Ganada Prosad Ghose and Hari Das Ghose (151 of 1914).	67,354 2 0	42,210 14 0	23,743 0 1	1,400 3 11	....	258 7 6	1,141 12 5	Ditto.
							No. 2. 260 15 10	
Gaur Chand Das and Kunjo Paul (238 of 1914).	6,192 11 0	4,739 12 8	874 13 9	578 0 7	....	386 4 11	No. 3. 191 11 8	Ditto.
							No. 2.	
Gajraj Surana	6,671 11 0	1,567 1 11	3,103 2 10	2,001 6 3	....	1,388 8 7	612 13 8	Ditto.
							No. 2.	
Gregory, John Marchmount	224 12 10	160 10 0	62 14 4	1 4 6	1 4 6	....	....	Ditto.
Girish Chandra Seal	3,208 10 3	1,733 6 11	595 7 7	879 11 9	....	879 11 9	....	Ditto.
Ganga Prosad Kanahya Lall (144 of 1915)	20,280 8 0	14,469 12 3	3,633 2 4	2,177 9 5	....	129 15 8	2,047 9 9	Ditto.
							No. 2.	
Goberdhone Das Sewruton and Banshi Lall Sewratan (218 of 1915).	1,455 4 6	522 9 8	332 3 9	600 7 1	....	79 1 8	521 5 5	Ditto.
							No. 2.	
Gobind Lall Banerjee (Hill & Co.) ..	819 11 6	216 2 10	281 11 3	321 13 5	....	50 7 9	271 5 8	Ditto.
Gubbay, Robin Ezra	4,178 7 5	3,339 4 11	379 14 7	459 3 11	....	459 3 11	....	Ditto.
Ganesh Das Raghubeer Dayal	885 8 3	....	242 4 4	643 3 11	....	643 3 11	....	Ditto.
Gangesh Chandra Mukherjee	1,861 4 0	670 8 8	394 12 5	795 4 11	....	107 4 7	688 10 4	Ditto.
							No. 2.	
Ganesh Lall Daga and another ..	7,649 12 10	4,964 14 0	812 14 8	1,863 0 2	....	144 15 11	1,718 0 3	Ditto.
							No. 2.	
Gangaram (Joy Gopal Joy Kissen) (74 of 1920).	47,857 4 11	29,034 15 9	11,109 7 3	7,712 13 11	....	651 10 5	7,061 3 6	Ditto.
							No. 2.	
Ghoneshyam Das Nundlal	2,980 0 0	....	227 5 6	2,752 10 6	....	2,752 10 6	....	Ditto.
Gunendra Krishna Mitter (135 of 1920) ..	31,409 1 6	....	18,631 2 11	12,837 14 7	....	12,837 14 7	....	Ditto.
Graham, Walter Archibald	140 0 0	....	54 12 0	85 4 0	....	85 4 0	....	Ditto.
Ghanshyam Das Kedernath	720 9 0	....	88 6 5	632 2 7	....	632 2 7	....	Ditto.
Gungadhur (Ghoneshyam Ram Nath, Sew Dutt Roy Gunga Dhur).	5,955 2 10	....	5,051 10 11	903 7 11	....	903 7 11	....	Ditto.
Gobindo Chundra Bose	2,005 15 6	....	768 1 8	1,237 13 10	....	1,237 13 10	....	Ditto.
Gravelink, P. E.	923 8 0	472 4 7	331 15 9	119 3 8	....	....	E. B.— 35 15 8 83 4 0	Ditto.
							No. 2.	
Gregory, John Marchmount (2nd insolvency) (48 of 1925).	1,02,685 9 4	91,422 11 8	2,039 14 10	9,222 14 10	3,778 13 3	5,444 1 7	....	Ditto.
Girish Chundra Kundu and another (Guru Das Paul & Co.) (136 of 1925).	5,372 7 0	....	1,966 15 10	3,405 7 2	....	3,405 7 2	....	Ditto.
Girish Chundra Auddy	1,766 12 3	307 6 1	587 6 4	871 15 10	346 5 11	525 9 11	....	Ditto.
Gunny Hajee Ahmed	1,388 2 0	....	165 10 0	1,222 8 0	....	1,222 8 0	....	Ditto.
Gregory, Lucas	3,122 10 1	658 7 3	1,431 0 3	1,033 2 7	264 8 0	768 10 7	....	Ditto.
Gordon, John Hamilton	4,281 1 5	....	3,914 4 2	366 13 3	....	366 13 3	....	Ditto.
Gobindram Tebriwalla	2,061 2 9	....	254 2 5	1,807 0 4	1,190 1 4	616 15 0	....	Ditto.
Gardiner, Edward John Rowson ..	712 1 3	195 0 0	87 4 4	429 12 11	....	429 12 11	....	Ditto.
Gosto Behary Dey	50 0 0	....	....	50 0 0	....	50 0 0	....	Ditto.

Estates.	Whole amount of receipts.	Whole disbursements.		Balance.	Portion of balance applicable to dividends now payable.	Net balance.	Transfers to unclaimed dividend account under rule 175 and section 122 of the P. T. I. Act of 1909.	Probable outturn of the dependences.
		Dividends paid.	Other payments.					
	Rs. a. p.	Rs. a. p.	Rs. a. p.	Rs. a. p.	Rs. a. p.	Rs. a. p.	Rs. a. p.	
Gunsephe, Gmiener	1,269 7 0	1,129 13 3	135 12 9	3 13 0	....	3 13 0	....	Nothing further recoverable.
Gobind Lall Rathi (114 of 1927) ..	750 0 0	....	219 6 9	530 9 3	. ..	530 9 3	....	Ditto.
Grant, Charles William (148 of 1927) ..	890 0 0	444 6 5	128 3 11	317 5 8	45 0 0	272 5 8	....	Ditto.
Giris Chundra Sil (154 of 1927) ..	9,742 12 6	3,917 14 6	4,867 10 3	957 3 9	408 12 0	548 7 9	....	Ditto.
Gregory, J. M. (1st insolvency) ..	29,403 9 6	22,523 6 10	4,649 0 4	2,231 2 4	2,231 2 4	...	....	Ditto.
Griffiths, James Arnold	411 13 0	164 8 3	85 7 5	161 13 4	46 8 0	115 5 4	....	Ditto.
Gubbay, Ezekiel Abraham	12,885 13 0	183 10 8	4,581 13 2	8,120 5 2	690 0 0	7,430 5 2	....	Ditto.
Gopal Chundra Dutt (Dutt Das & Co.) ..	3,593 5 0	685 3 2	786 11 3	2,121 6 7	52 15 8	2,068 6 11	....	Ditto.
Gopi Mohun Roy Chowdhury (150 of 1929)	2,22,019 1 4	1,93,447 2 10	21,873 1 11	6,698 12 7	2,706 1 3	3,992 11 4	....	Ditto.
Gregory, MacKertich Carapiet	5,268 5 6	....	1,531 8 7	3,736 12 11	....	3,736 12 11	....	Ditto.
Green, Stanley S.	561 8 0	....	112 1 3	449 6 9	368 2 11	81 3 10	....	Ditto.
Ghisulal Chabra and Kesrimull Chabra (63 of 1930).	50,300 6 0	....	4,792 8 1	45,507 13 11	....	45,507 13 11	....	Ditto.
Grant, William Sydney Herman ..	431 5 0	....	75 1 0	356 4 0	....	356 4 0	....	Ditto.
Goberdhone Das Birji & Co.	2,064 14 3	....	776 4 10	1,288 9 5	665 7 7	623 1 10	....	Ditto.
Ganesh Das Brijmohan	538 5 3	....	222 11 11	315 9 4	....	315 9 4	....	Ditto.
Gregory, H. C. G. (117 of 1931) ..	713 1 9	345 11 5	278 14 7	88 7 9	44 15 1	43 8 8	....	Ditto.
Gogan Chundra Rajeswar Saha ..	2,796 14 3	....	553 12 9	2,243 1 6	....	2,243 1 6	....	Ditto.
Grueber, Percival Kenneth	190 0 0	....	51 14 9	138 1 3	....	138 1 3	....	Ditto.
Godhraj Chiranji Lal (228 of 1931) ..	914 9 3	....	222 14 3	691 11 0	....	691 11 0	....	Ditto.
Goberdhone Sil	5,300 0 0	1,646 2 5	3,635 2 9	18 10 10	....	...	E. B.— 18 10 10 40 7 7 No. 3.	Ditto.
Geeran, Mrs.	50 0 0	....	46 6 6	3 9 6	....	3 9 6	....	Ditto.
Golam Roshul (86 of 1932)	50 0 0	....	41 6 9	8 9 3	....	8 9 3	....	Ditto.
Gour Chand Mullick (89 of 1932) ..	17,582 4 4	....	699 14 0	16,882 6 4	....	16,882 6 4	.. .	Ditto.
Gomesh Levis Joseph	245 0 0	100 11 7	47 3 6	97 0 11	....	...	E. B.— 9 2 3 87 14 8 No. 2.	Ditto.
Gopal Lal Chunder *alias* Gopal Chunder Chunder (223 of 1932).	2,372 6 9	....	185 3 2	2,187 3 7	....	2,187 3 7	....	Ditto.
Goverdhone Chuckerbutty and Hrishikesh Chuckerbutty (Goverdhone Chuckerbutty and Brothers).	50 0 0	....	2 8 0	47 8 0	....	47 8 0	....	Outstanding in course of recovery.
Greeson, Harold (111 of 1933) ..	50 5 3	....	38 4 0	12 1 3	....	12 1 3	....	Ditto.
Hari Das Mandal and Mati Lal Set ..	11,093 10 0	9,513 15 8	561 7 5	1,018 2 11	....	1,018 2 11	520 4 9 No. 3.	Nothing further recoverable.

Hari Dasi Dasi, S. M.	60,584 2 1	33,110 7 8	27,333 9 0	143 1 5	....	143 1 5	2,703 14 3	Ditto.
							No. 3.	
Hurruckchand and Ram Lal	1,880 0 0	....	501 15 8	1,378 0 4	....	1,378 0 4	....	Ditto.
Haji Noor Mohamed Abu Taleb ..	1,09,472 2 5	42,148 4 7	54,959 2 6	12,364 11 4	....	3,083 8 5	9,281 2 11	Ditto.
							No. 2.	
							8,052 3 7	
							No. 3.	
Hafizbux Ellahizul Karim Nugmull Huq ..	483 1 3	....	266 8 8	216 8 7	....	216 8 7	....	Ditto.
Hariram and Srinarain, Hari Ram *alias* Kunjo Lall.	44,392 15 7	35,174 5 6	7,879 10 10	1,338 5 3	131 15 10	0 1 8	1,206 13 9	Ditto.
							No. 2.	
							1,575 0 4	
							No. 3.	
Hoppen, Samuel	7,290 4 3	5,282 9 3	1,383 0 6	624 10 6	....	....	624 2 9	Ditto.
							No. 2.	
							E. B.—	
							0 7 9	
							535 8 11	
							No. 3.	
Hira Lall Khemcurn (71 of 1915) ..	12,475 6 3	6,947 14 9	3,605 2 0	1,922 5 6	....	858 11 5	1,063 10 1	Ditto.
							No. 2.	
							E. B.—	
Hari Das Sinha & Co.	746 12 6	283 10 5	73 1 7	390 0 6	....	....	6 0 7	Ditto.
							383 15 11	
							No 2.	
Hari Bhusun Mukherjee	1,220 2 6	413 10 1	653 9 6	152 14 11	....	133 4 8	19 10 3	Ditto.
							No. 2.	
Hurdit Sing	633 1 4	391 8 2	87 14 4	153 10 10	....	74 2 0	79 8 10	Ditto.
							No. 2.	
Haji Mohamed Hossain	626 13 9	....	85 15 5	540 14 4	....	540 14 4	E. B.—	Ditto.
Hafiz Emambux and Sons, Hafiz Ahmeddin	1,145 0 0	234 11 2	233 0 0	677 4 10	....	....	19 10 4	
							657 10 6	Ditto.
							No. 2.	
							....	Ditto.
Haysham William Kerr	515 9 0	....	89 12 5	425 12 7	....	425 12 7	....	Ditto.
Haji Noor Mohamed Jackeria (150 of 1920)	4,76,897 14 9	3,79,887 11 7	86,440 13 10	21,069 5 4	3,778 4 10	937 4 3	6,353 12 3	
							No. 2.	
Harlow, Edwin William	220 0 0	77 4 0	58 9 0	84 3 0	....	....	E. B.—	
							8 14 6	
							75 4 6	Ditto.
							No. 2.	

Estates.	Whole amount of receipts.	Whole disbursements.		Balance.	Portion of balance applicable to dividends now payable.	Net balance.	Transfers to unclaimed dividend account under rule 175 and section 122 of the P. T. I. Act of 1909.	Probable outturn of the dependencies.
		Dividends paid.	Other payments.					
	Rs. a. p.	Rs. a. p.	Rs. a. p.	Rs. a. p.	Rs. a. p.	Rs. a. p.	Rs. a. p.	
Hulas Chand Bold (164 of 1920) ..	22,418 15 4	18,164 4 9 214 4 4 Represents amount transferred to Estate account.	3,009 0 0	1,245 10 7	962 14 10	208 8 7	74 3 2 No. 2.	Nothing further recoverable.
Hur Kissen Issur Das (192 of 1921) ..	24,231 11 10	18,408 10 0	5,008 1 2	815 0 8	....	316 9 6	498 7 2 No. 2.	Ditto.
Hafiz Ashanulla Mohamed Omar Bary ..	9,474 13 10	1,286 14 7	5,631 2 5	2,556 12 10	827 10 7	1,729 2 3	....	Ditto.
Hashim Ebrahim Saleji	13,788 1 0	....	11,530 5 11	2,257 11 1	....	2,257 11 1	....	Ditto.
Hira Lall Johuri	13,287 13 2	....	10,617 12 2	2,670 1 0	....	2,670 1 0	....	Ditto.
Hyam Joseph Issac Joseph	2,840 6 4	....	254 2 3	2,586 4 1	....	2,586 4 1	....	Ditto.
Hogan, William Bryan	5,450 0 0	4,080 2 4	374 9 5	95 4 3	....	40 14 8	54 5 7 No. 2.	Ditto.
Hodges, G. H.	299 0 0	....	89 14 0	209 2 0	....	209 2 0	....	Ditto.
Herbert Hecquet (149 of 1923) ..	5,267 0 3	4,932 14 0	332 14 9	1 3 6	....	1 3 6	....	Ditto.
Habibund Ahmed	966 0 0	....	116 1 7	849 14 5	....	849 14 5	....	Ditto.
Harendra Krishna Seal	648 10 1	....	83 10 10	564 15 3	....	564 15 3	....	Ditto.
Hira Lall Mani Lall	621 12 0	....	82 15 2	538 12 10	....	538 12 10	....	Ditto.
Hemendra Prosad Ghosh	200 0 0	....	186 5 0	13 11 0	....	13 11 0	....	Ditto.
Hunt, Ernest Joseph Seehase	2,600 0 0	1,553 15 9	449 3 1	596 13 2	565 6 10	16 6 4	15 0 0 No. 2.	Ditto.
Hefferen, W. E.	17,976 8 4	14,823 6 4	2,807 0 6	344 1 6	329 9 6	....	E. B.— 14 8 0	Ditto.
Haji Karim Habib Dhorajiwalla (216 of 1924).	1,32,272 5 5	61,424 2 8	63,933 12 6	6,914 6 3	983 14 8	4,902 11 5	1,027 12 2 No. 2.	Ditto.
Haji Amiruddin Mullick (23 of 1925) ..	7,183 6 4	1,909 4 1	2,815 2 2	2,459 0 1	512 14 9	1,946 1 4	....	Ditto.
Hanuman Bux Ram Narain	627 1 5	....	297 6 0	329 11 5	....	329 11 5	....	Ditto.
Haji Mohamed Haji Jackeria (Sole Proprietor of Haji Jackeria Haji Jan Mahamad & Co.) (231 of 1923).	20,867 2 9	4,731 11 2	5,606 3 8	10,529 3 11	4,478 11 4	6,050 8 7	....	Ditto.
Hays John Hill McCully	248 0 0	....	32 2 4	215 13 8	....	215 3 8	....	Ditto.
Hira Lall & Co.	363 0 0	....	43 0 5	319 15 7	....	319 15 7	....	Ditto.
Hill, Charles Atherton (214 of 1925) ..	365 0 0	12 8 1	230 1 4	122 6 7	115 0 0	7 6 7	....	Ditto.
Haramani Ganguly	988 4 0	308 15 7	201 8 7	477 11 10	347 8 10	130 3 0	....	Ditto.
Hemingway, William George	1,798 0 9	279 6 0	276 13 2	1,241 13 7	....	1,085 1 7	156 12 0 No. 2.	Ditto.
Hari Moti Dasi *alias* Hari Dasi ..	450 0 0	114 3 1	150 14 2	184 14 9	115 14 11	68 15 10	....	Ditto.

Hira Lall Dey & Co.	5,341 7 0	117 8 11	1,379 10 0	3,844 4 1	137 0 0	3,707 4 1	....	Ditto.
Hindley, Thomas William	860 0 0	....	382 12 0	477 4 0	....	477 4 0	....	Ditto.
Hari Ram Bungshidhur	296 1 5	....	53 11 9	242 5 8	....	242 5 8	....	Ditto.
Hilton, H. W.	1,634 14 0	....	267 4 10	1,367 9 2	....	1,367 9 2	....	Ditto.
Hafiz Mohamed Shaffi (Proprietor of Haji Ahmed & Sons).	24,036 6 8	16,772 5 9	3,461 6 2	3,802 10 9	1,301 5 10	2,501 4 11	..	Ditto.
Hafiz Meher Ellahi	8,154 4 6	5,451 6 7	1,079 12 3	1,623 1 8	197 9 5	1,425 8 3	....	Ditto.
Hillie Margaret Ada	50 4 0	....	46 4 0	4 0 0	....	4 0 0	....	Ditto.
Habib Abdulla Habib Haji Kara and Abdulla Ali Mohamed.	286 0 6	....	71 4 5	214 12 1	....	214 12 1	....	Ditto.
Hurdeo Dass Jawalaprosad	3,181 4 6	....	478 3 1	2,703 1 5	....	2,703 1 5	....	Ditto.
Hemanta Kumar Dass and Basanta Kumar Dass.	12,296 9 6	7,136 8 0	32 12 0	5,127 5 6	....	5,127 5 6	....	Ditto.
Hunsraj Purusuttum Das (22 of 1930) ..	1,067 15 0	....	1,061 11 0	6 4 0	....	6 4 0	....	Ditto.
Houston, Charles	566 11 1	....	427 5 4	139 5 9	....	139 5 9	....	Ditto.
Hanumanbux Singhania (71 of 1930) ..	2,366 5 11	....	1,254 7 5	1,110 14 6	....	1,100 14 6	....	Ditto.
Hemangini Dasi, S. M. (firm Glass Trading & Co.) (113 of 1930).	2,800 15 8	....	1,252 10 0	1,548 5 8	....	1,548 5 8	....	Ditto.
Houston, James Mackelvey ..	440 4 0	....	109 15 4	330 4 8	....	330 4 8	....	Ditto.
Huyshi, Alfred Edward (197 of 1931) ..	3,720 5 10	1,507 10 8	668 14 2	1,543 13 0	60 0 0	1,483 13 0	....	Outstanding in course of recovery.
Hardeonanda Panda (103 of 1932) ..	562 0 0	....	136 11 10	425 4 2	....	425 4 2	....	Ditto.
Haradhone Tat and Norendra Nath Tat (150 of 1932).	551 2 9	....	121 10 5	429 8 4	....	429 8 4	....	Ditto.
Hardeo Das (163 of 1932)	3,881 3 1	....	1,979 6 11	1,901 12 2	....	1,901 12 2	....	Ditto.
Herdon, Oshert Harold (34 of 1933) ..	91 6 11	....	53 8 9	37 14 2	....	37 14 2	....	Ditto.
Hanumanmull Kodarmull and another (46 of 1933).	725 0 0	....	367 6 8	357 9 4	....	357 9 4	....	Ditto.
Harjibandas Goberdhan Das (48 of 1933) ..	333 1 3	....	132 3 5	200 13 10	....	200 13 10	....	Ditto.
H. P. Chatterjee, Dr. (Captain) (94 of 1933)	50 0 0	....	41 2 0	8 14 0	....	8 14 0	....	Ditto.
Hira Lall Babu Lal (116 of 1933) ..	75 0 0	....	....	75 0 0	....	75 0 0	....	Ditto.
Hrishikesh Bhaduri (132 of 1933) ..	50 0 0	....	....	50 0 0	....	50 0 0	....	Ditto.
Ijad Bux	597 11 3	....	109 11 7	487 15 8	....	487 15 8	....	Ditto.
Ismail Issa Wariwalla	3,187 8 0	603 13 0	265 12 2	2,317 14 10	....	104 7 0	2,213 7 10	Ditto.
Issur Sidheswar Dey and Johur Lall Dey	1,984 10 0	....	1,924 10 0	60 0 0	....	60 0 0	....	Ditto.
Ismail Ibrahim Salejee	25,149 10 5	....	19,399 4 3	5,750 6 2	....	5,750 6 2	....	Ditto.
Ishan Chundra Dhur	694 5 0	....	89 9 5	604 11 7	....	604 11 7	....	Ditto.
Jewandass Jhawar	90,930 15 4	23,521 2 9	61,382 9 8	6,027 2 11	5,245 3 1	781 15 10	2,643 0 1	Nothing further recoverable.
							No. 3.	
Julodhur Shah and Holodhur Shah ..	3,471 7 3	723 5 3	1,129 9 0	1,618 9 0	....	81 3 5	1,537 5 7	Ditto.
							No. 2.	
Jitmull Inderchand..	4,376 6 9	1,624 0 10	1,415 5 7	1,337 0 4	....	....	843 15 7	Ditto.
							No. 2 E. B.— 493 0 9	
Jogendra Nath Bose	505 0 0	....	122 15 0	382 1 0	....	382 1 0	....	Ditto.
Jesraj Bridhichand (243 of 1914) ..	9,738 5 9	7,218 3 5	1,713 1 9	807 0 7	....	106 2 9	700 13 10	Ditto.
							No. 2	
Jones, C.	500 10 0	150 10 9	54 11 6	295 3 9	....	111 13 9	183 6 0	Ditto.
							No. 2.	

Estate.	Whole amount of receipts.	Whole disbursements.		Balance.	Portion of balance applicable to dividends now payable.	Net balance.	Transfers to unclaimed dividend account under rule 175 and section 122 of the P. T. I. Act of 1909.	Probable outturn of the dependencies.
		Dividends paid.	Other payments.					
	Rs. a. p.	Rs. a. p.	Rs. a. p.	Rs. a. p.	Rs. a. p.	Rs. a. p.	Rs. a. p.	
Jotindra Nath Mukherjee	19,001 13 11	14,386 3 5	1,026 2 6	3,589 8 0	....	1,347 4 6	2,242 3 6	Nothing further recoverable.
							No. 3.	
Jiaram (Jiaram Satyanarain) ..	10,036 15 8	7,315 9 9	1,875 11 5	845 10 6	725 4 11	120 5 7	....	Ditto.
Jethasankar Chatturbhuj	7,355 6 2	....	1,007 9 2	6,347 13 0	....	6,347 13 0	....	Ditto.
Jowalaprosad Kaya ..	1,700 0 0	....	747 14 10	952 1 2	....	952 1 2	....	Ditto.
Juggeswardass and Sarada Prosad Dass and others.	758 9 9	....	94 4 2	664 5 7	....	664 5 7	....	Ditto.
Jafferji M. Mohamad Ali	754 3 9	....	115 3 2	639 0 7	....	639 0 7	....	Ditto.
Jan Mahamad Abdul Kader	731 8 0	....	555 7 10	176 0 2	....	176 0 2	....	Ditto.
Johur Lall Roy & Co. (175 of 1922) ..	2,279 1 0	....	653 14 11	1,625 2 1	....	1,625 2 1	....	Ditto.
Jamunadass Ranji	307 8 0	....	115 14 0	191 10 0	....	191 10 0	....	Ditto.
Joydeb Mullick	696 8 0	....	130 2 4	566 5 8	327 15 7	38 6 1	....	Ditto.
Jotindra Nath Nundy	5,315 9 9	....	3,245 10 2	2,069 15 7	....	2,069 15 7	....	Ditto.
Jogendra Nath Kundu	5,992 5 4	....	475 3 8	5,517 1 8	....	5,517 1 8	....	Ditto.
Jugger Nath Daga	3,181 14 3	....	852 7 8	2,329 6 7	....	2,329 6 7	....	Ditto.
Jiban Krishna Laha (49 of 1926) ..	202 10 3	....	88 4 5	114 5 10	....	114 5 10	....	Ditto.
James, Thomas Valentine (116 of 1927) ..	340 0 0	....	70 10 3	296 5 9	170 4 6	99 1 3	....	Ditto.
Jewrajmull Nathmull (136 of 1927) ..	8,807 9 3	....	2,595 10 3	6,211 15 0	....	6,211 15 0	....	Ditto.
James, George Frederick (168 of 1928) ..	23,622 13 9	16,285 5 4	4,611 9 4	2,725 15 1	1,795 7 4	930 7 9	....	Ditto.
Jamuna Das Kanji (172 of 1928) ..	2,473 4 9	53 15 11	413 13 7	2,005 7 3	1,446 5 7	559 1 8	....	Ditto.
James, Percival (5 of 1929)	1,900 0 0	32 6 1	164 13 2	1,702 12 9	1,504 15 11	197 12 10	....	Ditto.
Jamuna Das Tara Chand (120 of 1931) ..	911 15 0	....	147 13 0	764 2 0	....	764 2 0	....	Ditto.
Jewanram, Govindram (137 of 1931) ..	6,362 13 4	....	659 14 10	5,702 14 6	....	5,702 14 6	....	Ditto.
James, Charles (2nd insolvency) ..	161 11 0	22 8 0	49 12 0	89 7 0	77 12 0	11 11 0	....	Ditto.
Jadavji Thakur (Ballav Dass & Co.) (201 of 1930).	1,700 12 9	....	204 2 9	1,496 10 0	833 14 7	662 11 5	....	Ditto.
Jamiruddin Mullick (35 of 1919) ..	400 0 0	....	93 8 0	306 8 0	....	306 8 0	....	Ditto.
Jagan Nath Purohit (106 of 1931) ..	1,495 11 3	36 0 0	488 13 10	970 13 5	....	970 13 5	....	Ditto.
Jitsing Dharam Sing (Bengal Watch Co.) (282 of 1931).	608 10 0	....	172 9 7	436 0 5	....	436 0 5	....	Ditto.
Jotindra Mohan Mitra (11 of 1932) ..	127 15 5	....	46 3 4	81 12 1	....	81 12 1	....	Ditto.
Juggeswar, Hem Chand (Jug Jiban Hem Chand).	1,765 4 0	1,109 0 3	352 1 10	304 1 11	....	....	7 8 8	Outstanding in course of recovery.
							E. B.— 296 9 3	
							No. 2.	
Jnanendra Nath Pramanick (38 of 1933) ..	75 4 4	....	52 11 2	22 9 2	....	22 9 2	....	Ditto.
Johnson, Harold (118 of 1933) ..	50 0 0	....	16 0 0	34 0 0	....	34 0 0	....	Ditto.
Kunja Behary Sen and Ram Ch. Sen ..	12,752 2 0	10,753 0 10	930 8 3	1,069 8 10	....	1,069 8 10	....	Nothing further recoverable.
Kishori Mohun Roy Shaha	30,750 14 7	11,989 9 1	17,888 5 4	875 0 2	....	275 3 2	505 5 2	Ditto.
							No. 2	
							E. B.— 94 7 10	

Kali Das Biswas	71,498 4 2	51,312 11 9	19,558 5 10	125 2 7	....	125 2 7	377 0 0	Ditto.
Kali Charan Dutt	6,149 0 8	4,211 1 7	621 2 2	1,316 12 11	....	1,315 6 9	No. 3. 1 6 2	Ditto.
Karim Moosa	33,201 12 0	....	31,611 9 6	1,590 2 6	....	1,590 2 6	No. 2.	Ditto.
Kunja Behary Pal Chowdhury ..	3,720 12 0	2,409 3 11	1,032 10 1	278 14 0	....	278 14 0	....	Ditto.
Kanai Lall Bhur and Jata Dhary Bhur ..	9,774 15 4	3,291 4 9	3,229 10 5	3,254 0 2	....	885 1 2	2,368 15 0	Ditto.
							No. 2. 5 5 3	
Koylash Chandra Shah and Kedar Nath Shah (K. C. Shah & Co.).	5,398 15 3	2,918 11 7	600 15 3	1,879 4 5	....	414 5 3	No. 3 1,464 15 2	Ditto.
Kanai Lall Joynarain (25 of 1916) ..	5,453 9 9	604 1 6	3,865 2 3	984 6 0	....	....	No. 2. E. B.— 16 2 3 968 3 9	Ditto.
Kissen Lall Iswari Lall	505 8 9	94 15 4	113 4 11	297 4 6	...	....	No. 2. 284 10 7	Ditto.
Karunamoy Chatterjee and Debendra Nath Chatterjee.	8,335 0 0	...	4,910 4 3	3,424 11 9	...	3,424 11 9	No. 2. E. B.— 12 9 11	Ditto.
Kundanmull Gangaram	8,049 14 3	4,712 6 10	2,036 12 2	1,300 11 3	....	1,148 11 11	151 15 4	Ditto.
Kanokendra Nath, Alokendra Nath and Surendra Nath Thakur.	30,939 14 9	23,297 10 4	5,478 13 7	2,163 7 1	....	2,140 6 7	No. 2. 23 0 6	Ditto.
Kheezaree (50 of 1921)	14,973 8 6	1,736 14 0	11,398 1 0	1,838 9 6	569 12 0	1,268 13 6	No. 2.	Ditto.
Kashim Ibrahim Saleji (184 of 1921) ..	1,34,506 11 3	5,928 9 11	1,26,396 10 7	2,181 6 9	1,452 10 1	728 12 8	....	Ditto.
Kanai Lal Sewbux	35,235 8 3	....	35,066 9 1	168 15 2	....	168 15 2	....	Ditto.
Kishori Mohun Ghose (K. M. Ghose & Co.)	1,715 12 6	356 0 9	309 12 9	1,049 15 0	438 11 10	611 3 2	....	Ditto.
Kamal Krishna Singhee (P. accounts) ..	1,606 0 0	1,326 5 1	261 4 0	78 6 11	0 0 5	78 6 6	....	Ditto.
Keshab Lall Dhur, Kanai Lall Dhur & Sons (74 of 1923).	1,346 14 8	200 0 0	992 0 9	....	....	154 13 11	....	Ditto.
Khemjee Kalyanji & Co. (84 of 1923) ..	687 12 3	....	261 11 7	426 0 8	....	426 0 8	....	Ditto.
Krishna Das and Brij Mohun Dass ..	4,561 8 5	....	3,765 4 0	796 4 5	....	796 4 5	....	Ditto.
Karam Chand Dwarka Das and Mani Lall *alias* Dharam Chand (125 of 1924).	760 15 2	....	184 7 3	576 7 11	....	576 7 11	....	Ditto.
Kanti Lall Bose (32 of 1926) ..	572 12 8	....	137 2 4	435 10 4	....	435 10 4	....	Ditto.
Khetsi Shukh Lall and Chand Mull (236 of 1926).	10,971 8 5	6,546 3 5	3,029 0 9	1,396 4 3	17 12 1	1,378 8 2	....	Ditto.
Keatinge, Gilbert	2,772 13 0	1,382 13 5	230 9 4	1,159 6 3	630 0 0	209 5 10	320 0 5	Ditto.
Knight, Frank William (178 of 1927) ..	200 0 0	....	45 0 0	155 0 0	....	155 0 0	No. 2.	Ditto.

Estates.	Whole amount of receipts.	Whole disbursements.		Balance.	Portion of balance applicable to dividends now payable.	Net balance.	Transfers to unclaimed dividend account under rule 175 and section 122 of the P. T. I. Act of 1909.	Probable outturn of the dependencies.
		Dividends paid.	Other payments.					
	Rs. a. p.	Rs. a. p.	Rs. a. p.	Rs. a. p.	Rs. a. p.	Rs. a. p.	Rs. a. p.	
Kerr, Tarruck & Co. (200 of 1927) ..	6,70,018 2 3 (out of this Rs. 44,000 represents encashment of bonds for Rs. 44,000. Rs. 1,320 interest.)	4,23,971 7 5	1,95,066 14 9	50,979 12 1	29,875 15 8	21,103 12 5	....	Nothing further recoverable.
Keshub Lall Mullick	150 0 0	....	88 6 0	61 10 0	....	61 10 0	....	Ditto.
Krael, Edith Agness, Miss (119 of 1928) ..	500 0 0	24 12 5	105 11 0	369 8 7	281 7 4	88 1 3	....	Ditto.
Kambu Bearer	150 0 0	5 15 6	49 3 0	94 13 6	68 10 2	26 3 4	....	Ditto.
Kanhya Lall Protap Sing (30 of 1929) ..	17,975 13 0	5,592 11 2	1,522 13 4	10,860 4 6	3,222 15 7	7,637 4 11	....	Ditto.
Kalkaprosad Sukla & Co. (78 of 1929) ..	4,402 8 9	....	753 1 10	3,649 6 11	....	3,649 6 11	....	Ditto.
Kartick Chundra Paul (86 of 1930) ..	50 0 0	....	49 3 6	0 12 6	....	0 12 6	....	Ditto.
Kerr, Thomas (120 of 1930) ..	673 6 0	124 3 2	162 3 8	386 15 2	331 3 2	55 12 0	....	Ditto.
Krishna Kisore Paul (13 of 1931) ..	305 4 10	....	167 1 4	138 3 6	....	138 3 6	....	Ditto.
Khirode Chundra Hans and Sarat Chundra Hans (New Friends Society) (153 of 1931).	16,095 9 1	....	13,540 8 1	2,555 1 0	....	2,555 1 0	....	Ditto.
Kanhia Lall Khettry and Bhola Nath Khettry (156 of 1931).	666 1 7	....	160 7 8	505 9 11	....	505 9 11	....	Outstanding in course of recovery.
Kerr, Edward Crawshaw ..	200 0 0	....	51 5 3	148 10 9	....	148 10 9	....	Ditto.
Khogendra Chundra Dev (20 of 1931) ..	90 0 0	....	52 14 0	37 2 0	....	37 2 0	....	Ditto.
Keramull Dhariwal Tatia and others ..	591 12 0	....	346 13 0	244 15 0	....	244 15 0	....	Ditto.
Karam Sing (53 of 1932)	153 12 0	....	58 13 3	94 14 9	....	94 14 9	....	Ditto.
Kirorimull Ramji Lall (157 of 1932) ..	350 0 0	....	92 6 2	257 9 10	....	257 9 10	....	Ditto.
Khitish Chundra Chowdhury and Noresh Chundra Chowdhury (67 of 1933).	175 0 0	....	55 0 0	120 0 0	....	120 0 0	....	Ditto.
Kasim Ahmed Oraji (85 of 1933) ..	50 0 0	....	28 0 6	21 15 6	....	21 15 6	....	Ditto.
Kartick Chundra Jana (88 of 1933) ..	551 0 0	....	85 3 5	465 12 7	....	465 12 7	....	Ditto.
Kanmull Lodha (138 of 1933) ..	75 0 0	....	....	75 0 0	....	75 0 0	....	Ditto.
Langley, Frederick Liddle ..	431 5 3	....	49 13 0	381 8 3	....	381 8 3	....	Nothing further recoverable.
Luchmmarain Sriballav Ramprosad Kedernath Roghunath Das Futteh Chand and Moti Lall.	1,300 3 0	....	143 9 8	1,156 9 4	....	1,156 9 4	....	Ditto.
Luchmi Narain Kotary and others ..	8,137 4 6	3,711 1 11	2,448 5 6	1,977 13 1	573 2 4	1,404 10 9	....	Ditto.
Luchmi Das Mathura Das (118 of 1918) ..	1,272 13 7	....	90 1 9	1,182 11 10	....	1,182 11 10	....	Ditto.
Luladhur Lowjee (53 of 1919)	3,464 3 6	1,748 8 8	145 1 2	1,570 9 8	44 4 6	1,526 5 2	....	Ditto.
Lall Chand Nope Chand (Bhagwan Das Marwari) (34 of 1919).	26,375 11 0	13,642 0 3	5,672 7 1	7,061 3 8	763 13 2	489 15 6	5,807 7 0 No. 2.	Ditto.
Le'Fevere, Louis Joseph (57 of 1919) ..	594 9 2	244 0 2	86 11 0	263 14 0	....	76 0 0	187 14 0 No. 2.	Ditto.

Lada Md. and Jaffer Md.	72,650 9 11	28,971 13 6	35,691 8 0	7,687 4 5	....	7,297 11 8	[illegible] 9	Ditto.
				Dr. balance—			No. 2.	
Le'Frank, R. M.	76 8 3	....	91 10 2	15 1 11	....	....	[illegible]	Ditto.
Luchminarain Daulatram	3,601 14 9	....	1,375 10 10	2,226 3 11	....	2,226 3 11	[illegible]	Ditto.
Luddy Nisim Ezra	1,602 9 7	....	139 2 0	1,463 7 7	....	1,463 7 7	....	Ditto.
Levie Ezra Elias and Judah Elias (179 of 1922).	1,552 4 9	....	828 5 3	723 15 6	....	723 15 6	....	Ditto.
Lachiram Bhoiradan (198 of 1924)	3,793 15 11	....	2,378 0 4	1,415 15 7	....	1,415 15 7	....	Ditto.
Lall Mohun Hazra	9,935 0 6	5,918 14 6	857 13 10	3,158 4 2	450 4 8	2,707 15 6	....	Ditto.
Leonard, Alfred Hugh (218 of 1925)	499 0 0	....	106 10 2	392 5 10	....	392 5 10	....	Ditto.
Lucas, James Micho and Charles John Lucas	44,890 10 9 18,082 4 9 (Represents S. P. of G. P. N. and interest.)	1,088 12 6	43,753 5 1	48 9 2	....	....	E. B.— 48 9 2	Ditto.
							315 1 0	
	550 0 0		19,390 0 0				No. 3.	
Lolitmohan Sen (37 of 1929)	1,524 0 0	626 8 7	779 0 5	118 7 0	8 12 1	109 10 11	....	Ditto.
Lyons, John Thomas Fursey	300 0 0	....	71 0 1	228 15 11	205 15 6	23 0 5	....	Ditto.
Ledder, Emile (125 of 1930)	2,527 0 4	762 0 8	1,076 13 0	688 2 8	190 3 4	497 15 4	....	Ditto.
Lorence, W. W. (deceased) (140 of 1930)	6,242 0 7	4,176 5 11	1,871 13 7	393 13 1	248 6 3	145 6 10	....	Ditto.
Luchman Das Burman (Narain Sahai Chotay Lall) (158 of 1930).	1,198 3 5	....	906 0 10	292 2 7	....	292 2 7	....	Ditto.
Lewis, Andrew (185 of 1930)	1,928 12 8	....	1,564 13 7	363 15 1	....	363 15 1	....	Ditto.
Lock, Lock, Geo. E.	167 9 0	....	34 11 0	132 14 0	....	132 14 0	....	Ditto.
Lewis, Guilford Maurice (23 of 1931)	50 0 0	....	47 3 5	2 12 7	....	2 12 7	....	Ditto.
Leeming, Reginald Charles (147 of 1932)	415 0 0	....	63 4 3	351 11 9	....	351 11 9	....	Outstanding in course of recovery.
Le'Bland, Frederick Rudolph (177 of 1932)	50 0 0	....	42 5 9	7 10 3	....	7 10 3	....	Ditto.
Lacke, James Edwin (15 of 1933)	2,210 1 3	....	220 9 9	1,989 7 6	....	1,989 7 6	....	Ditto.
Lane, Nellie, Mrs. (172 of 1922)	148 4 0	....	7 3 6	141 0 6	....	141 0 6	....	Ditto.
Lane, Nellie, Mrs. (27 of 1933)	50 0 0	....	41 13 9	8 2 3	....	8 2 3	....	Ditto.
Luckmi Chand Chhogmull (65 of 1933)	1,150 0 0	....	155 5 0	994 11 0	....	994 11 0	....	Ditto.
Lawton, William (84 of 1933)	90 0 0	....	41 11 9	48 4 3	....	48 4 3	....	Ditto.
Luchmi Narain Mundra (142 of 1933)	50 0 0	....	....	50 0 0	....	50 0 0	....	Ditto.
Mohamed Amin and others (Golam Kader Sawdajuddin) (146 of 1911)	676 1 9	....	156 0 4	520 1 5	....	520 1 5	....	Nothing further recoverable.
Mohadeb Prosad Poddar	1,288 11 3	934 0 8	260 8 7	94 2 0	....	....	E. B.— 94 2 0 548 12 8	Ditto.
Mutty Lal Kundu and Mukunda Lall Kundu	85,451 7 10	73,128 7 1	9,108 13 2	3,214 3 7	1 8 5	3,212 11 2	No. 3. 614 8 3	Ditto.
Mitchell, George Greig (190 of 1912)	60,429 8 8	16,058 7 7	42,403 3 9	1,967 13 4	....	1,967 13 4 1,700 2 11	No. 3.	Ditto.
Monnier, Charles Sinclair	650 0 0	433 10 9	70 3 0	146 2 3	....	G. P. I. 146 [illegible] 3	* 74 3 11	Ditto.
Marshall, William Newbold	2,170 8 0	818 11 11	271 2 10	1,080 9 3	....	1,080 9 3	No. 3. 444 14 11	Ditto.
							No. 3.	

Estates.	Whole amount of receipts.	Whole disbursements.		Balance.	Portion of balance applicable to dividends now payable.	Net balance.	Transfers to unclaimed dividend account under rule 175 and section 122 of the P. T. I. Act of 1909.	Probable outturn of the dependencies.
		Dividends paid.	Other payments.					
	Rs. a. p.	Rs. a. p.	Rs. a. p.	Rs. a. p.	Rs. a. p.	Rs. a. p.	Rs. a. p.	
Miran Saoo ..	613 0 6	....	44 13 5	568 3 1	....	568 3 1	....	Nothing further recoverable.
Mohun Lall Khanna ..	822 9 3	....	281 0 0	541 9 3	....	541 9 3	....	Ditto.
Mohun Lall and others (Hursukroy Nanukram).	850 0 0	....	431 7 3	418 8 9	....	418 8 9	....	Ditto.
Manindra Chandra Seal ..	626 14 0	....	44 0 0	582 14 0	....	582 14 0	....	Ditto.
Martin, Mary Rosaline Edith ..	4,372 5 8	3,560 8 1	370 0 7	441 13 0	....	441 13 0	311 3 2	Ditto.
							No. 3.	
Mohendranath Roy ..	11,479 4 0	5,843 11 1	2,938 11 2	2,696 13 9	....	216 2 4	2,480 11 5	Ditto.
							No. 2.	
							380 4 0	
							No. 3.	
Monmohan Bose (Nilratam Biswanath) ..	2,640 14 0	403 12 0	1,236 0 11	1,001 1 1	....	....	E. B.—	
							53 11 8	
							947 5 5	Ditto.
							No. 2.	
Madan Lal Dura ..	3,074 0 0	303 8 0	1,025 0 9	1,745 7 3	1,400 0 0	345 7 3	....	Ditto.
Millar, Mrs. Catherine (232 of 1927) ..	761 0 0	571 7 9	74 2 11	115 5 4	....	115 5 4	39 1 3	Ditto.
							No. 3.	
Madan Lall Gopal Das ..	2,556 0 9	1,533 6 11	281 7 3	741 2 7	318 7 8	41 14 9	380 12 2	Ditto.
							No. 2.	
Mohamed Iacoob Abdulla (Md. Iacoob & Co.) (38 of 1918).	44,283 7 2	30,779 13 6	10,435 6 11	3,068 2 9	....	350 2 10	2,717 15 11	Ditto.
							No. 2.	
Monnier, G. A. (60 of 1918) ..	2,125 0 0	1,684 13 6	216 1 6	224 1 0	....	7 2 8	216 14 4	Ditto.
							No. 2.	
Mangal Chand (5 of 1919) ..	415 15 0	84 0 0	61 7 7	270 7 5	123 0 0	147 7 5	....	Ditto.
McEvans Joseph Thomas ..	395 0 0	323 4 0	52 12 0	19 0 0	....	....	E. B.—	
							3 6 6	Ditto.
							15 9 6	
							No. 2.	

Minet, John Brissault	1,176	11	6	846	9	10	116	15	3	213	2	5	....	....	E. B.— 1 2 4 212 0 1	Ditto.
M. A. C. Ismail and others (114 of 1920) ..	2,04,265	3	8	1,21,751	1	2	66,128	12	10	16,385	5	8	148 8 0	15,021	2 5 No. 2. 1,215 11 3	Ditto.
Mohamed Saleh Mohamad and another (173 of 1920).	1,536	4	6	....			1,032	2	9	504	1	9	....	504	1 9 No. 2.	Ditto.
Mukunda Lal Debendranath Pal Chowdhury	25,552	11	3	13,813	3	5	1,887	14	6	4,851	9	4	....	465	7 11	4,322 15 5	Ditto.
Mohamed Ishaq (Shaikh Md. Isaq) (92 of 1921).	4,778	1	0	2,356	0	10	525	13	7	1,896	2	7	....	775	14 10	No. 2. 63 2 0 D. C. of 1st D. A. transferred. 1,120 3 9	Ditto.
Mussa Ariff Bham (Ismail Ariff Bham) (Bham & Co.) (198 of 1921).	27,809	14	5	10,682	9	3	15,655	2	8	1,472	2	6	4 8 7	1,467	9 11	No. 2.	Ditto.
Maddan, Charles James ..	1,268	7	0	1,151	3	0	80	5	3	36	14	9	....	....		E. B.— 36 14 9 38 10 0	Ditto.
Mohun Lall Mathura Das ..	675	9	4	....			103	2	6	572	6	10	....	572	6 10	No. 3.	Ditto.
Mackenzie, Robert Louis Wilson (114 of 1922)	3,559	12	0	....			2,462	11	6	1,097	0	6	....	1,097	0 6	....	Ditto.
Mrigendra Lall Mitter (214 of 1922) ..	13,080	2	6	10,753	9	0	924	7	0	1,402	2	6	....	946	10 8	455 7 10	Ditto.
Mohamed Din (218 of 1922) ..	659	7	6	....			93	13	6	565	10	0	....	565	10 0	No. 2.	Ditto.
Mahoney, Terence St. Patrick (20 of 1923)	911	7	6	10	11	7	136	4	9	764	6	8	....	326	9 10	437 12 10	Ditto.
Mangal Chand Nata (50 of 1923) ..	579	15	6	....			69	15	7	509	15	11	....	509	15 11	No. 2.	Ditto.
Magnoni, Bertram Gordon ..	2,056	4	0	1,491	8	9	524	2	2	40	9	1	....	27	15 1	12 10 0	Ditto.
Mowlabux (78 of 1923) ..	5,139	11	8	....			552	14	0	4,586	13	8	....	4,586	13 8	No. 2.	Ditto.
Monoranjan Dhur (132 of 1923) ..	655	6	0	....			188	15	11	466	6	1	305 0 11	161	5 2	....	Ditto.
Mirza Mohamed Mansur Ali Khan (218 of 1923).	1,498	6	6	....			1,275	9	3	222	13	4	....	222	13 3	....	Ditto.
Manly, Horace Hitchins (206 of 1924) ..	374	15	0	291	5	4	50	4	3	33	5	5	22 0 0	11	5 5	....	Ditto.
Maulvie Mohamed Ali (218 of 1924) ..	514	12	4	....			98	8	1	416	4	3	408 12 0	7	8 3	....	Ditto.
Mohan Lall (222 of 1924) ..	1,063	5	6	....			111	3	8	952	1	10	....	951	1 10	....	Ditto.
Madharam Jalf and Amrita Lal Jali (46 of 1922).	643	0	10	....			56	12	0	586	4	10	....	586	4 10	....	Ditto.
Meghji Ratanji (241 of 1924) ..	4,594	2	6	736	8	4	1,868	10	5	1,988	15	9	1,717 10 10	271	6 11	....	Ditto.

Estates.	Whole amount of receipts.	Whole disbursements.		Balance.	Portion of balance applicable to dividends now payable.	Net balance.	Transfers to unclaimed dividend account under rule 175 and section 122 of the P. T. I. Act of 1909.	Probable outturn of the dependencies.
		Dividends paid.	Other payments.					
	Rs. a. p.	Rs. a. p.	Rs. a. p.	Rs. a. p.	Rs. a. p.	Rs. a. p.	Rs. a. p.	
Muth, Louis George ..	700 4 0	3 2 0	105 8 0	591 10 0	257 1 4	334 8 8	....	Nothing further recoverable.
Mirza Mohamed Bakar Ali Khan (190 of 1925).	433 0 0	....	232 10 6	200 5 6	....	200 5 6	....	Ditto.
Manmohan Ghose and Jatindra Mohan Ghose (275 of 1925).	2,111 10 9	338 10 0	135 5 10	1,587 10 11	647 6 9	940 4 2	....	Ditto.
Mohan Lal Kankani ..	5,107 15 0	3,395 9 1	1,260 2 6	452 3 5	354 7 9	97 11 8	....	Ditto.
Mohesh Das Khettry (75 of 1926) ..	2,369 15 0	....	345 1 10	2,024 13 2	....	2,024 13 2	....	Ditto.
Mazharul Islam (122 of 1926) ..	1,049 5 0	....	148 6 10	900 14 2	....	900 14 2	....	Ditto.
Manuk J. M. G. (44 of 1927) ..	15,363 1 9	10,379 9 0	3,855 0 1	1,128 8 8	681 10 7	446 14 1	....	Ditto.
Maniz Anthony Francis Carvellahs (9 of 1927)	1,201 11 0	427 4 11	174 9 8	599 12 5	367 6 5	232 6 0	....	Ditto.
Mahamed Shafi (22 of 1927) ..	794 0 0	....	276 2 3	517 13 9	....	517 13 9	....	Ditto.
Manuk, G. C. S. (149 of 1927) ..	247 10 0	6 14 5	73 12 4	166 15 3	21 4 0	145 11 3	....	Ditto.
Marrow, William James Angus (171 of 1927)	3,571 14 6	....	949 2 2	2,622 12 4	....	2,622 12 4	....	Ditto.
Mohamed Himmut Khan and others (Himmat Khan Changai Khan and Gamani Khan (190 of 1927).	1,91,001 10 0	1,00,277 9 6	75,450 3 6	15,273 13 0	7,102 10 5	8,171 2 7	....	Ditto.
Mohamed Shafiq (6 of 1928) ..	2,393 13 9	811 15 5	651 5 3	930 9 1	418 13 0	511 12 1	....	Ditto.
Manmathanath Roy (30 of 1928) ..	880 3 6	427 5 1	410 4 7	42 9 10	7 4 7	35 5 3	....	Ditto.
Madan Lall Misser (123 of 1928) ..	647 7 6	....	126 11 10	520 11 8	....	520 11 8	....	Ditto.
Manindra Chunder Sil (143 of 1928) ..	135 0 0	....	125 8 8	9 7 4	....	9 7 4	....	Ditto.
Murdoch, William (Firm Murdoch & Co.) (158 of 1928).	411 0 11	....	89 10 5	321 6 6	....	321 6 6	....	Ditto.
Mohendra Chunder Paul, Sarat Chunder Paul, Kristo Kumar and Bhairab Chunder Paul, (223 of 1928).	1,973 2 0	....	1,908 2 0	65 0 0	....	65 0 0	....	Ditto.
Mangal, Chand Agarwalla (224 of 1928) ..	136 4 0	....	50 9 0	85 11 0	....	85 11 0	....	Ditto.
Maher, Joseph Robert (227 of 1928) ..	250 0 0	....	59 6 0	190 10 0	....	190 10 0	....	Ditto.
Madan Lall Luchminarain (63 of 1929) ..	3,652 15 1	....	778 6 6	2,874 8 7	....	2,874 8 7	....	Ditto.
Madharam, Rajendra Prosad (65 of 1929) ..	3,541 3 4	....	2,306 3 6	1,234 15 10	....	1,234 15 10	....	Ditto.
Mangi Lal and Gangadhar *alias* Gangadhar *alias* Gangabux (133 of 1929)	145 4 0	....	73 4 4	71 15 8	....	71 15 8	....	Ditto.
Martindale Gabriel Robert Louis (131 of 1929).	75 0 0	....	65 7 9	9 8 3	....	9 8 3	....	Ditto.
Maharaja Kissore Khanna (163 of 1929) ..	9,467 4 2 2,593 6 3 Represents advance from U.D.R. account.	....	9,459 9 11	7 10 3	....	7 10 3	....	Ditto.
Monnier, Rudolph Scipio (160 of 1929) ..	4,629 1 4	....	2,651 8 0	1,977 9 4	....	1,977 9 4	....	Ditto.
Madan Lall Dwarka (45 of 1930) ..	50 0 0	....	29 4 0	20 12 0	....	20 12 0	....	Ditto.

Mingail Henry Brooke (122 of 1930) ..	340 11 7	....	103 13 1	236 14 6	....	236 14 6	....	Ditto.
Mohadeo Prosad Kanodia (166 of 1930) ..	189 14 [illegible]	....	50 4 10	139 9 2	....	139 9 2	....	Ditto.
McGregor, A (210 of 1930) ..	748 8 6	....	510 13 9	237 10 3	....	[illegible] 10 3	....	Ditto.
Mathew, Richard Alfred (218 of 1930) ..	610 9 0	92 5 0	87 8 6	430 11 6	418 15 5	11 12 1	....	Ditto.
Mahamed Faruq (6 of 1931) ..	10,514 14 8	....	1,427 9 5	9,087 5 3	....	9,087 5 [illegible]	....	Ditto.
Mackenzie, W. Raymond ..	650 4 0	61 6 7	119 0 3	469 13 2	244 10 1	225 3 1	....	Ditto.
Medlycott, S. R. (29 of 1931) ..	1,350 7 6	116 1 3	222 4 6	1,012 1 9	845 7 5	166 10 4	....	Ditto.
Madhojee Kalyanjee (44 of 1931) ..	50 0 0	....	23 8 5	26 7 7	....	26 7 7	....	Ditto.
Madan Lal Purohit and Rupchand Purohit (60 of 1931)	803 8 0	120 0 0	227 4 5	456 3 4	....	456 3 4	....	Ditto.
Maiden, Charles James Dick (76 of 1931) ..	250 8 0	....	52 13 0	197 11 0	....	197 11 0	....	Ditto.
Mangal Das Dwarka Das (78 of 1931) ..	308 0 2	....	83 2 10	224 13 4	....	224 13 4	....	Ditto.
McLaughlin, Andrew (110 of 1931) ..	100 0 0	....	48 1 9	51 14 3	....	51 14 3	....	Ditto.
Maurice, Panoyalis (133 of 1931) ..	513 12 0	....	147 1 8	366 10 4	86 10 0	280 0 4	....	Ditto.
M. V. Md. Yusuff .	104 6 2	....	70 4 4	34 1 10	....	34 1 10	....	Ditto.
Monnier, L. A. ..	343 12 0	....	58 14 8	284 13 4	....	284 13 4	....	Ditto.
Murally Dhur Auddy (263 of 1911) ..	209 8 0	....	86 7 4	123 0 8	....	123 0 8	....	Ditto.
Manly, Marvya Evelyn (271 of 1931) ..	330 0 0	....	56 13 0	273 3 0	....	273 3 0	....	Ditto.
Mayers, Sylvester Adrian (267 of 1931) ..	475 0 0	....	82 5 4	392 10 8	286 1 11	106 8 9	....	Ditto.
Mohesh Chunder Auddy (270 of 1931) ..	3,078 11 6	....	1,564 5 0	1,514 6 6	....	1,514 6 6	....	Ditto.
Meghraj Surana and others (284 of 1931) ..	387 4 0	....	268 11 11	118 8 1	....	118 8 1	....	Ditto.
Mann, Henry William Thomas (7 of 1932) ..	570 13 0	....	569 7 9	1 5 3	....	1 5 3	....	Outstanding in course of recovery.
Mohamed Hasan (37 of 1932) ..	148 12 0	....	65 3 5	83 8 7	....	83 8 7	....	Ditto.
Md. Yacoob Md. Faruq (68 of 1932) ..	2,746 15 3	....	1,461 0 7	1,285 14 8	....	1,285 14 8	....	Ditto.
Mangal Chand Gobind Lal (78 of 1932) ..	11,771 1 0	....	920 11 10	10,850 5 2	....	10,850 5 2	....	Ditto.
Manuel, A. E. ..	238 1 8	103 7 7	46 0 0	88 10 1	....	....	58 2 0	Ditto.
							No. 2. D. C. 1st Division 8 1 8	
							E. B.— 22 6 5	
Martin Bros. (168 of 1932) ..	38,124 15 8	467 11 3	3,160 12 6	34,496 7 11	...	34,496 7 11	....	Ditto.
Miller Kemp—(201 of 1932) (a firm, Pro. David Glen Miller and William Albert Kemp).	5,433 10 2	314 15 4	1,496 15 3	3,621 11 7	....	3,621 11 7	....	Ditto.
Malam Chand Wannalal (55 of 1933) ..	528 5 6	....	343 2 1	185 3 5	....	185 3 5	....	Ditto.
Musaji Hossain Asmal (190 of 1932) ..	39,582 7 6	....	2,698 6 3	36,884 1 3	....	36,884 1 3	....	Ditto.
Mirza Abdul Kashim (96 of 1933) ..	50 0 0	....	38 11 0	11 5 0	....	11 5 0	....	Ditto.
McCarthy, Gerald (98 of 1933) ..	50 0 0	....	39 6 0	10 10 0	....	10 10 0	....	Ditto.
McArthur, F. G. ..	690 0 0	441 8 0	149 0 3	99 7 9	....	....	31 14 2	Nothing Further recoverable.
							E. B.— 67 9 7	
							No. 2.	
Nishi Kanta Banerjee ..	812 8 0	....	240 2 6	572 5 6	....	572 5 6	....	Ditto.
Nahapiet, M. M. ..	4,552 6 10	....	2,420 13 4	2,131 9 6	....	2,131 9 6	....	Ditto.
Nando Lall Shaw ..	1,653 11 0	....	383 0 7	1,270 10 5	....	1,270 10 5	....	Ditto.
Nerodenath Mookerjee ..	19,460 0 0	14,345 12 1	2,549 11 5	2,564 8 6	....	2,564 8 6	....	Ditto.
N. C. and A. I. Mazumdar ..	1,792 13 10	....	219 14 9	1,572 15 1	....	1,572 15 1	....	Ditto.
Narendra Kumar Dutt ..	421 1 4	....	90 15 10	330 1 6	....	330 1 6	....	Ditto.
Nahapiet Seth Nahapiet and another ..	2,502 8 7	208 8 0	858 8 8	1,435 7 11	....	1,435 7 11	....	Ditto.
Nope Chand ..	391 9 3	....	81 11 9	309 13 6	....	309 13 6	....	Ditto.
Narain Das Agarwalla ..	222 10 0	....	94 7 1	128 2 11	....	128 2 11	....	Ditto.

Estates.	Whole amount of receipts.	Whole disbursements.		Balance.	Portion of balance applicable to dividends now payable.	Net balance.	Transfers to unclaimed dividend account under rule 175 and section 122 of the P. T. I. Act of 1909.	Probable outturn of the dependencies.
		Dividends paid.	Other payments.					
	Rs. a. p.	Rs. a. p.	Rs. a. p.	Rs. a. p.	Rs. a. p.	Rs. a. p.	Rs. a. p.	
Nathoomull Khettry ..	119 2 9	....	12 9 4	106 9 5	....	106 9 5	....	Nothing further recoverable.
Nagoremull and another (195 of 1915) ..	524 9 3	....	48 12 1	475 13 2	....	475 13 2	....	Ditto.
Nilmoney Jana and Sarada Prosad Shah (8 of 1916). ..	9,604 11 11	....	8,607 3 10	997 8 1	....	997 8 1	....	Ditto.
Nagendranath Chatterjee ..	330 0 0	....	47 15 10	282 0 2	....	282 0 2	....	Ditto.
Narendranath Bose ..	1,22,268 13 9	1,05,725 1 7	15,779 2 0	764 10 2	....	365 12 10	398 13 4	Ditto.
							No. 2.	
Nittya Nando Das (54 of 1930) ..	640 0 0	....	55 6 8	584 9 4	....	584 9 4	....	Ditto.
Namey, Charles Lewis ..	934 1 9	577 3 3	94 3 7	262 10 11	....	262 10 11	....	Ditto.
Nittya Nando Goswami (68 of 1919) ..	2,205 6 1	....	166 2 3	2,039 3 10	....	2,039 3 10	....	Ditto.
Nam Chand (57 of 1921) ..	1,092 1 0	....	897 1 2	194 15 10	....	194 15 10	....	Ditto.
Narain Das (153 of 1921) ..	4,121 1 6	100 0 0	1,270 9 3	2,750 8 3	....	2,750 8 3	....	Ditto.
Nittyanando Kundu ..	228 12 0	....	55 8 4	173 3 8	....	173 3 8	....	Ditto.
Nishi Kanta Chatterjee ..	1,617 11 0	....	1,535 14 6	81 12 6	....	81 12 6	....	Ditto.
Nilamber Shaw (134 of 1922) ..	610 0 0	....	124 4 0	485 12 0	....	485 12 0	....	Ditto.
Narain Das Dayal (150 of 1910) ..	5,065 7 11	3,111 0 7	1,435 6 0	519 1 4	....	494 14 2	24 3 2	Ditto.
							E. B.—	
Newbery, Charles Alfred ..	459 12 0	....	83 13 9	375 14 3	....	375 14 3	....	Ditto.
Nibaran Chander Dutt (88 of 1923) ..	15,187 11 1	8,049 11 8	2,760 7 0	4,377 8 5	....	2,607 5 8	1,770 2 9	Ditto.
							No. 2.	
Nathuram Charwan Bros. (150 of 1923) ..	534 12 6	....	231 5 9	303 6 9	....	303 6 9	....	Ditto.
Nilmoney Nag (159 of 1923) ..	509 8 0	....	46 4 5	463 3 7	....	463 3 7	....	Ditto.
Netai Charan Ghose (267 of 1923) ..	266 12 0	....	65 5 4	201 6 8	....	201 6 8	....	Ditto.
Nripendra Kumar Ghose (219 of 1924) ..	723 8 3	....	65 10 5	657 13 10	....	657 13 10	....	Ditto.
Nala Subaroo Bros. ..	250 0 0	....	26 8 8	223 7 4	....	223 7 4	....	Ditto.
Naba Kristo Girish Chandra Das Chandi Charan Das (97 of 1925)	454 0 0	....	49 10 2	404 5 10	....	404 5 10	....	Ditto.
Nani Lall Bakuli (141 of 1925) ..	210 0 0	....	79 8 4	130 7 8	....	130 7 8	....	Ditto.
Nundo Kishore Brij Mohun (152 of 1925) ..	432 0 2	....	71 15 3	360 0 11	....	360 0 11	....	Ditto.
Nibaran Chandra Indra and Benode Behary Mitter (192 of 1925)	1,115 3 9	....	178 13 10	936 5 11	....	936 5 11	....	Ditto.
Nolin Chunder Show (265 of 1925) ..	2,955 0 10	....	860 9 6	2,094 7 4	....	2,094 7 4	....	Ditto.
Nripendranath Bose (6 of 1926) ..	415 6 0	....	82 12 11	332 9 1	....	332 9 1	....	Ditto.
Narainram Bhagwanram (51 of 1926) ..	279 15 9	....	87 10 5	192 5 4	....	192 5 4	....	Ditto.
Nanda Lal Dhara (201 of 1926) ..	50 0 0	....	23 2 0	26 14 0	....	26 14 0	....	Ditto.
Nishi Kanto Sarker (232 of 1926) (Firm Hem-Chunder Sarker and Bogalamani Bastralaya).	9,406 10 6	5,070 2 3	1,230 1 9	3,106 6 6	1,384 15 4	1,721 7 6	....	Ditto.
Nogendra Nath Ghose and Abadknta Charan Ghose (214 of 1930).	72 0 0	....	60 10 9	11 5 3	....	11 5 3	....	Ditto.
Nani Gopal Mookerjee (3 of 1931) ..	54 0 0	....	52 8 0	1 8 0	....	1 8 0	....	Ditto.

Nripendra Kumar Bose (16 of 1929) ..	13,796 0 6	8,073 0 8	2,377 2 1	3,345 13 9	93 9 9	3,252 4 0	....	Ditto.
Nell, Cecil Newton (24 of 1929) ..	860 11 4	369 6 3	335 7 0	155 14 1	150 0 0	5 14 1	....	Ditto.
Nagormull (Onkarmull Nagormull) ..	1,270 13 0	....	406 1 6	864 11 6	....	864 11 6	....	Ditto.
Nalinakhya Tath & Co.	2,018 3 4	....	1,088 6 6	929 12 10	....	929 12 10	....	Ditto.
Nittyanundo Jogobundhoo Saha Chaitan Charan Saha, Hrishikesh Saha (Firm Jeeban Kristo Nittyanundo).	300 0 0	....	13 2 3	286 13 9	....	286 13 9	....	Ditto.
Nilmoney Chatterjee (Firm Chatterjee and Das.) (202 of 1929).	391 3 0	....	162 6 10	228 12 2	....	228 12 2	....	Ditto.
Nritya Gopal Chaki (72 of 1930) ..	265 0 0	....	81 8 0	183 8 0	....	183 8 0	....	Ditto.
Naroji Jamshedji Bilmoira (64 of 1930) ..	217 15 0	....	138 4 0	79 11 0	....	79 11 0	....	Ditto.
Nalini Mohan Ghose (67 of 1930) ..	75 0 0	....	57 6 0	17 9 7	....	17 9 7	....	Ditto.
Narsing Das Soni	4,598 12 0	....	885 7 6	3,713 4 6	....	3,713 4 6	....	Outstanding in course of recovery.
Norendra Nath Banerjee (215 of 1932) ..	309 0 0	....	296 7 9	12 8 3	....	12 8 3	....	Ditto.
Norottum Das Guzratee (205 of 1932) ..	50 0 0	....	40 6 6	9 9 6	....	9 9 6	....	Ditto.
Nyss, William Brightman Samuel (133 of 1933).	50 0 0	....	....	50 0 0	....	50 0 0	....	Ditto.
Ochey Lall	187 8 9	....	57 6 0	130 2 9	....	130 2 9	....	Nothing further recoverable.
Oakshott, Arthur Charles	4,918 2 0	3,641 12 5	901 8 0	374 13 7	....	282 10 10	92 2 9	Ditto.
							No. 2.	
Onkermull Shroff (81 of 1928) ..	3,138 10 10	....	757 2 10	2,381 8 0	....	2,381 8 0	....	Ditto.
Owen, Charles Byrne (130 of 1929) ..	655 0 0	463 8 4	154 8 0	36 15 8	23 14 3	13 1 5	....	Ditto.
Occonnar, I. A. ..	2,280 0 0	1,594 8 0	181 7 0	504 1 0	91 5 0	412 12 0	....	Ditto.
Obrien, Ernest Clarence	3,884 11 3	....	758 11 5	3,125 15 10	....	3,125 15 10	....	Ditto.
Oakshott, Douglas Benjamin Coustney (129 of 1933).	50 0 0	....	....	50 0 0	....	50 0 0	....	Ditto.
Purendra Nath Sen	1,683 4 1	....	849 12 0	833 8 1	....	833 8 1	....	Ditto.
Pimm, J.	913 0 0	54 3 0	555 4 5	303 8 7	....	301 4 7	2 4 0	Ditto.
Partridge, Thomas William and Charlotte Auguste Partridge (Partridge & Co.).	5,120 1 0	3,923 6 0	1,083 14 2	107 12 10	....	107 12 10	No. 2. 239 8 3	Ditto.
Perot, A. W.	9,671 4 10	4,349 7 1	2,770 2 10	2,551 10 11	....	525 7 4	No. 3. 2,026 3 7	Ditto.
Parbutty Charan Ash and Johur Lall Ash ..	654 11 6	....	57 5 8	597 5 10	....	597 5 10	No. 2.	Ditto.
Pulin Behary Sarkar	233 12 9	....	33 8 0	200 4 9	....	200 4 9	....	Ditto.
Palmer, Edward Thomas	789 0 0	344 5 11	172 5 2	272 4 11	....	....	E. B.— 9 7 4 262 13 7	Ditto.
Prowling, Albert	330 0 0	243 3 0	50 12 0	36 1 0	....	....	No. 2. E. B.— 2 9 0 33 8 0	Ditto.
Prem Lall Dhur (deceased)	16,534 3 3	9,533 14 4	6,728 11 2	271 9 9	..	....	No. 2. E. B.— 25 2 11 246 6 10	Ditto.
							No. 2.	

Estates.	Whole amount of receipts.	Whole disbursements.		Balance.	Portion of balance applicable to dividends now payable.	Net balance.	Transfers to unclaimed dividend account under rule 175 and section 122 of the P. T. I. Act of 1909.	Probable outturn of the dependencies.
		Dividends paid.	Other payments.					
	Rs. a. p.	Rs. a. p.	Rs. a. p.	Rs. a. p.	Rs. a. p.	Rs. a. p.	Rs. a. p.	
Pronob Kumar Tagore	1,075 0 0	....	158 4 0	916 12 0	....	916 12 0	....	Nothing further recoverable.
Purno Chunder Das and Nundo Lall Das (63 of 1930).	7,251 15 0	....	5,163 13 6	2,088 1 6	....	2,088 1 6	....	Ditto.
Probodh Chunder Roy (107 of 1920) ..	2,358 0 0	1,764 7 9	50 9 6	341 14 9	....	211 15 2	129 15 7	Ditto.
							No. 2.	
Panna Lall Chundak and 13 others ..	276 5 0	....	33 0 0	243 5 0	....	243 5 0	....	Ditto.
Peary Shaw and Frashat Hossain (Receiver)	1,330 0 0	....	156 7 7	1,173 8 5	....	1,173 8 5	....	Ditto.
Poresh Chunder Bose (132 of 1920) ..	2,899 1 3	1,448 7 3	1,030 6 10	420 3 2	....	155 11 4	264 7 10	Ditto.
							No. 2.	
Purun Chand Hurruck Chand Surujmull Mangal Chand (36 of 1921).	23,480 14 6	12,711 15 4	9,640 1 4	1,028 13 10	....	210 0 0	918 13 10	Ditto.
							No. 2.	
Parnell, R. J. (200 of 1921)	1,550 0 0	1,189 8 8	201 4 2	159 3 2	....	56 2 10	103 0 4	Ditto.
							No. 2.	
Prafulla Chunder Deb and another (203 of 1921).	3,468 9 3	1,781 6 6	295 7 6	1,391 11 3	765 14 4	625 12 11	....	Ditto.
Potta Steel & Co.	2,957 10 4	1,143 8 11	758 11 3	1,055 6 2	....	1,013 6 7	41 15 7	Ditto.
							No. 2.	
Profulla Chunder Dutt (204 of 1922) ..	1,222 0 9	....	205 4 1	1,016 12 8	....	1,016 12 8	....	Ditto.
Purusuttum Lall (233 of 1922) ..	66 14 9	....	54 12 10	12 1 11	....	12 1 11	....	Ditto.
Purusottum Veljee and Khem Chand Veljee (9 of 1923).	562 13 9	258 2 4	123 4 8	181 6 9	....	49 10 4	131 12 5	Ditto.
							No. 2.	
Punchanan Dawn (51 of 1923) ..	510 0 0	....	123 14 0	386 2 0	....	386 2 0	....	Ditto.
Preonath Ghose (71 of 1923) ..	235 5 9	111 3 6	65 9 10	58 8 5	....	55 6 5	3 2 0	Ditto.
							No. 2.	
Pilcher. H. F. (124 of 1923) ..	3,722 3 2	....	3,414 11 5	307 7 9	....	307 7 9	....	Ditto.
Phanindro Nath Dutt (P. N. Dutt & Co.) (167 of 1923).	535 3 11	....	182 8 2	352 11 9	....	352 11 9	....	Ditto.
Pugh, Stuart Edmanstone (186 of 1923) ..	530 0 0	....	268 0 0	244 0 0	....	244 0 0	....	Ditto.
Probhat Chunder Mitra (134 of 1914) ..	94 14 6	....	78 3 9	16 10 9	....	16 10 9	....	Ditto.
Phillpsz Bertram S. (136 of 1924) ..	1,055 0 0	184 3 8	341 11 3	529 1 1	362 15 2	1 4 0	164 13 11	Ditto.
							No. 2.	
Probodh Chunder Banerje (159 of 1924) ..	2,800 2 9	1,470 4 0	521 0 0	808 14 9	....	194 11 4	614 3 5	Ditto.
							No. 2.	

Probodh Chunder Pramanick and Baidyanath Pramanick (60 of 1925).	811 5 3	....	152 6 4	658 14 11	....	658 14 11	....	Ditto.
Phul Chand Johurmull (89 of 1925) ..	11,460 10 11	8,940 2 9	1,625 10 9	394 13 5	....	894 13 5	....	Ditto.
Panna Lall Sreekisen (98 of 1925) ..	44,695 10 3	40,316 10 1	2,780 4 2	1,508 12 0	959 0 11	66 12 6	482 14 7	Ditto.
							No. 2.	
Profulla Kumar Chowdhury (265 of 1925)	50 0 0	....	24 11 6	25 4 6	....	25 4 6	....	Ditto.
Protap Chand Agarwalla (117 of 1926) ..	2,175 8 0	1,253 9 3	402 6 3	519 8 6	125 0 3	394 8 3	....	Ditto.
Pascal, G. A. S. (211 of 1926) ..	300 0 0	....	64 12 0	235 4 0	....	235 4 0	....	Ditto.
Pandit Tilak Chand (231 of 1926) ..	50 0 0	....	41 9 0	8 7 0	....	8 7 0	....	Ditto.
P. N. Dutt & Co. (38 of 1927) ..	24,989 10 3	11,061 9 0	3,657 13 3	10,270 4 0	1,351 9 8	8,918 10 4	....	Ditto.
Pursotham Das (43 of 1928) ..	111 2 6	....	32 14 9	78 3 9	....	78 3 9	....	Ditto.
Pote, William Arnold Stephen (59 of 1923)	65 0 0	....	49 13 0	15 3 0	....	15 3 0	....	Ditto.
Phani Bhusan Banerjee (197 of 1927) ..	277 7 0	....	59 4 11	218 2 1	....	218 2 1	....	Ditto.
Probodh Chunder Sur (163 of 1928) ..	11,438 0 10	9,799 14 1	....	....	141 7 7	353 3 3	....	Ditto.
Poresh Nath Banerjee (215 of 1928) ..	2,400 0 0	1,127 3 8	213 4 11	1,059 11 5	414 1 9	645 9 8	....	Ditto.
Panchanan Sirkar (57 of 1929) ..	92,140 8 7	85,130 0 8	6,565 7 11	445 0 0	445 0 0	....	....	Ditto.
Perry, Nathan (55 of 1929) ..	1,165 8 0	....	1,599 5 10	16 2 2	....	16 2 2	....	Ditto.
Prantosh Sing	292 0 0	....	45 1 4	246 14 8	....	246 14 8	....	Ditto.
Purusottum Das Kedarnath ..	469 0 9	....	165 1 6	303 15 3	....	303 15 3	....	Ditto.
Provas Chunder Saha (24 of 1930) ..	155 0 0	....	83 9 7	71 6 5	....	71 6 5	....	Ditto.
Provash Chunder Banerjee (48 of 1930) ..	75 0 0	....	53 6 4	21 9 8	....	21 9 8	....	Ditto.
Price, Gerald Henry (152 of 1930) ..	1,067 11 4	186 9 4	178 8 3	702 9 9	541 0 4	161 9 5	....	Ditto.
Purno Chunder Kundu (172 of 1936) ..	475 0 0	....	130 12 0	344 4 0	....	344 4 0	....	Ditto.
Peer Bux (199 of 1930) ..	117 8 0	....	63 3 0	54 5 0	....	54 5 0	....	Ditto.
Parish, William Esart ..	455 0 0	....	85 12 0	369 4 0	....	369 4 0	....	Outstanding in course of recovery.
Purusottam Das Barman (12 of 1931) ..	3,113 13 10	142 0 0	329 8 11	2,642 4 11	....	2,642 4 11	....	Ditto.
Payne, William Clifford (176 of 1931) ..	550 0 0	....	88 1 0	461 15 0	....	461 15 0	....	Ditto.
Pragdas Pachasia and Gungadas Pachasia (254 of 1931).	3,031 6 9	....	327 9 5	2,703 13 4	....	2,703 13 4	....	Ditto.
Purna Chundra Barman and Satis Chandra Barman (19 of 1932).	50 0 0	....	49 15 6	0 0 6	....	0 0 6	....	Ditto.
Purushottam Damodar, known as P. D. Trikunjee, Proprietor of Favourite Soap Works.	131 8 0	....	59 7 8	72 0 4	....	72 0 4	....	Ditto.
Premji Ramji (33 of 1933) ..	2,023 6 7	....	304 12 11	1,718 9 8	....	1,718 9 8	....	Ditto.
Purendra Mohun Ghosh (123 of 1922) ..	300 0 0	....	15 0 0	285 0 0	....	285 0 0	....	Ditto.
Pokermull Narsaria and Ram Kumar Narsaria, Firm Premsuk Dass Ram Kumar (99 of 1933).	50 0 0	....	25 15 6	24 0 6	....	24 0 6	....	Ditto.
Pruce, Douglas Oswald (131 of 1933) ..	50 0 0	....	....	50 0 0	....	50 0 0	....	Ditto.
Rai Mohun Shaw and others (Hari Das Gopal Kristo Shaw) (150 of 1911).	2,93,641 8 9	1,69,776 13 2	1,12,063 8 5	11,801 3 2	....	8,705 12 8	3,095 6 6	Nothing further recoverable.
							No. 2. 2,179 5 7	
Remfry, John Edward	161 0 0	33 4 6	35 13 0	91 14 6	....	74 8 4	No. 3. 17 6 2	Ditto.
Radha Raman Mullick	3,656 3 1	2,856 5 3	532 5 0	267 8 10	....	....	No. 2. E. B.— 31 5 10 236 3 0	Ditto.
							No. 2.	

Estates.	Whole amount of receipts.	Whole disbursements.		Balance.	Portion of balance applicable to dividends now payable.	Net balance.	Transfers to unclaimed dividend account under rule 175 and section 122 of the P. Act of 1909.	Probable outturn of the dependencies.
		Dividends paid.	Other payments.					
	Rs. a. p.	Rs. a. p.	Rs. a. p.	Rs. a. p.	Rs. a. p.	Rs. a. p.	Rs. a. p.	
Ram Deo (Delsuk Roy Behary Lall) (16 of 1914).	2,181 7 3	....	198 0 6	1,983 6 9	....	1,983 6 9	....	Nothing further recoverable.
Ram Kissen Das Surajmull ..	5,712 7 2	4,500 4 7	441 9 7	770 9 0	....	106 8 9	664 0 3	Ditto.
							No. 2. 635 13 3	
Roger, R. V.	642 0 0	190 12 9	109 13 1	341 6 2	....	81 5 10	No. 3. 260 0 4	Ditto.
Rash Behary Das	2,825 4 3	1,437 6 3	561 7 0	826 7 0	....	315 0 5	No. 2. 511 6 7	Ditto.
Richardson, James Blisset ..	965 0 0	512 11 2	85 15 6	367 5 4	....	121 15 7	No. 2. 245 5 9	Ditto.
Rambux Agarwalla	404 4 0	....	182 14 4	221 5 8	....	221 5 8	No. 2.	Ditto.
Ramprosad Sudhir and Nalini Mohun Kundoo (100 of 1912).	13,515 4 11	3,902 15 8	3,978 1 0	5,634 4 3	1,755 12 1	3,820 5 11	58 2 3	Ditto.
							No. 2.	
Rai Mohun Shaw and others (Bhairub Chunder Khettro Mohun).	10,000 0 0	6,008 6 6	100 2 6	3,891 7 0	....	1,834 7 5	2,047 15 7	Ditto.
Ram Protap Brijmohun	2,033 1 3	498 15 9	395 5 5	1,138 12 1	....	1,114 8 7	No. 2. 24 3 6	Ditto.
							No. 2.	
Rajendra Nath Das (75 of 1922) ..	138 0 6	....	39 3 5	98 13 1	....	98 13 1	....	Ditto.
Ram Gopal Khemka (136 of 1920) ..	907 5 6	....	312 14 5	594 7 1	....	594 7 1	....	Ditto.
Rajaram (Srigobindram Rajaram). ..	590 13 9	....	79 10 4	511 3 5	....	511 3 5	....	Ditto.
Radha Nath Chunder	4,07,047 13 7	1,14,663 11 4	2,88,554 1 4	3,830 0 11	2,881 4 2	702 0 11	246 11 10	Ditto.
Robinson, A. M.	4,363 8 2	3,357 7 9	937 6 3	68 10 2	....	61 10 5	No. 2. E. B.— 6 15 9 214 9 5	Ditto.
							No. 3.	
Ram Narain Daga	22,704 3 9	11,204 7 3	5,894 0 8	5,605 11 10	2,298 12 9	3,306 15 1	....	Ditto.
Ram Prosad Mullick (85 of 1923)	7,271 11 0	....	6,024 13 0	1,246 14 0	....	1,246 14 0	....	Ditto.

Raj Kumar Mukherjee (162 of 1923)	6,237 4 0	2,998 15 6	496 5 1	2,741 15 5	....	1,252 9 3	1,489 6 2	Ditto.
							No. 2.	
Ramnarain Mathore (21 of 1924) ..	391 8 0	....	80 11 7	310 12 5	171 11 8	139 0 9	....	Ditto.
Ram Kissen Joy Doyal (64 of 1924) ..	1,592 15 0	....	176 8 3	1,416 6 9	....	1,416 6 9	....	Ditto.
Ramnibash Serowgi (Sewdutt Rai Ramnibash) (61 of 1924).	1,245 3 3	....	152 8 5	1,092 10 10	....	1,092 10 10	....	Ditto.
Rameswar Jhabarmull Prolhad Roy (27 of 1925) (Balkisendas Jhabarmull).	16,503 1 6	11,245 8 5	2,572 8 5	2,685 0 8	2,481 8 6	203 8 2	....	Ditto.
Rakhal Chunder Dawn	7,968 2 0	180 0 0	2,061 0 8	5,727 1 4	....	5,727 1 4	....	Ditto.
Ram Prosonno Mookerjee (207 of 1925) ..	1,714 4 3	....	308 11 7	1,405 8 8	....	1,405 8 8	....	Ditto.
Ramesh Chandra Chatterjee (236 of 1925)	160 5 4	....	72 7 2	87 14 2	....	87 14 2	....	Ditto.
Ramjee Mohamed (Adam Sajan & Co.) (224 of 1925).	264 9 5	....	61 13 2	202 12 3	....	202 12 3	....	Ditto.
Rolfe, John Herbert Herman	8,058 1 1	5,577 4 6	1,108 15 10	1,371 12 9	837 2 7	74 0 0	460 10 2	Ditto.
							No. 2.	
Reynold, V. O. (10 of 1926)	610 0 0	110 6 10	145 5 0	354 4 2	326 12 9	27 7 5	....	Ditto.
Ram Protap Ridcurn (214 of 1926) ..	9,150 10 0	....	3,938 11 8	5,211 14 4	....	5,211 14 4	....	Ditto.
Rajaram Shah (244 of 1926)	180 0 0	....	89 2 8	90 13 4	....	90 13 4	....	Ditto.
Ram Sattya Dutt (21 of 1927) ..	1,097 7 3	....	447 2 7	650 4 8	....	650 4 8	....	Ditto.
Ram Chunder Chouthmull	156 0 0	....	92 6 4	63 9 8	....	63 9 8	....	Ditto.
Runchore Das Murarjee also called Runchore Murarjee & Co. (29 of 1927).	30,292 15 5	11,888 13 8	10,685 4 8	7,718 13 1	4,383 8 4	3,335 4 9	....	Ditto.
Robinson, Arthur Lenon (65 of 1927) ..	550 0 0	....	327 14 10	222 1 2	....	222 1 2	....	Ditto.
Ram Kumar Sen (105 of 1928) ..	1,267 0 0	1,072 10 10	174 14 0	19 7 2	....	19 7 2	....	D tto.
Ruhini Kanto Roy (49 of 1928) ..	290 0 0	....	82 15 0	207 1 0	....	207 1 0	....	Ditto.
Raja Hossain (91 of 1928)	476 0 0	....	100 5 9	375 10 3	....	375 10 3	....	Ditto.
Ram Narain Sree Kissen (100 of 1928) ..	250 0 0 200 0 0 Advance from U. D. account.	....	39 14 9	210 1 3	....	210 1 3	....	Ditto.
Ram Chunder Singhi (102 of 1928) ..	1,100 0 0	....	471 5 6	628 10 6	....	628 10 6	....	Ditto.
Ramji Das Kissen Chand (18 of 1928) ..	1,571 4 5	....	328 8 5	1,242 12 0	....	1,242 12 0	....	Ditto.
Ram Narain Harsha and others ..	157 4 9	....	35 9 3	121 11 6	....	121 11 6	....	Ditto.
De Rozario, William Percival (39 of 1929)	1,040 0 0	....	109 12 6	930 3 6	....	930 3 6	....	D.tto.
Robinson, H. J. (175 of 1929)	715 0 0	47 3 4	123 1 10	544 10 10	513 14 7	30 12 3	....	Ditto.
Ram Protap Karnani (34 of 1930) ..	150 5 11	....	56 0 8	94 5 3	....	94 5 8	....	Ditto.
Rung Lal Narsaria and Gojadhur Narsaria (47 of 1930).	50 0 0	....	43 11 0	6 5 0	....	6 5 0	....	Ditto.
Ram Krishna Mohta (133 of 1930) ..	2,258 5 4	....	234 15 7	2,023 5 9	....	2,023 5 9	....	Ditto.
Runchore Das Murarjee (Gokul Das Aurora) (Private Estate).	2,805 13 1	1,225 0 0	341 6 0	1,239 7 1	....	1,239 7 1	....	D.tto.
Rajrup Hanuman Das	2,030 3 6	....	626 6 1	1,403 13 5	....	1,403 13 5	....	Ditto.
Reynolds, John Cummins (82 of 1931)	550 0 0	....	80 13 0	469 3 0	....	469 3 0	....	Ditto.
Roberts, Robert Henry (131 of 1931) ..	125 0 0	....	53 14 6	71 1 6	....	71 1 6	....	Ditto.
Robertson, E. G. (161 of 1931) ..	78 0 0	....	45 4 7	32 11 5	....	32 11 5	....	D.tto.
Ram Lall Dikhita	75 0 0	....	35 6 9	39 9 3	....	39 9 3	....	Ditto.
Rugh Lall and others	102 4 0	....	47 5 8	54 14 4	....	54 14 4	....	Ditto.
Rogers, Margaret (220 of 1931) ..	50 0 0	....	36 12 0	13 4 0	....	13 4 0	....	Ditto.
Ram Sukh Kapur and Ram Chand Kapur (236 of 1931).	50 0 0	....	22 13 9	27 2 3	....	27 2 3	....	D.tto.
Roghu Shah (261 of 1931)	50 0 0	....	27 1 0	22 15 0	....	22 15 0	....	Ditto.
Rajendra Chundra Sarkar (32 of 1932) ..	175 0 0	....	69 7 3	105 8 9	....	105 8 9	....	Ditto.
Radha Krishna Nundy (107 of 1932) ..	7,890 12 0	....	1,099 1 5	6,791 10 7	....	6,791 10 7	....	Ditto.

Estates.	Whole amount of receipts.	Whole disbursements.		Balance.	Portion of balance applicable to dividends now payable.	Net balance.	Transfers to unclaimed dividend account under rule 175 and section 122 of the P. T. I. Act of 1909.	Probable outturn of the dependencies.
		Dividends paid.	Other payments.					
	Rs. a. p.	Rs. a. p.	Rs. a. p.	Rs. a. p.	Rs. a. p.	Rs. a. p.	Rs. a. p.	
Rameswar Awasthi (185 of 1932) ..	826 5 3	....	259 11 10	566 9 5	....	566 9 5	....	Outstanding in course of recovery.
Ram Charita Sing (25 of 1933) ..	50 0 0	....	23 1 0	26 15 0	....	26 15 0	....	Ditto.
Rozario, William (30 of 1933) ..	50 0 0	....	41 15 0	8 1 0	....	8 1 0	....	Ditto.
Ramprottap Ridcurn (214 of 1926) ..	9,150 10 0	....	6,949 10 2	2,200 15 10	....	2,200 15 10	....	Ditto.
Rodhurajsing Jain (79 of 1933) ..	75 0 0	....	....	75 0 0	....	75 0 0	....	Ditto.
Shaik Azizuddin	1,041 7 3	....	402 7 9	638 15 6	....	638 15 6	....	Nothing further recoverable.
Sarkies, S. J.	17,698 4 9	....	1,738 6 0	15,959 14 9	....	15,959 14 9	....	Ditto.
Sophianopoulos, J. G.	838 12 0	188 8 8	108 11 0	541 8 4	....	42 12 9	498 11 7	Ditto.
Sewprosad Johurmull and Khettromull	19,848 11 3	11,644 8 9	5,666 8 2	2,537 10 4	....	611 4 1	No. 2. 1,926 6 3	Ditto.
Soler, Henry Eustace	402 8 9	....	108 1 0	294 7 9	....	294 7 9	No. 2.	Ditto.
Sarat Chundra Bose	528 4 5	....	53 1 1	475 3 4	....	475 3 4	....	Ditto.
Soogun Chand Bachawat and others ..	7,548 13 9	6,410 2 6	951 2 2	97 9 1	....	97 9 1	....	Ditto.
Syed Bux	767 9 3	....	401 12 9	365 12 6	....	365 12 6	....	Ditto.
Soogun Chand Mundra and others (Jesroop Juggernath).	5,752 14 9	1,049 0 6	2,917 5 10	1,786 8 5	....	833 7 7	953 0 10	Ditto.
Surendra Nath Pal	610 0 0	....	61 11 0	548 5 0	....	548 5 0	No. 2.	Ditto.
Surajmull Surana	650 0 0	....	56 12 0	593 4 0	....	593 4 0	....	Ditto.
Shaik Mohamed Ahmed and Abdul Ghoffur	21,292 7 4	13,412 10 0	3,673 6 2	4,206 7 2	....	4,167 0 2	39 7 0	Ditto.
Syed Velayet Ali	4,650 0 4	2,305 4 10	1,577 1 7	767 9 11	....	767 9 11	No. 3. 51 13 0	Ditto.
Sailesaur & Co.	2,004 14 2	....	538 5 4	1,466 8 10	....	1,466 8 10	No. 2.	Ditto.
Saroda Prosad Dawn	2,187 3 0	1,068 2 8	367 9 7	751 6 9	....	163 9 9	587 13 0	Ditto.
Salt, W. R.	3,650 0 0	1,451 7 0	2,025 15 0	172 10 0	....	172 10 0	No. 2. 166 12 0	Ditto.
Sundur Prosad Kalwar	1,284 14 5	....	496 13 11	788 0 6	....	788 0 6	No. 3.	Ditto.
Sewnarain Mohta and others (Dhanraj Mohta).	1,276 15 6	....	829 8 3	447 7 3	....	447 7 3	....	Ditto.
Sejour Rohomon and others (S. R. Ahmed n).	6,589 2 11	3,907 3 7	945 7 7	1,736 7 9	....	1,736 7 9	....	Ditto.

Shyam Sundur Agarwalla	2,835 2 9	....	219 7 1	2,615 11 8	....	2,615 11 8	....	Ditto.
Sadhesur Dey	4,597 12 3	1,291 14 7	1,793 3 9	1,512 9 11	....	1,512 9 11	....	Ditto.
Sova Chand Paruck (8 of 1915)	2,553 14 6	....	834 1 5	1,719 13 1	....	1,719 13 1	....	Ditto.
Santosh Kumar Majumdar	460 0 0	111 2 8	105 5 0	243 8 4	....	58 13 8	184 10 8	Ditto.
							No. 2.	
Sova Chand Idan	807 10 6	....	76 4 11	731 5 7	....	731 5 7	....	Ditto.
Satis Chundra Sen (S. C. Sen & Co.)	1,564 4 6	....	126 7 1	1,437 13 5	....	1,437 13 5	....	Ditto.
Sarat Chunder Pal and Sarat Chunder Pal.	48,259 12 0	....	46,614 8 4	1,645 3 8	....	1,645 3 8	....	Ditto.
Shaik Shyam Ali (92 of 1916)	838 3 0	....	87 12 8	750 6 4	....	750 6 4	....	Ditto.
Seehase, August Frederick Carl	35,690 11 2	29,692 14 7	3,199 14 4	2,797 14 3	....	....	2,797 14 3	Ditto.
							No. 2.	
Shaik Abdul Aziz (Shaik Arfan Ally) (156 of 1916).	9,168 12 2	6,467 6 11	2,281 7 8	419 14 0	....	419 14 0	....	Ditto.
Subodh Chunder Dutt (Hop Sing & Co.) (186 of 1916).	3,130 9 3	1,502 12 5	807 11 11	820 0 11	....	85 14 0	734 2 11	Ditto.
							No. 2.	
Shaik Mahomed Kader Mirza Saheb	2,553 14 6	1,936 10 9	228 9 9	388 10 0	....	274 15 9	113 10 3	Ditto.
							No. 2.	
Surajmull Nekiram (Sri Ram Suraj Mull) (136 of 1928).	39,251 13 3	36,247 15 9	2,901 14 7	101 14 11	....	101 14 11	....	Ditto.
Sewbux Ram Chunder (138 of 1918)	24,103 13 3	15,309 1 2	4,323 7 6	4,471 4 7	1,545 9 8	638 7 1	2,287 3 10	Ditto.
							No. 2.	
Suprovat Das (159 of 1918)	927 7 6	65 0 0	222 8 3	639 15 3	....	639 15 3	....	Ditto.
Satis Chunder Roy and another (43 of 1920)	26,499 15 0	159 15 6	13,289 8 6	13,050 7 0	....	13,050 7 0	....	Ditto.
Satcouri Chatterjee (91 of 1918)	60,288 3 0	27,511 10 9	27,195 11 10	5,580 12 5	....	509 2 0	5,071 10 5	Ditto.
							No. 2.	
Shyama Das Banerjee	988 11 6	....	121 10 1	867 1 5	....	867 1 5	....	Ditto.
Saldana, A. F. (98 of 1920)	5,735 9 3	1,074 13 8	3,415 8 7	1,245 3 0	....	1,223 14 5	21 4 7	Ditto.
							No. 2.	
Seojeeram Mugniram	53,782 2 6	....	53,296 12 3	485 6 3	....	485 6 3	....	Ditto.
Shamjee Rowjee & Co. (162 of 1920)	65,117 0 3	42,226 8 7	16,436 11 9	6,453 11 11	2,524 4 5	498 9 3	3,430 14 3	Ditto.
							No. 2.	
Staynor, John Birnard (172 of 1920)	7,832 8 0	6,987 4 8	506 7 6	338 11 10	124 4 9	106 15 3	107 7 10	Ditto.
							No. 2.	
Sultan Zia	375 2 0	....	56 2 1	318 15 11	....	318 15 11	....	Ditto.
Surendra Nath Pramanick (65 of 1921)	2,838 3 0	....	186 2 3	2,652 0 9	....	2,652 0 9	....	Ditto.
Shaik Aziz Abdul Huq (94 of 1921)	2,878 10 0	1,177 1 4	1,061 12 9	639 11 11	....	344 10 11	295 1 0	Ditto.
							No. 2.	
Sailendra Krishna Roy and another (90 of 1921).	81,369 12 1	....	80,399 4 6	970 7 7	....	970 7 7	....	Ditto.
Sochindra Mohun Sha (175 of 1921)	1,790 2 0	110 0 0	444 5 11	1,235 12 1	508 0 0	727 12 1	....	Ditto.
Sarut Chunder Bhur and another (176 of 1921).	21,595 8 9	11,165 1 11	8,330 12 8	2,096 10 2	850 11 11	96 12 10	1,149 1 5	Ditto.
							No. 2.	

Estates.	Whole amount of receipts.	Whole disbursements.		Balance.	Portion of balance applicable to dividends now payable.	Net balance.	Transfers to unclaimed dividend account under rule 175 and section 122 of the P. T. I. Act of 1909.	Probable outturn of the dependencies.
		Dividends paid.	Other payments.					
	Rs. a. p.	Rs. a. p.	Rs. a. p.	Rs. a. p.	Rs. a. p.	Rs. a. p.	Rs. a. p.	
Subcorn Poddar (Ram Rutton Gajadhur) (183 of 1921).	18,790 12 3	16,814 9 3	1,261 5 11	714 13 1	....	467 10 10	247 2 3	Nothing further recoverable.
							No. 2. 489 7 11	
							No. 3.	
Syed Habibur Rohomon Chowdhury ..	6,806 1 4	3,824 13 8	427 5 9	2,553 13 11	2,452 9 0	101 4 11	....	Ditto.
Shibghatulla Barry (56 of 1922) ..	6,219 4 10	....	1,804 4 1	4,415 0 9	....	4,415 0 9	....	Ditto.
Saley Mohamed (165 of 1922)	72 3 3	....	28 5 4	43 13 11	....	43 13 11	....	Ditto.
							E. B.— 52 10 1	
Sandys, Edwin Francis	3,967 10 0	3,625 0 11	289 15 0	52 10 1	....	....	1,002 1 8	Ditto.
							No. 3.	
Shaik Mohamed Ismail Chandna (189 of 1922)	2,276 12 3	....	839 10 7	1,437 1 8	....	1,437 1 8	....	Ditto.
Sattya Charan Nath (238 of 1922) ..	1,407 10 9	....	150 3 1	1,257 7 8	....	1,257 7 8	....	Ditto.
Southwell Phillip William (117 of 1923) ..	1,650 0 0	841 8 0	126 7 4	682 0 8	309 10 10	372 5 10	....	Ditto.
Satis Chunder Ghose and Susil Kumar Audhikary (143 of 1923).	4,581 9 0	....	317 12 1	4,263 12 11	....	4,263 12 11	....	Ditto.
Sikdar & Co. (173 of 1922)	1,277 15 3 401 15 0 (Represents advance from M. D. R. Accounts.)	....	729 0 6	548 14 9	....	548 14 9	....	Ditto.
Shaik Serajuddin (Mahomed Ibrahim) (182 of 1923).	8,579 5 6	4,834 3 1	1,027 12 10	2,717 5 7	....	690 5 3	2,027 0 4	Ditto.
							No. 2.	
Sashi Bhusan Bhattacharjee (95 of 1918) ..	1,153 5 1	342 12 7	589 14 3	220 10 3	196 5 2	24 5 1	....	Ditto.
Sewnarain Hur Chand Roy (22 of 1924) ..	644 12 0	297 11 7	102 2 3	244 14 2	43 0 4	201 13 10	....	Ditto.
Surendra Nath Basant and Nagendra Nath Naik.	30,289 9 3	22,004 9 7	4,726 4 1	3,558 11 7	1,138 10 8	584 0 8	1,836 0 3	Ditto.
							No. 2.	
Sasti Kinkar Banerjee (195 of 1924) ..	1,799 10 7	....	289 0 8	1,510 9 11	....	1,510 9 11	....	Ditto.
Suttendro Chunder Sur	335 4 0	....	61 6 5	273 13 7	191 10 9	82 2 10	....	Ditto.
Sew Lall Takutmull (210 of 1924) ..	14,550 0 0	....	14,201 2 0	348 14 0	....	348 14 0	....	Ditto.
Sachhidanundo Bagchi (211 of 1924) ..	11,422 12 0	....	999 7 11	10,423 4 1	....	10,423 4 1	....	Ditto.
Satis Chunder Banerjee (231 of 1924) ..	1,781 4 0	....	931 8 1	849 11 11	....	849 11 11	....	Ditto.
Sewnarain	566 14 0	....	124 0 5	442 13 7	....	442 13 7	....	Ditto.
Sewnundrai Kedarnath	16,483 12 7	13,288 8 0	2,399 12 1	795 8 6	....	252 9 1	542 15 5	Ditto.
							No. 2.	
Sumermull Parekh and Panna Lall Parekh (38 of 1925).	600 0 0	328 14 7	186 14 10	84 2 7	....	84 2 7	....	Ditto.

Srish Chunder Dawn (110 of 1925) ..	256 0 0	....	88 2 4	167 13 8	....	167 13 8	....		Ditto.
Subanda Chundra Sen ..	610 0 0	31 14 6	99 15 0	478 2 6	192 8 0	285 10 6	....		Ditto.
Sugun Chand Ram Chunder	961 8 9	....	176 3 5	785 5 4	....	785 5 4	....		Ditto.
Sundermull (139 of 1925)	2,199 4 0	924 12 6	245 14 9	1,028 8 9	547 13 7	480 11 2	....		Ditto.
Sudhi Ranjan Ray (65 of 1925) ..	520 4 0	....	97 3 10	423 0 2	369 5 9	....	E. B.— 53 10 5		Ditto.
Shibo Kally Manna	47 8 0	....	34 8 0	13 0 0	....	13 0 0	....		Ditto.
Sahai Chunder Mitter (256 of 1925) ..	1,616 0 0	....	1,407 2 0	208 14 0	....	208 14 0	....		Ditto.
Shaik Solomon (291 of 1925)	102 0 0	....	56 0 1	45 15 11	....	45 15 11	....		Ditto.
Srilal Hanumanbuksh (59 of 1926) ..	372 12 0	....	75 5 9	297 6 3	....	297 6 3	....		Ditto.
Shamji Gokul Das (229 of 1926) ..	3,678 0 0	2,544 4 10	999 13 1	133 14 1	....	133 14 1	....		Ditto.
Sew Lall Sankari Lall	550 0 0	102 15 5	....	447 0 7	....	447 0 7	....		Ditto.
Santram Vadera (Mehta & Co.) ..	5,247 3 9	3,792 2 4	1,056 15 8	398 1 9	....	340 14 8	57 3 1		Ditto.
							No. 2.		
Satis Chunder Saha (48 of 1927) ..	4,521 13 0	3,818 13 10	406 8 1	296 7 1	....	296 7 1	....		Ditto.
Sarkar and Sarkar (47 of 1927) ..	2,977 8 9	224 5 0	844 4 3	1,908 15 6	89 10 6	1,819 5 0	....		Ditto.
Sakoilsky, Madame Marie (107 of 1927) ..	1,344 0 6	82 5 7	390 11 3	870 15 8	....	314 5 4	556 10 4		Ditto.
							No. 2.		
Sisir Kumar Bhaduri (150 of 1927) ..	50 0 0	....	2 8 0	47 8 0	....	47 8 0	....		Ditto.
Sital Chunder Tat and Girija Bhusan Pal ..	80 0 0	....	74 11 0	5 5 0	....	5 5 0	....		Ditto.
Sisir Kumar Mitter (163 of 1927) ..	459 2 0	....	207 11 2	251 6 10	....	251 6 10	....		Ditto.
Sova Chand and others (Sova Chand Khub Chand) (196 of 1927).	2,866 8 7	293 5 4	1,598 7 0	974 12 3	....	947 12 3	....		Ditto.
Sudhir Kumar Bose (4 of 1928) ..	230 0 0	....	72 6 0	157 10 0	....	157 10 0	....		Ditto.
Sarat Chunder Pal (224 of 1927) ..	8,168 6 9	6,645 0 10	891 4 10	632 1 1	383 2 10	248 14 3	....		Ditto.
Sweeney Hugh Edward Aloysius (226 of 1929).	724 12 0	463 2 1	122 13 1	138 12 10	....	138 12 10	....		Ditto.
Surendra Nath Mitter (22 of 1928) ..	1,647 11 0	1,173 2 2	143 12 8	330 12 2	288 1 0	42 11 2	....		Ditto.
Simpson, Harry James (35 of 1928) ..	614 8 5	....	305 0 2	309 8 3	....	309 8 3	....		Ditto.
Satis Chunder Dey (56 of 1928) ..	275 10 0	....	62 11 6	212 14 6	....	212 14 6	....		Ditto.
Sewnarain Agarwalla (118 of 1928) ..	418 2 0	261 15 3	40 1 8	116 1 1	....	116 1 1	....		Ditto.
Syed Jewan Hossain (222 of 1928) ..	249 0 0	....	65 11 2	183 4 10	....	183 4 10	....		Ditto.
Sew Protap Rathi	131 7 1	....	89 5 4	42 1 9	....	42 1 9	....		Ditto.
Srinath Bazaz and Mohadeoprosad Poddar (236 of 1928).	3,130 3 10	32 0 0	1,065 14 7	2,032 5 3	519 0 6	1,513 4 9	....		Ditto.
Sampson, William James (73 of 1929) ..	133 8 6	....	81 2 9	52 5 9	....	52 5 9	....		Ditto.
Satya Charan Dhur known as S. C. Dhur (90 of 1929).	460 0 0	93 6 5	261 1 0	105 8 7	51 12 6	53 12 1	....		Ditto.
Sukumar Pakrasi (95 of 1929)	191 15 3	....	112 1 6	79 13 9	....	79 13 9	....		Ditto.
Simpson, Catharine, Mrs. (120 of 1929) ..	190 0 0	48 0 3	94 4 0	47 11 9	....	47 11 9	....		Ditto.
Sailendra Nath Mitter (135 of 1929) ..	155 3 0	....	78 11 11	76 7 1	....	76 7 1	....		Ditto.
Sohun Lall Surajratan	50 0 0	....	....	50 0 0	....	50 0 0	....		Ditto.
Sohun Lall Surujratan Singhee (163 of 1929)	94 10 0	16 3 2	38 2 3	40 4 7	33 14 5	6 6 2	....		Ditto.
Sagoremull Babua Joy Doyal Babua *alias* Agarwalla.	50 0 0	....	23 7 0	26 9 0	....	26 9 0	....		Ditto.
Susilabala Dasi, Sm (193 of 1929) ..	121 0 0	....	81 5 4	39 10 8	....	39 10 8	....		Ditto.
Sadhu Charan Mullick (219 of 1929) ..	6,744 7 9	5,415 4 2	951 8 9	377 10 10	20 1 10	357 9 0	....		Ditto.
Seth, Rowland Bertram (53 of 1936) ..	4,918 14 1	2,683 0 1	397 5 0	1,838 9 0	1,589 3 3	249 5 9	....		Ditto.
Surendra Nath Pal (64 of 1930) ..	142 8 0	....	101 8 9	40 15 3	....	40 15 3	....		Ditto.
Sushen Kumar Mukerjee (90 of 1930) ..	614 10 0	19 0 9	244 13 8	350 11 7	292 0 0	58 11 7	....		Ditto.
Skinner, Francis William Booth (108 of 1930)	300 8 0	114 15 4	104 11 8	80 13 0	52 14 0	27 15 0	....		Ditto.
Sunnermull Surana and another ..	9,293 14 8	....	9,254 14 5	39 0 3	....	39 0 3	....		Ditto.

Estates.	Whole amount of receipts.	Whole disbursements.		Balance.	Portion of balance applicable to dividends now payable.	Net balance.	Transfers to unclaimed dividend account under rule 175 and section 122 of the P. T. I. Act of 1909.	Probable outturn of the dependencies.
		Dividends paid.	Other payments.					
	Rs. a. p.	Rs. a. p.	Rs. a. p.	Rs. a. p.	Rs. a. p.	Rs. a. p.	Rs. a. p.	
Sree Chand Banthia (171 of 1930) ..	1,018 2 0	....	461 13 3	556 4 9	....	556 4 9	....	Nothing further recoverable.
Sewratan Rathi and Ganga Bissen Rathi (196 of 1930).	1,877 13 9	....	320 10 0	1,557 3 9	....	1,557 13 9	....	Ditto.
Shaik Mahomed Eshaq Ali and Shaik Abdul Basir (206 of 1930).	300 0 0	....	79 3 1	220 12 11	....	220 12 11	....	Ditto.
Surendra Nath Pal	62 13 0	....	47 3 3	15 9 9	....	15 9 9	....	Ditto.
Sailendra Lall Sarkar (35 of 1931) ..	1,660 1 0	....	387 1 8	1,272 15 4	....	1,272 15 4	....	Ditto.
Swami Doyal (57 of 1931)	101 8 0	....	41 1 2	60 6 10	....	60 6 10	....	Ditto.
Surja Prosad and Sewnath Sing (61 of 1931)	118 5 9	....	37 8 0	80 13 9	....	80 13 9	....	Ditto.
Sailendra Nath Sen (71 of 1931) ..	122 4 3	....	60 15 9	61 4 6	....	61 4 6	....	Ditto.
Senbolle, Lion Victor (116 of 1931) ..	336 1 3	....	68 7 3	267 10 0	....	267 10 0	....	Ditto.
Samiruddin Ahmed (130 of 1931) ..	170 0 0	....	56 10 0	113 6 0	....	113 6 0	....	Ditto.
Subramania Rama Ayer (129 of 1931) ..	1,255 0 0	....	260 9 2	994 6 10	....	994 6 10	....	Ditto.
Schwegler, Robert Alfred (135 of 1931) ..	2,298 8 9	373 5 0	879 1 1	1,046 2 8	144 1 0	902 1 8	....	Ditto.
Simpson, Leonard Charles (17 of 1932) ..	363 3 6	....	89 9 1	273 10 5	....	273 5 10	....	Outstanding in course of recovery.
Swaries, Arthur Macdonald	175 0 0	139 7 4	31 13 6	3 11 2	....	....	E. B.— 3 11 2 39 15 4	Ditto.
							No. 3.	
Satish Chunder Chatterjee	200 0 0	....	107 10 0	92 6 0	....	92 6 0	....	Ditto.
Sarat Chundra Sanyal	16,419 10 0	14,394 4 6	1,799 2 5	226 3 1	197 4 8	28 14 5	....	Ditto.
Sorabjee, D. P., Mrs. (28 of 1932) ..	113 3 7	....	114 0 9	Dr. Balance— 0 13 2	....	....	....	Ditto.
Shave, Desmond Daniel (49 of 1932) ..	2,315 0 0	1,304 5 3	353 4 9	657 6 0	214 1 4	443 4 8	....	Ditto.
Sukh Lall (80 of 1932)	392 0 0	....	113 12 0	278 4 0	....	278 4 0	....	Ditto.
Surendra Nath Dey (87 of 1932) ..	286 14 3	....	127 6 0	159 8 3	....	159 8 3	....	Ditto.
Shrubsole, Clande Idwal Bedolfe (91 of 1932)	230 0 0	....	49 4 6	180 11 6	....	180 11 6	....	Ditto.
Surajmull Ram Protap Mohadeo Mull and Sagarmull (113 of 1932).	50 0 0	....	40 15 6	9 0 6	....	9 0 6	....	Ditto.
Shamsuddin Khoja Worrah (127 of 1932) ..	69 0 0	....	67 15 9	1 0 3	....	1 0 3	....	Ditto.
Scott, George Gill (109 of 1932) ..	50 0 0	....	41 11 9	8 4 3	....	8 4 3	....	Ditto.
S. G. Hossein (176 of 1932)	3,514 7 7	....	2,241 6 11	1,273 0 8	....	1,273 0 8	....	Ditto.
Sawal Das Mangal Chand (183 of 1932) ..	236 12 0	....	53 11 0	183 1 0	....	183 1 0	....	Ditto.
Sassoon Joseph Solomon (203 of 1932) ..	93 0 8	....	82 15 10	10 0 10	....	10 0 10	....	Ditto.
Sewnarain (207 of 1932)	1,695 10 3	....	574 0 7	1,121 9 8	....	1,121 9 8	....	Ditto.
Sisir Kumar Bhadury	50 0 0	....	....	50 0 0	....	50 0 0	....	Ditto.
St. Romain Andrew Lewis (61 of 1933) ..	110 10 6	....	45 14 9	64 11 9	....	64 11 9	....	Ditto.
Shaik Noor Ellahi Noor Ahmed ..	500 0 0	....	156 13 2	343 2 10	....	343 2 10	....	Ditto.
Sitaram Jamuna Shaw and Harduarimull ..	50 0 0	....	25 2 9	24 13 3	....	24 13 3	....	Ditto.
Satya Jibon Bose (113 of 1933) ..	75 0 0	....	....	75 0 0	....	75 0 0	....	Ditto.
Shaik Newaz Wariswali (114 of 1933) ..	50 0 0	....	20 12 0	29 4 0	....	29 4 0	....	Ditto.

Stevens, Marij Fair Child (128 of 1933) ..	50 0 0	....	....	50 0 0	....	50 0 0	....	Ditto.
Sailendra Nath Dauri (137 of 1933) ..	50 0 0	....	....	50 0 0	....	50 0 0	....	Ditto.
Tulsi Ram Jalan	9,697 8 3	6,432 12 7	914 15 6	2,349 12 2	....	2,349 12 2	2,635 14 11	Nothing further recoverable.
							No. 3.	
Tarruck Bundhoo Bhattacharjee ..	8,811 13 6	3,111 5 2	4,602 7 7	1,098 0 9	....	1,053 13 3	E. B.— 44 3 6 828 4 3	Ditto.
							No. 3.	
Taruck Das Dhur (100 of 1912) ..	9,423 4 6	3,206 1 11	4,104 8 2	2,112 10 5	....	1,031 4 5	1,081 6 0	Ditto.
							No. 2.	
Tappissier Eugene, H. A.	474 10 6	....	95 8 8	379 1 10	....	379 1 10	....	Ditto.
Teasdale, T. W.	1,100 0 0	509 13 3	85 14 0	504 4 9	....	82 9 5	421 11 4	Ditto.
							No. 2.	
Trijogey Nath Dobey	5,218 9 6	1,275 3 4	1,954 14 4	1,988 7 10	....	223 15 5	1,764 8 5	Ditto.
							No. 2.	
Turner, N. A.	1,617 9 0	1,280 8 8	211 0 0	126 0 4	....	126 0 4	60 6 5	Ditto.
							No. 3.	
Taherbhoy Molla Tayab Ali	221 6 3	....	61 8 10	159 13 5	....	159 13 5	....	Ditto.
Thomas Hugh	250 0 0	....	49 15 6	200 0 6	....	200 0 6	....	Ditto.
Taresh Chunder Ghose	2,021 2 9	962 3 9	868 11 1	190 3 11	....	190 3 11	....	Ditto.
Tara Prosonno Pramanick	5,535 12 0	556 12 5	627 2 10	4,351 12 9	84 3 7	4,267 9 2	....	Ditto.
Tristram James Samuel (Montieth & Co.) (205 of 1923).	17,735 11 3	12,065 7 0	4,508 15 2	1,161 5 1	75 0 0	916 11 4	169 9 9	Ditto.
							No. 2.	
Tinsley, W. H. (147 of 1925)	950 0 0	580 3 1	122 0 0	247 12 11	....	44 12 3	203 0 8	Ditto.
							No. 2.	
Tobias William Samuel (11 of 1929) ..	140 4 0	....	56 3 1	84 0 11	....	84 0 11	....	Ditto.
Tancered, M. F. (174 of 1929)	55 0 0	....	51 13 0	3 3 0	....	3 3 0	....	Ditto.
Tulsi Das Kissen Doyal (10 of 1930) ..	32,639 12 3	....	6,191 11 0	26,448 1 3	....	26,448 1 3	....	Ditto.
Tellore Roghoba Kachapeswar Aiyar (41 of 1931).	1,350 1 0	899 4 7	131 15 0	318 13 5	70 13 5	248 0 0	....	Ditto.
Tulsi Churn Kumar *alias* T. C. Kumar (99 of 1932).	273 0 0	....	92 1 5	180 14 7	....	180 14 7	....	Ditto.
Thakur Das Agyaram	4,797 3 9	....	1,768 14 5	3,028 5 4	....	3,028 5 4	....	Ditto.
Thurstan Edith Janey Lloyd (89 of 1926) ..	6,575 5 1	6,055 12 10	442 0 0	77 8 3	....	....	E. B.— 12 14 6 64 9 9	Ditto.
							No. 2.	
Taylor James Niven	50 0 0	....	40 2 0	9 14 0	....	9 14 0	....	Ditto.
Upendra Nath Dutt (135 of 1916) ..	3,845 15 3	2,632 15 10	219 15 1	993 0 4	....	42 0 0	951 0 4	Ditto.
							No. 2.	
Upson Donald Goldie (74 of 1918) ..	935 0 0	685 0 10	115 10 5	134 4 9	....	71 0 1	63 4 8	Ditto.
							No. 2.	

Estates.	Whole amount of receipts.	Whole disbursements.		Balance.	Portion of balance applicable to dividends now payable.	Net balance.	Transfers to unclaimed dividend account under rule 175 and section 122 of the P. T. I. Act of 1909.	Probable outturn of the dependencies.
		Dividends paid.	Other payments.					
	Rs. a. p.	Rs. a. p.	Rs. a. p.	Rs. a. p.	Rs. a. p.	Rs. a. p.	Rs. a. p.	
Udon Narain Ram Brohmo (Iswar) and Sri Bejoy Hari Roy	14,016 7 0	....	9,336 4 7	4,680 2 5	....	4,680 2 5	....	Nothing further recoverable.
Upendra Nath Bandyopadhyaya ..	1,378 7 6	....	1,294 10 6	83 13 0	....	83 13 0	....	Ditto.
Upendra Nath Nundy (116 of 1923) ..	792 14 6	401 7 0	173 10 5	217 13 1	71 7 8	146 5 5	....	Ditto.
Uttam Chand Ashudamull (183 of 1926) ..	8,226 11 9	6,487 1 4	922 8 6	817 1 11	544 6 8	226 12 9	45 14 6	Ditto.
							No. 2.	
Unger Valentine Carl Whybrow (134 of 1931)	1,290 0 0	7 8 0	134 13 3	1,147 10 9	1,004 12 4	142 14 5	....	Ditto.
Upendra Nath Koer and Bros. (225 of 1930)	75 0 0	....	51 12 8	23 3 4	....	23 3 4	....	Ditto.
Uttam Chand Asudamull (182 of 1931) ..	874 13 0	....	290 1 3	584 11 9	....	584 11 9	....	Ditto.
Unger Andrew Henry (237 of 1931) ..	52 6 0	....	52 5 9	0 0 3	....	0 0 3	....	Ditto.
Upendra Nath Kar (249 of 1931) ..	30,837 3 7	....	5,126 3 4	25,711 0 3	....	25,711 0 3	....	Ditto.
Upendra Nath Sen (131 of 1932) ..	2,912 15 0	....	801 9 6	2,111 5 6	....	2,111 5 6	....	Ditto.
Vonek, A. M. L.	50 0 0	....	9 9 6	40 6 6	....	40 6 6	..	Ditto.
Velji Jetha	633 8 11	....	63 14 2	569 10 9	....	569 10 9	....	Ditto.
Vanspall Maurice George Christian (88 of of 1926).	2,538 0 0	1,568 1 7	323 2 4	641 12 1	....	120 7 8	521 4 5	Ditto.
							No. 2.	
Vincent Clive Lawrentine (202 of 1927) ..	1,531 3 0	1,092 0 1	165 10 7	273 8 4	161 8 5	111 15 11	....	Ditto.
Worman and Co.	3,51,895 4 4	2,00,421 1 1	1,49,407 12 8	2,066 6 7	....	678 3 0	1,388 3 7	Ditto.
							No. 2.	
Wilkinson, H. R.	15,761 15 9	10,109 10 1	2,028 2 0	3,624 3 8	....	1,715 7 8	1,908 12 0	Ditto.
							No. 2.	
Woomesh Chandra Chowdhury ..	300 0 0	189 0 4	92 10 0	18 5 8	....	....	E. B.—	Ditto.
							18 5 8	
							55 12 1	
							No. 3.	
Wood, Henry	660 0 0	176 4 0	66 13 6	416 14 6	....	....	E. B.—	Ditto.
							18 7 1	
							398 7 5	
							No. 2.	
Wittenbaker, T. A. W. (73 of 1919) ..	850 0 0	550 5 5	127 14 0	171 12 7	....	70 14 3	100 14 4	Ditto.
							No. 2.	
Waymark, A. E.	2,614 5 0	1,752 1 3	273 14 8	588 5 1	489 12 8	19 13 5	78 11 0	Ditto.
							No. 2.	

| | | |

In the High Court of Judicature at Fort William in Bengal, in Insolvency.

NOTICE OF ADJUDICATION ORDER.

No. 80 OF 1936.

Re Jangi Ram Suri, carrying on business as sole proprietor of Suri & Co., at No. 54, Canning Street, in the town of Calcutta. Ex parte the creditor.

Sudhir Ch. Ray Chaudhuri, creditor's solicitor.

ON the 14th day of July 1936 an order was made by the High Court of Judicature at Fort William in Bengal in its insolvency jurisdiction adjudging the abovenamed as an insolvent.

Note.—All debts due to the estate should be paid to me.

Dated this 1st day of August 1936.

G. M. FALKNER, Official Assignee.

In the High Court of Judicature at Fort William in Bengal, in Insolvency.

NOTICE OF ADJUDICATION ORDER.

No. 101 OF 1936.

Re Nani Lal Khetri, ordinarily residing at No. 24, Sikdarpara Street, in the town of Calcutta, and working for gain as a building supervisor in Calcutta aforesaid, ex parte the debtor.

R. L. Dutt & Co., debtor's solicitors.

ON the 30th day of July 1936 an order was made by the High Court of Judicature at Fort William in Bengal in its insolvency jurisdiction adjudging the abovenamed as an insolvent.

Note.—All debts due to the estate should be paid to me.

Dated this 3rd day of August 1936.

G. M. FALKNER, Official Assignee.

In the High Court of Judicature at Fort William in Bengal, in Insolvency.

NOTICE OF ADJUDICATION ORDER.

No. 102 OF 1936.

Re Nirmal Kumar Banerjea, residing at No. 77/1, Sambhu Nath Pandit Street, and lately residing at No. 208, Russa Road, South, in Calcutta, and working for gain as an employee of Messrs. T. N. Banerjea, Ltd., at No. 6, Hastings Street, in the town of Calcutta, ex parte the debtor.

Leslie and Hinds, debtor's solicitors.

ON the 30th day of July 1936 an order was made by the High Court of Judicature at Fort William in Bengal, in its insolvency jurisdiction adjudging the abovenamed as an insolvent.

Note.—All debts due to the estate should be paid to me.

Dated this 4th day of August 1936.

G. M. FALKNER, Official Assignee.

In the High Court of Judicature at Fort William in Bengal, in Insolvency.

NOTICE OF ADJUDICATION ORDER.

No. 103 of 1936.

Re Edwin Lancefield Staples, residing at No. 5, Hossain Road, Alipore, in the suburbs of Calcutta, lately carrying on business under the name and style of Staples and Company at Stephen House, Dalhousie Square, in the town of Calcutta, and also under the name and style of Kruschandle and Co., Bharat Building, Calcutta, at present of no occupation, ex parte the debtor.

P. K. Mitra, debtor's solicitor.

ON the 1st day of August 1936, an order was made by the High Court of Judicature at Fort William in Bengal in its insolvency jurisdiction adjudging the abovenamed as an insolvent.

Note.—All debts due to the estate should be paid to me.

Dated this 6th day of August 1936.

G. M. FALKNER, Official Assignee.

In the High Court of Judicature at Fort William in Bengal, in Insolvency.

NOTICE is hereby given to the undermentioned insolvents that owing to their not having applied for their discharge within eighteen months of the order of adjudication made against them, the Registrar-in-insolvency, High Court, Calcutta, has fixed Wednesday, the 2nd day of September 1936 at 11 o'clock in the forenoon, for the hearing by him of the Official Assignee's application under section 41 of the Presidency Towns Insolvency Act, III of 1909, and rule 142A made thereunder for orders of annulment of the respective adjudication orders. Insolvents desirous of having the hearing postponed must apply to the Registrar-in-insolvency and not to the undersigned:—

Adjudication Order.		Insolvents.
Nos.	Dates.	
209	19-8-1914	Abdul Cader Moola Essabhoy.
49	16-4-1917	Madan Lall Deora.
52	29-4-1919	Anantram.
129	1-12-1919	Farm of Dhanraj Ganpatrai.
148	30-10-1934	Banwarilal Sha.
152	19-11-1934	Basdeo Patodia.
153	19-11-1934	Thomas William Radley.
154	26-11-1934	Charles Ezekiel Solomon.
156	6-12-1934	Amulya Charan Mondal and Upendra Nath Mondal.
159	13-12-1934	Chunna Lal Sadh.
160	15-12-1934	Prayagdas Vyas.
162	17-12-1934	(Mrs.) Josephine Helen Rae.

G. M. FALKNER, Official Assignee.

Calcutta, the 4th day of August 1936. (1638—1)

In the Court of the District Judge of Bakarganj.

INSOLVENCY CASE No. 10 OF 1936.

NOTICE is hereby given that one Akhoy Kumar Chattopadhaya, son of late Kumud Bandhu Chattopadhaya, at present of Barisal, police-station Kotwali, district Bakarganj, has applied to be adjudicated an insolvent and that the 28th August 1936 has been fixed for hearing the petition and for examination of the petitioner.

A. N. SEN, District Judge.

Barisal, the 4th August 1936. (1649—1)

In the Court of the District Judge of Bankura.

INSOLVENCY CASE No. 8 OF 1935.

Abhayapada Chatterjee, son of late Natabar Chatterjee, of Tajpur, police-station Kotulpur, district Bankura, petitioner.

NOTICE is hereby given that the abovenamed petitioner was adjudged insolvent by order of this Court, dated the 25th day of July 1936, and he has been directed to apply for his final discharge within six months.

S. K. GANGULI, District Judge.

Bankura, the 6th August 1936. (1660—1)

In the Court of the District Judge of Faridpur.

INSOLVENCY CASE No. 73 OF 1936.

(1) Rash Mohan Saha, son of Gopal Chandra Saha, (2) Upendra Nath Saha, minor son of Dwarika Nath Saha, represented by guardian uncle Gopal Chandra Saha, of Hiran, police-station Kotalipara, district Faridpur, creditor-petitioners

versus

(1) Hari Mohan Saha, son of late Kailash Chandra Saha, (2) Makhan Lal Saha, son of late Prasanna Kumar Saha, of Jamila, police-station Kotalipara, district Faridpur, debtors-opposite party.

NOTICE is hereby given that the abovenamed creditor-petitioners have applied to this Court to have the debtors, opposite party, adjudged insolvents and that the 28th August 1936 has been fixed for the hearing of the application.

K. B. ROY, District Judge.

Faridpur, the 3rd August 1936. (1637—1)

In the Court of the Addl. District Judge of Hooghly at Howrah.

INSOLVENCY PETITION No. 29 OF 1936.

NOTICE is hereby given that Pankaj Kumar Goswami, son of late Mahendra Lal Goswami, of Bally, Goswamipara, thana Bally, district Hooghly, was on the 19th June 1936 adjudged an insolvent and directed to apply for discharge within six months.

S. N. GUHA RAY, Addl. District Judge.

Howrah, the 4th August 1936. (1633—1)

In the Court of the Addl. District Judge of Hooghly at Howrah.

NOTICE is hereby given under the Provincial Insolvency Act, V of 1920, to his creditors that the insolvency petition of H. Wiltshire, son of late C. Wiltshire, of E. I. Railway, Howrah, district Howrah, has been admitted by this Court as No. 103 of 1936, and that the 14th August 1936 has been fixed for the hearing thereof.

S. N. GUHA RAY, Addl. District Judge.

Howrah, the 4th August 1936. (1636—1)

ORDER OF ADJUDICATION.

Section 27 of the Provincial Insolvency Act, V of 1920.

In the Court of the District Judge at Midnapore.

INSOLVENCY APPLICATION No. 49 OF 1936.

PURSUANT to a petition, dated 16th May 1936, against T. H. Callanun, clerk, C. M. E.'s office, B.-N. Railway, Khargpur, district Midnapore, debtor, and on the application of (1) Md. Mumtaz, (2) Aziz Ahmmad, (3) Zohura Bibi, (4) Ayasha Bibi, (5) Md. Ismail of Kharida, police-station Khargpur, district Midnapore, creditors, and on reading their application and hearing their pleader, it is ordered that the debtor be and the said debtor is hereby adjudged insolvent.

It is further ordered that the debtor do apply for his discharge after one year from this date and that 20th August 1936 has been fixed for proof of debt.

Dated this 18th day of July 1936.

S. K. HALDAR, District Judge.

(1634—1)

In the Court of the District Judge of Rangpur.

INSOLVENCY CASE No. 7 OF 1936.

DAFERUDDIN SHEKH, son of late Dokori Shekh, of Raghabendrapur, police-station Mithapukur, in the district of Rangpur, was on the 5th August 1936 adjudged an insolvent by this Court. He should apply for final discharge within six months.

P. C. DE, District Judge.

Rangpur, the 6th August 1936. (1650—1)

ORDER OF ADJUDICATION.

Section 27 of the Provincial Insolvency Act, V of 1920.

In the Court of the District Judge at Alipore.

INSOLVENCY APPLICATION No. 10 OF 1936.

PURSUANT to a petition, dated the 24th March 1936, filed by Lalchand Barman of Baruipore, police-station Baruipore, 24-Parganas, debtor and on the application of the debtor himself and on reading his application and hearing his pleader, it is ordered that the debtor be and the said debtor is hereby adjudged insolvent.

It is further ordered that the debtor do apply for his discharge on 20th September 1937.

Dated this 20th day of July 1936.

T. H. ELLIS, District Judge.

(1645—1)

ORDER OF ADJUDICATION.

Section 27 of the Provincial Insolvency Act, V of 1920.

In the Court of the District Judge at Alipore.

INSOLVENCY APPLICATION No. 15 OF 1936.

PURSUANT to a petition, dated 7th May 1936, filed by Mrs. Lillah Hall of 6, Suburban Hospital Road, police-station Bhawanipore, 24-Parganas, debtor, and on the application of the debtor herself and on reading her application and hearing her pleader, it is ordered that the debtor be and the said debtor is hereby adjudged insolvent.

It is further ordered that the debtor do apply for her discharge on 26th July 1937.

Dated this 27th day of July 1936.

T. H. ELLIS, District Judge.

(1646—1)

In the 4th Court of the Sub-Judge of 24-Parganas.

INSOLVENCY CASE No. 315 OF 1936.

Notan Das M. Dhanrajani of 31, Russa Road, South Tollygunge, 24-Parganas, applicant.

To Aluminium Manufacturing Co., Ltd., 9, Clive Street, Calcutta, and others, creditors.

On the 18th day of July 1936, it was ordered that the matter of the petition of the applicant be heard on the 31st day of August 1936, and that the said applicant do attend to be examined by this Court on that date.

S. P. BOSE, Sub-Judge.

Alipore, the 23rd July 1936. (1611—1)

In the 4th Court of the Sub-Judge of 24-Parganas.

INSOLVENCY CASE No. 316 of 1936.

Jitendranath Chatterjee of 2/12, Ultadanga Main Road, police-station Manicktala, 24-Parganas, applicant.

To Bhupendra Krishna Ghosh of 46, Pathuriaghatta Street, Calcutta, creditor.

On the 22nd day of July 1936 it was ordered that the matter of the petition of the applicant be heard on the 31st day of August 1936, and that the said applicant do attend to be examined by this Court on that date.

S. P. BOSE, Sub-Judge.

Alipore, the 24th July 1936. (1612—1)

In the 4th Court of the Sub-Judge of 24-Parganas.

INSOLVENCY CASE No. 317 OF 1936.

Sk. Md. Kazem of Ashutosh Mukherjee Road, Bhowanipore, 24-Parganas, applicant.

To Seonath Prosad Agarwalla of 80, South Road, Entally, Calcutta, and others, creditors.

On the 23rd day of July 1936 it was ordered that the matter of the petition of the applicant be heard on the 7th day of September 1936, and that the said applicant do attend to be examined by this Court on that date.

S. P. BOSE, Sub-Judge.

Alipore, the 31st July 1936. (1613—1)

In the 4th Court of the Sub-Judge of 24-Parganas.

INSOLVENCY CASE No. 319 OF 1936.

Asraf Hossain of Saibati, Bhangore, 24-Parganas, applicant.

To Haricharan Ghosh of Bansbera, Hooghly, and another, creditors.

On the 23rd day of July 1936, it was ordered that the matter of the petition of the applicant be heard on the 7th day of September 1936, and that the said applicant do attend to be examined by this Court on that date.

S. P. BOSE, Sub-Judge.

Alipore, the 24th July 1936. (1614—1)

In the 4th Court of the Sub-Judge of 24-Parganas.

INSOLVENCY CASE No. 320 OF 1936.

Anwar Ali of 2/1, Tiljala Road, police-station Beniapukur, 24-Parganas, applicant.

To Kumar Gokul Chandra Laha of 111, Bowbazar Street, Calcutta, and others, creditors.

On the 25th day of July 1936 it was ordered that the matter of the petition of the applicant be heard on the 7th day of September 1936, and that the said applicant do attend to be examined by this Court on that date.

S. P. BOSE, Sub-Judge.

Alipore, the 28th July 1936. (1615—1)

In the 4th Court of the Sub-Judge of 24-Parganas.

INSOLVENCY CASE No. 321 OF 1936.

S. K. Gajjan of 318, Narikeldanga Main Road, police-station Beliaghata, 24-Parganas, applicant.

To Ganesh Das Ranu Gopal of 53/2, Canal East Road, police-station Beliaghata, 24-Parganas, and others, creditors.

On the 27th day of July 1936 it was ordered that the matter of the petition of the applicant be heard on the 7th day of September 1936, and that the said applicant do attend to be examined by this Court on that date.

S. P. BOSE, Sub-Judge.

Alipore, the 29th July 1936. (1616—1)

In the 4th Court of the Sub-Judge of 24-Parganas.

INSOLVENCY CASE No. 322 OF 1936.

S. K. Shome of 54/4/C, Hazra Road, police-station Ballygunj, 24-Parganas, applicant.

To Joytirmoy Ghosh of P 140, Rash Behary Avenue, police-station Ballygunj, 24-Parganas, and others, creditors.

On the 27th day of July 1936 it was ordered that the matter of the petition of the applicant be heard on the 7th day of September 1936, and that the said applicant do attend to be examined by this Court on that date.

S. P. BOSE, Sub-Judge.

Alipore, the 29th July 1936. (1617—1)

In the 4th Court of the Sub-Judge of 24-Parganas.

INSOLVENCY CASE No. 323 OF 1936.

Priyanath Sarkar of Mollarchack, police-station Magrahat, 24-Parganas, applicant.

To Lakshmi Kanta Sen, c/o Ralli Brothers, Ltd., of 16, Hare Street, Calcutta, and others, creditors.

On the 27th day of July 1936 it was ordered that the matter of the petition of the applicant be heard on the 7th day of September 1936, and that the said applicant do attend to be examined by this Court on that date.

S. P. BOSE, Sub-Judge.

Alipore, the 29th July 1936. (1618—1)

In the 4th Court of the Sub-Judge of 24-Parganas.

INSOLVENCY CASE No. 326 OF 1936.

Rajjab Ali of 19A, Cantopher Lane, police-station Beniapukur, 24-Parganas, applicant.

To Iswar Lal Dayabhai of 187, Harrison Road, Calcutta, and others, creditors.

On the 29th day of July 1936 it was ordered that the matter of the petition of the applicant be heard on the 7th day of September 1936, and that the said applicant do attend to be examined by this Court on that date.

S. P. BOSE, Sub-Judge.

Alipore, the 31st July 1936. (1619—1)

In the 4th Court of the Sub-Judge of 24-Parganas.

INSOLVENCY CASE No. 327 OF 1936.

Abdul Wahab of 144, Garden Reach Road, police-station Watgunge, Kidderpore, 24-Parganas, applicant.

To Musammat Halima Bibi of Mahalla Imadpur, Patna, and others, creditors.

On the 29th day of July 1936 it was ordered that the matter of the petition of the applicant be heard on the 7th day of September 1936, and that the said applicant do attend to be examined by this Court on that date.

S. P. BOSE, Sub-Judge.

Alipore, the 31st July 1936. (1620—1)

In the 4th Court of the Sub-Judge of 24-Parganas.

INSOLVENCY CASE No. 329 OF 1936.

Sudhannya Mandal of Joychandipur, thana Budge-Budge, 24-Parganas, applicant.

To Nangi Co-operative Bank, Budge-Budge, 24-Parganas, and others, creditors.

On the 30th day of July 1936 it was ordered that the matter of the petition of the applicant be heard on the 14th day of September 1936, and that the said applicant do attend to be examined by this Court on that date.

S. P. BOSE, Sub-Judge.

Alipore, the 31st July 1936. (1621—1)

In the 4th Court of the Sub-Judge of 24-Parganas.

INSOLVENCY CASE No. 331 OF 1936.

Matilal Mishra of Madan's Tollywood Studio, Tollygunj, 24-Parganas, applicant.

To Ram Kumar Jhunjhunwalla of 36/1, Baranashi Ghose Street, Calcutta, creditor.

On the 30th day of July 1936 it was ordered that the matter of the petition of the applicant be heard on the 14th day of September 1936, and that the said applicant do attend to be examined by this Court on that date.

S. P. BOSE, Sub-Judge.

Alipore, the 31st July 1936. (1622—1)

NOTICE TO CREDITORS OF APPLICATION FOR DISCHARGE.

Section 41 (1) of the Provincial Insolvency Act, V of 1920.

In the 4th Court of the Sub-Judge at Alipore.

INSOLVENCY CASE No. 361 OF 1935.

Tarakeswar Chatterjee of 38B, Tollygunj Road, 24-Parganas, applicant.

TAKE notice that the abovenamed insolvent has applied at the Court for his discharge, and that the Court has fixed the 14th day of September 1936 at 11 o'clock for hearing the application.

Dated this 31st day of July 1936.

S. P. BOSE, Sub-Judge.

(1623—1)

NOTICE TO CREDITORS OF APPLICATION FOR DISCHARGE.

Section 41 (1) of the Provincial Insolvency Act, V of 1920.

In the 4th Court of the Sub-Judge at Alipore.

INSOLVENCY CASE No. 394 OF 1935.

R. D'Sylva of Traffic Quarters, Belgachia, 24-Parganas, applicant.

TAKE notice that the abovenamed insolvent has applied at the Court for his discharge, and that the Court has fixed the 14th day of September 1936 at 11 o'clock for hearing the application.

Dated this 31st day of July 1936.

S. P. BOSE, Sub-Judge.

(1624—1)

NOTICE TO CREDITORS OF APPLICATION FOR DISCHARGE.

Section 41 (1) of the Provincial Insolvency Act, V of 1920.

In the 4th Court of the Sub-Judge at Alipore.

INSOLVENCY CASE No. 459 OF 1935.

E. C. Wattroy of 154, Traffic Quarters, Belgachia, 24-Parganas, applicant.

TAKE notice that the abovenamed insolvent has applied at the Court for his discharge, and that the Court has fixed the 31st day of August 1936 at 11 o'clock for hearing the application.

Dated this 25th day of July 1936.

S. P. BOSE, Sub-Judge.

(1625—1)

NOTICE TO CREDITORS OF APPLICATION FOR DISCHARGE.

Section 41 (1) of the Provincial Insolvency Act, V of 1920.

In the 4th Court of the Sub-Judge at Alipore.

INSOLVENCY CASE No. 499 OF 1935.

Nikunja Behary Das of 29G, Rakhal Ghosh Lane, Beliaghata, 24-Parganas, applicant.

TAKE notice that the abovenamed insolvent has applied at the Court for his discharge, and that the Court has fixed the 14th day of September 1936 at 11 o'clock for hearing the application.

Dated this 31st day of July 1936.

S. P. BOSE, Sub-Judge.

(1626—1)

ORDER OF ADJUDICATION.

Section 27 of the Provincial Insolvency Act, V of 1920.

In the 4th Court of the Sub-Judge at Alipore.

INSOLVENCY APPLICATION No. 72 OF 1936.

PURSUANT to a petiton, dated 17th February 1936, filed by S. B. Druart of 55/1, Diamond Harbour Road, police-station Ekbalpore, 24-Parganas, debtor, and on the application of the debtor himself and on reading his applicaton and hearing his pleader, it is ordered that the debtor be and the said debtor is hereby adjudged insolvent.

It is further ordered that the debtor do apply for his discharge within 27th January 1937.

Dated this 27th day of July 1936.

S. P. BOSE, Sub-Judge.

(1627—1)

ORDER OF ADJUDICATION.

Section 27 of the Provincial Insolvency Act, V of 1920.

In the 4th Court of the Sub-Judge at Alipore.

INSOLVENCY APPLICATION No. 234 OF 1936.

PURSUANT to a petiton, dated 18th May 1936, filed by Rajendra Nath Hazra of Fatehpore, Metiaburuz, 24-Parganas, debtor, and on the application of the debtor himself and on reading his application and hearing his pleader, it is ordered that the debtor be and the said debtor is hereby adjudged insolvent.

It is further ordered that the debtor do apply for his discharge within 27th January 1937.

Dated this 27th day of July 1936.

S. P. BOSE, Sub-Judge.

(1628—1)

ORDER OF ADJUDICATION.

Section 27 of the Provincial Insolvency Act, V of 1920.

In the 4th Court of the Sub-Judge at Alipore.

INSOLVENCY APPLICATION No. 250 OF 1936.

PURSUANT to a petition, dated 25th May 1936, filed by Devilal Dosad of 17, Rakhal Mukherjee Road, police-station Bhowanipore, 24-Parganas, debtor, and on the application of the debtor himself and on reading his application and hearing his pleader, it is ordered that the debtor be and the said debtor is hereby adjudged insolvent.

It is further ordered that the debtor do apply for his discharge within 27th January 1937.

Dated this 27th day of July 1936.

S. P. BOSE, Sub-Judge.

(1629—1)

MR. AJAY KUMAR BASU, B.Sc., B.L., intends to be enrolled as an Advocate of the Calcutta High Court.

(1581—4)

MR. BIRESWAR CHATTERJEE, M.Sc., B.L., desires to be enrolled as an Advocate, High Court.

(1592—4)

MR. SUSIL CHANDRA DAS GUPTA, LL.B., desires to be enrolled as an Advocate, High Court, Calcutta.

(1593—4)

MR. SATYENDRA NATH SEN desires to be enrolled as an Advocate, High Court.

(1594—4)

MR. SAURENDRA MOHAN BASU desires to be enrolled as an Advocate, High Court.

(1595—4)

MR. HEMENDRA NATH LAHIRI, M.A., B.L., intends to be enrolled as an Advocate of the High Court.

(1596—4)

MR. TARUN KUMAR DHAR intends to get enrolled as an Advocate, High Court.

(1597—4)

MR. GURUPADA CHAKRAVARTY, B.L., desires to be enrolled as an Advocate, High Court, Calcutta.

(1598—4)

AMARENDRANATH ROY CHOWDHURY, M.A., B.L., desires to be enrolled as an Advocate, High Court.

(1599—4)

MR. POLISETTI MAMILLAIAH, B.A., B.L., desires to be enrolled as an Advocate, High Court.

(1600—4)

MR. CHOWDHURY FAZLUL ALI, M.A., B.L., desires to be enrolled as an Advocate, High Court.

(1601—4)

MR. JNAN KUMAR CHATTERJEE, B.Com. B.L. intends to be enrolled as an Advocate, High Court.

(1602—4)

BHAGAWATI PRASAD KHAITAN, Attorney-at-Law, intends to be enrolled as an Advocate, High Court.

(1603—4)

MR. PROVAT KUMAR SEN GUPTA, M.A., B.L., desires to be enrolled as an Advocate of the High Court.

(1607—4)

MR. MANINDRA KUMAR DEB, B.L., desires to be enrolled as an Advocate of the High Court.

(1608—4)

MR. SUKUMAR GHOSE desires to be enrolled as an Advocate of the High Court, Calcutta.

(1609—4)

MR. PHANINDRA NATH GUPTA, B. L., desires to be enrolled as an Advocate of the High Court.

(1610—4)

MR. PURNENDU KUMAR BATABYAL, M.Sc., B.L., intends to join the High Court as an Advocate.

(1545—4)

AMAL CH. CHATTERJEE, LL.B., Advocate (Punjab), intends to be enrolled as an Advocate, High Court.

(1641—4)

MR. AMARENDRA NATH GUPTA, M.Sc., B.L., intends to be enrolled as an Advocate, High Court.

(1630—4)

MR. BIMAL CHANDRA DAS GUPTA, M.A., B.L., intends to be enrolled as an Advocate, High Court.

(1642—4)

MR. NISHITH RANJAN MUKHOPADHYAY, B.L., intends to be enrolled as an Advocate, High Court.

(1651—4)

MR. SATYA BHUSAN CHAKRABERTTY, M A., B.L., intends to be enrolled as an Advocate, High Court.

(1657—4)

MR. SUDHIR KUMAR BASU, M A. B.L., intends to be enrolled as an Advocate, Calcutta High Court.

(1658—4)

KHAN BAHADUR SHARFUDDIN AHMAD, B.L., intends to be enrolled as an Advocate, High Court.

(1663—4)

APPLICATIONS are invited for the post of Civil Medical Officer, Kurseong, district Darjeeling. The pay of the post will be Rs. 300—25—400 with a pony allowance of Rs. 20 per month.

The appointment will be for five years in the first instance, renewable, on satisfactory service.

Candidates should possess a medical degree of a recognised Indian University, but preference will be given to one possessing higher British qualifications in Medicine or Surgery. Candidates should be between 30 and 40 years of age and able to ride.

The selected candidate will be on probation for six months. Leave for one month on full pay for every year will be admissible on condition that a *locum tenens* is provided at his own expense.

Canvassing will disqualify. Applications supported by evidence of the qualifications possessed and of age should reach the Surgeon-General with the Government of Bengal, Writers' Buildings, Calcutta, not later than the 9th September 1936.

D. P. GOIL, Major General, I.M.S.,

Surgeon-General with the Govt. of Bengal.

WANTED a temporary Lecturer in Nyaya for the Government Sanskrit College, Calcutta, on a salary of Rs. 125 per mensem. Candidates with high proficiency in both Navya and Prachin Nyaya, teaching experience in Tol, and having published works in Sanskrit, should apply by the 20th August 1936 to the following address. Canvassing is prohibited.

N. K. DUTT, M.A., Ph.D., Principal,

Sanskrit College, Calcutta (offg.).

Calcutta, the 27th July 1936.

WANTED a temporary Lecturer in Mathematics for the Rajshahi College in the scale of Rs. 125—25/2—150—20/2—250—15/2—310—20/2—350 (efficiency bar after 16th stage) of the Subordinate Educational Service for about two years with effect from the 1st September 1936. The candidates must possess a first class degree of M.A. or M.Sc. in Mixed Mathematics of an Indian University or a good Honours degree of an European University with satisfactory evidence of sufficient teaching experience up to the B.A. and B.Sc. Honours classes.

Applications supported by documentary evidence of the qualifications possessed and of age should reach the undersigned on or before the 20th August 1936.

J. M. BOSE,

Principal, Rajshahi College.

PUBLIC are hereby informed that the partner or partners of the firm of Ebram Pir Mohamed & Co. as carrying on business at No. 24, Old China Bazar Street, in the town of Calcutta, or at No. 142, Chuckla Street, in the town of Bombay, have no concern with the firm of Ebram Pir Mohamed & Co., Managing Agents of the Bengal Glass Works, Ltd., of Dum Dum Cantonment, 24-Parganas. They have ceased to have any concern or interest in the said Managing Agency as and from the 1st of June 1936.

S. N. SEN,

Attorney-at-Law and Attorney for the Managing Agents, The Bengal Glass Works, Ltd.

Calcutta, the 6th August 1936. (1650—1)

Custom House Notice.

NOTICE is hereby given that whereas Messrs. J. F. Madan have failed to meet the demand made for duty on 15 packages of plus 4 whisky, *ex* ss. "Clan Mackwhirtor" and bonded at 5, Dharamtola Street, under warehousing bill of entry No. 40 of 12th March 1931, the said goods will be sold by auction on the 14th August 1936 at noon in Messrs. Mackenzie Lyall & Co.'s sale room at No. 5, Mission Row, Calcutta, under the provisions of section 119 of the Sea Customs Act.

G. N. BOWER, Collector of Customs.

Custom House, Calcutta, the 28th July 1936.

(1555—2)

Notice under section 10A of the Court of Wards Act IX (B.C.) of 1879.

WHEREAS under sections 7, 10 and 35 of the Court of Wards Act, IX (B.C.) of 1879, as amended up to date, the Court of Wards has assumed charge of the property of Raja Gopal Lal Ray Bahadur and his son Bhairab Lal Ray of Tajhat, district Rangpur.

Notice is hereby given under section 10A of the said Act that all creditors having claims against the said estate of Raja Gopal Lal Ray Bahadur and his son Bhairab Lal Ray or their immovable property are hereby required to submit the same in writing to the Collector of Rangpur within six months from the date of publication of this notice.

Creditors are hereby warned that claims not submitted, as required by this notice, are liable to be deemed to have been duly discharged.

H. SEN, Wards Deputy Collector.

Rangpur, the 23rd July 1936. (1557—3)

THE Bengal and Madras Service Family Pension Fund which is provisionally managed and assisted by Government has for its object the provision of monthly pensions for the maintenance of the widows and children of subscribers and is open, with certain exceptions, to all active and pensioned members of the Uncovenanted service of Government (except those serving under the Government of Bombay), and to Local Fund servants earning pensions from Government. Some of the special features of the fund are (1) that widowed daughters incapable of re-marriage or children labouring under such mental or bodily infirmities as incapacitate them from earning their livelihood or preclude the possibility of marriage (in case of a daughter) are admitted to its benefits; and (2) that subscribers to the Widows and Daughters' branches are entitled to a refund of 30 per cent. of the premia paid, should the nominee predecease them after five years of admission. The second quinquennial valuation of the Fund has been completed by the Actuary to the Government of India, and his report discloses very favourable results. For forms of application and rules of the Fund apply to the Accountant-General, Bengal, Imperial Secretariat Buildings, Calcutta.

Estate James Benjamin Baxter, deceased.

PURSUANT to section 360 of Act XXXIX of 1925 and section 42 of Act XXVIII of 1866, the creditors and all persons interested in the estate of James Benjamin Baxter, late Superintendent, Collection Department, Calcutta Port Commissioners (retired), who died at Calcutta on the 30th day of March 1933, and Letters of Administration to whose estate were granted by the High Court, Calcutta, on the 30th day of June 1936, are hereby required to submit particulars of their claims to the undersigned on or before the 14th day of September 1936, after which date the Administrator will distribute the assets, having regard only to the claims of which notice shall then have been received.

ORR, DIGNAM & CO.,
Solicitors to the Administrator.

32, Dalhousie Square, South, Calcutta, 4th August 1936.

(1632—1)

Estate Mrs. Mary Alice Mawdsley, deceased.

PURSUANT to section 360 of Act XXXIX of 1925 and section 42 of Act XXVIII of 1866, the creditors and all persons interested in the estate of Mrs. Mary Alice Mawdsley, late of "Sweet Orchard," Bracknell, in the County of Berks (formerly of Grosvenor Courts Hotel, Davies Street in the City of Westminster), who died at that address on the 22nd day of March 1936, and Letters of Administration to whose estate were granted by the High Court, Calcutta, on the 16th day of July 1936, are hereby required to submit particulars of their claims to the undersigned on or before the 13th day of September 1936, after which date the Administrator will distribute the assets, having regard only to the claims of which notice shall then have been received.

ORR, DIGNAM & Co.,
Solicitors to the Administrator.

32, Dalhousie Square, South, Calcutta, 4th August 1936.

(1639—1)

Lost Receipt.

A RECEIPT numbered 10018, dated the 23rd April 1936, and granted by the Reserve Bank of India, Public Debt Office, on submission of the undermentioned Government Promissory Note. Notice of loss has been given to the Reserve Bank of India, Public Debt Office, and the undersigned is about to apply for surrender of the security:—

G. P. Note No.	Loan.	Amount. Rs.	Holder's name.
409825	3½ per cent., 1865.	100	Joy Gopal Mookerjee.

Name of the proprietor—Joy Gopal Mookerjee.

Residence—12, Gossain Lane, Baghbazar, Calcutta.

(1631—1)

Lost Receipt.

A RECEIPT numbered 3098, dated the 22nd June 1936, and granted by the Reserve Bank of India, Public Debt Office, on submission of the undermentioned Government Promissory Note. Notice of loss has been given to the Reserve Bank of India, Public Debt Office, and the undersigned is about to apply for surrender of the security:—

G. P. Note No.	Loan.	Amount. Rs.	Holder's name.
406745	3½ per cent., 1865.	100	Satis Chandra Mittra.

Name of the proprietor—Satis Chandra Mittra.

Residence—2/2, Goa Bagan Lane, Calcutta.

(1643—1)

Lost, stolen or mislaid.

NOTICE is hereby given that Share Certificate No. C-21,700 for five shares Nos. 131313-17 in the Reserve Bank of India issued in the name of Aghorenath Ghose has been lost, stolen or mislaid. Due notice thereof has been given to the Bank and all persons are warned against dealing with the share certificate in any way.

Name of advertiser—Aghorenath Ghose, shareholder.

Address—C/o Civil Surgeon, Dinajpur.

Dinajpur, the 7th August 1936. (1653—1)

Lost, stolen or mislaid.

NOTICE is hereby given that Share Certificate No. C-21,704 for five shares Nos. 131333-37 in the Reserve Bank of India issued in the name of Ashima Sundari Debi has been lost, stolen or mislaid. Due notice thereof has been given to the Bank and all persons are warned against dealing with the share certificate in any way.

Name of advertiser—Sm. Ashima Sundari Debi, shareholder.

Address—C/o Civil Surgeon, Dinajpur.

Dinajpur, the 7th August 1936. (1654—1)

Lost, stolen or mislaid.

NOTICE is hereby given that Share Certificate No. C-21,703 for five shares Nos. 131328-32 in the Reserve Bank of India issued in the name of Upendra Nath Ganguly has been lost, stolen or mislaid. Due notice thereof has been given to the Bank and all persons are warned against dealing with the share certificate in any way.

Name of advertiser—Upendra Nath Ganguly, shareholder.

Address—C/o Civil Surgeon, Dinajpur.

Dinajpur, the 7th August 1936. (1655—1)

Lost, stolen or mislaid.

NOTICE is hereby given that Share Certificate No. C-21,702 for five shares Nos. 131323-27 in the Reserve Bank of India issued in the name of Prakas Chandra Sen has been lost, stolen or mislaid. Due notice thereof has been given to the Bank and all persons are warned against dealing with the share certificate in any way.

Name of advertiser—Prakas Chandra Sen, shareholder.

Address—C/o Civil Surgeon, Dinajpur.

Dinajpur, the 7th August 1936. (1656—1)

Destroyed Receipts.

TWO Receipts numbered 3786 and 17144, dated the 17th July 1936, and granted by the Reserve Bank of India, Public Debt Office, on submission of the undermentioned Government Promissory Notes. Notice of loss has been given to the Reserve Bank of India, Public Debt Office, and the undersigned is about to apply for surrender of the securities:—

G. P. Note No.	Loan.	Amount. Rs.	Holder's name.
Receipt No. 3786—			
191806 ..	3½ per cent., 1842-43	1,000	Kumudini Dassi.
320128 ..	3½ per cent., 1900-01	100	
016550 ..	5 per cent., 1945-55	500	
Receipt No. 17144—			
203254 ..	3½ per cent., 1842-43	500	
234217 ..	3½ per cent., 1854-55	100	
371640 ..	3½ per cent., 1900-01	100	
384022/25 ..	3½ per cent., 1900-01	100 each.	
024522 ..	5 per cent., 1945-55	200	
049336 ..	5 per cent., 1945-55	500	

Name of the proprietress—Sm. Kumudini Dassi.

Residence—14, Raja Nabokissen Street, Calcutta. (1652—1)

Stolen.

THE Government Promissory Note No. 215228 of the 3½ per cent. loan of 1854-55 for Rs. 1,000, originally standing in the name of Shora Bindu Kanoongoy (since deceased), the proprietor by whom it was never endorsed to any other person, having been stolen, notice is hereby given that payment of the above note and the interest thereupon have been stopped at the Public Debt Office, Reserve Bank of India, Calcutta, and that application is about to be made for the issue of duplicate in favour of Mohendra Kumar Kanungoe, Surendra Kumar Kanungoe and Debendra Kumar Kanungoe. The public are cautioned against purchasing or otherwise dealing with the abovementioned security.

Signature of the advertiser: Mohendra Kumar Kanungoe, retired Inspector of Police.

Residence—Ice Factory Road, Chittagong (Bengal). (1540—3)

Lost.

THE Government Promissory Note No. 017433 of 5 per cent. loan of 1945-55 for Rs. 1,000, originally standing in the name of the Imperial Bank of India and last endorsed to the District Magistrate, Tippera, the proprietor, on behalf of the Comilla Victoria College, by whom it was never endorsed to any other person, having been lost, notice is hereby given that payment of the above note and the interest thereupon have been stopped at the Public Debt Office, Reserve Bank of India, Calcutta, and that application is about to be made for the issue of the duplicate in favour of the proprietor. The public are cautioned against purchasing or otherwise dealing with the abovementioned security.

Name of the person notified—S. N. Ray, District Magistrate, Tippera, Comilla.

Comilla, the 22nd July 1936. (1504—3)

In the matter of the Indian Companies Act, VII of 1913

and

In the matter of Port Engineering Works, Limited, and Reduced.

NOTICE is hereby given that a petition presented to the Court on the 11th day of May 1936 for an order confirming the reduction of the capital of the Company from Rs. 7,50,000 to Rs. 5,00,000 is directed to be heard by the said Court on the 24th day of August 1936.

ORR, DIGNAM & Co.,
Attorneys for the said Company.

32, Dalhousie Square, South, Calcutta, 4th August 1936. (1640—1)

In the matter of the Indian Companies Act, 1913

and

In the matter of the Islamia Motor Co., Ltd. (in liquidation).

NOTICE is hereby given that a meeting of the creditors of the abovenamed Company will be held on 2nd day of September 1936, at Rajabagan at 5 p.m.

HALADHAR HAZRA, Liquidator.

Akra Road, Garden Reach, Calcutta, the 10th August 1936. (1661—1)

In the matter of the Indian Companies Act, 1913

and

In the matter of the Islamia Motor Co., Ltd. (in liquidation).

NOTICE is hereby given that by an extraordinary general meeting of the shareholders of the abovenamed Company, held on 7th day of August 1936, the Company has been voluntarily wound up and Babu Haladhar Hazra of Akra Road, Garden Reach, Calcutta, appointed as its liquidator.

LAKSHMI NARAIN DAS, Chairman.

Rajabagan, Garden Reach, Calcutta, the 10th August 1936. (1662—1)

In the High Court of Judicature at Fort William in Bengal, in Insolvency.

NOTICE is hereby given that the dividends as noted below have been declared and will be paid to the creditors on application to the undersigned with necessary documents in support:—

No. 53 of 1935.

Estate Cecil Jack Lister—1st Dividend at Rs. 25 per cent.

No. 207 of 1932.

Estate Shewnarain (Firms L. G. Sewnarain & Co. and Lakhraj Girdharilal)—1st Dividend at Rs. 6 per cent.

G. M. FALKNER, Official Assignee.

10, Old Post Office Street, Calcutta, the 6th August 1936. (1647—1)

In the Court of the District Judge of Hooghly.

NOTICE is hereby given, under the Provincial Insolvency Act, V of 1920 to his creditors that order of adjudication passed on the insolvency petition of Naran Chandra Gharui, son of late Biswa Nath Gharui, of Kurkuri, thana Khanakul, district Hooghly, registered as Insolvency Case No. 21 of 1935, has been annulled by this Court on 3rd August 1936.

S. SEN, District Judge.

Chinsura, the 3rd August 1936. (1644—1)

Graham Roberts & Co.

NOTICE is hereby given that as from the 1st June 1936, Mr. John Grant has been admitted into partnership.

GRAHAM ROBERTS & CO.,
Chartered Accountants.

5, Fairlie Place, Calcutta, the 7th August 1936.

(1664—1)

Imperial Library.

Secretariat Buildings, 6, Esplanade East, Calcutta.

Open on—

Week days and Saturdays from 10 a.m. to 7 p.m.
Sundays and Gazetted holidays from 2 p.m. to 5 p.m.

THE Imperial Library is also a Lending Library. It is free to all except children. There is no subscription to pay.

K. M. ASADULLAH, Librarian.

Registered No. C207

No. 33 of 1936

The Calcutta Gazette

THURSDAY, AUGUST 13, 1936.

CONTENTS

	Page.
Statement under the Cotton Ginning and Pressing Factories Act, 1925 ..	1091
Daily Rainfall recorded in Bengal for the month of June 1936	1092—1107
Statement showing water-levels of certain rivers in Bengal for the month of June 1936	1108—1109
Vital Statistics of towns of Bengal for the week ending 1st August 1936 ..	1110
Weather and Crop Report for the week ending 5th August 1936	1111—1114
Prices-current (wholesale and retail) of Food-grains, Salt, etc., in the districts of Bengal for the second half of July 1936	1115—1118
Abstract statement showing the approximate volume of traffic and the tollage on canals in Bengal classed as Major and Minor Works and Navigation for the month of June 1936	1119
Statements of weekly gauge-readings on the river Ganges at Rampur Boalia ..	1120
First Forecast of the Sugarcane Crop of Bengal, 1936-37	1121—1122

SUPPLEMENT.

Official Papers.

FORM C—BENGAL.

STATEMENT OF COTTON PRESSED IN THE BENGAL PRESIDENCY FOR THE WEEK ENDING THE 31st JULY 1936.

[Section 5 (2) of the Cotton Ginning and Pressing Factories Act, 1925.]

Name of Division or block.	Number of bales pressed.				District included in the block.
	During the week.	During the corresponding week last year.	Since 1st September 1935 (the date prescribed by the Local Government as the commencement of the season).	During the corresponding period last year.	
The Bengal Presidency	962 bales of 400 lbs. each.	1,654	64,359	44,857	All districts in the Presidency.

J. B. McBRIDE,

Chief Inspector of Factories, Bengal.

DAILY RAINFALL RECORDED IN BENGAL

Note—The total and the average rainfall for all districts have been

Division and district.	Station.	1	2	3	4	5	6	7
Presidency.								
24-Parganas ..	Saugar Island (Obsy.) ..	0·50	1·30	0·09	1·96	..	0·66	..
	Diamond Harbour ..	..	1·49	..	1·06	..	0·40	..
	Budge-Budge	..	3·00	0·16	0·67	0·06	0·71	..
	Canning Town	..	0·64	..	0·50	0·30	0·20	..
	Alipore (Obsy.)	..	1·59	0·12	0·52	0·35	0·33	..
	Barrackpore	..	0·12	0·58	0·43	0·52	0·33	0·72
	Dum Dum	0·85	0·98	0·72	0·95	0·12	..	..
	Baraset	..	0·20	..	..	0·30	0·50	0·60
	Basirhat	..	0·92	0·60	0·24	0·58	..	..
	Gosaba	0·63	0·23	0·23	0·41	0·16	..	..
Nadia ..	Ranaghat	..	0·05	0·35	0·22	0·28	0·12	..
	Krishnagar (Obsy.) ..	0·03	0·05	0·16	0·13	1·10	0·04	0·05
	Chuadanga	..	0·02	0·32	0·24	1·38	0·03	..
	Meherpur	..	0·25	0·50	1·20	0·05	..	0·43
	Kushtia	..	..	..	1·10	1·20	1·38	..
	Haringhata	..	0·25	0·08	0·27	..	0·82	..
Murshidabad ..	Kandi	0·12	0·07	0·32	2·86	0·76	..	2·00
	Berhampur (Obsy.) ..	..	0·16	0·22	0·52	1·30	0·53	..
	Lalbagh	0·20	..	..	0·51	2·25	0·65	..
	Azimganj	0·90	..	0·45	0·53	2·10	..	..
	Jangipur	..	0·06	..	0·70	0·68	1·90	0·09
	Lalgola	0·81	..	0·27	0·69	0·32	0·35	0·13
	Akriganj	..	1·00	0·76	1·15	0·37	1·08	..
	Patkabari	..	0·31	0·41	1·85	0·21	..	0·30
	Dumkal	..	0·85	..	0·53	1·78	0·16	..
	Kallyanganj (Ishanpur) ..	..	0·11	0·61	0·47	1·24	0·42	0·11
	Khargram	..	..	0·04	0·87	2·30	0·08	0·06
	Bharatpur	..	0·09	0·10	0·24	2 30	0·21	..
Jessore ..	Narail	..	..	0·21	2·41	..	..	..
	Jessore (Obsy.)	..	0·06	..	0·24	3·21	..	..
	Jhenida	..	..	0·25	1·27	..	..	..
	Magura	..	..	..	..	1·50	..	..
	Bongaon	..	..	0·24	0·33	0·88	0·03	0·18
Khulna ..	Satkhira (Obsy.) ..	..	0·22	0·03	0·21	0·67	0·12	..
	Bagerhat	0·50	..	..	..	0·25	..	0·50
	Khulna (Obsy.) ..	..	..	..	..	2·19	0·02	..
	Kaliganj	..	..	0·40	0·65	0·60	..	1·00
	Nakipur	..	..	0·24	0·12	0·29	..	..
	Dumuria	..	..	..	0·05	2·05	..	..
	Rampal	..	..	..	1·80	..	..	..
	Kalaroa	0·05	..	0·16	0·60	0·09	..	1·07
	Paikgachha (Raruli) ..	..	..	..	1·80	..	0·50	..
	Mollahat	..	..	..	..	1·90	..	..
	Morelganj	..	..	0·20	0·16	..	..	..
	Islamkati	..	0·05	..	0·14	0·18	0·09	..
Burdwan.								
Burdwan ..	Kalna	0·06	0·50	0·50	0·74	0·11	..	0·62
	Burdwan (Obsy.) ..	..	0·22	0·70	0·29	0·75	0·04	0·25
	Katwa	..	..	..	0·40	2·21	0·10	..
	Asansol (Obsy.) ..	0·39	..	..	1·05	0·57	0·46	0·05
	Mankar	0·60	0·55	2·07	0·03	..	..	..
	Mangalkot	0·02	0·40	0·10	1·00	..	..	1·12
	Royna	0·42	0·27	0·32	0·93	0·22	..	..
	Monteswar	..	0·12	0·30	0·70	0·08	..	1·30
Birbhum ..	Suri	0·04	..	..	0·85	0·68	0·06	0·05
	Hetampur	..	..	..	0·88	0·68	..	..
	Rampurhat	0·05	0·40	..	0·60	3·25	..	0·65
	Bolpur	..	0·90	..	..	..	..	0·18
	Murarai	1·43	..	1·40	1·30	0·62	..	..
	Labpur	..	..	..	0·75	1·20	..	0·18
	Nalhati*							
	Mayureswar	..	1·30	0·92	0·90	1·20	..	1·50

* Not reported.

FOR THE MONTH OF JUNE 1936.

calculated using the data of only those stations for which normals are available.

8	9	10	11	12	13	14	15	16	17	18	19	20
1·14	2·19	0·58	0·09	0·57	1·65	0·05	0·25	0·27	0·19	0·27	..	0·32
0·18	1·45	..	0·33	0·61	0·60	0·43	0·57	0·07	1·01	..	..	..
0·01	1·73	0·34	0·44	1·96	0·34	0·78	0·39	0·22	0·09	..	..	0·05
..	..	..	..	..	1·63	1·50	0·43	0·05	..	..	..	0·15
0·09	5·70	0·34	0·60	0·30	0·41	0·31	0·49	0·33	0·76	..	..	0·29
0·18	..	.	..	0·58	0·32	0·56	..	..	..	..	..	0·40
3·22	..	..	0·60	0·19	0·28	0·72	0·43	1·04	0·16	..	..	..
0·65	0·10	..	0 30	0·20	0·45	0·30	0·40	0·30	..	0·10	0·30	0·15
..	0·37	0·13	0·01	1·16	0·12	0·34	0·14	0·17	0·18	0·28	0·13	..
..	..	0·91	0·56	0·91	0·22	0·11	0·25	0·10	..	..	..	0·11
0·26	0·37	..	0·02	0·30	0·21	0·66	0·18	0·31	0·10	0·10	0·05	..
0·77	0·02	0·55	0·06	0·07	0·23	1·42	0·33	0·34	0·12	0·02	0·10	..
..	0·54	0·02	0·23	0·44	0·67	0·87	..	0·36	..	0·60	0·34	..
2·95	..	0·10	0·60	0·30	0·25	0·05	0·17	..	..	..	..	0·60
..	..	..	1·36	..	..	1·35	0·32	..	..	..	..	..
0·67	..	0·87	..	0·90	1·20	0·78	0·52	0·11	0·15	..	..	..
..	0·51	0·38	0·23	0·07	0·47	0·17	0·21	..	..	..	..	0·08
..	..	0·53	0·56	0·05	0·32	0·17	0·09	0·11	0·03	..	..	..
..	0·38	0·41	0 46	0·10	0·44	0·20	0·20	..	..	0·12	..	..
..	..	..	0·78	0·37	0·28	..	0·08	..	..	..	..	..
..	..	..	..	0·90	0·03	0·18	0·03	0·40	..	..	..	..
..	0·01	..	0·06	1·11	0·25	0·59	0·12	0·29	..	..	..	..
..	0·12	..	0·19	1·15	0·20	1·00	0·24	0·27	..	..	..	..
..	..	0·85	..	0·32	..	0·03	0·15	0·05	0·08	..	..	0·03
..	0·07	..	0·31	..	0·13	0·61	0·06	0·61	..	..	..	2·97
0·07	..	..	0·61	0·34	0·28	0 08	0·09	0·36	0·04	..	..	..
0·61	..	0·06	..	..	0·30	0·40	..	0·10	..	..	..	..
1·40	..	1·63	0·06	0·12	..	0·55	0·20	0·06	..	..	..	..
0·04	..	..	0·26	0·43	0·79	0·74	0·55	0·59	..	0·07	..	..
.	0·31	.	0·05	0·18	0·54	1·23	0·39	0·09	0·48	0·40	1·07	..
1·75	0·03	0·10	0·50	0·12	0·79	1·43	0·13	0·45	0·53	0·18	0·11	..
0·70	..	..	0·75	0·70	0·80	1·40	0·16	0·05	..	..	0·40	0·40
0·11	..	..	0·56	0·07	0·12	0·18	0·18	1·15	..	..	0·08	..
0·18	0·07	..	0·48	0·97	0·32	0·69	0·17	0·40	0·47	0·01	0·07	0·87
1·00	..	..	0·20	0·40	0·25	1·50	1·50	0·20	1·00	0 05	..	0·06
0·36	0·65	0·15	..	0·19	0·66	2·13	1·16	0·65	0·43	..	..	..
..	0·30	0·50	..	1·50	1·60	0·40	0·17	0·80	0·04	0·24	0·10	0·60
..	0·07	2·25	0·94	0·59	2·42	0·87	0·14	0·01	..	..	2·08	0·05
..	1 45	..	..	0·31	0·11	1·25	1 00	0·80	0·30	..	..	..
0·53	0·52	1·90	..	..	1·00	0·82	0·67	1·62	..	..	0·45	..
2·28	..	..	0·93	0·14	0·56	..	0·08	0·21	0·05	0·84	0·40	..
..	0·40	..	0·18	0·60	0·15	..	1·90	0·85	..	..	..	..
..	..	.	..	2·91	3·09	..	4·00	..	..	..	..	..
0·02	0·20	..	0·25	1·25	2·75	1·25	2 75	0·75	0·50	..	..	..
0·16	0·35	..	0 25	1·11	0·42	0·75	0 49	0·39	0·30	0·25	0·10	0·15
0·07	0·01	0·22	0·21	0·34	0·25	0·50	..	..	..	..	..	.
0·21	0·16	..	0·02	0·46	0·21	0·27	1·48	0·25	0·12	..	..	..
2·10	..	0·25	0·62	0·20	0·20	0·60	0·75	0·12	..	..	..	..
0·48	..	..	0·02	1·12	0·17	0·30	0·90	0·61	0·02	..	..	0·60
0·31	0·04	0·48	..	0·33	1·17	0·21	0·13	..	0·17	..	..	0·21
..	..	.	..	..	0·40	0·40	..	..	..	..	..	..
1·50	0·15	..	0·90	0·40	0·50	1·55	0·48	0·07	0·05	..	..	..
..	..	..	0·72	0·16	0·69	0·66	1·25	..	..	..	..	..
0·57	0·04	0·04	0·05	0·43	0·18	0·20	0 62	0·46	0·02	0·01	..	..
0·15	0·13	0 15	..	0·41	0·42	0·42	0·41	0·40	..	..	..	..
..	..	0 35	..	1·10	0·24	0·25	0·25	0·15	..	..	..	..
1·25	..	0·19	0·20	0·48	0·05	..	1·10	0·44	..	..	..	..
..	..	1 26	1·20	1·14	.	..	0·21	..	..	..	..	1·20
..	..	..	0·75	0·10	0·15	0·15	0·40	0·15	..	..	..	0·35
0·91	1·40	1·20	0·30	0·10	..	0·50	..	0·90	..	..	..	0·40

DAILY RAINFALL RECORDED IN BENGAL

Division and district.	Station.	21	22	23	24	25	26	27
Presidency.								
24-Parganas ..	Saugar Island (Obsy.) ..	..	0·10	0·03	0·02	0·43	0·06	0·56
	Diamond Harbour ..	0·41	0·84	..	0·49	0·57	0·65	0·38
	Budge-Budge ..	0·05	0·02	..	..	0·18	0·15	0·48
	Canning Town	0·35	..	..	..	1·83	1·00	1·15
	Alipore (Obsy.)	0·13	0·49	0·21	..	0·61	..	0·55
	Barrackpore	0·10	0·36	0·74	0·30	0·30	0·30	0·30
	Dum Dum	..	..	1·03	0·14	0·41	0·12	0·39
	Baraset	0·50	..	0·15	0·10	0·10	..	0·30
	Basirhat	..	..	0·60	0·07	0·52	0·15	0·09
	Gosaba	0·55	0·45	0·87	1·16	0·24	0·18	0·39
Nadia ..	Ranaghat	0·59	..	0·09	..	0·23	..	0·15
	Krishnagar (Obsy.) ..	0·22	0·22	0·24	..	0·02	0·05	0·05
	Chuadanga	..	..	..	0·03	0·22	0·11	..
	Meherpur	0·25	0·05	0·05	0·45	..	..	0·35
	Kushtia	..	..	..	..	..	0·32	..
	Haringhata	..	..	0·37	..	0·30	0·06	..
Murshidabad ..	Kandi	..	1·44	..	0·14	0·10	..	0·83
	Berhampore (Obsy.) ..	0·91	0·51	1·02	..	0·18	0·13	..
	Lalbagh	0·09	0·17	0·15	..	0·06	0·12	..
	Azimganj	..	1·62	..	0·06	0·13	..	0·37
	Jangipur	0·47	0·35	..	..	0·05	0·07	0·05
	Lalgola	0·01	0·03	0·17	..	0·44	0·01	..
	Akriganj	..	..	..	..	0·16	..	0·12
	Patkabari	..	..	0·08	0·11	..	..	0·44
	Dumkal	0·12	0·56	0·72	..	..	..	0·17
	Kalyanganj (Ishanpur) ..	0·76	0·06	..	..	..	0·44	..
	Khargram	0·17	0·12	0·53	..	0·20	.	..
	Bharatpur	..	..	..	..	..	0·09	..
Jessore ..	Narail	0·17	1·51	..	0·14	..	..	..
	Jessore (Obsy.)	0·17	1·73	0·04	0·13	0·50	0·17	0·11
	Jhenida	..	0·10	..	0·52	0·10	..	0·48
	Magura	0·30	..	..	0·40	..	..	0·20
	Bongaon	..	..	..	..	0·06	0·32	0·11
Khulna ..	Satkhira (Obsy.)	0·20	0·06	..	0·05	..	0·06	0·01
	Bagerhat	..	..	0·02	0·10	..	..	..
	Khulna (Obsy).	0·08	..	0 48	..	0·15	0·60	0·07
	Kaliganj	1·00	..	..	0·36	0·33	0·18	0·14
	Nakipur	0·03	..	0·07	0·42	0·40	..	..
	Dumuria	..	..	..	..	..	0 35	..
	Rampal	..	..	..	..	0·25	0·35	..
	Kalaroa	..	..	0·09	0·11	0·15	0·14	0·09
	Paikgachha (Raruli) ..	1 35	..	..	0·65	..	..	0·15
	Mollahat	..	..	..	..	..	1·26	..
	Morelganj	0·75	0·35	1·40	0·12	0·55	0·75	0·25
	Islamkati	0·07	2·13	..	0·16	..	0·04	0·05
Burdwan.								
Burdwan ..	Kalna	..	..	..	0·57	0·84	0·11	..
	Burdwan (Obsy.)	..	0·02	..	0·02	0·09	0·12	0·03
	Katwa	..	..	..	..	0·30	0·20	0·21
	Asansol (Obsy.)	..	..	..	..	..	0·10	0·17
	Mankar	..	..	..	..	0·12	0·14	..
	Mangalkot	0·23	..	0·08	0·50	..	..	0·05
	Royna	..	..	..	0·50	..	0·50	0·34
	Monteswar	..	..	..	0·35	0·17	..	..
Birbhum ..	Suri	..	..	..	..	0·00	0·03	0·04
	Hetampur	..	..	..	..	..	0·27	0·45
	Rampurhat	..	..	..	0·20	..	0·40	0·65
	Bolpur	..	..	..	..	..	..	..
	Murarai	..	..	..	0·30	..	..	..
..	Labpur	..	..	0·20	0·12	..	..	0·36
	Nalhati*							
	Mayureswar	..	..	..	0·60	..	..	..

* Not reported.

FOR THE MONTH OF JUNE 1936.

28	29	30		Number of rainy days.	Average number of rainy days.	Total rainfall for the month.	Normal rainfall for the month.	Heaviest rainfall during month.	Total rainfall from 1st June to 30th June 1936.	Normal rainfall from 1st June to 30th June 1936.
1·59	3·22	1·33		20	12·3	19·42	11·54	3·22	19·42	11·54
1·30	2·02	0·62		20	12·1	15·48	11·68	2·02	15·48	11·68
0·35	2·70	0·39		18	14·2	15·33	12·79	3·06	15·33	12·79
1·10	1·50	0·60		15	13·3	12·93	11·87	1·83	12·93	11·87
0·54	0·61	0·33		23	13·3	16·00	11·90	5·70	16·00	11·90
0·90	0·25	0·30		21	12·0	8·59	10·42	0·90	8·59	10·42
0·82	1·06	0·75		21	12·4	14·98	11·38	3·22	14·98	11·38
0·20	0·10	0·20		23	12·6	8·50	10·53	0·65	8·50	10·53
0·50	0·91	0·61		20	13·0	8·85	12·01	1·16	8·85	12·01
1·05	0·51	0·25		23	(n)	10·48	(n)	1·16	10·48	(n)
0·05	..	0·79		17	12·7	5·48	10·03	0·79	5·48	10·03
0·05	0·26	1·03		16	13·0	7·73	10·66	1·42	7·73	10·66
0·37	1·20	0·74		16	13·2	8·73	10·59	1·38	8·73	10·59
1·45	0·45	0·20		17	13·0	10·70	10·30	2·95	10·70	10·30
0·85	0·60	0·68		10	13·7	9·16	10·85	1·38	9·16	10·85
0·09	0·90	0·45		15	10·3	8·79	7·27	1·20	8·79	7·27
0·36	0·96	0·22		18	12·8	12·30	10·51	2·86	12·30	10·51
0·46	0·52	1·11		18	12·3	9·43	10·04	1·30	9·43	10·04
0·42	0·75	0·77		18	12·1	8·45	10·51	2·25	8·45	10·51
0·38	0·63	..		12	12·2	8·68	10·31	2·10	8·68	10·31
0·53	0·10	1·09		14	12·1	6·78	10·35	1·09	6·78	10·35
0·79	0·07	1·03		15	12·0	7·55	10·06	1·11	7·55	10·06
0·75	..	1·22		16	12·5	9·78	11·35	1·22	9·78	11·35
0·63	0·46	0·06		12	10·9	6·37	9·55	1·85	6·37	9·55
0·42	0·37	0·28		16	12·1	10·92	10·57	2·97	10·92	10·57
0·25	0·40	0·81		15	12·9	7·55	11·98	1·24	7·55	11·98
0·98	0·42	1·41		13	(n)	8·67	(n)	2·30	8·67	(n)
0·70	0·04	0·58		11	(n)	8·37	(n)	2·30	8·37	(n)
0·57	0·35	0·12		14	14·3	8·95	12·04	2·41	8·95	12·04
..	0·48	0·42		18	14·3	12·00	12·67	3·21	12·00	12·67
0·15	0·47	..		19	14·3	9·46	12·51	1·75	9·46	12·51
..	0·55	..		13	14·0	8·31	11·48	1·50	8·31	11·48
..	0·78	0·27		14	13·3	5·65	10·81	1·15	5·65	10·81
0·17	0·35	1·81		17	14·8	8·66	13·90	1·81	8·66	13·90
1·10	1·25	..		14	15·7	9·88	14·14	1·50	9·88	14·14
0·11	0·44	0·64		16	15·0	11·16	13·88	2·19	11·16	13·88
1·28	0·50	..		21	13·7	12·69	14·62	1·60	12·69	14·62
0·41	0·94	0·74		15	13·0	13·11	13·31	2·42	13·11	13·31
0·38	0·35	1·42		12	14·4	9·82	13·08	2·05	9·82	13·08
0·60	0·72	0·38		14	14·4	11·61	12·60	1·90	11·61	12·60
0·63	1·46	0·63		16	14·3	10·76	11·47	2·28	10·76	11·47
..	0·60	2·18		13	14·0	11·31	12·71	2·18	11·31	12·71
..	1·44	..		6	14·5	14·60	14·49	4·00	14·60	14·49
0·20	0·35	0·28		20	16·1	15·08	15·81	2·75	15·08	15·81
..	0·80	1·38		18	13·1	9·79	11·95	2·13	9·79	11·95
0·53	0·66	..		15	12·2	6·87	10·32	0·84	6·87	10·32
.2	1·53	1·80		16	12·8	9·04	10·24	1·80	9·04	10·24
..	0·42	0·42		16	12·0	9·10	10·02	2·21	9·10	10·02
0·10	1·83	5·50		16	12·3	14·44	11·71	5·50	14·43	11·71
2·10	3·39	..		15	10·9	12·35	9·60	3·39	12·35	9·60
0·08	1·40	0·09		9	14·0	5·90	12·86	1·40	5·90	12·86
3·60	0·60	0·25		18	13·7	13·55	10·86	3·60	13·55	10·86
..	..	0·89		12	13·6	7·39	12·61	1·30	7·39	12·61
0·53	1·29	2·94		11	12·2	9·13	10·73	2·94	9·13	10·73
0·18	0·30	1·87		15	12·7	7·12	10·35	1·87	7·12	10·35
0·12	..	3·85		15	11·8	12·51	10·57	3·85	12·51	10·57
1·00	0·20	2·76		11	11·5	8·75	9·43	2·76	8·75	9·43
..	1·45	1·20		12	12·5	12·71	12·23	1·45	12·71	12·23
0·20	0·25	1·85		16	12·6	7·16	10·59	1·85	7·16	10·59
					(n)		(n)			(n)
1·10	..	..		15	(n)	13·23	(n)	1·50	13·23	(n)

(n) Not ascertained.

DAILY RAINFALL RECORDED IN BENGAL

Division and district.	Station.	1	2	3	4	5	6	7
Burdwan—*concld.*								
Bankura ..	Bankura (Obsy.)	..	1·06	0·27	0·57	0·13	1·03	0·03
	Vishnupur	..	0·65	0·10	0·47	0·84	0·68	0·12
	Mahara	..	..	0·61	0·52	1·05	0·39	0·06
	Khatra	..	0·75	0·10	1·60	..	0·05	0·18
	Indas	..	0·98	0·35	0·30	0·48	1·90	0·14
	Kotalpur	..	1·00	0·06	0·55	..	0·80	..
	Onda	..	0·74	0·29	0·97	0·20	1·19	1·83
	Gangajalghati	..	0·37	..	..	1·23	0·18	..
	Raipur	0·07	1·80	..	1·05	..	1·01	0·03
	Sonamukhi	0·15	..	0·15	0·30	0·24	..	0·03
	Taldangra	..	0·82	..	..	..	0·33	0·51
	Saranga	0·01	1·38	..	1·62	..	..	0·06
	Indpur	..	0·73	0·02	0·13	..	0·60	0·05
	Arhara	0·03	0·17	0·29	0·52	0·83	0·12	..
	Barjora	..	0·59	0·08	1·77	0·45	0·07	0·27
	Simlapal	2·10	..	0·75	..	1·30	2·13	0·49
	Mejia	0·12	..	..	0·21	..	0·33	0·17
	Siromanipur	..	1·30	..	..	1·00	1·00	..
	Palasdanga	..	..	1·00	0·45	0·53	0·10	0·12
	Chatna	0·32	0·82	0·41	1·72	1·62	0·12	..
	Ranibandh	0·47	..	0·60	..	0·35	..	0·20
	Saltora	..	..	0·07	0·09	0·48	0·41	0·17
	Joypur	..	0·40	..	0·60	0·84	1·48	0·10
	Ambikanagar	..	..	..	0·61	0·32	0·54	0·14
	Jairampur	..	2·54	0·05	1·11	1·50	1·15	0·20
Midnapore	Contai	..	1·16	..	3·11	..	2·15	1·05
	Tamluk	2·60	..	1·43	..	..	0·18	0·30
	Midnapore (Obsy.) ..	..	1·72	..	1·75	..	0·38	0·42
	Ghatal	3 40	..	1·45	..	0·45	..	0·15
	Kukrahati	1·42	..	1·49	..	0·22	..	..
	Amlagura	..	0·61	..	1·04	..	1·80	0·15
	Panskura	..	3·60	..	1·90	..	..	0·70
	Dantan	2·00	0·07	2·52	..	0·60	0·15	0·09
	Chandrakona	2·75	..	0·97	..	0·83	..	0·30
	Pachet	..	0·65	1·33	..	.	0·54	0·02
	Bhagwanpur	..	2·07	..	1·35	.	0·52	0·70
	Kashiary	4·94	0·25	3·20	..	2 30	..	1·20
	Nayabasan	0·11	2·78	0·20	1·35	..	0·44	0·17
	Silda (Belpabari) ..	0·32	..	0·82	..	..	0·03	0·10
	Goaltore	..	0·80	..	0·58	0·03	0·12	0·07
	Salboni	1·70	..	1·80	..	0·20	..	0·30
	Narayangarh	2·10	..	2·55	..	0·52	0·05	0·59
	Ramnagar	0·25	..	2·85	..	1 22	0·33	0·22
	Mohanpur	..	1·00	..	0·50	..	0·40	0·30
	Jenka (Khajri)	..	2·70	..	1·40	..	0·85	0·03
	Nandigram	2·11	..	2·01	..	0·21	0·16	0·09
	Moyna	2·51	1·03	2·00	0·50	..	..	..
	Pingla	3·6	..	2·90	..	..	0·60	..
	Narajole	0·60	..	..	0·40	..	0·60	0·20
	Kolaghat (Dainan) ..	..	4·07	0·01	1·20	..	0·02	1·00
	Balichak	..	2·36	..	1·87	..	0·07	0·44
	Jhargram	0·86	0·16	4·02	..	0·35	..	0·62
	Kharagpur	1·11	0·08	1·53	..	0·97	0·33	0·67
Hooghly ..	Serampore	0·46	0·51	0·45	0·58	0·20	..	..
	Hooghly	..	0 49	0·09	0·57	0·90	0·17	..
	Arambagh	..	1·18	0·64	0·63	0·72	0·41	..
	Chanditala	0·50	0·89	0·61	1·25	0·18	..	..
	Tentulia	0·15	..	0·25	0·55	0·32	..	0·20
	Bainchee	..	0·30	0·58	0·61	0·74	..	..
	Khanakul	1·24	0·03	0·85	..	..	0·80	..
	Tarakeswar*							
Howrah ..	Howrah	..	2·03	0·37	0·50	0·52	0·47	..
	Uluberia	..	6·35	0·26	1·02	0·04	0·70	..
	Amta	..	3·60	..	0·97	0·07	0·90	..
Rajshahi.								
Rajshahi ..	Boalia (Obsy.)	0·45	1·10	5·00	1·12	0·15	0·40	0·20
	Nator	1·59	..	0·70	0·10	0·25	..	..
	Naugaon	0·15	..	..	1·40	..	0·60	..
	Lalpur	..	..	1·39	0·13	..	..	..
	Manda	..	0·45	..	0·62	..	..	..
	Mahadebpur	0·33	0·09	0·66	0·43	..	0·33	..
	Tanor*							
	Chaugram	0·36	1·88	..	0·64	..	1·22	0·32
	Joari	0·50	..	1·25	..	1·00	1·50	..
	Badalgachi	0·40	0·60	..	1·30	..	0·80	..

* Not reported.

FOR THE MONTH OF JUNE 1930.

8	9	10	11	12	13	14	15	16	17	18	19	20
0·03	..	0·76	0·89	0·24	0·23	0·64	0·57	0·06	..	..	..	..
..	..	0·98	0·45	0·61	0·74	0·42	0·59	0·07	..	..	..	..
0·86	..	1·32	0·95	0·19	0·18	0·52	0·12	..	..	0·09	..	1·62
0·29	..	1·65	0·52	0·45	0·70	0·30	0·10	..	..	..	..	..
..	0·20	0·45	0·05	0·89	0·40	0·42	0·38	0·23	0·02	..	..	..
..	0·08	1·50	..	0·77	0·50	0·42	0·55	0·05	..	..	..	..
..	0·20	0·81	0·43	0·57	0·52	0·48	0·41	0·08	..	..	..	..
0·24	..	0·61	0·46	0·39	0·33	0·12	0·67	0·17	..	..	..	..
0·90	1·05	1·70	..	1·07	0·94	0·65	0·05	..	..	..	..	..
..	0·88	0·04	0·47	0·10	0·28	0·41	0·20	..	..	..	..	..
1·03	..	3·09	0·60	1·09	1·27	0·73	2·27	0·20	..	..	..	..
0·46	0·43	1·25	..	0·69	0·73	0·39	0·05	0·19	..	..	..	..
0·04	..	1·02	0·36	0·45	0·86	0·63	1·32	0·06	..	..	..	..
0·12	0·05	0·18	0·28	0·41	0·43	0·22	0·18	..	0·05	..	..	0·05
..	0·47	1·24	0·32	0·04	0·13	0·50	0·30	0·06	0·09	..	..	..
0·36	1·08	1·15	1·95	0·59	1·15	..	..	..	..	..	..	..
0·25	..	..	..	0·39	0·10	0·54	0·10	..	..	..	0·04	0·20
0·10	1·30	0·50	..	0·50	0·22	0·56	..	..	..	..	..	..
0·18	0·15	0·11	0·45	0·40	0·11	0·10	0·36	..	..	..	..	..
0·20	0·25	0·39	0·15	0·20	..	0·46	0·17	..	..	..	..	..
0·25	1·10	..	1·50	1·50	0·60	0·30	0·10	..	..	..	..	1·10
..	0·07	..	0·47	0·03	0·18	0·11	0·17	..	..	..	..	..
2·23	..	1·07	0·87	0·10	0·16	0·22	..	..	..	0·61	..	..
0·72	..	..	..	..	0·62	0·41	..	..	0·53	1·24	0·63	0·21
..	..	..	1·50	0·05	1·03	1·00	0·30	0·03	0·07	0·08	..	..
2·20	2·45	0·05	1·07	1·05	2·15	0·20	0·48	0·23	..	..	..	..
0·92	0·09	..	0·92	0·70	0·26	0·70	..	..	..	..	..	..
0·16	0·10	0·64	..	1·39	0·62	0·67	0·05	0·17	..	0·07	..	..
1·20	..	..	..	0·40	0·15	0·75	0·40	..	..	..	..	..
1·28	..	1·15	0·90	0·65	0·30	0·34	0·25	0·30	..	..	..	..
0·12	..	0·30	0·22	0·90	0·52	0·61	1·23	0·09	0·02	0·78	..	1·03
0·30	0·40	0·40	..	1·10	1·30	0·54	0·80	0·40	0·04	0·10	..	..
0·41	0·19	0·06	1·51	0·81	0·45	0·15	0·11	..	..	..	..	..
..	0·10	..	..	0·88	0·32	0·42	0·60	..	..	0·30	..	..
0·38	0·22	0·27	0·51	1·99	0·64	0·72	0·28	0·04	..	..	..	..
0·63	0·44	0·58	0·06	0·40	0·90	0·25	0·54	..	..	..	..	..
1·44	0·70	..	1·60	1·30	0·70	..	..	..	..	..	..	..
0·15	0·45	0·82	0·06	1·96	0·56	0·43	..	0·15	..	0·08	..	..
1·02	0·68	0·05	0·50	1·90	0·60	0·05	0·10	..	..	..	0·27	0·08
0·50	0·35	1·73	0·17	1·25	0·43	0·45	0·07	..	..	0·29	..	..
..	..	0·59	1·00	0·40	0·70	0·10	0·20	..	0·20	..	..	..
..	0·10	..	0·95	0·73	0·44	..	..	..	..	..	0·10	..
1·28	1·29	..	0·84	1·56	0·63	0·39	0·19	..	..	..	0·02	..
0·10	0·20	0·40	0·80	1·50	1·00	0·50	0·30	0·40	0·02	..	..	..
1·22	1·18	..	0·04	0·85	1·55	0·12	1·10	0·36	0·15	..	..	..
1·47	..	0·28	0·20	0·91	0·23	1·16	0·05	..	0·06	..	..	..
..	1·45	1·00	0·56	1·36	1·45	0·67	0·53	1·44	0·50	0·90	0·11	0·17
..	..	1·00	0·90	..	0·56	0·78	0·53	..	..	..	..	..
..	0·20	0·40	0·20	1·40	..	..	0·60	1·00	..	0·40	0·10	0·50
0·03	1·20	0·60	0·03	1·20	0·32	0·25	0·50	0·14	0·03	0·46	..	..
0·62	0·05	0·38	0·05	1·55	0·55	0·87	0·38	0·19	..	..	..	..
1·58	..	1·18	..	2·00	2·06	0·40	0·18	..	..	..	0·35	0·04
0·59	0·55	..	1·17	0·60	0·25	0·04	0·15	..	0·14	..	..	..
2·00	..	..	0·23	0·09	0·50	0·34	0·23	0·15	0·02	..	0·13	..
0·08	0·68	..	..	0·57	0·53	0·67	0·64	0·32	0·09	..	..	..
..	2·21	0·33	..	0·92	0·18	0·58	0·42	0·20	0·47	..	..	..
..	3·25	..	0·51	0·56	0·63	0·75	0·40	..	..	..	..	0·21
..	..	..	0·75	..	1·00	..	0·60	0·37	..	..	..	..
0·61	0·81	..	..	0·65	0·30	1·12	0·61	0·25	0·10	..	..	..
0·30	0·10	..	..	0·70	0·35	0·35	0·60	..	..	..	..	..
0·10	5·95	0·01	0·03	0·20	0·50	0·30	0·54	0·30	0·54	0·02	0·01	0·06
..	1·47	0·40	0·72	2·20	0·76	0·85	0·55	..	0·24	0·07	..	..
..	0·60	0·05	0·40	1·45	0·16	0·25	1·07	0·05	..	..	..	..
..	0·05	..	0·60	1·20	0·40	0·55	0·10	0·10	0·30	..	..	..
..	..	0·85	0·02	0·06	0·75	0·42	0·68	0·05	0·10	..	..	0·21
..	..	..	..	0·30	0·25	..	1·35	..	..	0·50	..	..
0·47	..	0·96	..	..	1·15	1·00	..	..	..	0·17	0·10	0·82
..	..	..	..	..	1·16	..	0·92	0·66	0·18	..	..	..
..	..	..	1·50	0·12	..	0·15	1·45	0·25	..	..	..	..
0·26	0·24	0·16	0·86	0·24	0·38	0·12	1·26	..	..	0·58	0·44	4·38
..	0·05	1·80	..	..	0·90	1·00	0·20	..	..	..	1·00	..
..	..	..	..	..	..	0·40	..	..	..	..	..	..

DAILY RAINFALL RECORDED IN BENGAL

Division and district.	Station.	21	22	23	24	25	26	27
Burdwan—*Concld.*								
Bankura ..	Bankura (Obsy.)	..	..	..	0·06	0·14	0·01	0·04
	Vishnupur	..	..	..	.	..	0 06	..
	Maliara .. .	..	..	..	..	..	.	0·44
	Khatra	0·40	..	..	.	0·50	0·05	0·45
	Indas	0 65	..	..	..	0·22	0·26	0·38
	Kotalpur	..	.	..	..	0·10	..	0 09
	Onda	0·32	..	..	..	..	..	..
	Gangajalghati	..	..	..	.	.	..	0·27
	Raipur	0·07	..	..	..	0·72	..	0·33
	Sonamukhi	..	..	..	..	0 32	0 12	0·65
	Taldangra	0·90	..	..	..	.	..	0·33
	Saranga	..	..	..	..	0 31	0·02	0·44
	Indpur	0·30	..	..		0 09	0·11	0·03
	Arhara	..	..	0·08	0·05	0·70	0·13	0·08
	Barjora	..	..	..	.	0 11	..	0·27
	Simlapal	..	..	..	0·27	0 03	0 18	1·08
	Mojia	..	..	..	..	..	0 38	0·02
	Siromanipur	..	..	..	..	0·75	.	0·30
	Palasdanga	..	..	..		..	0 40	0·10
	Chatna	..	..	..	.	0 97	0 17	0 53
	Ranibandh	..	..	0·20	0·50	0·30	0 25	1 18
	Saltora	..	..	..	0·21	..	0·24	0 25
	Joypur	..	..	..	0·10	..	.	..
	Ambikanagar	..	..	0·74	1·32	0 91	..	..
	Jairampur	..	..	..	..	0·09	..	0 02
Midnapore ..	Contai	0·10	..	0·52	0·11	1·15	0·10	0·38
	Tamluk	0·62	..	..	0·66	0·30	0·82	0·52
	Midnapore(Obsy.) ..	..	..	..	..	1·30	..	0 41
	Chatal	..	..	0·61	1·53	..	0·30	0·28
	Kukrahati	..	..	0·05	0·10	0·71	0·11	1·21
	Amlagura	..	..	..	..	0·39	..	..
	Panskura	..	..	..	0·20	0·11	0·30	0·60
	Dantan	..	..	0·08	0·52	0·50	1·56	3·21
	Chandrakona	..	..	..	..	1·00	..	0·22
	Pachot	..	..	..	..	1 11	0·19	0·65
	Bhagwanpur	..	0·71	..	..	0·80	0·11	0·59
	Kashiary	..	..	..	1·50	0 30	1·16	2·90
	Nayabasan	..	..	..	0·07	0·06	0·25	0·08
	Silda (Belpahari)	..	..	1·46	0·20	0·09	1 70	0·52
	Goaltore	0·40	..	..	..	0 80	0·07	0 55
	Salboni	..	..	0 25	..	0·35	0·17	0·87
	Narayangarh	0·15	0·05	0·20	0·25	0·15	0·70	0·05
	Ramnagar	0·04	1·84	0 20	..	0 35	2·12	4·04
	Mohanpur	..	..	..	0 05	1·00	0 34	1 50
	Jenka (Khajri)	..	..	1·20	0·07	0·30	0 65	0·60
	Nandigram	..	0·83	0·74	.	0·26	0·51	0·80
	Moyna .. .	.	..	..	..	0·74	2·34	2·50
	Pingla	..	..	0·27	..	..	0·20	0 83
	Narajole	..	..	0·40	..	0·30	0·40	0·20
	Kolaghat (Daiman) ..	..	0 05	0·13	0 05	0·05	0·03	0·26
	Balichak	..	..	..	0 07	0 20	0 05	0·42
	Jhargram	..	..	..	0·10	0·60	0·11	0·52
	Kharagpur	..	..	0·08	0 56	0 05	0 58	1·50
Hooghly ..	Serampore .. .	.	..	0 56	0·12	0 07	0·13	0·35
	Hooghly	..	..	..	1·07	0·31	0 12	0·03
	Arambagh	..	..	..	..	0·30	0·18	..
	Chanditala	0 20	..	0·15	0·25	..	0 30	0·40
	Tentulia	..	0·87	..	1·18	0·22	..	..
	Boinchee	0·77	..	..	..	1 13	0 07	0·02
	Khanakul	..	..	0·65	0·20	0·13	0 56	0·82
	Tarakeswar*							
Howrah ..	Howrah	0·06	1·07	0·43	..	0·75	..	0·10
	Ulubaria	..	0·15	..	..	0·60	0 11	0·90
	Amta	..	..	..	..	0·60	0·30	0·68
Rajshahi.								
Rajshahi ..	Boalia (Obsy.)	0·15	0·10	..	0·85	..	0·10	..
	Nator	..	..	0·23	..	..	..	0·27
	Naugaon	..	..	0·24	..	..	.	..
	Lalpur	.	..	..	..	..	..	0·40
	Manda	0·07	0·18	..	..	.	..	..
	Mahadebpur	..	..	..	..	0 15	..	..
	Tanor*							
	Chaurram	0·56	..	..	..	..	..	0·14
	Joari	..	..	1·00	..	..	..	..
	Badalgachi	..	..	..	..	..	..	0·60

* Not reported.

FOR THE MONTH OF JUNE 1936.

28	29	30		Number of rainy days.	Average number rainy days.	Total rainfall for the month.	Normal rainfall for the month.	Heaviest rainfall during the month.	Total rainfall from 1st to 30th June 1936.	Normal rainfall from 1st to 30th June 1936.
0·11	1·15	6·10		15	11·9	14·12	11·09	6·10	14·12	11·09
0·11	1·41	4·23		15	11·9	12·53	10·02	4·23	12·53	10·02
0·36	2·15	3·62		16	12·1	15·05	10·06	3·62	15·05	10·06
0·95	0·55	2·25		17	12·3	11·84	11·01	2·25	11·84	11·01
0·34	1·25	2·04		20	11·7	12·33	9·36	2·04	12·33	9·36
..	0·70	1·70		11	10·9	8·87	10·02	1·70	8·87	10·02
0·14	1·12	3·75		17	10·7	14·05	8·20	3·75	14·05	8·20
0·26	4·80	3·34		15	11·4	13·44	10·62	4·80	13·44	10·62
0·96	0·38	0·87		14	12·1	13·65	10·18	1·80	13·65	10·18
2·61	2·85	0·06		16	10·9	9·86	9·77	2·85	9·86	9·77
1·66	1·91	3·67		16	11·0	20·41	8·40	3·67	20·41	8·40
1·02	0·19	1·37		14	11·2	10·61	11·05	1·62	10·61	11·05
0·45	0·92	5·35		15	11·2	14·12	8·78	5·35	14·12	8·78
0·80	6·00	0·78		17	(n)	12·55	(n)	6·00	12·55	(n)
1·71	2·09	0·11		15	(n)	10·67	(n)	2·09	10·67	(n)
1·30	1·18	0·75		17	(n)	17·83	(n)	2·13	17·83	(n)
0·20	5·00	3·00		14	(n)	11·05	(n)	5·00	11·05	(n)
0·28	0·50	1·50		14	(n)	9·81	(n)	1·50	9·81	(n)
0·21	2·08	3·58		18	(n)	10·43	(n)	3·58	10·43	(n)
0·67	4·00	0·09		18	(n)	13·26	(n)	4·00	13·26	(n)
0·46	2·43	1·30		20	(n)	14·69	(n)	2·43	14·69	(n)
0·70	3·23	0·17		13	(n)	7·05	(n)	3·23	7·05	(n)
0·82	2·16	2·95		16	(n)	13·71	(n)	2·95	13·71	(n)
0·64	0·54	0·14		17	(n)	10·29	(n)	1·32	10·29	(n)
..	1·24	7·94		11	(n)	19·90	(n)	7·94	19·90	(n)
1·37	0·32	0·44		21	11·2	21·84	10·48	3·11	21·84	10·48
0·15	0·22	..		16	11·6	11·39	10·62	2·60	11·39	10·62
1·05	0·77	4·72		16	13·0	16·39	10·50	4·72	16·39	10·50
2·43	0·27	..		15	12·0	13·77	10·13	3·40	13·77	10·13
1·68	0·65	..		17	12·8	13·14	12·31	1·68	13·14	12·31
1·81	2·90	3·05		17	11·7	17·57	10·34	3·05	17·57	10·34
0·70	0·30	0·90		19	12·6	14·72	10·92	3·60	14·72	10·92
0·80	2·32	0·02		17	11·6	18·13	10·44	3·21	18·13	10·44
1·00	2·20	1·80		15	12·5	13·89	12·58	2·75	13·89	12·58
1·28	1·16	0·18		17	12·1	12·16	11·82	1·99	12·16	11·82
1·29	0·14	0·29		18	14·1	12·37	14·26	2·07	12·37	14·26
0·30	4·10	0·05		16	10·4	27·95	10·64	4·95	27·95	10·64
2·08	..	1·70		16	11·1	13·95	10·65	2·78	13·95	10·65
0·12	0·86	0·72		17	12·8	12·19	10·67	1·70	12·19	10·67
0·95	0·40	0·54		17	13·3	10·55	10·81	1·73	10·55	10·81
1·42	1·30	0·10		17	12·6	11·65	12·30	1·80	11·65	12·30
0·90	0·30	..		17	13·9	11·78	13·27	2·55	11·78	13·27
1·27	0·55	0·10		20	11·9	21·67	13·87	4·04	21·67	13·87
0·30	0·40	1·00		19	11·3	12·01	11·01	1·50	12·01	11·01
1·80	0·75	1·35		17	14·3	18·27	14·85	2·70	18·27	14·85
0·23	0·46	..		17	14·7	12·77	13·78	2·11	12·77	13·78
2·46	4·07	0·70		22	11·3	29·09	11·28	4·07	29·09	11·28
..	1·50	1·90		13	12·3	15·57	11·83	3·60	15·57	11·83
6·10	0·60	..		19	12·6	8·60	14·62	1·40	8·60	14·62
0·46	0·35	0·20		16	(n)	12·75	(n)	4·07	12·75	(n)
1·04	0·22	1·76		15	(n)	13·14	(n)	2·36	13·14	(n)
0·80	0·97	0·56		19	(n)	18·06	(n)	4·02	18·06	(n)
0·86	1·50	..		17	(n)	13·31	(n)	1·53	13·31	(n)
1·43	0·25	0·23		19	12·5	8·73	9·94	2·00	8·73	9·94
0·04	0·65	0·38		16	12·5	8·40	9·87	1·07	8·40	9·87
0·45	1·00	0·43		18	12·5	11·25	9·90	2·21	11·25	9·90
0·79	0·68	0·42		20	(n)	12·93	(n)	3·25	12·93	(n)
1·42	..	0·08		13	(n)	7·88	(n)	1·42	7·88	(n)
..	1·16	0·79		16	(n)	10·62	(n)	1·16	10·62	(n)
1·00	0·13	..		16	(n)	8·81	(n)	1·24	8·81	(n)
					(n)		(n)			(n)
0·40	0·52	0·39		20	12·7	16·17	11·21	5·95	16·17	11·21
0·34	2·26	0·30		19	13·9	20·29	11·20	6·35	20·29	11·20
0·25	2·65	0·15		15	12·9	14·20	12·54	3·60	14·20	12·54
0·90	0·11	0·50		21	13·1	14·43	11·17	5·00	14·43	11·17
0·10	0·16	..		14	12·3	6·54	11·10	1·59	6·54	11·10
..	0·20	0·25		10	12·9	5·24	12·76	1·40	5·24	12·76
0·17	0·56	0·20		13	11·9	7·61	10·92	1·39	7·61	10·92
..	..	..		7	11·9	4·24	10·99	1·16	4·24	10·99
..	0·10	0·29		12	13·0	5·85	11·80	1·50	5·85	11·80
					12·3		10·35			10·35
..	..	..		18	(n)	14·04	(n)	4·38	14·04	(n)
1·75	1·10	1·00		13	(n)	14·05	(n)	1·80	14·05	.. (n)
..	..	..		6	(n)	4·10	(n)	1·30	4·10	(n)

(n) Not ascertained.

DAILY RAINFALL RECORDED IN BENGAL

Division and district.	Station.	1	2	3	4	5	6	7
Rajshahi.								
Dinajpur ..	Nithpur	..	..	0·33	0 28	0 30	0 03	0 16
	Nawabganj	0·05	1·00	0 09	0 05	0 08		0 04
	Gangarampur .. .	0·91	0 63	..	..	..	0 40	
	Itahar	0 23	0 51	0 06	0 09	..	0 46	.
	Raiganj	1 90		.		0 30		.
	Dinajpur (Obsy.) .	1·12	0·04	0 86	0 04	0 58	0 12	..
	Balurghat	..	0 47	1·03	0 03	0 25	..	
	Thakurgaon	1·09	2 50	0·83	.	0 07	.	
	Setabganj ..	1·00	0 04	0 48		0 50		0 04
	Ramganj*							
	Atwari	1·15	..	0·43	1 00	2 00	..	..
	Birganj . ..	1 46	0 37		0 20			0 37
	Parbatipur . .	0·26	0 04	..	0 47	0 22	..	0 35
	Patnitola .. .	0 65	..	0 29	0 08	0 29	.	
	Sapahar ..	..	0 25	0 39	0 11	0·25	.	0 05
Jalpaiguri ..	Jalpaiguri (Obsy.) ..	0·96	0 77	0·26	0 05	3 70	0 05	0 82
	Alipur Duars . ..	0·22	0 85	0 46		3 42	2 34	5 09
	Falakata	0 11	0 38	0 47	1 20	0 90	0 48	3 30
	Debiganj	3·57	0 69	1·65	0 02	0 40	0 35	
	Buxa*							
	Kalchini	0 24	1 91	0 06	2 07	1 58	0 96	2 62
	Kumargram*							
Darjeeling ..	Siliguri	0 42	0 08		2 46		1 24	.
	Darjeeling (Obsy.) ..	2·25	0·55	0·05	0·19	0 58	0 21	0 03
	Kalimpong (Obsy.) ..	1 08	0 91	0 01	0 02			0 03
	Mongpoo	2 10	2 92	0 03	0 59	0 16	0 09	0 05
	Kurseong	1 36	1·44	0·04	0·05	0 22	0·03	0 21
	Pedong	1 39	1·02	0·04	0 15	0 26	0 01	
Rangpur ..	Bhawanigan] (Gaibandha) ..	0·03	..	0 50	.	0 10	..	..
	Rangpur (Obsy.) ..	1 12	0·76	0 55	0 05	0·09	.	0 08
	Pirganj	0·95	0 36	..			.	
	Kurigaon	0·29	1·65	0·36	0 13	1·45	..	..
	Gobindganj	.	.	.		.	..	.
	Bagdogra (Nilphamari) ..	2 37	0 45	0·11		0 05		2 11
	Ulipur	1 63	0 30	2 16	0 50	0·45	.	..
	Sunderganj	..	0 85	0·64	0 21	0·31	0·12	.
	Saidpur	0·70	0·64	..	0 22	0 05		2·02
Bogra .	Sherpur	0·08	0·42	..	1·62	0·39	..	.
	Nowkhilla	0 16	.	0 84	0 50	.	.	.
	Bogra (Obsy.)	.	0 62	..	1 07	0 41	.	..
	Panchbibi	0·22	0·34	..	0 40	0·24	0 15	.
	Khetlal	.	0·05	0·15	0·10	..	..	..
	Adamdighi	0 50		0 58	0 40	..		.
	Dubchanchia	..	0·32	0·50	..	..	0·66	..
Pabna ..	Shazadpur	1 02	0 10	0 47	0 26	0 05	0 19	..
	Pabna	.	..	0·11	1 21	0 85	0 62	..
	Sirajganj (Obsy.) . ..	..	1 21	0 05	1 05	0·26	0 05	..
	Iswardi	..	0 70	0·03	0 58	0 55	0 18	..
Malda ..	Malda (Obsy.)	.	0 26	.	0 77	0 08	0 25	0 19
	Chanchal	1·86	..	1·14	0·07	0·33	0 61	0 25
	Gazol	0 50	0 65	0 22	0 20	..		..
	Sibganj	.	0 20	.	..	.		.
	Gomastapur	..	0·21	0·54	..	0·10	0·18	0 38
	Nawabganj	0 14	0 17	0 41	0 10	0·45	0 35	..
Dacca.								
Dacca	Munshiganj . ..	..	..	0 60	1 53	0 70	0 35	.
	Dacca .. .	0·04	0·55	0·52	1 57	0 34	0·84	.
	Nawabganj	..	0·42	..	1 70	0 61	1·53	4·10
	Narayanganj (Obsy.) .	.	0 04	0 44	1 80	0 40	0 37	.
	Narsingdi	0·90	4 35	1 00		0·15	.	0 15
	Manikganj	0·31		.	1 17	0 60	..	
..	Joydebpur	2 32	0 06	1·07	0 16	0 12	.	0·50
	Kapasia	.	2·50	0 28	0 77	0 27	..	

* Not reported.

FOR THE MONTH OF JUNE 1936.

8	9	10	11	12	13	14	15	16	17	18	19	20
..	..	..	..	0·30	0·17	0·70	0·12	0·74	..	..	..	0·23
..	..	..	..	0·06	..	..	..	..	0·04	0·06	..	0·25
..	0·30	..	..	0·39	..	0·08	..	..	0·27	..	..	..
..	..	..	..	0·46	0·19	0·23	0·52	0·17	..	..	0·05	0·34
..	..	..	..	..	0·10	..	0·50	0·50	1·40	..	..	0·20
0·29	..	..	0·03	0·16	1·02	0·06	..	0·61	0·17	0·29	..	..
..	..	..	..	0·21	0·05	1·45	0·22	0·48	0·36	..	..	..
1·83	..	..	..	..	..	..	0·45	0·79	0·02	..	2·09	0·32
0·10	..	..	..	0·09	0·09	0·07	..	1·26	..	..	1·53	0·46
0·50	3·50	..	..	..	..	0·50	1·50	1·20	..	..	..	5·50
..	..	..	..	..	..	..	1·10	0·16	0·43	0·71	2·30	2·50
..	..	0·37	0·94	..	..	0·50	0·30	0·50	..	0·20	0·04	..
..	..	..	0·51	0·57	..	..	0·32	0·80	..	0·31	..	..
..	..	..	..	..	0·67	0·30	..	1·11	..	..	..	..
2·66	..	0·09	..	2·20	0·01	0·39	0·55	0·58	0·59	0·12	7·95	3·23
0·82	..	0·89	..	0·96	..	0·48	0·06	0·28	0·22	0·64	0·12	6·12
1·40	..	..	..	0·80	0·04	0·70	0·60	0·70	..	..	1·45	3·75
3·75	..	..	..	..	..	..	0·05	0·23	0·17	..	2·07	0·71
0·18	..	0·33	0·01	0·23	..	0·07	..	0·76	0·46	0·28	4·11	2·85
0·65	..	..	1·92	0·32	0·21	0·12	0·24	0·17	0·19	3·82	4·15	..
0·02	0·24	0·11	0·20	0·51	0·10	1·64	0·65	0·25	0·80	0·39	0·63	0·85
..	2·17	..	..	0·59	0·13	1·18	1·01	0·09	0·63	0·01	0·36	0·23
0·06	1·81	0·34	0·44	0·62	0·02	1·02	0·93	0·30	0·81	0·04	0·50	1·75
..	0·88	0·90	0·04	1·39	..	0·53	0·85	0·67	0·54	0·31	1·50	1·16
..	1·43	0·26	..	0·87	0·27	0·37	0·65	0·42	0·41	0·15	1·23	0·63
..	..	..	..	..	1·05	..	0·10	0·28	0·20	..	..	0·33
0·76	..	0·02	..	0·30	0·25	..	0·58	1·73	0·02	..	0·03	..
..	..	..	..	..	..	0·30	..	..	0·25	0·95	..	..
2·85	..	..	..	..	0·03	0·15	0·05	0·58	0·25	0·22	0·33	0·78
..	..	..	..	0·15	..	0·50	..	0·49	..	0·30	..	..
..	..	0·21	..	..	..	0·19	0·95	0·26	..	0·36	0·30	3·51
1·26	..	..	..	..	0·70	..	..	1·36	0·64	..	0·35	0·20
0·60	0·40	..	..	0·38	0·60	..	1·60	0·67	0·92	..	0·90	..
..	..	..	..	..	..	0·11	0·41	..	0·09	..	0·48	..
..	..	..	0·15	1·80	..	..	0·10	0·36	0·22	..	..	0·44
0·79	..	..	..	0·06	..	0·46	0·57	0·32	0·33	..	0·26	0·40
..	..	..	0·19	..	0·16	..	..	0·15	0·13	..	..	0·92
..	..	..	..	0·46	0·63	..	..	..	..	..	0·40	0·13
..	..	..	..	..	0·05	0·23	..	..	0·35	..	..	..
..	..	..	0·15	0·16	0·17	0·16	0·16	..	0·70	..	..	..
..	..	..	..	..	1·14	0·14	..	..	..	0·21	..	0·18
1·91	..	1·80	0·16	0·10	0·08	0·32	0·21	..	..	..	..	0·76
..	0·17	..	1·15	0·22	0·06	0·99	1·11	0·15	0·11	0·27	0·07	0·03
..	1·98	..	0·61	..	0·86	..	0·15	1·31	0·12	..	..	0·08
..	0·12	..	0·58	0·90	0·22	1·42	0·90	0·03	..	0·30	..	..
0·05	..	..	..	0·02	0·42	0·18	0·28	0·16	0·13	0·03	..	..
..	..	..	..	0·35	..	..	..	0·50	0·82	..	..	..
..	..	..	..	0·28	..	0·22	..	..	..	..	..	..
..	..	..	..	0·50	0·50	..	..	0·80	..	..	..	..
..	..	..	..	..	1·41	0·34	0·13	..	..	..	..	..
..	..	..	0·05	0·02	0·21	0·06	0·08	0·03	..	..	..	0·43
..	1·20	..	..	..	0·80	0·30	0·50	1·07	0·70	..	..	..
0·10	0·62	..	..	0·10	0·42	0·35	0·18	0·50	0·56	..	1·45	..
..	..	..	..	..	0·80	0·27	..	0·83	1·40	..	..	..
0·07	0·26	0·03	0·01	0·05	0·70	0·23	0·26	0·65	1·54	..	..	0·03
1·70	..	..	0·10	..	..	..	0·15	1·15	..	..	..	0·40
..	1·70	..	..	..	0·05	0·17	0·55	0·25	..	..	..	..
4·21	..	0·14	0·02	0·70	0·11	..	0·07	0·79	..	..	0·02	0·05
2·05	0·33	..	..	..	0·12	0·23	0·23	..	1·02	..	..	..

DAILY RAINFALL RECORDED IN BENGAL

Division and district.	Station.	21	22	23	24	25	26	27
Rajshahi.								
Dinajpur ..	Nithpur	..	..	..	0·21	0·12	..	..
	Nawabganj	..	..	..	..	..	0·55	..
	Gangarampur	..	..	..	..	..	..	..
	Itahar	..	0·18	0·44	..	..	0·26	..
	Raiganj	..	..	0·85	..	..	..	0·20
	Dinajpur (Obsy.)	1·89	..	..	0·43	..	..	0·04
	Balurghat	0·09	..	0·05	0·10	0 25	..	1·77
	Thakurgaon	0·40	..	..	..	..	..	..
	Setabganj	0·42	..	..	..	..	..	..
	Ramganj*							
	Atwari	..	..	1·15	1·00	..	..	..
	Birganj	..	0·08	0·56	..	..	..	..
	Parbatipur	..	0·60	2·37	..	..	..	..
	Patnitola	..	..	..	..	..	..	..
	Sapahar	..	..	..	..	..	..	0·85
Jalpaiguri ..	Jalpaiguri (Obsy.) ..	0·05	0·74	3·93	5·54	1·31	0·01	0·06
	Alipur Duars	1·18	1·62	0·65	0 18	0·72	0·05	1·12
	Falakata	0·10	2·08	1·22	..	..	..	.
	Debiganj	..	..	0·05	0·49	..	..	..
	Buxa*							
	Kalchini	0·56	0·79	3·54	0·89	0·21	0 34	..
	Kumargram*							
Darjeeling ..	Siliguri	1·32	0·67	2·38	1·57			..
	Darjeeling (Obsy.) ..	0·08	0·05	0·15	1·22	0·20	0 45	..
	Kalimpong (Obsy.) ..	0·24	0·08	0·48	1·14	..	.	..
	Mongpoo	0 10	0·11	0·25	0 63	0·42		..
	Kurseong	0·29	0·42	0·33	0·77	0·10	0·63	0·17
	Pedong	0·07	0·15	0·92	0·85	0·14	0·24	0·03
Rangpur ..	Bhawaniganj (Gaibandha) ..	0·22	..	..	0·10	0·08	..	1·30
	Rangpur (Obsy.)	0·03	..	..	0·90	..	..	..
	Pirganj	..	..	..	..	..	0 40	.
	Kurigaon	0·35	0·03	0·05	0·10	..	..	..
	Gobindganj	0·30	0·80	..	0·40	0·30	..	0·50
	Bagdogra (Nilphamari) ..	0 24	0·04	1·07	..	..	..	..
	Ulipur	..	..	..	1·45	..	..	..
	Sunderganj	..	..	0·40	..	..	..	..
	Saidpur	..	0·93	0·18	..	..	..	..
Bogra ..	Sherpur	0·10	0·37	..	..	..	..	0·18
	Nowkhilla	..	..	..	..	0·36	0·06	0·78
	Bogra (Obsy.)	0·62	0·17	0·07	..	0·05	..	0·13
	Panchbibi	0·18	..	0·07	..	.. .	3·13	..
	Khetlal	..	..	..	..	.. ..	..	0·35
	Adamdighi	..	..	..	..	..	..	..
	Dubchanchia	0·36	..	..	..	..	..	..
Pabna ..	Shazadpur	..	..	..	..	..	..	0·24
	Pabna	0·19	0·11	..	..	0 26	0·04	..
	Sirajganj (Obsy.)	0·29	..	..	..	..	..	0·17
	Iswardi	1·84	..	0·55	0·02	0·06	..	..
Malda ..	Malda (Obsy.)	0·10	..	0·05	0·31	..	..	..
	Chanchal	1·13	2·70	..	..	..	..	0·25
	Gazol	..	..	0·50	0·15	..	..	0·05
	Sibganj	..	..	..	0·30	0·35	..	..
	Gomastapur	1·00	0·09	..	..	..	0·28	..
	Nawabganj	0·12	0·03	0·04	..	0·07	..	..
Dacca.								
Dacca ..	Munshiganj	..	2·35	1·36	..	..	..	..
	Dacca	0·11	0·72	0·04	0·19	..	..	..
	Nawabganj	1·54	..	..	..	0·10	..	..
	Narayanganj (Obsy.) ..	0·05	1·73	..	0·04	0·03	..	..
	Narsingdi	0·82	..	..	..	0·36	0·32	..
	Manikganj	0·90	..	..	0·12	..	..	..
..	Joydebpur	0·34	..	0·05	0·09	..	0 28	0 20
	Kapasia	0·76	2·03	0·67	0·34	0·40	1·01	1·10

* Not reported.

FOR THE MONTH OF JUNE 1936.

28	29	30		Number of rainy days.	Average number of rainy days.	Total rainfall for the month.	Normal rainfall for the month.	Heaviest rainfall during the month.	Total rainfall from 1st to 30th June 1936.	Normal rainfall from 1st to 30th June 1936.
..	..	0·13		13	11 1	3·82	11·27	0·74	3 82	11·27
..	..	..		3	13·4	2·27	15·13	1·00	2·27	15 13
0·11	..	..		7	13·2	3·09	12·91	0·91	3·09	12·91
0·08	0·27	..		13	11·9	4·54	11·56	0·52	4·54	11·56
..	..	..		9	12 1	6·45	12·77	1·90	6·45	12·77
..	0·08	..		12	14·1	7·83	14 05	1·89	7·83	14 05
0·11	0·72	0·02		13	13·2	7·66	11·98	1·77	7·66	11·98
..	..	..		9	13·9	10·39	17·00	2·50	10·39	17·00
0 04	0·03	..		8	13·1	6·15	15·12	1·53	6·15	15·12
					14·2		16·00			16·00
..	..	..		12	15·4	19·43	20·85	5·50	19·43	20·85
..	..	..		11	14 6	10·24	16·60	2 50	10·24	16·60
..	..	..		12	14 8	7·16	14·71	2·37	7·16	14·71
0·20	..	0·25		10	(*n*)	4·27	(*n*)	0·80	4·27	(*n*)
..	..	0·35		9	(*n*)	4·33	(*n*)	1·11	4·33	(*n*)
0·30	0·30	0·11		21	17·9	37·32	23·73	7·95	37·32	23·73
0·82	0·26	0·05		23	17·6	29·62	30·66	6·12	29 62	30·66
..	0·35	0·30		19	16·7	20·33	23·86	3·75	20·33	23·86
0·07	0·44	0·66		13	16·3	15·37	19·95	3·75	15·37	19·95
					22·7		39·00			39·00
0·04	0 27	0 18		22	20 6	25·54	28·73	4 11	25 54	28 73
					19·5		32·91			32·91
0 68	0·44	..		19	19·7	23·05	25·40	4 15	23 05	25·40
0·05	3·10	0 10		23	20·8	15·65	24·26	3·10	15·65	24·26
0 01	2·50	0·37		15	16·9	13·27	17·48	2·50	13·27	17 48
0·27	5·34	0 07		21	20 0	21·77	26·06	5·34	21·77	26·06
0·46	0·94	0·29		24	22·5	16·52	32·87	1·50	16·52	22·87
0·34	1 47	1·31		23	22·8	15·08	19·70	1·47	15·08	19·70
..	0·07	..		10	14·3	4·36	15·47	1·30	4·36	15·47
0·02	..	..		9	16·0	7·29	17·61	1·73	7·29	17·61
..	..	..		6	13·7	3·21	16·52	0 95	3·21	16·52
0·20	0·25	0 16		17	15·7	10·28	22·20	2·87	10·28	22 29
..	0·40	0 30		11	14·0	4·44	14·31	0·80	4·44	14·31
0·24	..	..		14	15·5	12·46	19·85	3 51	12·46	19 85
..	0·05	..		12	15·2	11·05	18·95	2·16	11·05	18·95
1·00	..	..		15	13·9	9·60	15·88	1·60	9 60	15·88
..	..	..		9	13·9	5·83	15·90	2·02	5·83	15·90
0 75	0·15	0·10		15	13·4	7·23	11·78	1·80	7·23	11·78
..	0·16	..		13	13·5	6·05	13 43	0·84	6·05	13·48
..	..	0·31		12	14·7	5·00	14·03	1·07	5·00	14·03
0·40	..	..		12	12·6	6·75	11·90	3·13	6 75	11·90
0·10	0·05	0·02		6	13·7	1·45	8 45	0·35	1·45	8·45
0·18	0·15	..		11	(*n*)	3·31	(*n*)	0 70	3 31	(*n*)
..	..	0·28		9	(*n*)	3·79	(*n*)	1·14	3·79	(*n*)
0·16	0·98	..		15	12·4	8·81	10·60	1·91	8·81	10·60
0·07	0 11	0·39		17	13·9	8·29	11·33	1·21	8·29	11·33
0·85	1·25	0·28		14	14·7	10·57	12·41	1·98	10·57	12·41
0·35	0·15	0·62		16	13·5	10·10	10·96	1·84	10 10	10·96
0·02	..	0·20		12	11·6	3·50	10·35	0·77	3 50	10·35
..	..	..		11	11·6	10·01	11·37	2·70	10·01	11·37
..	0·38	..		9	11·7	3·15	10·36	0·65	3 15	10·36
..	0 25	..		7	11·6	2·90	9·72	0 80	2 90	9·72
..	..	0·12		11	10·9	4·74	10·48	1·41	4 74	10·48
0·19	0·11	..		11	11·4	3·07	11·78	0·45	3·07	11·78
0·87	0·85	0 10		15	15·8	13·28	14·50	2·35	13·28	14·50
0·58	1 22	0 48		20	15·3	11·48	13·56	1·57	11 48	13 56
..	0 42	0·25		13	13·3	13·97	15·52	4·10	13·97	15·52
0·78	1·00	0·28		14	14·8	10·79	12·95	1·80	10·79	12 95
0·32	..	..		14	14·8	11·87	14·02	4·35	11 87	14·02
0·66	0·45	0·35		12	13·7	7·28	11·54	1·70	7·28	11·54
..	1 27	..		14	15·5	12·63	14·04	4·21	12·63	14·04
1·58	0·09	..		18	15·9	21·74	15·13	6·33	21·74	15·13

(*n*) Not ascertained.

DAILY RAINFALL RECORDED IN BENGAL

Division and district.	Station.	1	2	3	4	5	6	7
Dacca—*concld.*								
Mymensingh ..	Kishorganj	1·42	1·01	0·14	1·65	0·08	..	..
	Atia (Tangail)	0·76	..	0·56	0·16	0·17	0·13	..
	Sarisabari	0·80	0·20	0·82	..	..	..	..
	Mymensingh (Obsy.) ..	0·40	2·17	0·07	1·01	1·09	0·04	0·20
	Jamalpur	0·18	0·09	0·56	0·12	0·19	..	..
	Netrokona	0·13	1·72	0·62	0·62	..	0·03	0·17
	Pingna	..	0·51	0·08	0·71	0·48	..	..
	Durgapur	..	..	1·85	1·42	..	0·28	2·30
	Sherpur (Town)	..	0·24	0·47	..	..	..	..
	Dewanganj	0·35	0·75	0·13	0·10	..	..	0·75
	Nalitabari	..	..	0·91	0·22	0·05	..	..
Faridpur ..	Madaripur	..	0·19	..	..	0·52	..	..
	Faridpur (Obsy.)	..	..	0·05	1·16	0·63	0·15	..
	Rajbari (Goalundo) ..	..	0·09	..	1·36	0·69	0·24	..
	Haridaspur	..	..	0·02	1·68	..	..	..
	Takerhat	0·06	..	..	0·81	..	..	0·50
	Bhanga	..	..	..	1·25	..	0·15	0·06
	Pangsa	..	0·05	0·70	0·72	0·47	..	..
	Baliakandi	..	..	..	1·12	0·60	0·09	..
	Bhusna	0·30	..	..	0·23	0·91	0 03	..
	Palong	..	..	..	..	0·70	..	..
Bakarganj ..	Patuakhali	..	1·76	..	2·72	2·18	..	..
	Barguna	..	..	..	..	1·10	0·50	..
	Pirojpur	..	..	..	..	6 81	..	..
	Barisal (Obsy.) ..	.	0·31	..	..	0·69	0 01	..
	Gaurnadi	..	..	..	0·32	..	..	0·93
	Bhola	..	0·42	..	0·62	0 57	0·03	..
	Daulatkhan	..	1·45	0·35	0·15	0·08	.	.
	Bauphal . ..	1·12	0·48	0·37	1·19	0·18	0·22	0·15
Chittagong.								
Chittagong ..	Cox's Bazar (Obsy.) ..	..	7·20	3·93	4·80	2·06	1·96	0·22
	Chittagong (Obsy.) ..	..	4·88	0·98	3·45	0·63	0·30	0·08
	Kutubdia	..	11·98	2·60	1·74	2·95	..	0·20
	Satkania	0·47	0·31	..	..	..	0·75	0 50
	Mirsarai	2·30	2·30	2·00	1·05	0·15	..	0·10
	Rangunia	1·80	..	5·20	0·10	0·62	0·09	.
Tippera ..	Comilla (Obsy.)	..	0·28	0·02	1·62	0·02	0 30	..
	Chandpur	..	..	..	0·08	0·85	0·10	..
	Brahmanbaria	0·50	2·42	..	2·00	0 15	0·40	..
	Ramchandrapur	0·60	0 40	..	1 00	0·15	..	1·05
	Nasirnagar	2·50	..	1·40	0·80	..	0·50	..
	Daudkandi	0·60	0·45	..	..	1·15	..	0·85
	Kasba	..	..	..	..	1·05	0·83	..
	Laksam	0·70	..	0·64	..	..	..	..
Noakhali ..	Noakhali (Obsy.)	..	2·02	1·57	0·20	0 26	0·11	..
	Feni	..	0·60	0·50	..	0·20	0·25	..
	Harishpur	2·52	1·52	0·42	..	0·25	2·55	0·08
	Ramganj	0·50	..	..	..	..	..	..
	Chhagalnaya	..	0·55	1·30	0·10	0·10	..	0·15
	Hatiya	5·06	..	0·80	1·35	0·75	0·10	0·08
	Lakhmipur	..	0·70	..	..	..	..	..
Chittagong Hill Tracts.	Rangamati	0·10	2·29	0·15	1·12	0·11	0·50	0·12
	Bandarban	1·25	0·73	0·50	0·30	0·10	0·30	0·20
	Barkal	..	2·50	0·11	2·30	0·15	0 38	0·28
	Mahalchari	0·05	0·84	0·36	0·35	0 04	0·21	..
	Lama	0·25	3·17	3·25	2·14	0·75	0·66	.
	Ramgarh	..	1·04	0·83	0·21	0·26	..	0·09
	Manikseri	1·50	0·08	0·71	..	0·50	..	..
	Dighinala	0·53	0·68	0·19	3·15	0·25	0·30	0·32
	Mainmukhi	0·58	0·20	0·66	0·03	0·03	..	0·25
	Kaptai	2·60	0·76	4·38	0·67	0·45	0·10	0 13
	Panchhari	0·73	1 33	0·69	4·00	0·14	..	..
	Nakhyongchhari	0·07	7·03	1·86	6·31	1·20	0·12	1·36
Tripura State ..	Agartala	0·89	0·09	3·26	0·09	0·29	0·14	..
Cooch Behar ..	Dinhata	2·48	0·78	1·28	0·05	1·28	0 12	0·02
	Cooch Behar (Obsy.) ..	0·44	1·46	1·86	..	4·86	1·41	4·85
	Mekliganj	1·12	0·57	0·43	0·28	1·53	0·99	0·75
	Mathabhanga	0·50	1·29	1·26	0·18	4·00	2·18	1·23
	Fulbaria (Tufanganj) ..	0·41	1·97	3 31	0·02	2 55	0·27	3·23

FOR THE MONTH OF JUNE 1936.

8	9	10	11	12	13	14	15	16	17	18	19	20
1·61	0·19	..	0·64	..	0·65	0·03	0·02	..	1·25	1·05	..	0·04
4·00	..	1·64	0·17	0·47	..	0·11	0·46	0·36	0·28	..	..	1·04
1·92	..	..	..	..	0·16	0·62	0·93	0·85	..	..	0·20	1·30
0·12	0·30	..	..	0·01	0·87	0·12	0·30	0·40	0·11	0·30	0·10	1·13
..	..	..	..	..	0·57	0·41	0·04	0·16	0·31	..	..	0·28
1·70	3·70	1·68	..	0·08	0·70	0·57	..	0·21	0·30	0·66	0·06	0·51
0·20	3·33	..	0·03	..	0·31	..	0·78	0·50	0·09	..	..	0·18
0·06	..	..	0·26	0·28	0·20	0·38	0·50	1·00	0·20	..	3·97	1·30
0·96	0·11	..	..	..	0·58	..	1·20	..	1·80	..	..	1·10
..	0·05	..	..	0·68	..	..	0·60	0·12	..	..	1·40	0·87
2·92	..	..	..	..	0·71	..	0·21	1·03	0·58	..	..	2·77
..	..	..	0·13	0·93	0·05	0·76	0·42	0·15	0·79	..	..	..
..	1·23	0·01	..	0·23	0·04	2·20	0·78	1·28	0·65	0·04	0·01	0·02
..	0·60	0·11	0·05	0·31	0·05	0·63	0·35	0·13	0·07	0·19	0·21	..
..	..	..	0·24	0·74	0·76	1·04	1·31	0·06	..	0·63	..	..
0·02	..	..	0·70	0·31	0·38	0·14	1·38	0·88	..	..	0·07	..
..	..	0·25	1·16	0·63	0·50	0·84	0·50	0·40	..	..	..	..
0·20	..	0·23	0·43	0·05	1·35	1·47	0·47	0·03	0·50	0·07	..	0·05
..	0·03	0·02	..	0·55	0·10	1·41	1·75	0·49	0·39	0·39	0·80	0·26
..	0·26	..	0·50	0·21	0·15	0·10	2·01	0·57	..	..	0·14	0·09
0·10	0·40	0·60	..	..	0·50	1·00	1·08	0·40	0·96	0·17	1·20	..
1·36	..	0·38	1·55	3·32	2·42	0·87	1·42	1·05	0·19	0·24	..	..
..	1·00	..	1·00	0·50	1·10	0·60	..	1·00	..	..	..	..
..	2·34	..	0·05	2·40	1·69	3·61	0·86	3·03	0·21	0·14	..	0·41
0·35	0·06	0·93	0·55	0·48	1·24	0·48	1·83	0·49	0·10	..	..	0·03
0·50	..	0·07	0·52	0·80	0·29	..	0·05	0·04	..	..	..	..
0·04	0·02	..	0·01	0·39	0·96	0·21	0·54	1·31	0·63	0·04	..	0·04
0·09	0·11	0·23	..	..	1·30	0·65	1·40	0·05	1·06	0·05	..	..
0·24	0·47	0·48	1·07	2·14	1·92	1·02	1·22	1·35	1·52	..	0·14	0·37
0·14	0·20	..	0·70	0·33	0·78	0·52	1·26	0·74	..	..	..	0·04
..	..	..	0·09	0·21	0·19	0·36	0·20	0·50	0·01	0·24	..	0·03
..	1·37	0·48	..	0·55	0·86	0·32	0·22	0·32	..	..	..	..
1·25	0·60	0·65	..	..	..	0·20	0·75	0·10	0·10	..	..	..
0·22	..	0·30	0·26	..	0·15	..	..	..	1·15	..	0·10	..
..	0·70	..	0·73	0·28	..	..	0·73	0·13	0·05	0·07	0·26	..
0·02	0·53	..	..	1·24	0·09	0·10	0·16	0·31	1·39	0·01	..	0·58
0·29	0·27	0·12	0·10	0·21	0·75	0·20	1·45	1·35	0·35	0·02	..	0·02
0·78	..	1·90	0·32	..	..	0·40	0·97	0·12	0·87	..	0·24	0·52
..	0·60	0·50	1·60	0·40	0·50	0·15	0·10	..	0·25	..	..	..
0·60	0·90	1·00	..	..	..	0·45	0·35	..	0·20	0·75	0·25	..
0·20	..	0·55	1·97	2·03	0·98	1·22	1·10	..	..	..	..	..
1·05	2·15	..	..	..	1·60	..	1·30	0·60	..	0·95	1·80	1·60
1·50	..	..	..	0·48	0·20	0·30	0·30	1·78	0·04	0·10	0·15	0·12
0·58	0·22	0·30	0·04	0·15	2·08	0·72	0·48	0·09	2·40	0·08	..	..
1·19	0·05	0·30	0·20	..	0·12	0·22	0·12	0·10	..	0·10	..	..
..	..	..	0·07	0·19	0·69	0·72	..	0·19	0·28	0·19	0·55	0·40
..	2·00	..	..	2·00	1·30	1·50	..	1·20	..	0·17	..	..
0·35	..	0·50	0·30	0·02	0·03	0·30	0·20	0·80	0·15	..	0·15	0·06
0·06	0·14	..	..	..	3·70	0·30	1·04	0·30	0·52	0·20	..	..
..	..	..	2·40	..	0·48	..	1·30	..	1·90	..	..	..
..	..	0·10	0·09	1·75	0·24	0·03	0·17	0·45	0·16	0·35	0·08	..
0·04	0·59	0·30	0·10	0·05	0·08	0·09	0·06	0·40	0·40	0·60	0·54	0·13
0·06	..	0·33	..	0·16	..	..	0·05	0·70	0·10	0·60	..	..
..	..	0·10	0·32	0·73	0·28	..	0·58	0·17	0·03	0·98	..	1·18
..	..	1·18	0·35	0·65	..	0·75	..	..	0·19	1·23	1·35	0·66
..	..	0·37	0·23	0·13	0·26	0·99	..	0·09	1·25	..	..	..
..	..	0·10	0·15	0·18	0·11	0·32	0·35	0·31	0·50	0·15	0·35	..
..	0·10	0·62	..	0·06	0·30	..	0·68	0·32	0·14	..	..	..
..	0·03	0·45	0·05	0·34	0·06	0·20	0·63	..	0·15	..	0·30	0·80
..	0·18	0·36	0·30	0·20	0·06	0·12	0·02	0·37	..	..	..	1·70
..	..	0·16	0·62	0·56	0·43	..	1·52	0·20	0·06	..	..	0·55
..	1·55	..	..	0·80	1·09	1·04	1·48	0·31	0·11	0·09	..	0·35
0·72	0·05	1·40	0·85	0·14	..	0·29	0·78	0·41	0·19	..	1·19	..
2·58	..	..	0·18	..	..	0·02	0·90	0·40	0·70	0·50	0·12	1·55
0·65	..	..	..	1·17	..	0·22	0·13	1·07	0·71	0·21	3·39	6·75
3·22	..	..	..	1·09	..	0·53	0·42	0·33	0·26	..	1·60	** 2·30
0·16	..	..	..	0·70	..	0·47	0·18	0·27	0·43	0·10	1·30	3·73
4·89	..	..	..	1·05	..	0·49	0·06	0·67	0·94	..	0·66	0·95

DAILY RAINFALL RECORDED IN BENGAL

Division and district.	Station.	21	22	23	24	25	26	27
Dacca—*contd.*								
Mymensingh ..	Kishoreganj	0·31	..	0·95	0·68	0·03	..	0·04
	Atia (Tangail) ..	..	..	..	..	..	..	0·28
	Sarisabari	..	..	..	0·26	0·12	0·20	..
	Mymensingh (Obsy.) ..	1·49	0·04	..	..	..	..	..
	Jamalpur	1·56	0·12	0·17	0·07	..	..	..
	Netrokona	3·27	0·02	..	0·45	0·02	..	0·14
	Pingna	0·20	..	0·18	..	0·21	..	0·13
	Durgapur	0·31	..	..	..	0·07	0·50	..
	Sherpur (Town)	1·18	..	0·25	..	..	..	..
	Dewanganj	0·66	..	..	0·15	..	0·39	..
	Nalitabari	1·76	..	0·69	0·35	..	..	0·03
Faridpur ..	Madaripur	..	0·18	..	0·82	0·53	0·16	..
	Faridpur (Obsy.)	0·67	0·02	..	0·16	0·03	..	..
	Rajbari (Goalundo) ..	0·14	0·03	0·22	..	..	..	..
	Haridaspur	0·01	..	0·20	0·01	..	..	0·21
	Takerhat	0·06	..	1·72	..	0·06	0·02	0·05
	Bhanga	2·00	..	0·95	0·20	..	..	..
	Pangsa	0·05	0·05	0·04	..	..	..	0·30
	Baliakandi	0·03	0·08	0·58	..	0·04	0·05	..
	Bhusna	..	..	..	..	0·26	0·15	0·10
	Palong	..	0·40	0·32	0·20	0·30	0·10	..
Bakarganj ..	Patuakhali	..	0·06	0·08	0·23	0·92	0·38	0·09
	Barguna	0·10	..	0·11	0·14	0·70	..	..
	Pirojpur	..	0·03	..	0·37	3·07	0·47	..
	Barisal (Obsy.)	0·12	0·05	..	0·59	0·35	..	..
	Gaurnadi	0·67	0·20	0·22	..	..	..	..
	Bhola	1·24	0·05	..	1·15	0·06	0·16	0·06
	Daulatkhan	0·15	0·12	..	..	0·13	0·35	0·14
	Bauphal	..	1·36	..	..	..	..	..
Chittagong.								
Chittagong ..	Cox's Bazar (Obsy.) ..	1·01	..	0·06	0·04	0·11	0·18	0·02
	Chittagong (Obsy.) ..	2·55	0·07	..	0·25	0·01	0·08	..
	Kutubdia	0·60	..	..	..	..	..	..
	Satkania	0·25	0·65	0·05	0·08	..	..	..
	Mirsarai	2·40	1·00	..	..	..	..	..
	Rangunia ..	4·51	0·47	1·01	0·10	..	..	0·42
Tippera ..	Comilla (Obsy.)	0·04	3·23	0·75	..	0·31	..	0·07
	Chandpur	..	0·65	..	0·28	0 02	0·06	..
	Brahmanbaria	..	0·15	..	0·32	0·15	..	0·93
	Ramchandrapur	..	1·45	..	0·10	0·15	..	0·10
	Nasirnagar	0·27	..	..	0·23	1·00	..	0·50
	Daudkandi	1·35	..	..	..	..	0·21	1·20
	Kasba	2·40	..	0·90	0·35	2·60	..	..
	Laksam	0·16	0·12	1·40	0·38	..	..	..
Noakhali ..	Noakhali (Obsy). ..	..	0·24	0·19	0·48	..	0·52	..
	Feni	..	0·35	..	0·66	..	0·10	..
	Harishpur	0·12	0·50	..	0·50	0·19	0·42	..
	Ramganj	1·00	..	..	..	1·10	..	0·75
	Chhagalnaya	0·25	..	0·05	..	..	..	0·18
	Hatiya	..	..	..	..	..	..	..
	Lakhmipur	..	0·30	..	..	..	0·40	..
Chittagong Hill Tracts	Rangamati	0·96	0·03	0·06	1·32	0·56	0·15	..
	Bandarban	0·12	0·10	0·15	2·50	1·04	0·06	0·04
	Barkal	1·90	0·07	..	0·70	0·20	0·40	0·45
	Mahalchari	0·77	0·78	0·01	1·55	0·30	0·13	0·04
	Lama	..	0·85	1·28	..	..	..	..
	Ramgarh	0·95	0·56	0·11	0·77	..	..	..
	Manikseri	0·38	..	0·24	0·72	..	..	0·31
	Dighinala	..	..	0·10	0·60	..	0·22	0·51
	Mainmukh	0·02	0·03	0·83	..	0·54	1·49	0·12
	Kaptai	0·48	2·28	1·69	0·14	0·11	..	..
	Panchhari	0·47	0·45	0·09	..	1·85	0·15	0·12
	Nakhyongchari	0·04	0·37	0·05	..	0·06	0·22	..
Tripura State ..	Agartala	1·89	0·58	0·04	0·77	0·89	1·00	0·48
Cooch Behar ..	Dinhata	0·16	0·12	..	..	0·50	..	0·07
..	Cooch Behar (Obsy.) ..	0·14	0·04	0·82	0·12	0·64	..	0·36
	Mickliganj	0·47	0·06	2·93	0·11	0·62	0·11	..
	Mathabhanga	0·50	0·06	0·78	..	0·22	..	0·25
	Fulbaria (Tufanganj) ..	..	0·04	1·34	0·02	0·33	0·09	0·23

Dacca, the 22nd July 1936.

FOR THE MONTH OF JUNE 1936.

28	29	30		Number of rainy days.	Average number of rainy days.	Total rainfall for the month.	Normal rainfall for the month.	Heaviest rainfall during the month.	Total rainfall from 1st to 30th June 1936.	Normal rainfall from 1st to 30th June 1936.
..	0·96	0·41		15	16·9	13·16	19·29	1·65	13·16	19·29
0·72	0·38	..		17	13·2	11·69	12·00	4·00	11·69	12·00
0·20	0·10	..		15	15·0	8·68	13·09	1·92	8·68	13·09
..	0·30	..		17	18·2	10·57	18·71	2·17	10·57	18·71
..	0·08	0·31		13	15·5	5·22	15·36	1·56	5·22	15·36
..	0·27	..		18	19·5	17·63	23·66	3·70	17·63	23·66
0·05	0·23	0·42		15	14·2	8·62	13·75	3·33	8·62	13·75
0·10	..	..		16	18·4	14·98	26·99	3·97	14·98	26·99
..	..	0·57		11	16·2	8·46	15·35	1·80	8·46	15·35
..	..	..		13	13·9	7·00	16·23	1·40	7·00	16·23
..	0·13	0·09		12	17·0	12·65	21·71	2·92	12·65	21·71
..	0·49	0·14		14	15·4	6·26	13·12	0·93	6·26	13·12
..	0·55	0·20		13	15·4	10·11	13·36	2·20	10·11	13·36
0·07	0·08	0·48		14	14·5	6·10	12·30	1·36	6·10	12·30
0·28	0·28	0·04		11	16·3	7·51	13·25	1·68	7·51	13·25
0·44	1·00	0·07		11	17·5	8·67	17·41	1·72	8·67	17·41
0·54	0·40	..		14	17·4	9·43	13·98	2·00	9·43	13·98
0·20	0·83	0·02		13	16·7	8·28	15·17	1·47	8·28	15·17
0·02	0·18	0·37		14	16·6	9·35	15·01	1·75	9·35	15·01
0·15	0·07	0·50		16	15·8	6·73	12·89	2·01	6·73	12·89
..	0·08	0·22		17	17·8	8·73	18·74	1·20	8·73	18·74
..	1·73	1·00		18	17·9	23·95	21·94	3·32	23·95	21·94
0·35	0·65	0·05		14	18·1	8·90	21·70	1·10	8·90	21·70
0·11	2·47	0·17		16	16·4	28·24	15·29	6·81	28·24	15·29
0·30	0·64	0·49		17	17·2	10·09	16·33	1·83	10·09	16·33
0·37	0·40	..		11	15·5	5·38	13·77	0·93	5·38	13·77
0·05	1·60	0·23		14	17·9	10·43	18·68	1·60	10·43	18·68
..	..	0·08		14	18·1	7·94	21·22	1·45	7·94	21·22
1·22	0·16	..		22	17·1	18·79	18·08	2·14	18·79	18·08
0·04	1·00	0·76		19	19·1	28·10	30·14	7·20	28·10	30·14
..	..	0·03		13	16·6	15·14	20·79	4·88	15·14	20·79
..	..	1·12		14	16·8	25·31	24·24	11·98	25·31	24·24
..	..	..		13	17·3	6·71	20·41	1·25	6·71	20·41
..	..	..		14	17·9	13·48	23·38	2·40	13·48	23·38
..	0·02	..		15	(*n*)	17·29	(*n*)	5·20	17·29	(*n*)
0·01	0·20	..		14	17·5	11·28	18·05	3·23	11·28	18·05
0·03	2·17	0·12		16	16·9	9·49	15·57	2·17	9·49	15·57
0·46	1·10	..		19	15·8	13·80	15·75	2·42	13·80	15·75
0·15	..	..		18	13·8	9·25	16·73	1·60	9·25	16·73
3·70	..	..		17	14·6	15·40	15·59	3·70	15·40	15·59
..	0·25	..		15	14·8	14·11	14·39	2·03	14·11	14·39
1·50	..	..		15	16·0	20·68	15·30	2·60	20·68	15·30
0·20	0·18	..		17	15·0	8·75	16·57	1·78	8·75	16·57
..	2·08	0·86		19	18·6	15·65	21·49	2·40	15·65	21·49
0·20	..	..		14	17·7	5·56	22·89	1·10	5·56	22·89
..	0·85	..		19	17·1	13·20	21·68	2·55	13·20	21·68
..	..	1·40		11	16·6	12·92	17·15	2·00	12·92	17·15
..	..	..		15	17·7	5·53	20·51	1·30	5·53	20·51
..	0·75	1·16		14	18·8	16·31	22·66	5·06	16·31	22·66
..	2·30	0·40		9	18·4	10·18	20·80	2·40	10·18	20·80
0·45	0·03	..		19	19·7	11·37	17·85	2·29	11·37	17·85
0·05	0·25	..		21	19·3	10·67	20·07	2·50	10·67	20·07
0·90	0·40	0·30		19	20·9	13·04	18·64	2·50	13·04	18·64
0·48	0·56	0·65		20	19·0	11·49	15·39	1·55	11·49	15·39
..	0·25	0·65		18	20·8	19·61	26·80	3·25	19·61	26·80
..	..	..		14	19·6	8·14	17·33	1·25	8·14	17·33
..	..	..		17	(*n*)	6·96	(*n*)	1·50	6·96	(*n*)
1·40	0·40	0·21		20	(*n*)	11·08	(*n*)	3·15	11·08	(*n*)
0·32	0·42	..		17	(*n*)	8·53	(*n*)	1·49	8·53	(*n*)
0·57	..	..		20	(*n*)	17·67	(*n*)	4·38	17·67	(*n*)
0·53	0·18	0·41		20	(*n*)	15·24	(*n*)	4·00	15·24	(*n*)
0·19	0·07	0·10		19	(*n*)	26·77	(*n*)	7·03	26·77	(*n*)
1·39	0·10	..		21	15·5	17·89	15·41	3·26	17·89	15·41
0·60	0·12	0·02		18	17·7	14·55	25·99	2·58	14·55	25·99
0·11	1·37	2·56		23	18·5	35·34	32·91	6·75	35·34	32·91
0·03	2·24	1·07		22	17·8	23·06	25·06	3·22	23·06	25·06
0·04	1·13	0·82		22	18·0	21·77	28·28	4·00	21·77	28·28
0·28	4·31	0·50		19	18·5	28·61	29·10	4·89	28·61	29·10

(*n*) Not ascertained.

S. ABDULLAH, for *Director of Agriculture, Bengal.*

IRRIGATION DEPARTMENT,

Statement showing heights above P. W. D. datum and low water in the rivers Ganges, Bhagirathi, Jalangi and Brahmaputra for the

Date.	River Ganges.													
	Mirzapur. Zero of gauge is 200·00 ft. above P. W. D. datum.		Benares. Zero of gauge is 197·05 ft. above P. W. D. datum.		Buxar.* Zero of gauge is 169·91 ft. above Bengal P. W. D. datum.		Dinapore. Zero of gauge is 135·51 ft. above P. W. D. datum.		Monghyr. Zero of gauge is at P. W. D. datum.		(A) Rajmahal. Zero of gauge is —2·00 ft.	
	Distance in miles.	From Allahabad, 86.	From Allahabad, 134.	From Mirzapur, 48.	From Benares, 90.		From Benares, 177.	From Buxar, 87.	From Benares, 287.	From Dinapore, 110.	From Benares, 407.	From Monghyr, 120.
	Highest guage reading.	2nd September 1916. 265·97 ft.	2nd September 1916. 244·55 ft.		7th September 1919. 203·40 ft.		21st August 1923. 172·41 ft.		8th September 1901 129·60 ft.		15th August 1913. 90·37 ft.	
	Lowest gauge reading.	11th April 1878. 198·92 ft.	20th May 1879. 191·70 ft.		15th May 1914. 161·65 ft.		26th April 1902. 136·11 ft.		2nd May 1914. 95·75 ft.		30th April 1936. 54·97 ft.	
		Height above zero of gauge.	Height above P. W. D. datum.	Height above zero of gauge.	Height above P. W. D. datum.	Height above zero of gauge.	Height above P. W. D. datum.	Height above zero of gauge.	Height above P. W. D. datum.	Height above zero of gauge.	Height above P. W. D. datum.	Height above zero of gauge.	Height above P. W. D. datum.
1	2	3	4	5	6	7	8	9	10	11	12	13	14
				Below zero.									
1st ..	..	11·42	211·42	2·50	194·55	0·83	170·74	9·80	145·31	102·80	102·80	62·10	60·10
2nd ..	..	11·58	211·58	2·08	194·97	0·92	170·83	9·90	145·41	103·00	103·00	62·90	60·90
3rd ..	..	12·00	212·00	1·25	195·80	1·00	170·91	11·00	146·51	103·40	103·40	63·60	61·60
4th ..	..	12·50	212·50	0·75	196·30	1·17	171·08	11·30	146·81	104·00	104·00	64·30	62·30
5th ..	..	12·17	212·17	0·25	196·80	0·67	170·58	11·50	147·01	104·80	104·80	65·20	63·20
6th ..	..	13·00	213·00	0·00	197·05	0·75	170·66	11·50	147·01	105·90	105·90	66·10	64·10
				Above zero.								Value of zero = 4·00 ft.	
7th ..	..	13·17	213·17	0·25	197·30	0·92	170·83	11·90	147·41	105·90	105·90	60·70	64·70
8th ..	..	13·42	213·42	0·75	197·80	2·25	172·16	11·60	147·11	105·90	105·90	60·75	64·75
9th ..	..	13·50	213·50	1·00	198·05	2·25	172·16	12·80	148·31	106·20	106·20	60·70	64·70
10th ..	..	13·75	213·75	1·00	198·05	2·50	172·41	13·30	148·31	106·50	106·50	60·70	64·70
11th ..	..	14·00	214·00	1·08	198·13	2·67	172·58	13·50	149·01	106·60	106·60	60·80	64·80
12th ..	..	14·50	214·50	1·50	198·55	3·25	173·16	14·20	149·71	106·40	106·40	61·00	65·00
13th ..	..	15·00	215·00	2·00	199·05	3·33	173·24	14·20	149·71	106·10	106·10	61·00	65·00
14th ..	..	15·00	215·00	2·25	199·30	3·50	173·41	13·30	148·81	105·90	105·90	60·90	64·90
15th ..	..	15·00	215·00	2·25	199·30	3·75	173·66	12·80	148·31	105·90	105·90	60·90	64·90
16th ..	..	14·92	214·92	2·25	199·30	4·00	173·91	13·00	148·51	105·80	105·80	60·90	64·90
17th ..	..	14·75	214·75	2·25	199·30	4·00	173·91	13·30	148·81	105·70	105·70	60·90	64·90
18th ..	..	14·50	214·50	2·00	199·05	4·00	173·91	13·50	149·01	106·20	106·20	60·90	64·90
19th ..	..	14·42	214·42	2·00	199·05	4·00	173·91	13·60	149·11	107·60	107·60	61·05	65·05
20th ..	..	14·33	214·33	1·83	198·88	4·00	173·91	13·70	149·21	107·90	107·90	61·55	65·55
21st ..	..	14·50	214·50	1·92	198·97	3·83	173·74	13·60	149·11	107·90	107·90	62·15	66·15
22nd ..	..	14·75	214·75	2·00	199·05	3·83	173·74	13·30	148·81	107·90	107·90	62·90	66·90
23rd ..	..	15·25	215·25	2·33	199·38	4·25	174·16	13·00	148·61	107·90	107·90	63·20	67·20
24th ..	..	15·92	215·92	3·00	200·05	4·33	174·24	13·00	148·51	107·80	107·80	63·40	67·40
25th ..	..	16·00	216·00	3·50	200·55	4·75	174·66	13·00	148·51	107·90	107·90	63·50	67·50
26th ..	..	16·75	216·75	3·83	200·88	5·25	175·16	15·40	150·91	108·30	108·30	63·50	67·50
27th ..	..	17·25	217·25	4·00	201·05	5·75	175·66	16·90	152·41	109·20	109·20	63·85	67·85
												Value of zero = 3·92 ft.	
28th ..	..	22·50	222·50	6·50	203·55	6·25	176·16	17·20	152·71	110·50	110·50	64·50	68·42
29th ..	..	25·50	225·50	12·00	209·05	8·00	177·91	17·20	152·71	111·30	111·30	65·60	69·52
30th ..	..	27·25	227·25	14·50	211·55	11·58	181·49	17·70	153·21	112·20	112·20	66·50	70·42
Average level	..	15·29	215·29	2·31	199·36	3·59	173·50	13·33	148·84	106·78	106·78	Vide footnote below.	

Note.—Since the 1st January 1929 the datum of all gauges has been finally altered to refer to the Bengal Public Works Department datum which is 6·25 feet above levels recorded since each gauge was established have been prepared.

*The Zero of the Buxa gauge has been checked from the G. T. S. Bench marks Nos. 125 and 126 on line 70K and found to be 169·91 feet above the Bengal P. W. D.

†On and from 1st January 1931, High water level and Low water level readings are shown at Swarupganj.

(A) The value of zero of gauge at the station was —2·00 feet from the 1st to the 6th June 1936, 4·00 feet from the 7th to the 27th June 1936 and 3·92 feet from the 7th June to the 27th June 1936—61·68 feet; and from the 28th to the 30th June 1936—65·58 feet.

(B) The value of zero of gauge at the station was 32·25 feet from the 1st to the 2nd June 1936, 30·97 feet from the 3rd to the 6th June 1936, 39·37 feet from the 1st to the 2nd June 1936—6·45 feet; from the 3rd to the 6th June 1936—2·59 feet; from the 7th to the 29th June 1936—3·19 feet and 46·30 feet on the 30th June

The 7th August 1936.

BENGAL.

month of June 1936 and the highest reading of each gauge above P. W. D. datum as well as the lowest gauge reading since 1876.

				River Bhagirathi.		River Jalangi.				River Brahmaputra.	
(B) Rampur-Boalia. Zero of gauge is 32·25 ft. above P. W. D. datum.		Goalundo. Zero of gauge is 1·409 ft. above Bengal P. W. D. datum.		Berhampore. Zero of guage is at P. W. D. datum.		Swarupganj.† Zero of guage is at P. W. D. datum.				Gauhati. Zero of gauge is 130·958 ft. above P. W. D. datum.	
From Benares, 471.	From Rajmahal, 64.	From Benares, 591.	From Rampur-Boalia, 120.								
26th August 1879. 64·24 ft.		16th August 1931. 29·60 ft.		14th August 1890. 63·46 ft.		25th September 1900. 35·30 ft.				24th August 1906. 169·25 ft.	
24th April 1931. 32·05 ft.		8th February 1914. 2·41 ft.		26th May 1884. 32·00 ft.		7th May 1896. 2·11 ft.				14th and 15th February 1936. 129·058 ft.	
Height above zero of gauge.	Height above P. W. D. datum.	Height above zero of gauge.	Height above P. W. D. datum.	Height above zero of gauge.	Height above P. W. D. datum.	Height above zero of guage.		Height above P. W. D. datum.		Height above zero of gauge.	Height above P. W. D. datum.
						H. W. L.	L. W. L.	H. W. L.	L. W. L.		
15	16	17	18	19	20	21	22	23	24	25	26
6·20	38·45	14·90	16·309	34·15	34·15	5·10	4·57	5·10	4·57	12·90	149·858
6·70	38·95	15·70	17·109	34·15	34·15	5·40	4·79	5·40	4·79	14·50	151·458
Value of zero = 36·07 ft.											
1·60	38·57	16·40	17·809	34·20	34·20	5·52	4·78	5·52	4·78	14·20	151·158
2·20	39·17	17·00	18·409	34·25	34·25	5·89	5·00	5·89	5·00	13·80	150·758
2·85	39·82	18·00	19·409	34·45	34·45	6·35	5·39	6·35	5·39	15·30	152·258
3·70	40·67	18·80	20·209	34·50	34·50	6·52	5·53	6·52	5·53	19·40	156·358
Value of zero = 39·37 ft.											
1·80	41·17	19·50	20·909	34·40	34·40	6·90	5·85	6·90	5·85	21·50	158·458
2·10	41·47	20·00	21·409	34·30	34·30	7·44	6·49	7·44	6·49	22·20	159·158
2·20	41·57	20·80	22·209	34·25	34·25	7·98	7·20	7·98	7·20	22·90	159·858
2·30	41·67	21·10	22·509	34·25	34·25	7·78	7·14	7·78	7·14	23·40	160·358
2·30	41·67	21·40	22·809	34·30	34·30	7·70	7·05	7·70	7·05	22·80	159·758
2·45	41·82	21·90	23·309	34·35	34·35	7·26	6·78	7·26	6·78	21·00	157·958
2·65	42·02	22·20	23·609	34·50	34·50	7·24	6·43	7·24	6·43	19·80	156·758
2·70	42·07	22·30	23·709	34·70	34·70	7·76	6·73	7·76	6·73	18·70	155·658
2·70	42·07	22·10	23·509	34·85	34·58	8·02	7·08	8·02	7·08	17·60	154·558
2·65	42·02	21·70	23·109	35·20	35·20	8·01	7·02	8·01	7·02	16·80	153·758
2·60	41·97	21·10	22·509	35·35	35·35	7·70	6·90	7·70	6·90	16·00	152·958
2·55	41·92	20·70	22·109	35·35	35·35	7·82	7·03	7·82	7·03	15·50	152·458
2·50	41·87	20·40	21·809	35·25	35·25	7·92	7·04	7·92	7·04	15·30	152·258
2·60	41·97	20·20	21·609	35·15	35·15	8·00	7·05	8·00	7·05	16·10	153·058
3·00	42·37	20·10	21·509	35·10	35·10	7·89	6·80	7·89	6·80	17·00	153·958
3·50	42·87	20·20	21·609	35·05	35·05	7·58	6·68	7·58	6·68	17·70	154·658
4·00	43·37	20·30	21·709	35·35	35·35	7·23	6·56	7·23	6·56	17·60	154·558
4·40	43·77	20·50	21·909	36·15	36·15	7·10	6·52	7·10	6·52	17·00	153·958
4·55	43·92	20·80	22·209	37·05	37·05	7·04	6·53	7·04	6·53	16·50	153·458
4·60	43·97	20·90	22·309	37·55	37·55	7·22	6·72	7·22	6·72	16·00	162·958
4·70	44·07	21·00	22·409	37·80	37·80	7·68	7·29	7·68	7·29	15·60	152·558
5·00	44·37	21·00	22·409	38·05	38·05	7·91	7·48	7·91	7·48	15·30	152·258
5·50	44·87	21·00	22·409	38·60	38·60	7·98	7·58	7·98	7·58	14·90	151·858
Value of zero = 0·00 ft.											
46·30	46·30	21·40	22·809	39·80	39·80	8·04	7·64	8·04	7·64	14·40	151·358
Vide footnote below.		20·11	21·519	35·41	35·41	7·27	6·52	7·27	6·52	17·39	154·348

the Kidderpore Old Dock Sill. The values of the highest and lowest readings have similarly been altered. Printed notes on the correction to be applied to all reduced datum.

28th to the 30th June 1936. Hence, the average height above zero of gauge at the station is thrice shown thus :—from the 1st to the 6th June 1936—64·03 feet ; from 7th to the 29th June 1936 and 0·00 feet on the 30th June 1936. Hence, the average height above zero of gauge at the station is four times shown thus :—from 1936.

J. F. RUSSELL, *Personal Assistant to the Chief Engineer to the Government of Bengal, Irrigation Department.*

Vital statistics of towns with a population of 50,000 and over of the Bengal Presidency for the week ending Saturday, the 1st August 1936.

District.	Nos.	Towns.	Population under registration according to census of 1931.			Births registered.		Deaths registered.																								
			Male.	Female.	Total.	Number registered (excluding still-births).	Still-births registered.	Cholera.	Small-pox.	Plague.	Cerebro-spinal meningitis.	Malaria.	Enteric fever.	Measles.	Relapsing fever. (Spirochetal).	Kala-azar.	Influenza.	Other fevers.	Dysentery.	Diarrhœa.	Pneumonia.	Pulmonary Tuberculosis.	Other respiratory diseases.	Injuries including suicide.	Deaths from child-birth.	Other causes.	Total of all causes.			Total of corresponding week of the previous year.		
																											Male	Female.	Total.	Male.	Female.	Total.
Calcutta ..	1	Calcutta ..	778,817	362,045	1,140,862	534	65	5	7	..	2	15	34	1	..	5	13	20	52	14	87	56	36	21	1	254	336	287	623	331	279	610
Burdwan ..	2	Asansol Mining Settlement.	209,544	173,136	382,680	394	4	1	..	..	..	2	1	..	..	..	..	112	4	..	14	1	6	4	2	74	106	115	221	104	90	194
Howrah ..	3	Howrah ..	145,120	79,753	224,873	121	6	4	..	..	..	1	7	..	..	..	..	1	5	10	9	6	20	1	1	45	55	55	110	67	49	116
Dacca ..	4	Dacca ..	79,365	59,153	138,518	74	1	..	..	..	..	..	2	..	..	2	..	5	3	1	8	1	3	..	1	22	29	19	48	37	18	55
24-Parganas	5	Bhatpara ..	60,134	24,841	84,975	34	2	..	..	..	..	2	..	..	..	1	..	10	2	1	2	2	1	..	1	8	14	16	30	25	15	40
	6	Garden Reach.	36,131	19,741	55,872	20	..	1	..	..	..	5	1	..	..	..	..	2	3	..	3	2	1	1	..	3	13	9	22	6	6	12
Chittagong ..	7	Chittagong.	35,049	18,107	53,156	13	1	1	..	..	..	1	1	..	..	..	..	1	1	..	1	..	..	4	..	3	9	4	13	15	12	27

Calcutta, the 7th August 1936.

A. C. CHATTERJI, M.B., D.P.H., MAJOR, I.M.S., *Director of Public Health, Bengal.*

DISTRICT REPORTS ON WEATHER AND CROPS.

For the week ending on the 5th August 1936.

Summary.—During the week the rainfall was heavy in parts of North and East Bengal; elsewhere it was light to moderate. Cultivation of winter paddy is progressing but more rain is needed for the operation in places. Reaping of autumn crops continues in full swing. Prospects of standing crops are generally satisfactory. During the week ending Saturday, the 15th August, the number of persons receiving gratuitous relief was 2,481, 4,458 and 2,270 in Nadia, Murshidabad and Burdwan, respectively. In 24-Parganas, 71 persons were employed on test relief works on Saturday, the 1st August. Test relief works have been closed in Burdwan. The average price of common rice for the province has risen by about 0·13 per cent. as compared with that of the previous week.

Serial No.	District and sub-division.	Rainfall.	Price of common rice, in seers, per rupee.		Character of the weather, condition of crops, etc.
			This week.	Previous week.	
1	2	3	4	5	6
		Inches.			
1	24-Parganas ..	0·32	9 $\frac{5}{16}$	9¼	Weather seasonable. Fodder and water are sufficient. No import or export of paddy except in Basirhat where import of paddy from East Bengal continues. 71 persons were engaged on test relief works on the last day of the week ending the 1st August. Agricultural loans also gratuitous relief were distributed during the week in Sadar, Basirhat and Diamond Harbour. Condition of jute plants is not satisfactory in Baraset and Basirhat, but good in Sadar. Some damage caused by insects. Height varies from 4 feet to 5 feet 11 inches. 2-anna crop harvested in Basirhat. Steeping water ample in Basirhat.
	Diamond Harbour..	0·87	9⅜	9½	
	Barrackpore ..	1·65	8½	8½	
	Baraset ..	1·90	9	9	
	Basirhat ..	4·70	11	11	
2	Nadia ..	2·15	8⅝	8⅝	Weather seasonable. Agricultural operation is going on in full swing. Fodder and water are sufficient. Distribution of agricultural loan is being made in all subdivisions except Kushtia. Gratuitous relief was given to 113 persons in Sadar, 2,296 persons in Chuadanga and to 72 persons in Meherpur for the week ending 1st August. Condition of jute plants fair. Steeping water ample. Height of plants varies from 4½ to 5½ feet. Some damage by insects in Ranaghat and Chuadanga. River level higher. Harvesting not yet commenced.
	Kushtia ..	0·73	10	(n)	
	Meherpur ..	1·85	11	11	
	Chuadanga ..	0·47	11	12	
	Ranaghat ..	0·65	9½	9½	
3	Murshidabad ..	1·29	9¾	9¾	Weather seasonable. Prospects of standing crops are favourable. Fodder and water are sufficient. No large import or export. Number of persons receiving gratuitous relief in the distressed areas for the week ending Saturday, the 1st August, was 268, 2,861 and 1,329 in Lalbagh, Kandi and Jangipur subdivisions, respectively. Condition of jute plants healthy and growth satisfactory. No damage. Steeping water ample. River level 1 foot higher. Harvesting not yet commenced.
	Lalbagh ..	1·19	10½	10½	
	Jangipur ..	3·46	10¼	10¼	
	Kandi ..	0·39	9¾	9½	
4	Jessore ..	0·59	11½	11	Weather seasonable. Prospects of standing crops are fair. Harvesting of *aus* paddy is going on. No large export or import. Fodder and water are sufficient. Cattle-disease is reported from Kaliganj police-station. Condition of jute plants healthy and growth fair. No damage. Steeping water not yet sufficient. Height of plants varies from 3½ to 4 cubits. River level same as in last year. Harvesting not yet begun.
	Jhenidah ..	1·21	13	13	
	Magura ..	1·89	12	13	
	Narail ..	1·03	13	12	
	Bongaon ..	1·88	10	10	
5	Khulna ..	4·84	10	10	Weather seasonable. Fodder and water are sufficient. Test relief works suspended. Condition of jute plants healthy. No damage. Steeping water ample. Height of plants varies from 6 to 10 feet. River level higher. Harvesting not commenced.
	Satkhira ..	2·89	10½	10½	
	Bagerhat ..	5·39	8½	8½	

(n) Not reported.

Serial No.	District and sub-division.	Rainfall.	Price of common rice, in seers, per rupee.		Character of the weather, condition of crops, etc.
			This week.	Previous week.	
1	2	3	4	5	6
		Inches.			
6	Burdwan ..	1·47	9½	9½	Weather seasonable. Condition of crop is favourable. Fodder is sufficient. Cattle-disease is reported from Ausgram police-station. 2,270 persons received gratuitous relief during the week ending 1st August 1936. Condition of jute plants healthy. No damage. Steeping water sufficient. Height varies from 3 to 4½ cubits. River level lower. Harvesting not yet commenced.
	Asansol ..	2·39	11	11	
	Katwa ..	0·51	9	9	
	Kalna ..	1·50	8½	8½	
7	Birbhum ..	1·83	10	10	Weather seasonable. Prospects of standing crops are fair. Transplantation of winter paddy continues. Water is sufficient but there is scarcity of fodder. No labourers were employed on test relief works as the relief works were closed down.
	Rampurhat ..	0·68	10	10½	
8	Bankura ..	1·51	10	10	Weather hot and cloudy. Transplantation of paddy seedlings is nearly completed. Prospects of standing crops are good. Fodder and water are sufficient. Cattle-disease is reported from Raipur circle. Relief works have been suspended.
	Vishnupur ..	1·39	9½	9½	
9	Midnapore ..	1·87	10	10	Transplantation of winter paddy continues. Condition of jute plants is healthy in Tamluk but fair in Ghatal. Steeping water ample. Fodder and water are sufficient.
	Contai ..	0·66	9 7/16	9	
	Tamluk ..	1·08	9	9	
	Ghatal ..	3·68	11	10½	
	Jhargram ..	4·47	9	9	
10	Hooghly ..	0·43	9½	9½	Weather seasonable. Fodder and water are sufficient. Condition of jute plants healthy. No damage. Steeping water ample. Height about 5 feet. Harvesting not yet commenced. River level lower than last year. About 2-anna crops harvested in Arambagh.
	Serampore ..	0·66	9½	10	
	Arambagh ..	2·05	9½	9½	
11	Howrah ..	0·24	10	10	The sky cloudy. Transplantation of winter paddy continues. Fodder and water are sufficient. Condition of jute plants healthy. No damage. Height 4 feet on average. River level lower.
	Uluberia ..	1·33	9½	9½	
12	Rajshahi (Rampur-Boalia).	3·75	9½	9½	Weather seasonable. Condition of standing crops appears to be favourable. Fodder and water are sufficient. Cattle-disease exists in Atrai and Nandigram police-stations. Condition of jute plants healthy and growth satisfactory. Some damage caused by insects. Steeping water available. Height about 4 to 6 cubits. River level normal. About 4-anna crops harvested.
	Naogaon ..	1·00	10½	10½	
	Nator ..	0·53	9½	9½	
13	Dinajpur ..	2·39	10	11	Weather seasonable. Transplantation of winter paddy and harvesting of jute continue. Fodder and water are sufficient. Cattle-disease is reported from Thakurgaon subdivision. Condition of jute plants healthy and growth satisfactory. No damage. Steeping water ample. Height of plants 7 to 8 feet. River level lower than last year. Harvesting continues.
	Thakurgaon ..	3·94	11	11	
	Balurghat ..	3·24	11½	11½	
14	Jalpaiguri ..	5·87	10	10	Transplantation of winter paddy and harvesting of *bhadoi* paddy are in progress. Fodder and water are sufficient. Cattle-disease is reported from Alipur Duar and Bhalka Tahsil. Condition of jute plants healthy and growth satisfactory. No damage. Steeping water insufficient in some places. Height of plants 8½ feet on average. Harvesting not yet commenced. Rainfall moderate.
	Alipur ..	5·14	10	10	
..					

Serial No.	District and sub-division.	Rainfall.	Price of common rice, in seers, per rupee.		Character of the weather, condition of crops, etc.
			This week.	Previous week.	
1	2	3	4	5	6
		Inches.			
15	Darjeeling ..	9·85	8	8	Weather favourable. Transplantation of paddy and *marua* is in progress. Fodder and water are sufficient. Condition of jute plants fair. No damage. Steeping water ample. Harvesting not yet commenced.
	Kurseong ..	5·48	8	8	
	Siliguri ..	6·87	10	10	
	Kalimpong ..	4·04	6½	6½	
16	Rangpur ..	1·91	11	11	Weather hot and dry. More rain is necessary. Prospects of standing crops are fair. Transplantation of *aman* paddy continues. No large export or import. Fodder and water are sufficient. Cattle-disease is reported from Lalmonirhat police-station. Condition of jute plants fair. No damage. Steeping water ample. Height of plants 7 to 8 feet. Rainfall not sufficient in Sadar. About 3-anna crops harvested.
	Nilphamari ..	(*n*)	(*n*)	10½	
	Kurigram ..	5·88	10	10	
	Gaibandha ..	2·90	9	9	
17	Bogra ..	0·86	10½	10½	Cultivation of winter paddy continues. Prospects of standing crops are fair. *Aus* paddy and jute are being harvested. Fodder and water are sufficient. Condition of jute plants healthy, except in the eastern part of the district. No damage. Steeping water sufficient. Height 6 to 9 feet. About 6-anna crops harvested.
18	Pabna ..	0·95	10	10	Weather seasonable. Condition of standing crops is satisfactory. Flood water is rising. Harvesting of *aus* paddy and jute is in full swing. Fodder and water are sufficient. Condition of jute crop healthy and growth satisfactory. No damage. Steeping water sufficient. Height of plants 6 to 7 feet. Harvesting 7 annas at Serajganj and 5½ annas at Sadar.
	Serajganj ..	1·13	11½	11½	
19	Malda ..	2·54	10½	10½	Weather cloudy. Transplantation of winter rice continues. Fodder and water available. Condition of jute plants healthy. Some damage done to crop by flood. Steeping water ample. Height of water same as last year. Harvesting not yet commenced.
20	Cooch Behar ..	4·27	12½	12½	Weather seasonable. Preparation of lands for winter paddy, rearing of seedlings in nursery and transplantation of same are in progress. Harvesting of autumn paddy, cutting, steeping and washing of jute continuing. Prospects and condition of standing crops fair. Fodder and water sufficient. Cattle-disease is reported from Sadar, Dinhatta and Tufanganj subdivisions.
21	Dacca ..	4·59	11	10½	Rainfall at North Sadar (Kapasia) 9·16. Weather seasonable and its effects on the agricultural operations are fair. Jute plants are healthy and their growth is satisfactory. Damage to the extent of 2 annas by the sudden rise of water in Munshiganj. Steeping water ample. About 8-anna crops harvested. River level lower. Fodder and water are sufficient. Cattle-disease exists in Araihazar.
	Manikganj ..	3·45	10	10	
	Narayanganj ..	3·78	12	12	
	Munshiganj ..	2·71	10½	10½	

(*n*) Not reported.

Serial No.	District and sub-division.	Rainfall.	Price of common rice, in seers, per rupee.		Character of the weather, condition of crops, etc.
			This week.	Previous week.	
1	2	3	4	5	6
		Inches.			
22	Mymensingh ..	7·61	10	10	Weather rainy and cloudy. Condition of crops is fair. Fodder and water are available. Condition of jute plants not so good No damage. Steeping water ample Height 4 to 6 cubits. River level lower than last year Rainfall normal. About 6-anna crops harvested
	Jamalpur ..	(n)	(n)	10½	
	Tangail ..	0·83	10	11	
	Netrakona	7·78	11¼	12	
	Kishorganj ..	5 59	10¾	10¾	
23	Faridpur ..	1·40	11½	11½	Weather seasonable. Condition of standing crops is fair. Fodder and water are sufficient. Condition of jute plants healthy No damage. Steeping water ample River level same as in last year. About 4-anna crops harvested
	Goalundo (Rajbari)	0 70	11	10½	
	Madaripur ..	2 86	10¼	10½	
	Gopalganj (a) ..	4·44	11	12½	
24	Bakarganj (Barisal)	3·48	10½	10½	Weather seasonable Prospects of standing crops are not bad in Sadar and fair in Patuakhali Fodder and water are sufficient Condition of jute plants little better No damage. Steeping water sufficient Height about 3 to 7½ feet River level normal About 6-7 anna crops harvested
	Pirojpur ..	(n)	(n)	9¾	
	Patuakhali ..	7·51	10½	10½	
	Dakshin Shabazpur (Bhola).	4·96	10	10	
25	Chittagong ..	13·56	10 11*	10 12*	Weather rainy. Condition of standing crops is fair. Fodder and water are sufficient. Cattle-disease is reported from places. Panga salt sells at 14 seers at Sadar and 12 seers at Cox's Bazar.
	Cox's Bazar ..	12·04	11	11	
26	Tippera (Comilla) ..	5·91	10¼	10	Weather fair Condition of jute plants healthy. Damage about 2 annas reported from Brahmanbaria. Steeping water ample. Height about 7 feet. River level same as in last year. About 4-anna crops harvested.
	Brahmanbaria ..	4·97	10¼	10¼	
	Chandpur ..	3·61	11¼	11¼	
27	Noakhali ..	7 93	10½	10½	Rainfall has affected the standing crops. Cattle-disease (Anthrax) prevails in Begamganj and Senbagh police-stations in Sadar Fodder and water sufficient. Condition of jute plants healthy. A little damage due to excessive rain Steeping water ample. Height 7 to 9 feet. River level a little lower than last year. About 5-anna crops harvested.
	Feni ..	4 26	10¾	10¾	
28	Chittagong Hill Tracts.	5·96	11	11	Weather rainy. Its effects are favourable. Cattle-disease is gradually subsiding. Fodder and water are sufficient.
29	Tripura State ..	3·64	10½	10½	Weather rainy. Fodder and water are sufficient. Cattle-disease exists in Belonia and Sabroom Divisions Cotton sells at Rs. 9 to Rs. 12 and jute at Rs. 2-8 to Rs 5-8 per maund. Condition of jute plants healthy. No damage. Steeping water ample. Height about 6 to 9½ feet. Harvesting not yet commenced.

(a) The rainfall at Haridaspur, which is very near to Gopalganj, is shown here.

* Burma rice. (n) Not reported.

S. ABDULLAH, for *Director of Agriculture, Bengal.*

Dacca, the 10th August 1936.

Wholesale prices current of food grains, gur, etc., in the undermentioned marts of Bengal for the second half of July 1936.

Marts.	Paddy local (best quality).			Paddy local (common quality).			Rice local (best quality).		
	Present return.	Next preceding return.	Corresponding return of last year.	Present return.	Next preceding return.	Corresponding return of last year.	Present return.	Next preceding return.	Corresponding return of last year.
1	2	3	4	5	6	7	8	9	10
	Rs. a. p.	Rs. a. p.	Rs. a. p.	Rs. a. p.	Rs. a. p.	Rs. a. p.	Rs. a. p.	Rs. a. p.	Rs. a. p.
Calcutta	2 15 0	2 14 0	2 9 0	2 10 0	2 9 0	2 7 0	5 8 0	5 6 0	5 12 0
Burdwan	2 8 0	2 8 0	2 2 0	2 6 0	2 6 0	2 0 0	4 10 0	4 8 0	4 10 0
Midnapore	2 8 0	2 8 0	2 2 0	2 2 0	2 2 0	1 14 0	4 12 0	4 12 0	4 4 0
Chittagong	1 14 0	1 14 6	1 13 0	1 13 0	1 13 6	1 11 0	4 10 0	4 8 0	5 0 0
Dacca	2 8 0	2 8 0	2 5 0	2 4 0	2 4 0	2 2 0	4 4 0	4 4 0	3 14 0
Pabna	2 4 0	2 4 0	2 6 0	2 0 0	2 0 0	2 1 0	4 14 0	4 14 0	4 12 0
Rangpur	2 2 0	2 0 0	1 14 0	1 14 0	1 12 0	1 12 0	5 4 0	5 0 0	5 8 0
Serajganj (Pabna)	..	..	..	..	..	..	..	..	..
Sarisabari (Mymensingh) ..	..	..	..	..	..	..	..	..	..
Narayanganj (Dacca)	..	..	..	..	..	..	..	..	..

Marts.	Rice local (common quality).			Wheat.			Raw cotton.		
	Present return.	Next preceding return.	Corresponding return of last year.	Present return.	Next preceding return.	Corresponding return of last year.	Present return.	Next preceding return.	Corresponding return of last year.
	11	12	13	14	15	16	17	18	19
	Rs. a. p.	Rs. a. p.	Rs. a. p.	Rs. a. p.	Rs. a. p.	Rs. a. p.	Rs. a. p.	Rs. a. p.	Rs. a. p.
Calcutta	4 12 0	4 12 0	4 8 0	3 11 0	3 9 0	3 5 0	21 12 0	22 12 0	17 4 0
Burdwan	4 4 0	4 2 0	3 10 0	..	..	..	..	..	..
Midnapore	3 12 0	3 12 0	3 5 6	..	..	..	..	..	..
Chittagong	3 12 0	3 12 0	3 12 0	..	..	..	..	..	..
Dacca	3 12 0	4 0 0	3 5 0	..	..	..	..	..	..
Pabna	4 2 0	4 2 0	3 10 0	..	..	..	..	..	..
Rangpur	4 6 0	4 1 0	3 12 0	..	..	..	..	..	..
Serajganj (Pabna)	..	..	..	..	..	..	..	..	..
Sarisabari (Mymensingh) ..	..	..	..	..	..	..	..	..	..
Narayanganj (Dacca)	..	..	..	..	..	..	..	..	..

Marts.	Coal.			Raw Jute (weighted average).			*Gur* (sugarcane).		
	Present Return.	Next preceding return.	Corresponding return of last year.	Present return.	Next preceding return.	Corresponding return of last year	Present return.	Next preceding return.	Corresponding return of last year.
	20	21	22	23	24	25	26	27	28
	Rs. a. p.	Rs. a. p.	Rs. a. p.	Rs. a. p.	Rs. a. p.	Rs. a. p.	Rs. a. p.	Rs. a. p.	Rs. a. p.
Calcutta	0 6 6	0 6 6	0 6 6	4 12 0	5 0 0	5 10 0	3 0 0	3 0 0	4 10 0
Burdwan	..	..	..	..	..	..	4 6 0	4 6 0	4 4 0
Midnapore	..	..	..	..	..	..	4 0 0	4 0 0	4 8 0
Chittagong	..	..	..	..	..	..	4 0 0	3 12 0	6 0 0
Dacca	..	..	..	..	..	..	3 12 0	3 12 0	5 8 0
Pabna	..	..	..	..	..	..	2 4 0	2 4 0	4 2 0
Rangpur	..	..	..	..	..	..	3 0 0 to 3 4 0	2 8 0 to 3 0 0	3 0 0 to 3 4 0
Sirajganj (Pabna)	..	..	..	4 0 0 (a)	4 4 0 (a)	5 6 0	..	..	..
Sarisabari (Mymensingh) ..	..	..	..	3 8 0 (a) to 6 0 0	3 8 0 (a) to 5 8 0	3 12 0 to 6 14 0	..	..	..
Narayanganj (Dacca)	..	..	..	3 12 0 to 5 0 0	3 12 0 to 5 0 0	5 0 0 to 6 0 0	..	..	..

(a) New.

Dacca, the 8th August 1936.

S. ABDULLAH, for *Director of Agriculture, Bengal.*

Prices-current (retail) of common rice and salt in the districts of Bengal for the second half of July 1936.

Districts and Marts.	Quantity per rupee in seers of eighty tolas.								
	Common rice.						Salt.		
	Average.			Cheapest.					
	Present return.	Next preceding return.	Corresponding return of last year.	Present return.	Next preceding return.	Corresponding return of last year.	Present return.	Next preceding return.	Corresponding return of last year.
	S. Ch.	S. Ch.	S. Ch.	S. Ch.	S. Ch.	S. Ch.	S. Ch.	S. Ch.	S. Ch.
Presidency Division.									
24-Parganas—									
1 Chetla Hat ..	9 13	9 9	10 1	11 8	11 4	11 6	19 6G	18 0C	17 12
2 Mogra Hat ..	9 6	9 2	9 11	10 5	10 0	10 5	16 0C 15 0K	16 0C 15 8K	16 0
3 Calcutta-Beliaghata..	8 6	8 6	8 12	10 0	10 0	11 8	18 10C 17 10K 16 0P	18 10C 17 10K 16 0P	16 0
Nadia—									
4 Goari	8 10	8 10	10 0	11 13	11 13	11 7	14 0P 14 0K	14 0P 14 0K	14 0†
5 Ranaghat ..	9 8	9 8	9 0	11 12	11 12	12 4	14 0P 14 0K	14 0P 14 0K	14 0†
Murshidabad—									
6 Berhampore ..	9 8	9 8	9 8	10 0	10 0	10 0	14 0K	14 0K	14 0K
7 Kandi	9 8	9 12	10 0	9 12	10 0	10 8	13 5K 13 5B	13 8K 13 8B	14 8
8 Jangipur ..	10 0	10 0	9 12	10 4	10 8	10 0	16 0K	16 0K	15 0
Jessore—									
9 Sadar	11 8	11 0	10 8	12 8	12 0	12 8	16 0P 16 0K	15 0P 15 0K	14 8†
10 Bongaon ..	10 0	10 0	9 12	12 8	12 8	12 0	14 8P 15 0K	14 8P 15 0K	14 8 13 0K
Khulna—									
11 Sadar	10 0	10 0	10 8	13 8	12 8	11 8	16 0C 16 0K	16 0C 16 0K	14 0 13 8K
12 Bagerhat ..	8 8	8 8	11 0	10 0	10 0	11 8	15 0K	15 0K	14 0
Burdwan Division.									
Burdwan—									
13 Sadar	9 4	9 4	11 0	9 8	9 12	10 8	13 0C 13 0K	13 0C 13 0K	16 0†
14 Kalna	8 8	8 12	9 6	12 4 (R)	12 0 (R)	9 12	18 0P	17 0P	16 0
Birbhum—									
15 Suri	10 0	10 0	11 0	11 0	10 8	12 0	14 0M	14 0M	14 0
16 Rampurhat ..	10 8	10 8	9 0	11 0	11 0	10 0	16 0C	16 0C	16 0
Bankura—									
17 Sadar	10 0	10 0	10 0	11 0	11 0	11 0	14 0P	14 0P	14 0
18 Vishnupur ..	9 0	9 0	10 0	10 0	10 0	11 0	13 8P	13 0P	14 0

P—Panga. R—Rangoon rice. K—Karkach. B—Bombay. C—Crushed.

N.B.—The prices of Karkach and Liverpool salt tally with each other in marts marked†.

M—Madras. G—Graham.

Prices current (retail) of common rice and salt in the districts of Bengal for the second half of July 1936.

Districts and Marts.	Quantity per rupee in seers of eighty tolas.								
	Common rice.						Salt.		
	Average.			Cheapest.					
	Present return.	Next preceding return.	Corresponding return of last year.	Present return.	Next preceding return.	Corresponding return of last year.	Present return.	Next preceding return.	Corresponding return of last year.
	S. Ch.	S. Ch.	S. Ch.	S. Ch.	S. Ch.	S. Ch.	S. Ch.	S. Ch.	S. Ch.
BURDWAN DIVISION—*concld.*									
Midnapore—									
19 Sadar	11 0	11 0	9 10	11 11	11 11	12 8	14 0L 14 0K	14 0L 14 0K	14 0
20 Contai	9 0	8 0	10 0	10 0	9 0	12 0	13 0C	13 0C	13 0
Hooghly—									
21 Sadar	9 0	9 8	10 0	11 8	11 8	11 0	16 0P	16 0P	14 0
22 Arambagh ..	9 8	9 8	11 0	10 0	10 0	11 8	15 8P 15 0K	15 0P 14 8K	15 0 14 8K
Howrah—									
23 Sadar	9 0	9 8	10 0	11 0	11 0	11 0	16 0C 13 0K	17 8C 15 0K	16 0
24 Uluberia ..	9 8	9 8	10 12	10 8	10 8	12 0	16 0C 13 0K	16 0C 13 0K	16 0
RAJSHAHI DIVISION.									
Rajshahi—									
25 Rampur-Boalia ..	9 8	9 8	10 0	10 4	10 4	10 8	12 0C 12 0K	12 0C 12 0K	13 4†
26 Nator	9 12	9 12	10 14	10 8	10 8	11 4	12 0C 12 0K	12 0C 12 0K	12 0†
27 Dinajpur—Railbazar Hat.	9 0	10 0	12 0	10 12	11 0	13 4	10 0K	10 0K	14 0†
28 Jalpaiguri—Sadar ..	9 0	9 0	10 0	10 0	11 0	12 0	13 0C	13 0C	13 0
Darjeeling—									
29 Sadar	8 0	9 0	9 0	9 0	9 0	10 0	10 8P 10 0K	10 0P 9 0K	10 8 9 0K
30 Siliguri ..	10 0	10 0	10 0	10 8	11 0	11 0	12 0P 12 0K 12 0C	12 0P 12 0K 12 0C	12 0†
Rangpur—									
31 Sadar	10 2	11 4	11 13	10 2	11 4	11 13	13 8P	13 8P	14 12
32 Nilphamari ..	11 0	11 6	10 0	12 4	12 8	13 0	12 8K	12 8K	12 8
33 Bogra—Sadar ..	10 8	10 8	11 13	10 12	10 12	12 3	12 0C	12 0C	12 0
Pabna—									
34 Sadar	10 0	10 0	11 0	11 8	11 8	11 8	14 0L 14 0K	14 0L 14 0K	13 0 13 4K
35 Serajganj ..	11 4	11 4	10 8	12 0	12 0	11 4	16 0L 15 0K	16 0L 15 0K	16 0 15 0K
Malda—									
36 Sadar	10 4	10 8	11 0	10 12	11 0	11 8	14 8OK 14 0K	14 8OK 14 0K	14 8 14 0K
37 Balia—Nawabganj	10 5	10 8	11 4	12 8	11 4	11 8	15 8OK 14 8K	15 8OK 14 8K	15 0 14 8K

P—Panga. K—Karkach. C—Crushed. L—Liverpool.

N. B.—The prices of Karkach and Liverpool salt tally with each other in marts marked †.

OK—Okha and other Indian varieties.

Prices-current (retail) of common rice and salt in the districts of Bengal for the second half of July 1936.

Districts and Marts.	Quantity per rupee in seers of eighty tolas.								
	Common rice						Salt.		
	Average.			Cheapest.					
	Present return	Next preceding return.	Corresponding return of last year.	Present return.	Next preceding return.	Corresponding return of last year.	Present return.	Next preceding return.	Corresponding return of last year.
	S. Ch.	S. Ch.	S. Ch.	S. Ch.	S. Ch.	S. Ch.	S. Ch.	S. Ch.	S. Ch.
Dacca Division.									
Dacca—									
38 Sadar	9 8	9 4	10 8	9 12	10 0	11 8	13 4C 13 4K	13 4C 13 4K	13 14 14 0K
39 Mirkadim ..	10 8	10 8	10 8	11 8	11 8	11 4	14 8K	14 8K	14 8K
Mymensingh—									
40 Nasirabad ..	10 0	9 8	10 0	11 0	11 0	11 4	13 0L 12 0K	13 8L 13 0K	13 0K
41 Netrakona ..	11 8	12 4	10 10	12 8	12 8	12 4	13 8L 12 8K	13 8L 12 8K	14 8 12 4K
Faridpur—									
42 Sadar ..	11 8	11 8	10 8	12 8	12 8	11 8	13 0K	13 0K	12 0
43 Rajbari ..	10 8	10 8	10 0	12 8	12 8	12 0	12 0C	12 0C	12 0
Bakarganj—									
44 Barisal ..	10 0	10 0	10 8	10 8	10 8	12 0	14 8C 14 8K	14 8C 14 8K	15 0 13 5K
45 Pirojpur ..	9 12	9 12	10 0	10 0	10 0	10 2	14 0C 14 0K	14 0C 14 0K	13 0†
Chittagong Division.									
Tippera—									
46 Comilla ..	10 0	10 0	10 0	10 11	10 11	10 11	14 8C	14 8C	12 13 10 10K
47 Chandpur ..	10 1	10 1	10 0	11 4	11 4	10 8	14 8C	16 0C	13 5
Noakhali—									
48 Kalitara Hat ..	9 0	9 0	10 0	10 8	10 8	10 8	13 0C 10 8K	13 0C 10 8K	13 0 11 0K
49 Feni Hat ..	10 0	10 0	10 12	10 12	10 12	11 8	13 0C 13 0K	13 0C 13 0K	15 0 10 0K
Chittagong—									
50 Sadar	8 12	9 0	8 0	10 0	10 0	10 10	13 0P	13 0P	13 0
51 Cox's Bazar ..	9 8	9 8	8 8	11 0	11 0	9 8	13 0P	13 0P	13 0
52 Chittagong Hill Tracts —Rangamati ..	11 0	11 0	10 0	12 0	12 0	11 0	10 8L 7 0K	10 8L 7 0K	13 0 6 4K

P—Panga. C—Crushed. K—Karkach. L—Liverpool.

N.B.—The prices of Karkach and Liverpool salt tally with each other in marts marked †.

Dacca, the 8th August 1936.

S. ABDULLAH, for *Director of Agriculture, Bengal.*

IRRIGATION DEPARTMENT, BENGAL.

Abstract statement showing the approximate volume of traffic and the tollage on canals in Bengal classed as Major Works and Minor Works and Navigation for the month of June 1936 as compared with the corresponding month of the previous year.

Canals.	1936-37.					
	Weight of cargo.		Rafts.		Tollage.	
	During the month.	To end of the month.	During the month.	To end of the month.	During the month.	To end of the month.
Major Works.	Tons.	Tons.	No.	No.	Rs.	Rs.
Midnapore Canal	837	3,072	2,300	2,675	789	3,223
Hijili Tidal Canal	4,319	14,816	..	325	6,537	24,038
Total ..	5,156	17,888	2,300	3,000	7,326	27,261
Minor Works and Navigation.						
Calcutta and Eastern Canals ..	25,750	78,310	22,258	73,819	16,783	50,306
Tolly's Nala	26,103	75,617	41,870	133,632	7,803	22,815
Madaripur Bil Route	20,635	32,172	5,500	11,497	6,259	15,080
Total ..	72,488	186,099	69,628	218,948	30,845	88,201
Magrahat Channels	2,564	7,037	425	2,006	2,217	4,456
Orissa Coast Canal	2,834	10,769	..	4,275	2,571	9,755
Grand Total ..	77,886	203,905	70,053	225,229	35,633	1,02,412

Canals.	1935-36.					
	Weight of cargo.		Rafts.		Tollage.	
	During the month.	To end of the month.	During the month.	To end of the month.	During the month.	To end of the month.
Major Works.	Tons.	Tons.	No.	No.	Rs.	Rs.
Midnapore Canal	1,050	3,039	3,475	3,775	1,296	3,735
Hijili Tidal Canal	5,300	10,929	..	150	9,407	18,976
Total ..	6,350	13,968	3,475	3,925	10,703	22,711
Minor Works and Navigation.						
Calcutta and Eastern Canals ..	23,860	77,841	84,053	118,874	16,229	53,939
Tolly's Nala	20,483	69,907	38,875	125,891	6,388	21,665
Madaripur Bil Route	20,642	34,229	3,000	11,050	8,316	19,005
Total ..	64,985	181,977	126,928	255,815	30,933	94,609
Magrahat Channels	1,715	7,380	350	6,875	1,518	3,564
Orissa Coast Canal	3,498	9,266	800	1,425	2,994	7,756
Grand Total ..	70,198	198,623	127,978	264,115	35,445	1,05,929

Canal.	June 1936.			
	Tollage, 1936-37.		Tollage, 1935-36.	
	During the month.	To end of the month.	During the month.	To end of the month.
	Rs.	Rs.	Rs.	Rs.
Sundarbans Steamer Route	4,948	14,430	4,640	12,270

J. F. RUSSELL,

Personal Assistant to the Chief Engineer to the Government of Bengal.

Calcutta, the 7th August 1936.

Statement of weekly gauge readings on the river Ganges at Rampur Boalia for the week ending the 1st August 1936.

Date.	Hour.	Height of surface above P. W. D. datum.	Height of surface above P. W. D. datum on the same date last year.	Remarks.
1936.				
26th July	7 a.m.	58·00	53·30	Value of B. M. on Rajshahi College step = 64·73 P. W. D. Zero of gauge = 0·00 P. W. D.
27th „	7 „	58·30	54·90	
28th „	7 „	58·20	55·85	
29th „	7 „	58·55	56·40	
30th „	7 „	58·90	56·60	
31st „	7 „	59·00	56·75	
1st August	7 „	59·40	57·05	

Highest recorded level on 26-8-1879 = 64·24.
Lowest recorded level on 24-4-1931 = 32·05.

S. GUPTA, *Subdivisional Officer,*
Irrigation Department, Rajshahi

Rampur Boalia, the 2nd August 1936.

DEPARTMENT OF AGRICULTURE, BENGAL.

Dacca, the 4th August 1936.

First Forecast of the Sugarcane Crop of Bengal, 1936-37.

(*Note.*—On an average of the five years ending 1934-35, the area under sugarcane in Bengal has represented some 7·2 per cent. of the total area under sugarcane in British India.)

Character of the season.—At the beginning of the season the weather was generally favourable for planting in East and North Bengal while insufficient rainfall interfered with the progress of the operation in some West Bengal districts. Subsequent conditions were generally helpful for growth. The outlook, so far, is reported to be satisfactory, on the whole.

Area planted.—The total area planted with sugarcane for the province is reported to be 353,200 acres this year as against 324,700 and 325,400 acres reported respectively in the corresponding and final forecasts of last year.

K. McLEAN,
Director of Agriculture, Bengal.

First Forecast of the Sugarcane Crop of Bengal, 1936-37.

District.	Estimated normal area under sugarcane.	Estimated area under sugarcane.		Date by which the sowing of the crop generally commenced this year, and whether that date was early, normal or late.	Remarks by District Officers.
		Last year.	This year.		
1	2	3	4	5	6
	Acres.	Acres.	Acres.		
24-Parganas ..	3,300	2,800	2,800	February. Normal ..	The weather has not been favourable.
Nadia ..	10,000	12,000	13,000	End of February. Normal.	The weather has been favourable on the whole.
Murshidabad ..	4,300	6,700	7,500	April. Late ..	The increase in area is due to propaganda work and to establishment of the Beldanga Sugar Mill. The effects of weather on the growth of the crop have been favourable.
Jessore ..	2,500	4,600	4,100	April. Normal ..	The decrease in area is due to low price of *gur*. The growth of the crop is not healthy on account of incessant rainfall.
Khulna ..	500	2,300	1,600	April. Late ..	The decrease in area is due to want of rain at the planting time and to low price. The weather has been fair.
Burdwan ..	11,600	7,600	8,000	Middle of March. Normal. ..	The weather and its effects have been favourable.
Birbhum ..	9,100	7,600	7,400	Beginning of May (Late).	The weather and its effects have been fair.
Bankura ..	3,100	3,200	3,000	Middle of April. Normal	The weather was unfavourable at planting time but subsequently it has been favourable to the growth of the crop.
Midnapore ..	8,000	5,000	5,500	March. Normal ..	The effects on the growth of the crop are good.
Hooghly ..	3,000	2,600	2,000	End of March. Normal	The decrease in area is due to unfavourable weather at the planting time, but subsequently it has been improved.
Howrah ..	3,800	2,700	2,800	Early part of April. Normal.	The weather has been favourable.
Rajshahi ..	7,500	20,200	20,000	December. Normal ..	The weather has been favourable on the whole.
Dinajpur ..	20,500	47,000	52,700	End of March. Normal	The increase in area is due to propaganda work. The weather has been favourable.
Jalpaiguri ..	5,000	5,500	5,700	Middle of February. Normal.	The weather has been favourable.
Darjeeling ..	300	200	200	February. Normal ..	The weather and its effects have been fair.
Rangpur ..	21,900	27,200	30,000	Ditto ..	The increase in area is due to free distribution of cane cuttings. The weather and its effects on the growth of the crop are satisfactory.
Bogra ..	4,000	8,500	9,000	January. Normal ..	The increase in area is due to propaganda work. The weather and its effects have been fair.
Pabna ..	4,000	6,000	6,000	Last week of January. Normal.	The weather and its effects have been favourable.
Malda ..	300	3,200	8,200	January. Normal ..	The increase in area is due to propaganda work. The weather was favourable at the sowing time but not so afterwards.
Dacca ..	19,000	35,900	42,300	Lowland—November and December. Normal. Highland—January. Normal.	The increase in area is due to propaganda work. The weather was favourable but growth of the plants suffered in the Manikganj subdivision and in Sripur police-station of the Sadar subdivision for drought.
Mymensingh ..	16,400	45,000	50,000	April ..	The increase in area is due to propaganda work. The weather and its effects have been fair.
Faridpur ..	6,700	16,000	15,000	Latter part of January. Late.	The decrease in area is due to continued drought. The effects on the growth of the crop are not satisfactory.
Bakarganj ..	18,200	42,000	45,000	January. Normal ..	The increase in area is due to propaganda work and also for the high market of *gur* at the beginning of the sowing season. Owing to unfavourable weather the growth of the crop is not fair.
Chittagong ..	6,000	6,000	6,000	February and March. Normal.	The weather has not been favourable for want of timely rain.
Tippera ..	900	2,200	2,500	March. Normal ..	The increase in area is due to propaganda for substitute crops and to increased demand of *gur*. The effects of weather on the growth of the crops have been favourable.
Noakhali ..	800	1,700	1,800	November. Normal ..	The weather and its effects have been favourable.
Chittagong Hill Tracts.	1,100	1,100	1,100	Third week of March. Normal.	The effects of weather on the growth of the crop have been favourable.
Total Bengal	200,800	325,400	353,200		

Printed and published by the Superintendent, Government Printing, Bengal Government Press, Alipore, Bengal, on the 13th August 1936.

Registered No. C207

No. 34 1936

BENGAL LIBRARY

The Calcutta Gazette

Published by Authority

THURSDAY, AUGUST 20, 1936.

CONTENTS:

	Page.
Part I.—Orders and Notifications by the Governor of Bengal, the Government of Bengal, the High Court, Government Treasury, etc.	1951—1987
Part IA.—Orders and Notifications by the Government of India republished for general information	223—227
Part IB.—Educational Notices ..	1341—1356
Part II.—Advertisements ..	769—786
Part III.—Acts of the Bengal Legislative Council	*Nil*
Part IV.—Bills introduced in the Bengal Legislative Council, Reports of Select Committees presented or to be presented to that Council, and Bills published before introduction in that Council ..	*Nil*
Part V.—Acts of the Indian Legislature assented to by the Governor-General and Ordinances promulgated under section 72 of the Government of India Act ..	*Nil*
Part VI.—Bills introduced in the Council of State and Legislative Assembly, Reports of Select Committees presented to the Council and Assembly and Bills published under rule 18 of the Indian Legislative Rules	*Nil*
Supplement No. 34 :—	
Cotton Ginning and Pressing ..	1123
List of Properties and Abstract Account of Securities held under Act VI of 1890 on the 31st March 1936 ..	1124—1151
Weekly Gauge Readings	1152
First Forecast of the Cotton Crops of Bengal, 1936-37	1153
Monthly Weather and Crop Report—Weekly Weather and Crop Report ..	1154—1158

PART I

Orders and Notifications by the Governor of Bengal, the Government of Bengal, the High Court, Government Treasury, etc.

Orders by the Government of Bengal.

No. 9323A.

Appointments and Transfers.

GENERAL.

Rangpur.—No. 7078A.—11th August 1936.—Babu Sudhansu Kumar Banerji, Deputy Magistrate and Deputy Collector, on leave, is posted temporarily to the headquarters station of the Rangpur district.

Jessore-Khulna.—No. 7095A.—11h August 1936.—Mr. B. N. Chakravarty, I.C.S., officiating Additional District and Sessions Judge, Jessore and Khulna, is appointed temporarily to act as District and Sessions Judge, Khulna.

Tippera-Jessore-Khulna. — No. 7099A.—11th August 1936.—Babu Amrita Lal Banarji, Subordinate Judge and Assistant Sessions Judge, Tippera, is appointed temporarily to act as Additional District and Sessions Judge, Jessore and Khulna.

Burdwan-Faridpur. — No. 7172A.—12th August 1936.—Maulvi Faizal Haq, Deputy Magistrate and Deputy Collector, Katwa, Burdwan, is transferred to the headquarters station of the Faridpur district.

24-Parganas-Presy. Divn.—No. 7192A. — 13th August 1936. —Babu Subodh Chandra Das Gupta, Sub-Deputy Collector, now employed as Colonisation Officer, 24-Parganas, is posted to the Presidency Division on being relieved of his present duties.

Tippera-Chittagong.— No. 7241A.— 15th August 1936.—Mr. J. George, I.C.S., officiating Additional District and Sessions Judge, Tippera and Chittagong, is appointed temporarily to act as District and Sessions Judge, Tippera.

Rajshahi.—No. 7252A.—15th August 1936. —Babu Manoranjan Maitra, Deputy Magistrate and Deputy Collector, Rajshahi, is appointed temporarily to act as Magistrate and Collector of that district.

Rajshahi-Murshidabad.—No. 7254A.—15th August 1936.—Mr. K K. Hajara, I.C.S., officiating Magistrate and Collector, Rajshahi, is appointed temporarily to act as District and Sessions Judge, Murshidabad.

POLICE.

Bakarganj-Dacca. No. 9286A. — 15th August 1936. —Rai Sahib Jamini Mohan Chatarji, officiating Deputy Superintendent of Police, Bakarganj, is transferred to the headquarters station of the Dacca district.

Bakarganj.— No. 9287A. — 15th August 1936. —Babu Anath Nath Ganguli, Deputy Superintendent of Police, on leave, is posted to the headquarters station of the Bakarganj district

ECCLESIASTICAL.

Midnapore. — No. 9325A. — 17th August 1936.—In exercise of the powers conferred by section 9 of the Indian Christian Marriage Act, 1872 (XV of 1872), the Governor in Council is pleased to grant a license to the Reverend Chili Prokasam of the American Baptist Mission at Kharagpur, Midnapore, authorizing him to grant certificates of marriages between persons who are Native Christians.

Confirmation.

GENERAL.

Dacca. — No. 7132A.—12th August 1936. —Mr. Phanindra Nath Mitra, officiating Additional District and Sessions Judge, Dacca, is confirmed in the grade of District and Sessions Judges, with effect from the 1st March 1936.

Leave.

GENERAL.

No. 7038A. — 10th August 1936.—Babu Karuna Nidhan Ghosh, Sub-Deputy Collector, is allowed leave on average pay for six months, under the proviso to rule 81 (*b*) (*ii*) of the Fundamental Rules, in extension of the leave granted to him under the orders of the 19th June 1936.

No. 7041A.—10th August 1936.—Mr. A. F. M. Rahman, I.C.S., is allowed leave on average pay for two months and eighteen days, under rule 81 (*b*) (*ii*) of the Fundamental Rules, in extension of the leave granted to him under the orders of the 6th July 1936.

Jessore.—No. 7165A.—12th August 1936. —Maulvi Panaullah Ahmad, Deputy Magistrate and Deputy Collector, Jessore, is allowed leave on average pay, under the proviso to rule 81 (*b*) (*ii*) of the Fundamental Rules, from the 28th July to the 17th October 1936, inclusive.

Faridpur.—No. 7168A.—12th August 1936. —Babu Binode Mohan Chakrabatti, Deputy Magistrate and Deputy Collector, Faridpur, is allowed leave on average pay up to the 23rd December 1936, under rule 81 (*b*) (*ii*) of the Fundamental Rules, with effect from the 24th August 1936, or any subsequent date on which he may be relieved.

Bakarganj. —No. 7177A. — 12th August 1936.—In supersession of the orders of the 16th June 1936, Maulvi M. Yusuf, Sub-Deputy Collector, on probation, Bakarganj, is allowed leave for thirty-nine days, with effect from the 13th July 1936, viz., earned leave for twenty days, under rule 10 of the Bengal Services (Revision of Leave) Rules, 1934, and leave on private affairs for the remaining period, under rule 15(*a*) of those Rules.

Chittagong.—No. 7223A. — 14th August 1936.—Maulvi Tasmimuddin Ahmad, Sub-Deputy Collector, Chittagong, is allowed leave on average pay for three months, under the proviso to rule 81 (*b*) (*ii*) of the Fundamental Rules, with effect from the 22nd June 1936.

G. P. HOGG,
Chief Secy. to the Govt. of Bengal.

NOTIFICATIONS.

No. 7108A.—11th August 1936. — In the Rules issued in the Government of Bengal, General Department, notification No. 848, dated the 4th February 1913, published in page 209 of Part I of the *Calcutta Gazette* of the 5th February 1913, *substitute* the following *for* the existing rule 17:—

"17. Fees payable under the Act shall be paid as specified in Schedule M:

Provided that all seamen, non-commissioned officers and men, and warrant officers and other ranks of His Majesty's Naval, Military and Air Forces, and members of the Indian Military Police Force shall be exempted from the payment of any fees mentioned in Part I of the said schedule and also from the payment of the fees mentioned in Part II thereof when such fees are payable to the Registrar-General or a Government servant who is not a Minister of Religion."

No. 9330A.—17th August 1936.—In exercise of the power conferred by rule 39 read with rule 7 of the Civil Services (Classification, Control and Appeal) Rules, made by the Secretary of State for India in Council under section 96B (*2*) of the Government of India Act, the Governor of Bengal hereby make the following amendment to the Bengal Provincial Services Recruitment Rules, published under Appointment Department notification No. 7183A., dated the 22nd May 1930, as subsequently amended:—

Substitute the following for the existing entry against (*a*) of item 10 in Schedule II, as inserted by correction slip No. 3:—

(*a*) By selection from qualified candidates subject as follows:—

One half of the number of appointments shall be reserved for candidates who, after having completed a post-graduate course of practical training arranged by the Principal, Bengal Engineering College, Sibpur, have passed the Public Works Department practical examination, and in calculating the number of appointments to be made in any year on the basis of the above proportion, any excess or deficit in the number of appointments made on the same basis in the course of recruitment in the previous year shall be adjusted as far as possible.

No. 9368A. — 18th August 1936.—The Hon'ble Sir Brojendra Lal Mitter, K.C.S.I., Member of the Executive Council of the Governor of Bengal, on return from the leave of absence announced in notification No. 4235A., dated the 18th April 1936, resumed charge of his office in the afternoon of the 18th August 1936.

G. P. HOGG,
Chief Secy. to the Govt. of Bengal.

Reforms.

NOTIFICATIONS.

No. 6318A.R.—12th August 1936.—In exercise of the powers conferred by paragraph 20 of the Fifth Schedule to the Government of India Act, 1935, read with paragraph 23 of Part I of the Government of India (Provincial Legislative Councils) Order, 1936, and of all other powers enabling him in that behalf, the Governor of Bengal in Council is hereby pleased to direct that the following amendments shall be made in the Bengal Legislative Council Electoral (Preparation, Revision and Publication of Electoral Rolls) Rules, 1936, published under notification No. 2042 A.R.D., dated the 20th May 1936, as subsequently amended, namely:—

(*1*) In the heading to Part IV of the said rules, for the words "Special provision" the words "Special provisions" shall be substituted.

(*2*) In Part IV of the said rules, after rule 27 the following rule shall be added, namely:—

"28. *Interpretation in case of doubt.*—If any question arises as to the interpretation of these rules otherwise than in connection with an election inquiry held under the Act or any Order or rule made thereunder, or under an Act of the Provincial Legislature, the question shall be referred for the decision of the Governor, and his decision shall be final."

No. 6198A.R. — 12th August 1936. — In exercise of the powers conferred by paragraph 20 of the Fifth Schedule to the Government of India Act, 1935, read with paragraph 26 of Part I of the Government of India (Provincial Legislative Assemblies) Order, 1936, and of all other powers enabling him in that behalf, the Governor of Bengal in Council is hereby pleased to direct that the following amendments shall be made in the Bengal Legislative Assembly Electoral (Preparation, Revision and Publication of Electoral Rolls) Rules, 1936, published under notification No. 899 A.R.D., dated the 15th May 1936, as subsequently amended, namely:—

(*1*) In the heading to Part V of the said rules for the words "Special provision" the words "Special provisions" shall be substituted.

(*2*) In Part V of the said rules, after rule 62 the following rule shall be added, namely:—

"63. *Interpretation in case of doubt.*—If any question arises as to the interpretation of these rules otherwise than in connection with an election inquiry held under the Act or any Order or rule made thereunder, or under an Act of the Provincial Legislature, the question shall be referred for the decision of the Governor, and his decision shall be final."

R. N. GILCHRIST,
Reforms Commr. and Joint Secy. (ex-officio) to the Govt. of Bengal.

POLITICAL DEPARTMENT.

Press.

NOTIFICATION.

No. 24954Pub. — 11th August 1936.—In exercise of the power conferred by section 19 of the Indian Press (Emergency Powers) Act, 1931 (XXIII of 1931), the Governor in Council is pleased to declare all copies, wherever found, of a book in Bengali entitled "Sarbaharar Dristité Robindranather Russiar Chithi" by Swadesh Ranjan Das, printed by Nripendra Nath Mukharji at the New Aryya Mission Press, at 9, Shibnarayan Das Lane and published by the same from 24B, College Row, Calcutta, to be forfeited to His Majesty on the ground that it appears to the Governor in Council that the said book contains words of the nature described in clause (*a*) of sub-section (*1*) of section 4 of the said Act.

G. P. HOGG,

Chief Secy. to the Govt. of Bengal.

Jails.

Orders by the Inspector-General of Prisons, Bengal.

No. 21279.—11th August 1936.—Dr. Sourindra Kumar Mozumder made over charge of the Comilla Jail to Dr. Khagendra Benode Sinha on the afternoon of the 1st August 1936.

R. E. FLOWERDEW, LT.-COL., I.M.S.,

Inspr.-Genl. of Prisons, Bengal.

POLICE DEPARTMENT.

Orders by the Inspector-General of Police, Bengal.

Calcutta.—No. 8593A.—11th August 1936. —The following postings and promotions are ordered with effect from the 1st August 1936:—

1. **Bankura.** —Babu Nibaran Chandra Biswas, officiating Inspector, Bankura, is absorbed in the permanent vacancy caused by the retirement of Babu Srish Chandra Chaudhuri, Inspector, and is confirmed in the rank of Inspector as he had officiating service for 2 years counting towards the period of probation. He will remain in Bankura.

2. **Mymensingh.**—Maulvi Abdul Marfat Khan, officiating Inspector, Mymensingh, is appointed probationary Inspector to fill the permanent vacancy caused by the retirement of Babu Surendra Mohan Sarkar, Inspector, and is posted to Mymensingh.

3. **Midnapore - Calcutta.** — Babu Bani Kantha Bhattacharji, Inspector, Midnapore, temporarily employed in the C. I. D., is transferred permanently to that department, *vice* Babu Subodh Chandra Lahiri, Inspector, retired.

4. **Bakarganj.**—Maulvi Qazi Abdul Naim, officiating Inspector, Bakarganj, is absorbed in the permanent vacancy caused by the retirement of Babu Subodh Chandra Lahiri, Inspector, and is confirmed in the rank of Inspector as he had officiating service for 2 years counting towards the period of probation. He will remain in Bakarganj.

5. **Chittagong.** — Babu Jay Narayan Mitra, officiating Inspector, Chittagong, is absorbed in the permanent vacancy caused by the retirement of Babu Sharat Chandra Ghosh, Inspector, and is confirmed in the rank of Inspector as he had officiating service for 2 years counting towards the period of probation. He will remain in Chittagong.

6. **Dacca.**—Khan Sahib Mafizuddin Ahmad, officiating Inspector, Dacca, is absorbed in the permanent vacancy caused by the retirement of Babu Sharat Chandra Basu, Inspector of that district, and is confirmed in the rank of Inspector as he had officiating service for 2 years counting towards the period of probation.

7. **Chittagong-Rangpur.** —Babu Panchanan Sikdar, officiating Inspector, Chittagong (District Intelligence Branch), is absorbed in the permanent vacancy caused by the retirement of Babu Nalini Mohan Sanyal, Inspector, Rangpur, and is confirmed in the rank of Inspector as he had officiating service for 2 years counting towards the period of probation.

8. **Dinajpur - Calcutta.** — Babu Annada Prasanna Ghosh, officiating Inspector, Dinajpur, is absorbed in the permanent vacancy caused by the transfer of Babu Shyamapada Chatarji, Inspector, to the Calcutta Police and is confirmed in the rank of Inspector as he had officiating service for 2 years counting towards the period of probation.

9. **24-Parganas.** — Maulvi Abdur Rauf, officiating Inspector, 24-Parganas, is absorbed in the permanent vacancy caused by the retirement of Babu Suresh Chandra Basu, Inspector of that district, and is confirmed in the rank of Inspector as he had officiating service for 2 years counting towards the period of probation.

10. **Darjeeling.**—Babu M. L. Tempa, officiating Inspector, Darjeeling, is appointed probationary Inspector to fill the permanent vacancy caused by the retirement of Babu Pahalman Singh, Inspector, and is posted to that district.

No. 8602A.—11th August 1936.—The following postings and promotions are ordered with effect from the 1st August 1936:—

1. **Burdwan.**—Babu Debendra Nath Das Gupta, officiating Court Inspector, Burdwan, is appointed probationary Court Inspector to

fill the permanent vacancy caused by the retirement of Babu Amar Nath Mukharji, Inspector, and is posted to Burdwan.

2. **Midnapore.**—Babu Phani Bhushan Basu, officiating Court Inspector, Midnapore, is appointed probationary Court Inspector to fill the permanent vacancy caused by the retirement of Babu Nripendra Nath Maitra, Inspector, and is posted to Midnapore.

3. **Noakhali.** — Maulvi Muhammad Mumtaz Ali, officiating Court Inspector, Noakhali, is appointed probationary Court Inspector to fill the permanent vacancy caused by the retirement of Babu Nalini Kanta Biswas, Inspector, and is posted to Noakhali.

4. **Dinajpur.**—Maulvi Jawadul Karim, officiating Court Inspector, Dinajpur, is appointed probationary Court Inspector to fill the permanent vacancy caused by the retirement of Babu Kshirod Lal Maitra, Inspector, and is posted to Dinajpur.

J. C. FARMER,
Inspector-General of Police (offg.).

JUDICIAL DEPARTMENT.

No. 9324A.

Powers.

Midnapore. —No. 9284A. — 15th August 1936.—In exercise of the power conferred by sub-section (*1*) of section 5 of the Bengal Borstal Schools Act, 1928 (Bengal Act I of 1928), the Governor in Council is pleased to invest Babu Sudhir Kumar Sen, Deputy Magistrate, Midnapore, with the powers necessary for carrying out the purposes of the said section.

G. P. HOGG,
Chief Secy. to the Govt. of Bengal.

Appointments and Transfers.

Rangpur.—No. 6202J.—11th August 1936.—In exercise of the powers conferred by sections 14 and 15 and the proviso to section 357 of the Code of Criminal Procedure, 1898 (Act V of 1898), the Governor in Council is pleased—

(*a*) to confer upon Babu Nalini Kanta Biswas the powers of a Magistrate of the second class, in the district of Rangpur, for a period of three years from the date of this notification, in respect to such cases as may be made over to him within the limits of the Sadar subdivision of the said district,

(*b*) to direct that he shall, in addition to sitting singly, sit as a member of the Sadar bench in the said district, and

(*c*) to direct him to take down evidence in the English language.

Darjeeling.—No. 6204J.—11th August 1936.—In exercise of the powers conferred by sections 14 and 15 and the proviso to section 357 of the Code of Criminal Procedure, 1898 (Act V of 1898), the Governor in Council is pleased—

(*a*) to confer upon Babu Rama Sankar Prosad the powers of a Magistrate of the third class, in the district of Darjeeling, for a period of three years from the date of this notification,

(*b*) to direct him to sit as a member of the Sadar bench in the said district, and

(*c*) to direct him to take down evidence in the English language.

Rangpur.—No. 6229J.—13th August 1936.—In exercise of the powers conferred by sections 14 and 15 and the proviso to section 357 of the Code of Criminal Procedure, 1898 (Act V of 1898), the Governor in Council is pleased—

(*a*) to confer upon Maulvi A. R. M. Abdul Wahed the powers of a Magistrate of the third class, in the district of Rangpur, for a period of three years from the date of this notification, in respect to such cases as may be made over to him within the limits of the Gaibandha subdivision of the said district,

(*b*) to direct that he shall, in addition to sitting singly, sit as a member of the Gaibandha bench in the said district, and

(*c*) to direct him to take down evidence in the English language.

Bakarganj.—No. 6252J.—15th August 1936.—In exercise of the powers conferred by sections 14 and 15 of the Code of Criminal Procedure, 1898 (Act V of 1898), the Governor in Council is pleased—

(*a*) to confer upon Maulvi Mofizuddin Ahmed Chaudhuri the powers of a Magistrate of the third class, in the district of Bakarganj, for a period of three years from the date of this notification, and

(*b*) to direct him to sit as a member of the Pirojpur bench in the said district.

Pabna-Bogra.—No. 6254J.—15th August 1936.—The services of Babu Nikunja Bihari Banarji, Subordinate Judge and Assistant Sessions Judge of Bogra, in the district of Pabna and Bogra, are placed at the disposal of the Government of Assam.

24-Parganas.—No. 6256J.—15th August 1936.—Babu Tej Chandra Mukharji, officiating Subordinate Judge and Assistant Sessions Judge, is appointed to act, until further orders, as Subordinate Judge and Assistant Sessions Judge of the 24-Parganas.

24-Parganas-Hooghly.—No. 6259J.—15th August 1936.—Mr. Santi Priya Basu, officiating Subordinate Judge of the 24-Parganas, is appointed on reversion to be a munsif in the district of Hooghly, to be ordinarily stationed at Howrah.

Leave.

Midnapore. — No. 6218J.—12th August 1936.—Babu Nishi Kanta Banarji, Subordinate Judge and Assistant Sessions Judge, Midnapore, is allowed leave on average pay for six months, on medical certificate, under the proviso to Fundamental Rule 81 (*b*) (*ii*), in extension of leave already granted to him.

Tippera.—No. 6221J.—14th July 1936.—Babu Manindra Mohan Bhattacharji, munsif of Nabinagar, in the district of Tippera, is allowed leave on average pay for six weeks, under rules 81(*b*)(*ii*) and 82(*b*) of the Fundamental Rules, in extension of the leave granted to him under the orders of the 14th May 1936.

Mymensingh.—No. 6222J.—16th July 1936. Maulvi Abdul Jabbar Khan, munsif of Mymensingh (Sadar), is allowed leave on average pay, for the period from the 3rd August to the 13th October 1936, under rules 81(*b*)(*ii*) and 82(*b*) of the Fundamental Rules. He is also permitted to affix thereto the civil court vacation of 1936, under rule 82(*d*) of those Rules.

Jessore.—No. 6223J.—21st July 1936.—Babu Upendra Narayan Majumdar, munsif of Magura, in the district of Jessore, is allowed leave on average pay for the period from the 3rd August to the 13th October 1936, under rules 81(*b*)(*ii*) and 82(*b*) of the Fundamental Rules. He is also permitted to affix thereto the civil court vacation of 1936, under rule 82(*d*) of those Rules.

Chittagong.—No. 6224J.—28th July 1936.—Babu Santosh Kumar Mitra, munsif of Patiya, in the district of Chittagong, is allowed leave on average pay for the period from the 17th August to the 13th October 1936, under rules 81(*b*)(*ii*) and 82(*b*) of the Fundamental Rules. He is also permitted to affix thereto the civil court vacation of 1936, under rule 82(*d*) of those Rules.

Burdwan.—No. 6225J.—30th July 1936.—In modification of the orders of the 19th June 1936, Babu Dhirendra Nath Bagchi, munsif of Katwa, in the district of Burdwan, is allowed leave for the period from the 25th February to the 30th June 1936, viz., leave on average pay for three months and seven days, under rules 81(*b*)(*ii*) and 82(*b*) of the Fundamental Rules, and leave on half average pay for the remaining period, under rule 81(*d*) of those Rules.

Burdwan.—No. 6226J.—1st August 1936.—Babu Aditya Chandra Datta, munsif of Burdwan (Sadar), is allowed leave on average pay for one month, under rules 81(*b*)(*ii*) and 82(*b*) of the Fundamental Rules, with effect from the 16th July 1936.

NOTIFICATIONS.

Khulna.—No. 6206J.—11th August 1936.—In exercise of the power conferred by section 65 of the Bengal Village Self-Government Act, 1919 (Bengal Act V of 1919), the Governor in Council is pleased to appoint the following members of the Barakpur union board within the Daulatpur police-station in the Sadar subdivision of the Khulna district, to be, during their term of office as such members, a union bench within the jurisdiction of the said union board for the purposes of that section:—

Babu Haripada Biswas.

Babu Jadunath Biswas.

Munshi Afel Sarif.

Babu Harasit Deb.

Khulna.—No. 6207J.—11th August 1936.—In exercise of the power conferred by section 73 of the Bengal Village Self-Government Act, 1919 (Bengal Act V of 1919), the Governor in Council is pleased to appoint the following members of the Barakpur union board within the Daulatpur police-station in the Sadar subdivision of the Khulna district, to be, during their term of office as members, a union court within the jurisdiction of the said union board for the purposes of that section:—

Babu Haripada Biswas.

Babu Jadunath Biswas

Munshi Afel Sarif.

Babu Harasit Deb.

Birbhum.—No. 6234J.—13th August 1936.—In exercise of the power conferred by section 65 of the Bengal Village Self-Government Act, 1919 (Bengal Act V of 1919), the Governor in Council is pleased to appoint Babu Rakhal Chandra Pal, a member of the Nanoor union board within the Nanoor police station in the Sadar subdivision of the Birbhum district, to be, during his term of office as such member, a member of the union bench within the jurisdiction of the said union board for the purposes of that section, *vice* Babu Anadi Kinkar Ray, removed.

Birbhum.—No. 6235J.—13th August 1936.—In exercise of the power conferred by section 73 of the Bengal Village Self-Government Act, 1919 (Bengal Act V of 1919), the Governor in Council is pleased to appoint Babu Rakhal Chandra Pal, a member of the Nanoor union board within the Nanoor police-station in the Sadar subdivision of the Birbhum district, to be, during his term of office as much member, a member of the union court within the jurisdiction of the said union board for the purposes of that section, *vice* Babu Anadi Kinkar Ray, removed.

T. ROXBURGH,

Secy. to the Govt. of Bengal (offg.).

LOCAL SELF-GOVERNMENT DEPARTMENT.

NOTIFICATIONS.

Minister-in-charge: The Hon'ble Sir Bijoy Prasad Singh Roy, Kt.

Hooghly.—No. 6201M.—11th August 1936. —In exercise of the power conferred by section 58 (*2*) of the Bengal Municipal Act, 1932 (Bengal Act XV of 1932), the Government of Bengal (Ministry of Local Self-Government) are pleased to appoint Mr. W. Mitchell to be a Commissioner of the Rishra-Konnagar Municipality in the district of Hooghly, *vice* Mr. J. S. Robertson, deceased.

Bogra. — No. 6299M. — 14th August 1936. — The following draft of by-laws, which has been framed by the Commissioners of the Bogra Municipality, in the district of Bogra, under section 414 of the Bengal Municipal Act, 1932 (Bengal Act XV of 1932), and which the Government of Bengal (Ministry of Local Self-Government) propose to confirm under section 506 of the Act, is published for the information of persons likely to be affected thereby.

2. The draft will be taken into consideration on the 1st December 1936, and any objection or suggestion received by the undersigned through the District Magistrate and the Divisional Commissioner before that date will be duly considered:—

Draft by-laws.

Model by-laws under section 414 of the Bengal Municipal Act, regulating slaughter-houses for the slaughter of animals meant for human consumption.

1. Animals shall be slaughtered as humanely as possible.

2. No dogs shall be permitted within the slaughter-house.

3. *Hours of work.*—The hours of work fixed by the Commissioners shall be conspicuously printed on a board with the name of the lessee and displayed in a conspicuous place in the slaughter-house.

4. The slaughter-house shall be sufficiently lighted to allow for work after dusk.

5. Trees shall not be permitted to overhang the premises. The slaughter-house may be enclosed by wire-netting to prevent the entrance of birds.

6. No portion of the slaughter-house shall be used for living or sleeping unless it is separated from the place where animals are slaughtered by a substantial wall and contains a window or windows opening directly to the air and of dimensions not less than one-tenth of the superficial area of the floor space.

7. No person suffering from any contagious or infectious disease shall be employed or allowed to enter the slaughter-house.

8. Bones, offal, gut, hoofs, horns and other refuse shall be kept in properly constructed, covered and removable vessels made of non-absorbent material until arrangements can be made to remove them.

9. At the close of every working day every floor or pavement shall be thoroughly washed and all fragments of gut, blood or other matters detached in the process of disembowelling and skinning shall be collected and placed in suitable vessels or receptacles to be forthwith removed with their covers from the slaughter-house for disposal in a manner approved by the Commissioners. Each such vessel shall be constructed of non-absorbent material and shall have a closely fitting cover and shall contain a sufficient quantity of deodorant or disinfectant.

10. At the close of every working day every bench, table, tub, vessel, utensil or implement, which has been in use during the day, shall be thoroughly cleansed with water containing a deodorant or disinfectant.

11. At the close of every working day all filth, blood or refuse which may have been splashed upon any inside portion of the slaughter-house shall be removed by scraping or other effectual means.

12. Every vessel or receptable when not in use shall be kept thoroughly clean.

13. Within the first ten days of March, June, September and December the interior of the slaughter-house above the floor or pavement shall be thoroughly washed with hot lime-wash if such place has been in use as a slaughter-house since the last occasion on which it was so washed:

Provided that if any part thereof is covered with impervious material, it shall be sufficient to cleanse the same thoroughly with water.

14. The interior of the slaughter-house shall not be allowed, by reason of want of repair to the surface thereof, to facilitate the absorption of any liquid filth or refuse or other noxious or injurious matter.

15. *Inspection of meat.*—The licensee shall permit the meat to be inspected after slaughter by a competent person appointed by the Commissioners in this behalf to find out cyste cercus cellulose, tubercular infection or any other infective or unwholesome condition of the carcass. Carcasses showing signs of tubercular infection or encysted tape worms (cyste cercus cellulose) shall be destroyed.

16. If the Commissioners arrange for the meat to be stamped after inspection by a competent person to indicate the quality of the meat or if they fix prices for different grades of meat to be sold in public markets, the licensee shall permit the meat to be so stamped and shall sell the meat at the prices fixed.

17. *Penalty.*—The breach of any of the above by-laws shall render the license of any private slaughter-house liable to suspension.

Rajshahi. — No. 6301M. — 14th August 1936. — In exercise of the power conferred by section 506 of the Bengal Municipal Act, 1932 (Bengal Act XV of 1932), the Government of Bengal (Ministry of Local Self-Government) are pleased to confirm the by-laws framed by the Commissioners of the Rajshahi Municipality in the district of Rajshahi under section 375 (*a*) of the said Act and published for information under notification No. 1547M., dated the 10th March 1936.

Murshidabad.—No. 6350M.—17th August 1936.—In exercise of the power conferred by section 506 of the Bengal Municipal Act, 1932 (Bengal Act XV of 1932), the Government of Bengal (Ministry of Local Self-Government) are pleased to confirm the by-laws framed by the Commissioners of the Berhampore Municipality, in the district of Murshidabad, under section 434 of the said Act and published for information under notification No. 2614M., dated the 23rd April 1936.

Bogra.—No. 6352M.—17th August 1936.—The following draft of by-laws, which has been framed by the Commissioners of the Bogra Municipality, in the district of Bogra, under section 460 of the Bengal Municipal Act, 1932 (Bengal Act XV of 1932), and which the Government of Bengal (Ministry of Local Self-Government) propose to confirm under section 506 of the Act, is published for the information of persons likely to be affected thereby.

2. The draft will be taken into consideration on the 2nd November 1936, and any objection or suggestion received by the undersigned through the District Magistrate and the Divisional Commissioner before that date will be duly considered:—

Draft by-laws.

By-laws regulating sarais, dharamsalas and other lodging houses.

1. *Fine.*—The penalty for infringement of any of the following by-laws shall be—

(*a*) a fine not exceeding the sum stated at the foot of the by-law,

(*b*) in the case of a second or subsequent conviction for a similar offence, a fine not exceeding the sum (if any) stated in that behalf at the foot of the by-law.

Registration and inspection of sarais, dharamsalas and other lodging-houses.

2. The owner of each *sarai*, *dharamsala* or lodging-house shall have the same registered in the office of the Commissioners and shall specify at the time of registration the number of persons to be accommodated in each room thereof.

Fine, Rs. 10.

3. The owner or person in charge of each *sarai*, *dharamsala* or lodging-house shall permit the same to be inspected at any time by any officer authorised in that behalf by the Commissioners at a meeting.

Fine, Rs. 10.

Prevention of overcrowding and uncleanliness.

4. The owner or person in charge of any *sarai*, *dharamsala* or lodging-house shall not allow any room therein to be occupied at any time by a larger number of persons than may be provided with a floor space of not less than 25 square feet and a cubic space of not less than 250 cubic feet per adult person.

Explanation.—Two children under ten years of age shall be counted as one adult person for the purposes of this by-law.

Fine, Rs. 10.

5. The owner or person in charge of a *sarai*, *dharamsala* or lodging-house shall see that the rooms and other parts thereof and the surroundings thereof are kept clean and well-ventilated and that proper and sufficient arrangements are made for conservancy with separate privies and urinals for the use of males and females, and for drinking water for the use of the inmates.

Fine, Rs. 10.

Precautions in the case of outbreak of infectious diseases.

6. In the event of an outbreak of any infectious or contagious disease in a *sarai*, *dharamsala* or lodging-house, the owner or person in charge thereof shall at once give information to the Commissioners respecting the existence of such disease.

Fine, Rs. 10; on a second or subsequent conviction Rs. 50.

7. If any person is attacked with an infectious or contagious disease in a *sarai*, *dharamsala* or lodging-house, the owner or person in charge thereof shall take immediate steps for the segregation of other healthy inmates thereof and shall adopt such precautionary measures as may be directed by the Commissioners.

Fine, Rs. 10; on a second or subsequent conviction Rs. 50.

General.

8. The owner or person in charge of a *sarai*, *dharamsala* or lodging-house shall not allow the same to be used for immoral purposes.

Fine, Rs. 10.

9. The owner or the person in charge of a *sarai*, *dharamsala* or lodging-house shall not allow a leper or other person suffering from an open sore or any loathsome or contagious disease to be employed in or to assist in the carrying on of any business in, or to enter or occupy any portion of such place.

Fine, Rs. 10.

Bogra.—No. 6356M.—17th August 1936.—The following draft of by-laws, which has been framed by the Commissioners of the Bogra Municipality, in the district of Bogra, under section 392 of the Bengal Municipal Act, 1932 (Bengal Act XV of 1932), and which the Government of Bengal (Ministry of Local Self-Government) propose to confirm under section 506 of the Act, is published for the information of persons likely to be affected thereby.

2. The draft will be taken into consideration on the 2nd November 1936, and any objection or suggestion received by the undersigned through the District Magistrate and the Divisional Commissioner before that date will be duly considered:—

Draft by-laws.

By-laws under section 392 of the Bengal Municipal Act, 1932, for control, etc., of dangerous diseases (Cholera, Small-pox, Plague, Diptheria, Cerebro-spinal meningitis, etc.).

1. *General.*—In these by-laws "patient" means a person suffering from or suspected to be suffering from any dangerous disease or likely to suffer from any such disease owing to exposure to infection or contagion.

2. On the outbreak of any dangerous disease in any building other than a public hospital the persons referred to in section 377 of the Bengal Municipal Act, 1932, shall, within 12 hours after he becomes cognizant of the existence of the disease, give information respecting the existence of such disease, together with a brief history, the cause so far as it can be ascertained, the duration and the number of persons affected thereby, either personally or in writing, to the Health Officer or Sanitary Inspector or any other officer appointed by the Commissioners in this behalf.

Fine, Rs. 50.

3. If any—

(*a*) mill,

(*b*) factory,

(*c*) workshop,

(*d*) tea-garden, or

(*e*) other place,

where more than 50 persons are employed is situated—

(*i*) within the municipality, the owner, occupier or person in charge of such mill, factory, workshop, tea-garden or other place;

(*ii*) within 2 miles of the limits of the municipality, and the office of business of such mill, factory, workshop, tea-garden or other place is situated within the municipality,

the person in charge of such office shall, on the occurrence of a dangerous disease in such mill, factory, workshop, tea-garden or other place, notify such occurrence to the Health Officer, Sanitary Inspector or any other officer appointed by the Commissioners in this behalf in the manner and within the time specified in by-law 2.

Fine, Rs. 50.

4. On the occurrence of a dangerous disease in a family, the guardian or one of the parents of any school-going children in such family shall, as soon as he becomes cognizant of the existence of the disease, notify the fact to the head of the institution concerned as well as to the Health Officer, Sanitary Inspector or any other officer appointed by the Municipal Commissioners in this behalf in the manner and within the time specified in by-law 2.

Fine, Rs. 50.

5. On receipt of the report of the outbreak of any dangerous disease in the family of any scholar, the head of the institution shall grant quarantine leave to the scholar concerned and shall not allow him to rejoin the school unless and until such scholar produces a certificate from the Health Officer or a registered medical practitioner to the effect that he is free from infection.

Fine, Rs. 50.

6. On the outbreak of any dangerous disease the Commissioners shall—

(*i*) give public notice of the places or buildings affected and take such other steps under section 376, as they deem necessary for the prevention of the spread of the disease;

(*ii*) depute the Health Officer or any other officer appointed by them in this behalf to investigate into the causes of the outbreak in such manner as they deem suitable:

Provided that no officer shall enter any building for such investigation between sunset and sunrise and all such investigations shall be conducted with due regard to the social and religious customs of the family affected.

7. *Isolation and segregation.*—When in the opinion of the Health Officer or of a Sanitary Inspector or of any registered medical practitioners specifically consulted by the Commissioners in this behalf, the isolation of a patient is a precaution necessary for the prevention of infection or contagion to the neighbouring population, the Commissioners shall order the patient to observe isolation and may direct the nearest relative in attendance on the patient, or the occupier of the building in which the patient is staying to arrange for the isolation of the patient in such manner and for such a period as may be approved by the Health Officer, Sanitary Inspector or the registered medical practitioner:

Provided that Commissioners shall not direct the patient to be removed from the building unless, in the opinion of the Health Officer or Sanitary Inspector or the registered medical practitioner, it is impossible to make proper arrangements for his isolation therein.

Fine, Rs. 50.

8. When under the provisions of section 378, the Commissioners have decided that the isolation of a patient in a hospital or a temporary treatment camp erected for the purpose, is necessary for the prevention or control of the spread of infection, they shall serve a notice in writing to that effect on the nearest relative in attendance on the patient or the occupier of the building in which the patient is staying, specifying the time of removal and have the patient removed to a hospital or treatment camp in such manner as may be directed by the Health Officer or a registered medical practitioner selected by the Commissioners for the purpose.

9. Persons suffering from Small-pox shall be segregated for six weeks from the date of appearance of the eruptions on the skin and in the case of Cholera, Plague, Diphtheria, Cerebro-spinal Meningitis and any other disease declared to be a dangerous disease by notification under section 3 (*ii*) (*b*) until the Health Officer or any registered medical practitioner certifies the patient to be free from infection.

10. No person shall enter any place wherein a patient is isolated without the permission of the Health Officer or a registered medical practitioner.

Fine, Rs. 50.

11. *Miscellaneous.*—The Commissioners may order that any person who has, in their opinion or in the opinion of the Health Officer, Sanitary Inspector or any registered medical practitioner, been exposed to infection from any dangerous disease shall take such drugs in such quantities as may be specified by the Health Officer or any registered medical practitioner, or shall submit himself to such vaccination or inoculation, at such time and place, as may be specified in the order.

Fine, Rs. 50.

12. No person shall, without the written permission of the Health Officer or Sanitary Inspector or any other officer appointed by the Commissioners in this behalf, dispose of the corpse of a person who has died of a dangerous disease except by burning or burial and the dead body shall be removed for this purpose within 12 hours after death.

Fine, Rs. 50.

13. Any person burning or causing to be burnt corpse of a person who has died of a dangerous disease shall cause every part of it to be completely reduced to ashes, and shall likewise cause the clothes or other articles brought with such corpse to be reduced to ashes.

Fine, Rs. 50.

14. No person shall bury or cause to be buried any corpse, which is likely to spread any dangerous disease, in a non-masonry grave, of less than 6 feet deep.

Fine, Rs. 50.

15. The corpse of a person who has died of a dangerous disease shall not be removed to any place other than a burning or burial ground or any other place appointed by the Commissioners for this purpose for its disposal.

Fine, Rs. 50.

16. If in the opinion of the Health Officer or Sanitary Inspector or any other person authorised by the Commissioners in that behalf, the corpse of a person who has died of a dangerous disease is likely to spread infection during removal to the burning or burial ground, the said Health Officer, Sanitary Inspector or person shall direct the relatives or attendants of the dead person to adopt special measures while removing the corpse for disposal.

17. No person shall carry to the burning or burial ground a corpse of a person who has died of a dangerous disease and for the removal of which special measures have been directed to be adopted without adopting such measures.

Fine, Rs. 50.

18. If the relatives or attendants of a person who has died of a dangerous disease are unable to adopt the measures referred to in by-law No. 16 for the removal of the corpse, the Health Officer or Sanitary Inspector or other person referred to in that by-law shall himself arrange for the removal of the corpse in the manner directed by him and realise the cost from the relatives or attendants of the dead person:

Provided that in the case of the dead body of a pauper or if the relatives of the dead are too poor to pay, the cost shall be met from the Municipal fund.

Fine, Rs. 50.

19. The Health Officer, Sanitary Inspector or any other person authorised by the Commissioners in this behalf may, by a notice in writing, require any person to carry out or to allow to be carried out by such agency and within such time as may be specified in the notice, such measures for the disinfection or evacuation of any premises exposed to infection or contagion from a dangerous disease in the occupation of such person or for the disinfection or destruction of any of the personal effects of a patient as the said Health Officer, Sanitary Inspector or person may consider necessary.

Fine, Rs. 50.

20. The Health Officer, Sanitary Inspector or any person authorised by the Commissioners in this behalf may, by a notice in writing, require the removal under such precautions and within such period as may be specified in

the notice of articles from a building, where a dangerous disease has broken out, to a place for washing and disinfection provided by the Commissioners.

Fine, Rs. 50.

21. Where a public disinfecting station or a place for disinfection or washing of infected articles has not been provided by the Commissioners, clothes used by persons suffering from a dangerous disease other than those which can be burnt shall be stored in a separate room. Such clothes shall not be sent to a *dhobi* or washerman to be washed nor shall they be washed in any source of water-supply, before they have been disinfected to the satisfaction of the Health Officer or Sanitary Inspector.

Fine, Rs. 50.

22. A *dhobi* or washerman shall not knowingly take clothes from a house where any person is suffering from a dangerous disease. He shall cease from carrying on his profession on the occurrence of any dangerous disease in the building occupied by him and shall not resume his profession till the building has been declared free from infection by the Health Officer, Sanitary Inspector or any other person appointed by the Commissioners in this behalf.

Fine, Rs. 50.

23. On the occurrence of a dangerous disease in the building occupied by a *dhobi*, he shall keep with him all the clothes previously sent to him for washing till the written permission of the Health Officer, Sanitary Inspector or any other person appointed by the Commissioners in this behalf has been obtained for returning them to the owners after being disinfected.

Fine, Rs. 50.

24. A dealer in food-stuffs, clothing or other articles shall cease from carrying on his occupation on the occurrence of any dangerous disease in the building occupied by him and shall not resume his occupation until he is permitted to do so by the Health Officer, Sanitary Inspector or any other person authorised by the Commissioners in this behalf.

Fine, Rs. 50.

25. When the Commissioners are satisfied that the condition of any privy, urinal, drain, sewer or cesspool is such as to cause the risk of an outbreak of any dangerous disease to the inhabitants of the neighbourhood, they may direct the occupier of the land or building on which such privy, urinal, drain, sewer or cesspool is situated to disinfect or to allow an officer of the Commissioners to disinfect the same with such disinfectants in such quantities and at such times as may be specified by them.

Fine, Rs. 25.

By-laws for the prevention of the spread of plague and the destruction of rodents, etc.

1. *Rat-proof bins or receptacles.*—When required by the Commissioners to do so for the prevention of the outbreak or spread of plague, every owner or occupier of a building shall provide therein a rat-proof bin or receptacle for the temporary deposit of food residue, cups, plates and other utensils prior to washing.

2. *Rat-proof dust bins.*—The Commissioners may provide rat-proof dust bins for the depositing of sewage, rubbish and offensive matter.

3. *Notification of rat mortality.*—Whenever the Commissioners apprehend any outbreak of plague they may require by beat of drums prompt notification of cases of mortality among rats in any building or on any land; whereupon the owner or occupier of such building or land shall forthwith give information of any such occurrence to the Health Officer or the Commissioners either personally or in writing.

4. *Rat destruction.*—Whenever the Commissioners at a meeting shall decide on the destruction of rats as a measure to prevent the outbreak or spread of plague within the municipality, it shall be lawful for the Commissioners to make necessary arrangements for such destruction by smoking rat holes and by placing rat traps and rat poison baits in any building, or land consistently with the safety of the building and its occupants.

5. *Disposal of dead rats.*—When required by the Commissioners to do so for the prevention of any outbreak or spread of plague, the owner or occupier of every building or land in which a dead rat is found shall forthwith place it in kerosine oil, until its disposal by burning can be arranged.

6. *Disinfection.*—When required by the Commissioners to do so for the prevention of the outbreak or spread of plague, the owner or occupier of a building shall arrange for the cleaning and disinfection, at such intervals as may be fixed by the Commissioners, of the floor and walls (up to a height of three feet from the floor or plinth) of the building with kerosine oil emulsion prepared by boiling half a pound of hard soap in half a gallon of water, to which four gallons of kerosine oil have been subsequently mixed.

7. *Disinfection.*—The owner or occupier of a building in which a case of plague has occurred shall arrange for the immediate disinfection of the sputum of the patient and discharges from buboes of such patient with Lysol, Cyllin or Hycol lotion in strength of one teaspoonful to a pint of water or in any other active germicidal solution.

8. *Disinfection of room of pneumonic plague cases.*—The Commissioners may arrange for the disinfection of the room in which a case of pneumonic plague has occurred with formalin, gas or with other suitable disinfectants.

9. *Arrangement for immunisation.*—The Commissioners may by beat of drum announce the arrangements made for anti-plague inoculation; whereupon every person shall be bound to get himself inoculated; provided that no person shall be bound to take inoculation who owing to constitutional disability or on medical grounds is certified by a registered medical practitioner to be unfit for such inoculation.

10. *Penalty.*—Whoever commits a breach of any of the by-laws 1, 3, 4, 5, 6, 7, 8 and 9 shall be punishable with a fine which may extend to Rs. 50.

By-laws for the prevention of rabies in men and animals.

1. The Commissioners may require by beat of drum that all dogs, whenever led or taken out into a public street or a public place shall be properly muzzled with a leather strap or any other similar contrivance.

2. Any person who has in his possession any dog which he knows or has reason to believe to be suffering from rabies or to have been bitten or snapped at by any dog, jackal or any other animal suffering from rabies or suspected to be suffering from rabies shall immediately intimate the fact in writing to the Commissioners and also to the Health Officer.

3. Persons bitten by any dog, jackal or other animal suffering from rabies or suspected to be suffering from rabies shall report the fact to the Commissioners in such details as may be required by the Commissioners.

4. Whoever commits a breach of any of the by-laws shall be punishable with a fine which may extend to Rs. 50.

By-laws for the control of malaria.

1. Whenever a campaign for the prevention of malaria has been decided upon by the Commissioners at a meeting, it shall be lawful for the Commissioners to treat all tanks, ponds, wells and water collections periodically with larvacides.

2. The owner of every drain or open cesspool shall when required by the Commissioners by a notice in writing treat such drain or cesspool with proper larvacides as a measure for the destruction of mosquitoes at intervals of not more than 10 days, provided that the necessary materials are supplied by the Commissioners. The Commissioners may themselves arrange for such measure being taken by their own staff.

3. The Commissioners may by notice in writing require the owner of any land to provide subsoil drains in order to improve its sanitary condition provided that there is a suitable outfall for such drains.

4. The owner or occupier of a building shall, when required by the Commissioners by a notice in writing within a period to be specified in such notice, provide mosquito-proof coverings for all cesspools within the premises and shall construct yard gullies communicating with the drains.

5. Every owner or occupier of a building shall, when required by the Commissioners by a notice in writing, cause every cistern and reserve tank for storage of water in his premises to be made mosquito-proof.

With the above end in view every cistern or reserve tank shall conform to the following conditions:—

(*a*) The lid shall be well fitted and of a pattern approved by the Health Officer or the Municipal Engineer or by the Chief Engineer, Public Health Department, and shall be kept closed by strong bolts and nuts or shall be secured by lock and key. The lids should not be opened until required for inspection by an officer authorised by the Commissioners in that behalf or for repair works.

(*b*) The warning pipe or the overflow pipe attached to the cistern or reserve tank shall be protected by a perforated metal cap of a standard pattern approved by the Health Officer or the Municipal Engineer or the Chief Engineer of the Public Health Department.

(*c*) The punch holes in the cisterns or reserve tanks made by the municipal officers shall be either utilised for connecting pipes or properly closed.

(*d*) Water gauges necessitating an aperture in the roof or the sides of the cistern or reserve tank shall be mosquito-proof.

(*e*) The flushing cisterns in urinals and water closets should be of mosquito-proof pattern.

(*f*) If the cistern or tank is not provided with a lid, as an alternative, every opening shall be covered with a mosquito-proof screen consisting of wire-netting of at least sixteen meshes to the inch each way or any other material which will effectively prevent ingress or egress of mosquitoes. In the case of non-provision of mosquito screen all unscreened containers shall be completely emptied every seven days and thoroughly cleaned and dried.

6. No new water connection shall be given to any building until the storage cisterns installed therein have been inspected and certified to be mosquito-proof by the Health Officer or the Municipal Engineer or any other competent person authorised by the Commissioners in this behalf.

7. Every cistern or reserve tank or flush cistern shall be numbered by the Commissioners to facilitate inspection.

8. Every cistern reserve tank or flush cistern shall be kept in good repair or shall be replaced by new ones when necessary.

9. If any cistern or reserve tank or flush cistern be found on examination by the Health Officer or any other officer appointed by the Commissioners to do such work, to be non-mosquito-proof or otherwise not in conformity with any of the aforesaid conditions he may by written notice require the owner or occupier of the premises—

(*a*) to replace the same, or

(*b*) to make such alteration therein as may be specified in the notice.

10. If any notice issued under by-law 9 is not complied with within seven days from the date of service thereof, the Commissioners may forthwith carry out the work and the costs thereof shall be payable by the person on whom the notice was issued.

11. When the Commissioners or any department of Government have constructed any work with the object of prevention of breeding of mosquitoes, the owner or occupier of the premises on which such works stand shall prevent such premises being used in any manner whatsoever that is likely to cause the deterioration or lessening of the efficiency of such work.

12. Whoever commits a breach of any of the foregoing by-laws, viz., 2, 4, 5, 8, 10 and 11 shall be liable to a fine which may extend to Rs. 50.

13. Any person who without the consent of the Commissioners interferes with, or injures or destroys or renders useless any works executed or any materials or things placed in, under or upon any premises, by or under the authority of the Commissioners referred to in by-laws 1, 2 and 10 shall be liable to a fine which may extend to Rs. 50.

By-laws for prevention of the spread of disease by flies or other insects.

1. Every baker or confectioner who keeps for sale any bread, sweetmeats or other prepared articles of food and every vendor or hawker of such articles shall keep the same in a glass-case or almirah provided with wire gauze screen so as to keep away flies or other insects.

2. Every owner or occupier of a meat or fish shop or stall shall, when required by the Commissioners by a notice in writing, make his shop or stall fly-proof with suitable materials.

3. Every owner or occupier of a building shall, when required by the Commissioners by a notice in writing, provide fly-proof receptacles for the collection of rubbish and other offensive matter until these can be deposited in such place as may be provided by the Commissioners for the purpose.

4. Whoever commits a breach of any of the by-laws 1 to 3 shall be liable to a fine which may extend to fifty rupees, and in the case of a continuing offence to an additional fine which may extend to five rupees per diem.

By-laws regulating rag-flock manufacture and trade in rags and bones.

1. In these by-laws—"rag-flock" means flock which has been produced wholly or partly by tearing up woven or knitted or felted materials, whether old or new, but does not include flock obtained wholly in the process of scouring and finishing or newly woven or newly knitted or newly felted fabrics.

2. No person shall sell or have in possession for sale any rag-flock manufactured from rags or use for the making of any article of upholstery, cushions or beddings, any such flock unless it conforms to the standard prescribed below and unless such flock has been disinfected to the satisfaction of the Commissioners.

The amount of soluble chlorine (as chlorides) removed by thorough washing with distilled water at a temperature not exceeding 25° centigrade from not less than 40 grammes of a well-mixed sample of rag-flock shall not exceed 30 parts of chlorine in 1000,000 parts of the flock.

3. No person shall trade in rags or in second hand clothing or bedding, unless the Health Officer or the Commissioners are satisfied about the cleanliness of such articles and also about the freedom of such articles from infection of any dangerous disease.

4. No person shall trade in bones or products of bones unless such articles have been disinfected before importation or exposure of sale, to the satisfaction of the Health Officer or the Commissioners.

5. Whoever commits a breach of any of the by-laws 2 to 4 shall be punishable with fine which may extend to fifty rupees.

By-law regarding disposal of refuse or waste matter or other matter or thing contaminated with or exposed to infection or contagion.

No person shall dispose of any refuse, waste matter or other matter or thing, which has been contaminated with or exposed to infection or contagion, except by burning or burial, after proper disinfection, at a safe distance from sources of water-supply.

Fine, Rs. 50.

Bogra.—No. 6347M.—17th August 1936—The following draft of by-laws, which has been framed by the Commissioners of the Bogra Municipality, in the district of Bogra, under section 434 of the Bengal Municipal Act, 1932 (Bengal Act XV of 1932), and which the Government of Bengal (Ministry of Local Self-Government) propose to confirm under section 506 of the Act, is published for the information of persons likely to be affected thereby.

2. The draft will be taken into consideration on the 1st December 1936, and any objection or suggestion received by the undersigned through the District Magistrate and the Divisional Commissioner before that date will be duly considered:—

Draft by-laws.

By-laws under section 434 for regulation of dairy and milk-supply.

1. *Registration of dairymen and dairies.*—The Municipal Commissioners may require by public notice the registration of all dairymen or persons selling milk and of all dairies within the municipality, within such period as may be fixed by them; whereupon no person shall keep any dairy within the area administered by the Commissioners, unless it has been registered, or carry on the business or trade of cow-keeper, dairyman or purveyor of milk, unless he is registered as such therein:

Provided that a person who sells milk of his own cows or buffaloes in small quantities to his workmen or to his neighbours for their convenience need not be so registered.

Note.—In these by-laws the term cow-keeper includes a keeper of buffaloes.

2. No dairy or milk shop shall be registered until the premises in which such trade is carried on have been inspected by the Health Officer or Sanitary Inspector or any competent officer appointed by the Commissioners for the purpose and until the Commissioners are satisfied with the arrangements for lighting, ventilation, drainage, conservancy, water-supply and general sanitary condition of such premises.

3. *Inspection.*—All dairies within a municipality shall be open to inspection at all times by the Commissioners or by the Health Officer, Sanitary Inspector or a person or persons authorised in this behalf at all hours of the day and night.

4. *Contamination of milk.*—No cow-keeper or dairyman or purveyor of milk or occupier of a milk store or milk shop shall—

(*a*) allow any person residing or employed in or about the premises, suffering from a dangerous or infectious disease or having recently been in contact with a person so suffering, to milk cattle or to handle vessels used for holding or keeping milk or in any way to take part or assist in the conduct of the trade or business of the cow-keeper or dairyman or purveyor of milk or occupier of a milk store or milk shop, so far as regards the production, distribution or storage of milk, or

(*b*) if himself so suffering, or having recently been in contact with a person so suffering, milk cattle or handle vessels used for containing milk or in any way take part in the conduct of his trade or business so far as regards the production, distribution or storage of milk, until in each case all dangers therefrom of the communication of infection to the milk or of its contamination has ceased.

5. The cow-keeper or dairyman or purveyor of milk shall, when so required by the Commissioners, the Health Officer, Sanitary Inspector or any other person authorised in this behalf, furnish the names and addresses of his customers and the sources of supply of milk to his establishment.

6. *Existence of disease among cattle.*—If at any time cattle plague, pleuro-pneumonia, foot and mouth disease, anthrax, tuberculosis or any disease of the udder exist among the cattle in a dairy or cattle-shed, the dairyman or cow-keeper shall forthwith report such occurrence to the Commissioners and shall not—

(*a*) mix the milk of the diseased cattle therein with other milk,

(*b*) use or sell such milk for human consumption;

(*c*) use or sell such milk for consumption by any animal unless and until it has been boiled.

7. *Storage, conveyance and distribution of milk.*—No receptacle which is incapable of being readily cleansed, shall be used for the storage or conveyance of milk.

8 Every receptacle used for the storage or conveyance of milk shall be—

(*i*) marked with the name and address of the owner;

(*ii*) provided with a lid without openings and so constructed and fitted as to prevent the access of dirt, dust, water, or of milk which has been splashed above the lid.

9. No such receptacle shall be opened during transit, except for the purpose of checking and sampling the milk.

10. Where milk is delivered in bottles, such bottles must be filled and closed on registered premises, and not thereafter tampered with before delivery to the consumer.

11. Every person engaged in the conveyance or distribution of milk shall take all practicable precautions to prevent the milk from being contaminated.

12. Vehicles used for the conveyance of milk shall be kept clean and no live animal shall be conveyed or carried at the same time as the milk.

13. *Ventilation and lighting.*—Every cattle-shed and every building used for keeping or storing milk (other than a cold store) shall be provided with a sufficient area of windows or external openings communicating directly with the external air in order to secure adequate lighting and ventilation.

14. *Lighting.*—Places in which milking is carried on after dark, shall be provided with adequate artificial lighting.

15. *Air-space.*—No cow-keeper or dairyman shall allow any shed to be occupied by a larger number of animals than will leave not less than eight hundred feet of air-space for each cow or buffalo, provided as follows:—

(*a*) in calculating the air-space for the purpose of this by-law, no space shall be reckoned which is more than 16 feet above the floor; but if the roof or ceiling is inclined, then the mean height of the same above the floor may be taken as the height thereof for the purposes of this by-law;

(*b*) any cattle-shed constructed and used before the date of the enforcement of this by-law shall be exempted from its operation until two years after that date.

16. *Receptacles for water.*—All receptacles for the storage or conveyance of water shall be kept clean. A dairyman or cow-keeper shall ensure that the drinking water for cows is protected from contamination.

17. *Water-supply.*—Every person in charge of a dairy shall cause it to be provided with an adequate supply of good and wholesome water for cleansing such dairy or any vessel that may be used therein for containing milk, and for all other reasonable and necessary purposes in connection with the use thereof.

18. *Cleanliness of cattle-shed.*—No cow-keeper or dairyman or purveyor of milk or occupier of a milk store or milk shop shall use or permit to be used any milk store or milk shop in his occupation as a sleeping apartment or for any purpose incompatible with the cleanliness of the milk shop or milk store and of the milk vessels and the milk therein or in any manner likely to cause contamination of milk therein.

19. No cow-keeper or dairyman or purveyor of milk shall keep swine or poultry in any cattle-shed or other building used by him for keeping cows or in any milk store or other place used by him for keeping milk for sale.

20. Every cow-keeper and dairyman shall cause every part of the interior of every cattle-shed or dairy in his occupation to be thoroughly cleansed from time to time and as often as may be necessary to secure that such places shall be at all times reasonably clean.

21. Every cow-keeper and dairyman shall cause the ceilings and the walls of the cattle-shed or dairy in his occupation to be properly lime-washed at least twice every year and at such other times as may be necessary:

Provided that this requirement shall not apply to such ceilings and walls for which lime-washing is unsuitable.

22. Every cow-keeper and dairyman shall cause the floor of every such cow-shed or dairy to be thoroughly washed, and all dung and offensive matter accumulating inside such shed or dairy to be swept and removed as often as may be necessary but not less than twice every day.

23. *Cleanliness of milk shop and milk store.*—Every occupier of a milk store or shop shall cause every part of the interior to be thoroughly cleansed from time to time and as often as may be necessary to maintain it in a thorough state of cleanliness.

24. *Health and inspection of milch animals in dairies.*—The Commissioners shall cause to be made such inspections of dairy cattle as may be necessary.

25. *Cleanliness of milk vessels.*—Every cow-keeper or dairyman shall from time to time and as often as may be necessary cause every milk vessel that may be used by him for the sale, conveyance or storage of milk to be thoroughly cleansed with steam or clean boiling water and shall otherwise take all proper precautions for the maintenance of such milk vessel in a constant state of cleanliness.

On every occasion when any such vessel shall have been used to contain milk or shall have been returned to him after having been out of his possession, he shall cause such vessel to be forthwith so cleansed.

26. *Protection of milk against infection or contamination.*—Every purveyor, seller or retailer of milk shall take all reasonable and proper precaution in connection with the storage and distribution of milk and otherwise to prevent exposure of milk to any infection or contamination.

27. No purveyor, seller or retailer of milk shall deposit or keep any milk intended for sale—

(*a*) in any room or place where it would be liable to become infected or contaminated by impure air or by any offensive, noxious or deleterious gas or substance or by any noxious or injurious emanation, exhalation or effluvium;

(*b*) in any room used as a kitchen or living room;

(*c*) in any room or building or part of a building communicating directly by door, window or otherwise with any room used as a sleeping room or with a water-closet, earth-closet, privy, cesspool or receptacle for ashes or with a room in which there may be any person suffering from an infectious or dangerous disease or which may have been used by any person suffering from any such disease and may not have been properly disinfected; or

(*d*) in any room or building or part of a building in which there is any untrapped inlet to any drain.

28. No cow-keeper or dairyman shall allow any milch cattle belonging to him or under his care or control to be milked for the purpose

of obtaining milk for sale unless at the time of milking—

(*a*) the udder and teats of such cow are thoroughly clean; and

(*b*) the hands of the person milking such animals also are thoroughly clean and free from all infection and contamination.

29. All dirt shall be removed from the flanks of the cattle before milking is begun, and every person engaged in milking shall keep his body and clothing clean.

30. The floor of every milk store or milk shop shall be rendered impervious and sloping to a channel, so constructed as to prevent any liquid matter from accumulating; and to lead it directly to a drain outside the building.

31. The owner of a milk store or shop shall cleanse as often as necessary all fittings, floors and furniture.

32. No dairyman or seller of milk shall sell infected or contaminated milk, or milk suspected to be infected or contaminated.

33. No cow-keeper or dairyman shall keep in the shed in which the cattle are milked any animal the milk from which there is reason to believe has conveyed or is likely to convey any infectious disease.

34. It shall be lawful for the Commissioners to close, for such period as they may think fit, a dairy from which infected or contaminated milk is supplied for sale.

35. *Penalty.*—The penalty for the breach of any of the by-laws 3 to 22 and 25 to 33 shall be a fine which may extend to fifty rupees and when the breach is a continuing one, with a further fine not exceeding five rupees for every day after the date of first conviction during which the offender persists in the offence.

Hooghly.—No. 6345M.—17th August 1936. —In exercise of the power conferred by clause (*g*) of sub-section (*1*) of section 6 of the Bengal Municipal Act, 1932 (Bengal Act XV of 1932), and in modification of notification, dated the 15th December 1877, the Government of Bengal (Ministry of Local Self-Government) are pleased to declare their intention that the boundaries of the Bansberia Municipality shall be as follows:—

North—Demra (jurisdiction list No. 24), Benipur (jurisdiction list No. 34), Hazipur (jurisdiction list No. 33).

East—By the river Hooghly from the southern boundary of the mauza Hazipur up to eastern boundary of plot No. 1835 of Keota mauza (jurisdiction list No. 7).

South—A line running by the southern boundary of plot Nos. 1835, 1811, 1762, 1761, 1760, 1759, 1758, 1757, 1756, 1755, 1754, 1773 and 1329 of mauza Keota, then turning towards the north by the western boundary of plot Nos. 1331, 1332, 1333, 1335, 1337 and 1338, then to the west by the southern boundary of plot No. 1342, thence towards the south by the eastern boundary of plot No. 1344, thence again to the west by the southern boundary of plot Nos. 1344, 1347, 1346 and 1312, thence to the north by the western boundary of plot Nos. 1312 and 1304, thence to the west by the southern boundary of plot Nos. 1304, 1215, 1214 and 1209, thence to the north by the western boundary of plot No. 1208, then to the west by the southern boundary of plot Nos. 1207, 1216 and 1201 and towards the north by the western boundary of plot No. 1201 (all the aforesaid plots being of mauza Keota, jurisdiction list No. 7), thence turning towards the west by the southern boundary of plot No. 2254 of Khamarpara mauza (jurisdiction list No. 7/22), thence to the north by the western boundary of plot Nos. 2254 and 2253 of Khamarpara mauza, thence towards the west by the southern boundary of plot No. 2252, then turning first towards the north and then towards the east by the western and northern boundaries respectively of plot No. 2252 of Khamarpara mauza, then towards the north by the western boundary of plot Nos. 2250, 2251, 2230 and 2229 of Khamarpara mauza, then towards the west by the southern boundary of plot Nos. 2228 and 2227 and then towards the north by the western boundary of plot Nos. 2227, 2226 and 2225 of Khamarpara mauza, thence by the southern boundary of plot No. 2261 of Khamarpara mauza, thence by the western boundary of plot No. 2203 of Khamarpara mauza, thence by the southern and western boundaries of plot Nos. 2202, 2201, 2127, 2126, 2125 and 2124 of Khamarpara mauza and the southern boundary of plot No. 2101 of Khamarpara mauza (jurisdiction list No. 7/22).

West—Western boundary of plot Nos. 2101, 512, 511 and 510 of Khamarpara mauza, then turning towards the west by the southern boundary of plot No. 2201 of mauza Bansberia (jurisdiction list No. 53) and western boundary of plot Nos. 2201 and 1862 of the same mauza.

Chalk Bansberia (jurisdiction list No. 52) excepting the portion lying to the east of the western boundary of plot No. 1001 of mauza Chalk Bansberia, jurisdiction list No. 52.

Sankhanagore (jurisdiction list No. 38).

Gazghanta (jurisdiction list No. 41).

Amadghata (jurisdiction list No. 40) excepting plot No. 1255.

Joypore (jurisdiction list No. 22).

Dadpore (jurisdiction list No. 23).

2. If any rate-payer of the said municipality objects to anything contained in this notification he shall submit his objection in writing to the undersigned through the District Magistrate and the Divisional Commissioner within three months from the date of the publication of this notification.

24-Parganas.—No. 6354M.—17th August 1936.—The following draft of by-laws, which has been framed by the Commissioners of the Baranagar Municipality, in the district of the 24-Parganas, under section 375 (*a*) of the Bengal Municipal Act, 1932 (Bengal Act XV of 1932), and which the Government of Bengal (Ministry of Local Self-Government) propose to confirm under section 506 of the Act, is published for the information of persons likely to be affected thereby.

2. The draft will be taken into consideration on the 2nd November 1936, and any objection or suggestion received by the undersigned through the District Magistrate and the Divisional Commissioner before that date will be duly considered :—

Draft by-laws.

I.—By-laws under clause (a) of section 375 of the Bengal Municipal Act, 1932, for the regulation of conduct of business in places used for the purposes mentioned in clauses (i) (ii) and (v) of sub-section (1) of section 370.

1. The licensee shall connect all drains in the place licensed under section 370 intended for the discharge of foul water with a municipal sewer, and the licensee shall not allow any foul water or refuse matter from such place to be discharged into a river, or channel, or any other reservoir of water intended for bathing, drinking or any other domestic purpose.

2. Where there is no sewer, the licensee shall collect the waste water from a place licensed under section 370 in properly constructed cesspools. Such cesspools shall be periodically cleansed or treated by the licensee in such a way as to render them inoffensive by activated sludge process or the contents thereof shall be otherwise disposed of in such manner as may be required by the Sanitary Inspector, Health Officer, or Chairman.

3. The licensee shall arrange for sufficient supply of water for cleansing the place licensed under section 370.

4. The licensee shall not cause or suffer any skin or hide which by reason of decomposition has become useless for the purpose of leather dressing, to be kept for a longer time than may be necessary in any part of the place licensed under section 370.

5. The licensee shall, at the close of every working day, cause every floor or pavement in the place licensed under section 370 to be thoroughly swept and washed. He shall, at the same time, cause all filth or refuse deposited on the floor or pavement of such place to be collected in suitable vessels or receptacles furnished with closely fitting covers and to be forthwith removed therein from the place.

6. The licensee shall cause the supply of water in every tank or other receptacle used upon the place licensed under section 370 for the washing or soaking of any skin or hide and not being a liming pit to be renewed as often as may be necessary to prevent the emission of noxious or injurious effluvia from the contents of the tank or other receptacles.

He shall cause every such tank or other receptacle to be furnished with a suitable cover and to be kept covered unless it is required to be kept open.

He shall cause every part of the tank or other receptacle, when emptied, to be thoroughly cleansed and shall cause all filth which has been removed therefrom to be forthwith conveyed from the place licensed under section 370 in suitable vessels or receptacles furnished with closely fitting covers, for disposal in a manner approved by the Commissioners.

7. The licensee shall cause all waste lime which has been taken out of any pit upon the place licensed under section 370 to be forthwith deposited in suitable vessels or receptacles or in a properly constructed cart or carriage which, when filled or loaded, shall be covered in such a manner as to prevent the emission of noxious or injurious effluvia from the contents thereof, and shall with all reasonable despatch be removed from the said place for deposit in a place fixed by the Commissioners or disposal in a manner approved by the Commissioners.

8. The licensee shall cause every beam, table, bench, knife, hammer or other implement or apparatus used upon the place licensed under section 370 for the purpose of unhairing, fleshing, breaking, scrapping, rounding, scudding or stocking any hide, butt or pelt or in any other process of his trade, to be cleansed from time to time as often as may be necessary to prevent any accumulation of filth upon the beam, table, bench, knife, hammer, implement, or apparatus.

9. The licensee shall cause all filth which has been splashed upon any part of the internal surface of any wall of any building upon the place licensed under section 370 to be removed by scraping or by some other effectual means of cleansing at least twice in every year, that is to say, at least once during each of the periods between the first and twenty-first day of March and the first and twenty-first day of September. He shall at the same time cause every part of the internal surface above the floor or pavement of the building to be thoroughly washed with hot limewash :

Provided (*i*) that the foregoing requirements as to limewashing shall not apply to any part of the internal surface of any building which is painted or covered with impervious material and may be otherwise properly cleansed and (*ii*) that this by-law shall not apply to any part of any such building which is used only for the storage of dry leather.

10. The licensee shall cause any part of the internal surface of the walls of any building and every floor or pavement upon the place licensed under section 370 to be kept at all times in good order and repair so as to prevent the absorption therein of any liquid filth or refuse or any noxious or injurious matter which may be splashed or may fall or be deposited thereon.

11. The licensee shall cause every part of the interior and exterior of every tub or other vessel or receptacle used upon the place licensed under section 370 to hold a solution of the material known as "puer" to be thoroughly cleansed by scrubbing or by some other effectual means once at least in every week.

12. In a place licensed under section 370 in which the fleshing meat is dried for subsequent sale for the manufacture of such articles as glue or jujubes, the licensee shall cover the drying area by wire netting so as to prevent carrion birds from carrying away the material and dropping it in the vicinity of inhabited areas.

13. A breach of any of the provisions of by-laws 1 to 12 shall be punishable with fine which may extend to fifty rupees and when the breach is a continuing one, with a further fine which may extend to five rupees for every day after the date of first conviction during which the offender is proved to have persisted in the offence.

II.—By-laws under clause (a) of section 375 of the Bengal Municipal Act, 1932, for the regulation of conduct of business in places used for the purposes mentioned in clauses (iii), (iv), (vi) and (vii) of sub-section (1) of section 370.

1. The licensee shall not use or allow to be used any portion of a place licensed under section 370, for residential or sleeping purposes, nor shall use or allow to be used any room within a building, in such place as a living or sleeping room, unless it is separated from the remaining portion of the said place by a substantial wall and contains a window opening directly to the sky and of dimensions not less than one-tenth of the superficial area of the room.

2. The licensee shall not employ any person suffering from any contagious or infectious disease at the place licensed under section 370.

3. The licensee shall store all materials which have been received on the place licensed under section 370 and which are not required for immediate use in the trade in such a manner and in such a condition as to prevent the emission of noxious or injurious effluvia therefrom.

4. The licensee shall thoroughly cleanse and wash at the close of every working day all floors or pavements in the place licensed under section 370 and shall collect all fragments of gut or other matter detached in the process of scraping and all garbage, filth or other offensive matter and place them in suitable vessels or receptacles to be forthwith removed with their covers affixed from the said place to a safe place of disposal appointed by the Commissioners or to be disposed of in a manner approved by the Commissioners. Each such vessel shall be constructed of galvanised iron or of some other non-absorbent material and furnish with a closely fitted cover and shall contain a sufficient quantity of a deodorant solution.

5. The licensee shall at the close of every working day thoroughly cleanse with water containing a deodorant every bench, table, tub, vessel, utensil or implement which has been in use during the day in the place licensed under section 370.

6. The licensee shall at the close of every working day remove by scraping or other effectual means all filth or refuse which has been splashed upon any inside portion of the place licensed under section 370.

7. The licensee shall keep every vessel or receptacle in a place licensed under section 370 thoroughly clean even when such vessel or receptacle is not in use.

8. The licensee shall adopt the best practicable means for rendering innocuous all gas or vapour emitted during any trade process either from the articles operated upon or from the contents of any cask, tank, vat, pan, trough or other receptacle upon the place licensed under section 370.

9. The licensee shall thoroughly wash within each first ten days of March, June, September and December of every year the interior of the place licensed under section 370 above the floor or pavement with hot limewash if such place has been in use since the last occasion on which it was so washed:

Provided that this by-law shall not apply to any part of such place as is covered with impervious material, in which case it shall be sufficient thoroughly to cleanse the same by washing with water.

10. The licensee shall not allow facility for the absorption of any liquid filth, refuse or other noxious or injurious matter in the interior of a place licensed under section 370 by reason of want of repair to the surface thereof.

11. The licensee shall adopt all appliances or means which the Commissioners may from time to time require for the purpose of preventing, abating, or minimising any nuisance or annoyance to the neighbourhood or to the public from the use to which a place licensed under section 370 is put and shall at all times maintain them in good and efficient order.

12. The licensee shall trap and connect the drains in a place licensed under section 370 with sewers with the consent of the Commissioners. Where there are no sewers or where permission to connect drains with the existing sewers has been refused by the Commissioners the licensee shall collect waste water from such place in properly constructed cesspools. These should be periodically cleansed and the contents thereof treated in a manner to render them inoffensive or in such other way as the Commissioners may require before disposal in the way recommended by them.

13. A breach of any of the provisions of by-laws 1 to 12 shall be punishable with fine which may extend to fifty rupees and when the breach is a continuing one, with a further fine which may extend to five rupees for every day after the date of the first conviction during which the offender is proved to have persisted in the offence.

III.—By-laws under clause (a) of section 375 of the Bengal Municipal Act, 1932, for the regulation of conduct of business in places used for dyeing mentioned in clause (viii) of sub-section (1) of section 370.

1. The licensee shall not use any part of a place licensed under section 370 for residential or sleeping purposes, nor shall use any room within a building in such place as a living or sleeping room, unless it is separated from the remaining portion of such place by a substantial wall and contains a window opening directly to the sky and of dimensions not less than one-tenth of the superficial area of the room.

2. The licensee shall not employ any person suffering from any contagious or infectious disease on a place licensed under section 370.

3. The licensee shall store all materials which have been received on the place licensed under section 370 and which are not required for immediate use in the trade in such a manner and in such a condition as to prevent the emission of noxious or injurious effluvia therefrom.

4. The licensee shall thoroughly cleanse and wash at the close of every working day all floors or pavements in the place licensed under section 370 and shall collect all residual waste or other offensive matter and place them in suitable vessels or receptacles to be forthwith removed, with their covers affixed, from the said place to a place of disposal appointed by the Commissioners or to any safe place for deposit, wherefrom the same shall subsequently be removed by the Commissioners for disposal.

5. The licensee shall adopt the best practical means for rendering innocuous all vapour emitted during any trade process either from the articles operated upon or from the contents of any cask, tank, vat, pan or other receptacles upon the place licensed under section 370.

6. The licensee shall keep at all times all floors and pavements in a place licensed under section 370 in good order and repair so as to prevent the absorption of any liquid filth or refuse or any noxious or injurious matter which may fall or be deposited thereon.

7. The licensee shall keep the dyeing ground and all the ground surface of the place licensed under section 370 smooth and free from hollows or inequalities so as to prevent any accumulation thereon of any liquid filth or refuse.

8. The licensee shall maintain at all times every drain or means of drainage upon or in connection with the place licensed under section 370 in good order and efficient condition. The licensee shall trap and connect drains of dyeing houses in the said place with sewers with the consent of the Commissioners. Where there are no sewers or where the permission to connect drains with the existing sewers has been refused by the Commissioners, the licensee shall collect the waste water from such place in properly constructed cesspools. These should be periodically cleansed and the contents thereof treated in a manner to render them inoffensive or in such other way as the Commissioners may require before disposal in the way recommended by them.

9. The licensee shall provide air-tight lids or covers for every tank, cask or other receptacle, whether in daily use or not, kept for the purpose of dyeing in place licensed under section 370. All such receptacles should be covered with air-tight lids overnight so that mosquitoes may not have the chance of gaining entrance into the receptacles.

10. Whenever dyeing is temporarily suspended the licensee shall fill all unused pots in a place licensed under section 370 with sand and shall cover them with mull or gauze tied tightly round their necks to prevent mosquito breeding in them during the period of such suspension.

11. The licensee shall keep every vessel or receptacle in a place licensed under section 370 thoroughly clean even when such vessel or receptacle is not in use.

12. The licensee shall thoroughly wash within each first ten days of March, June, September and December of every year the interior of the place licensed under section 370 above the floor or pavement with hot limewash if such place has been in use since the last occasion on which it was so washed:

Provided that this by-law shall not apply to any part of such place as is covered with impervious material, in which case it shall be sufficient thoroughly to cleanse the same by washing with water.

13. The licensee shall adopt all appliances or means which the Commissioners may from time to time require for the purpose of preventing, abating, or minimising any nuisance or annoyance to the neighbourhood or to the public from the use to which a place licensed under section 370 is put, and shall at all times maintain them in good and efficient order.

14. A breach of any of the provisions of by-laws 1 to 13 shall be punishable with fine which may extend to fifty rupees and, when the breach is a continuing one, with a further fine which may extend to five rupees, for every day after the date of the first conviction, during which the offender is proved to have persisted in the offence.

IV.—By-laws under clause (a) of section 375 of the Bengal Municipal Act, 1932, for the regulation of conduct of business in places used for the purposes mentioned in clause (IX) of sub-section (1) of section 370.

1. The licensee shall see that a place licensed under clause (*ix*) of sub-section (*1*) of section 370 has sufficient room therein for the loading or unloading of materials.

2. A breach of any of the provisions of the by-law shall be punishable with a fine which may extend to fifty rupees, and when the breach is a continuing one, with a further fine which may extend to five rupees for every day after the date of the first conviction during which the offender is proved to have persisted in the offence.

Executive Instructions.

1. Any license granted under clause (*ix*) of section 370(1) may impose such conditions as in the opinion of the Commissioners appear necessary for the safety or convenience of the public or any portion of the public.

2. Every application for the grant of a license under these by-laws shall contain full particulars of the situation and boundary of the place for which the license is required and of the materials for which the license is required. An application for renewal shall be accompanied by the license to be renewed.

V.—By-laws under clause (a) of section 375 of the Bengal Municipal Act, 1932, for the regulation of conduct of business in places used for the purposes mentioned in clause (XI) of sub-section (1) of section 370.

1. The licensee shall not store in any place licensed under clause (*ix*) of sub-section (1) of section 370 kerosine, petroleum, naphtha, or any inflammable oil or spirit in excess of the following quantities, namely:—

Petroleum.—Maximum quantity 12 gallons; provided that petroleum is contained in closed tins, drums or bottles.

Naphtha.—Maximum quantity 1 quart.

Spirit.—Maximum quantity 2 gallons.

Other inflammable oil.—Such quantities as the Commissioners may from time to time prescribe; provided that such quantity shall not be in excess of the quantity prescribed under the Indian Petroleum Act, 1899.

2. The licensee shall not store other goods of a combustible nature in a place licensed under clause (*xi*) of sub-section (1) of section 370 for the storage of petroleum.

3. The licensee shall not open a cask or other receptacle containing petroleum nor shall draw off the oil inside the place in which petroleum is stored.

4. The licensee shall not permit smoking nor introduce any artificial light or fire, in any form, within the place licensed under clause (*xi*) of sub-section (1) of section 370.

5. The licensee shall keep all petroleum stored in a place licensed under clause (*xi*) of sub-section (1) of section 370 in properly sealed tins, drums or casks and if any tin, drum or cask be opened, shall close it securely again in such a manner that no vapour may be given off.

6. The licensee shall see that the place used for the storage of petroleum is properly ventilated.

7. The licensee shall keep in stock ready for use sufficient number of fire extinguishers and also dry sand in such quantity proportionate to that of the inflammable articles stored as the Commissioners may direct, ready for use in case of any accidential outbreak of fire.

8. A breach of any of the provisions of the by-laws 1 to 7 shall be punishable with a fine which may extend to fifty rupees, and when the breach is a continuing one, with a further fine which may extend to five rupees for every day after the date of the first conviction during which the offender is proved to have persisted in the offence.

VI.—By-laws under clause (a) of section 375 of the Bengal Municipal Act, 1932, for the regulation of the conduct of business in places used for the purposes mentioned in clause (XII) of sub-section (1) section 370.

1. The licensee shall not store more than 1,000 maunds of hay, straw, wood, thatching grass, jute or other dangerously inflammable material in one place under a license issued under clause (*xii*) of sub-section (1) of section 370.

2. The licensee shall see that the area of the place to be used for storing hay, straw, wood, thatching grass, jute or other dangerously inflammable material is as follows:—

Minimum area.		Maximum quantity of hay, etc., to be stored. Mds.
100 square yards	...	50
150 square yards	...	100
200 square yards	...	400
500 square yards	...	1,000

3. The licensee shall provide a source of water close by if within 500 feet of any place used for storing hay, straw, wood, thatching grass, jute or other dangerously inflammable materials, there is a place for the storage of petroleum or cloth or articles made of jute or cotton.

4. The licensee shall provide sufficient room in a place licensed under clause (*xiii*) of sub-section (1) of section 370 for the loading and unloading of materials.

5. The licensee shall leave a clear space of at least five feet between the inflammable material and the nearest walls of any building.

6. The licensee shall enclose by a fence or wall the space occupied by inflammable materials and he shall not permit any person to reside within 10 feet of any stack.

7. The licensee shall not permit any person to smoke, introduce any light into or ignite any substance in any place licensed under clause (*xii*) of sub-section (1) of section 370.

8. The licensee shall keep one *ghara* or *balti* filled with water for every five maunds of inflammable materials which he is permitted to store:

Provided that no such licensee shall be required to keep more than 50 *gharas* or *baltis* under this by-law.

9. No licensee shall stack any inflammable material to a height exceeding 15 feet.

10. A breach of any of the provisions of by-laws 1 to 9 shall be punishable with a fine which may extend to firty rupees and when the breach is a continuing one with a further fine which may extend to five rupees for every day after the date of first conviction during which the offender is proved to have persisted in the offence.

No. 6337L.S.-G.—17th August 1936.—The following draft of an amendment which, in exercise of the power conferred by clause (*a*) of section 138 of the Bengal Local Self-Government Act of 1885 (Bengal Act III of 1885), the Government of Bengal (Ministry of Local Self-Government) propose to make in the rules published with notification, dated the 15th December 1885, as subsequently amended, is published for the information of persons likely to be affected thereby.

2. The draft will be taken into consideration on or after the 12th October 1936, and any objection or suggestion which may be received by the undersigned before that date through the District Magistrates will be duly considered:—

Draft amendment.

For rule 48, *substitute* the following:—

"48. The names of the elected numbers of the local board shall be forwarded to the local Government for publication in the *Calcutta Gazette* together with the names or official designation, if any, of the appointed members."

Hooghly.—No. 6305L.S.-G.—14th August 1936.—In exercise of the power conferred by section 22 of the Local Self-Government Act, 1885 (Bengal Act III of 1885), the Government of Bengal (Ministry of Local Self-Government) are pleased to approve the election, by the members of the Hooghly district board, of Babu Tarak Nath Mukherjee, B.SC., to be their Chairman.

CORRIGENDA.

No. 6323M.—17th August 1936.—In notification No. 3190M., dated the 16th July 1934, published at page 1068 of Part I of the *Calcutta Gazette*, dated the 26th July 1934, *for* "The District Engineer, Headquarters, East Indian Railway" *substitute* "The Superintendent, Way and Works, East Indian Railway, Howrah."

Faridpur.—No. 6343L.S.-G.—17th August 1936.—In column 2 of the table showing the mauzas constituting the Char Madhabdia union board appended to notification No. 4168-L.S.-G., dated the 7th December 1926, published at page 1898 of Part I of the *Calcutta Gazette*, dated the 16th December 1926, and subsequently amended by the addendum No. 2518L.S.-G., dated the 20th April 1936, *read* 87 Sheikdeea—2465 *for* 87 Sheikdeea—3465.

Medical.

Minister-in-charge: The Hon'ble Sir Bijoy Prasad Singh Roy, Kt.

Dacca-Calcutta. — No. 3251Medl. — 11th August 1936.—Dr. J. A. Hyde, I.M.D., L.R.C.P., L.R.C.S. (Edin.), L.R.F.P. & S. (Glas.), Deputy Superintendent, Mitford Hospital, Dacca, is posted as House Surgeon, Presidency General Hospital.

Calcutta.— No. 3252Medl. —11th August 1936.—Dr. Satipati Goswami, officiating House Surgeon, Presidency General Hospital, on relief, is placed on supernumerary duty at the Medical College Hospitals, Calcutta.

Dinajpur-Dacca.— No. 3253Medl. — 11th August 1936.—Dr. Charu Chandra Banerji of the Sadar Hospital, Dinajpur, on relief, is appointed as Deputy Superintendent, Mitford Hospital, Dacca, *vice* Dr. J. A. Hyde, I.M.D., transferred.

Mymensingh-Dinajpur. — No. 3254Medl. —11th August 1936.—Dr. Nawab Ali, M.B., D.T.M., of the Kishorganj subdivision and dispensary, district Mymensingh, on relief, is posted to the Sadar Hospital, Dinajpur, *vice* Dr. Charu Chandra Banerji, transferred.

Rajshahi-Mymensingh.— No. 3255Medl.— 11th August 1936.—Dr. Manmatha Nath Chatterji, Medical Officer, Government Hostels, Rajshahi, in relief, is posted to the Kishorganj subdivision and dispensary, district Mymensingh, *vice* Dr. Nawab Ali.

2. This cancels notifications Nos. 1505-Medl. and 1506 Medl., dated the 18th March 1936.

No. 3260Medl. —11th August 1936. — Lt.-Col. B. H. Singh, M.C., I.M.S., is granted leave on average pay for the period from the 12th May to the 27th August 1936, under rule 81 (*b*) (*ii*) of the Fundamental Rules.

This cancels notification No. 99T. Medl., dated the 13th May 1936.

Public Health.

NOTIFICATIONS.

Calcutta-Chittagong. — No. 3251P.H.— 18th August 1936.—It is hereby notified for general information that Bassein has been declared free from cholera, and that the regulations for the prevention of the introduction of cholera by sea, which were imposed in the ports of Calcutta and Chittagong against vessels arriving from Bassein, are hereby withdrawn.

Minister-in-charge: The Hon'ble Sir Bijoy Prasad Singh Roy, Kt.

No. 3209P.H.—15th August, 1936.—The following draft of an amendment, which the Government of Bengal (Ministry of Public Health) intend to make; in exercise of the power conferred by section 20 of the Bengal Food Adulteration Act, 1919 (Bengal Act VI of 1919), in the rule published under notification No. 1977P.H., dated the 24th July 1930, is published for the information of persons likely to be affected thereby.

II. The draft will be taken into consideration on the 1st October 1936, and any objection or suggestion which is received by the undersigned through the District Magistrate before that date will be duly considered:—

Draft Amendment.

For rule 4 substitute the following:—

"4. The fee to be charged by a public analyst for analysing articles of food under this Act shall be Rs. 4 per sample if sent by a local authority, Rs. 8 per sample if sent by any other person."

G. S. DUTT,
Secy. to the Govt. of Bengal.

EDUCATION DEPARTMENT.

NOTIFICATIONS.

Minister-in-charge: The Hon'ble Khan Bahadur M. Azizul Haque.

Bakarganj.—No. 2715Edn.—13th August 1936.—Babu Surendra Nath Chatterjee, Assistant Head Master, Barisal Zilla School, is appointed to act in the Bengal Educational Service as Head Master of the School, with effect from the 14th August 1936, or any subsequent date on which he assumes charge, during the absence, on leave, of Khan Sahib Maulvi Serajuddin Ahmed, or until further orders.

Rajshahi.—No. 2763Edn. — 15th August 1936.—Babu Satyendra Nath Ray, officiating Professor of Physics, Rajshahi College, is appointed substantively to the post and in the Bengal Educational Service, with effect from 1st April 1935.

Calcutta.—No. 2766Edn. — 17th August 1936.—The Government of Bengal (Ministry of Education) are pleased to order that Governing Body of the Government School of Art, Calcutta, which functioned up to the end of June 1936, in terms of notification No. 4181Edn., dated the 30th November 1935, should continue to hold office till the end of December 1936.

Registration.

NOTIFICATIONS.

Minister-in-charge: The Hon'ble Khan Bahadur M. Azizul Haque.

Mymensingh.—No. 512Regn.—14th August 1936.—In exercise of the power conferred by section 3 of the Bengal Muhammadan Marriages and Divorces Registration Act, 1876 (Bengal Act I of 1876), the Government of Bengal (Ministry of Education) are pleased to appoint Maulvi Muhammad Mahmood to be a Muhammadan Registrar within the police-station of Austogram, unions Nos. IX to XI of police-station Itna and Nos. I to IV of police-station Nikli, in the district of Mymensingh.

Mymensingh.—No. 513Regn.—14th August 1936.—In exercise of the power conferred by section 2 of the Kazis Act, 1880 (Act XII of 1880), the Government of Bengal (Ministry of Education) are pleased to appoint Maulvi Muhammad Mahmood to be the Kazi for the celebration of marriages and the performance of other rites and ceremonies within the police-station of Austogram, unions Nos. IX to XI of police-station Itna and Nos. I to IV of police-station Nikli, in the district of Mymensingh.

Mymensingh.—No. 516Regn.—14th August 1936.—In exercise of the power conferred by section 3 of the Bengal Muhammadan Marriages and Divorces Registration Act, 1876 (Bengal Act I of 1876), the Government of Bengal (Ministry of Education) are pleased to appoint Maulvi Saiyid Abul Hossain Muhammad Ali, to be a Muhammadan Registrar within the police-station of Bajitpur and unions Nos. V to IX of police-station Nikli, in the district of Mymensingh.

Mymensingh.—No. 517Regn.—14th August 1936.—In exercise of the power conferred by section 2 of the Kazis Act 1880 (Act XII of 1880), the Government of Bengal (Ministry of Education) are pleased to appoint Maulvi Saiyid Abul Hossain Muhammad Ali to be the Kazi for the celebration of marriages and the performance of other rites and ceremonies within the police-station of Bajitpur and unions Nos. V to IX of police-station Nikli, in the district of Mymensingh.

Mymensingh.—No. 520Regn.—14th August 1936.—In exercise of the power conferred by section 3 of the Bengal Muhammadan Marriages and Divorces Registration Act, 1876 (Bengal Act I of 1876), the Government of Bengal (Ministry of Education) are pleased to appointment Maulvi Abdul Mannan Bhuiyan temporarily to be a Muhammadan Registrar within unions Nos. I to VIII of the police-station of Itna, in the district of Mymensingh.

Mymensingh.—No. 521Regn.—14th August 1936.—In exercise of the power conferred by section 2 of the Kazis Act, 1880 (Act XII of 1880), the Government of Bengal (Ministry of Education) are pleased to appoint Maulvi Abdul Mannan Bhuiyan temporarily to be the Kazi for the celebration of marriages and the performance of other rites and ceremonies within unions Nos. I to VIII of the police-station of Itna, in the district of Mymensingh.

Rangpur.—No. 526Regn. — 17th August 1936.—Maulvi Mir Saiyid Ali, District Sub-Registrar of Rangpur, is allowed leave on average pay for two months, with effect from the 6th August 1936, under rule 81 (*b*) (*ii*) of the Fundamental Rules.

H. GRAHAM,

Secy. to the Govt. of Bengal.

Orders by the Inspector-General of Registration, Bengal.

24-Parganas - Khulna. — No. 471.—13th August 1936.—Babu Sukumar Chakrabutti, Sub-Registrar attached to the Sadar Registration office at Alipore, 24-Parganas, officiating as Sub-Registrar of Kaliganj, in the district of Khulna, is allowed leave on average pay for four weeks, with effect from the 17th July 1936.

Bakarganj.—No. 472.—14th August 1936.—Maulvi A. K. M. Fakaruddin Ahmed, Sub-Registrar of Bakarganj (Shahibganj), in the district of Bakarganj, is appointed to be Sub-Registrar of Barhanuddin Havildar's Hat (Kaliganj) in the same district.

Bakarganj.—No. 473.—14th August 1936.—Maulvi Serajul Haq Chaudhuri, Sub-Registrar of Barhanuddin Havildar's Hat (Kaliganj), in the district of Bakarganj, is appointed to be Sub-Registrar of Bakarganj (Sahibganj) in the same district.

Bakarganj.—No. 474.—14th August 1936.—Maulvi Afiluddin Ahmed, Sub-Registrar of Amtali, in the district of Bakarganj, is allowed leave on average pay for one month, under rule 81 (*b*) (*ii*) of the Fundamental Rules, with effect from the 10th August 1936.

Bakarganj.—No. 475.—14th August 1936.—Maulvi Habiluddin Ahmed, probationary Sub-Registrar, attached to the Sadar Registration office at Barisal, in the district of Bakarganj, is appointed to act as Sub-Registrar of Amtali in the same district, with effect from the 10th August 1936, during the absence, on leave, of Maulvi Afiluddin Ahmed, Sub-Registrar, or until further orders.

24-Parganas.—No. 476.—14th August 1936.—Maulvi Saiyid Mustafa Ali, Sub-Registrar of Basirhat, in the district of the 24-Parganas, is allowed leave on average pay for fourteen days, under rule 81 (*b*) (*ii*) of the Fundamental Rules, in extension of the leave granted to him in this department notification No. 288, dated the 19th May 1936.

24-Parganas.—No. 477.—14th August 1936.—Babu Kshitish Chandra Gupta, Sub-Registrar of Baduria, in the district of the 24-Parganas, is allowed leave on average pay for three weeks, under rule 81(*b*)(*ii*) of the Fundamental Rules, in extension of the leave granted to him in this department notification No. 424, dated the 18th July 1936.

S. CHATTERJEA,

Inspector-General of Regn., Bengal.

COMMERCE DEPARTMENT.

NOTIFICATIONS.

No. 5709Com.—21st August 1936. — In exercise of the power conferred by section 26 of the Provident Insurance Societies Act, 1912 (V of 1912), the Governor in Council is pleased to exempt the Bengal-Nagpur Railway Employees' Mutual Benefit Fund from the provisions of section 3 of the said Act.

No. 5754Com.—13th August 1936.—In exercise of the power conferred by section 51 of the Indian Electricity Act, 1910 (IX of 1910), the Governor in Council is pleased to confer on the Calcutta Electric Supply Corporation, Ltd., the licensees of the Calcutta Electric License, 1907, for the purpose of laying an underground service cable in the private common passage leading to premises No. 23, Muktaram Row, Calcutta, situated within the area of supply of the said Corporation and for repairing the same whenever necessity arises, the powers which the telegraph authority possesses under sections 10 to 19 of the Indian Telegraph Act, 1885 (XIII of 1885), with respect to the placing of telegraph lines and posts for the purposes of a telegraph established or maintained by Government or to be so established or maintained. The exercise of the powers hereby conferred is subject to the provisions of the said Indian Telegraph Act, 1885.

E. N. BLANDY,
Secy. to the Govt. of Bengal.

Orders by the Registrar of Joint Stock Companies, Bengal.

Calcutta, the 10th August 1936.

In the matter of the Indian Companies Act, 1913 (VII of 1913), and in the matter of Brahma Carrying Co., Ltd.

Notice is hereby given that, on the expiration of three months from date, the name of Brahma Carrying Co., Ltd., will, unless cause is shown to the contrary, be struck off the register, and the company will be dissolved.

Calcutta, the 14th August 1936.

In the matter of the Indian Companies Act, 1913 (VII of 1913), and in the matter of the East India Soap and Chemical Works, Ltd.

Pursuant to the provisions of section 172(2) of the Indian Companies Act, 1913 (VII of 1913), notice is hereby given that an order was passed on the 9th September 1935 by the Hon'ble High Court of Judicature at Fort William in Bengal in its Ordinary Original Civil Jurisdiction under section 162 of the said Act for winding up East India Soap and Chemical Works, Ltd.

N. K. MAJUMDER,
Registrar of Companies under Act VII of 1913.

Calcutta, the 10th August 1936.

In the matter of the Indian Companies Act, 1913 (VII of 1913), and in the matter of Roy Chemical Works, Ltd.

Notice is hereby given that the name of Roy Chemical Works, Ltd., has this day, in pursuance of section 247 of the Act, been struck off the register and that the company is dissolved.

In the matter of the Indian Companies Act, 1913 (VII of 1913), and in the matter of Bengal Corporation, Ltd.

Notice is hereby given that the name of Bengal Corporation, Ltd., has this day, in pursuance of section 247 of the Act, been struck off the register and that the Company is dissolved.

In the matter of the Indian Companies Act, 1913 (VII of 1913), and in the matter of Kenduadih Coal Co., Ltd.

Notice is hereby given that the name of Kenduadih Coal Co., Ltd., has this day, in pursuance of section 247 of the Act, been struck off the register and that the company is dissolved.

In the matter of the Indian Companies Act, 1913 (VII of 1913), and in the matter of C. Deddes & Co., Ltd.

Notice is hereby given that the name of C. Deddes & Co., Ltd., has this day, in pursuance of section 247 of the Act, been struck off the register and that the company is dissolved.

N. K. MAJUMDER,
Registrar, Joint Stock Companies.

MARINE DEPARTMENT.

NOTIFICATIONS.

No. 24Mne. — 12th August 1936. — The following draft of a rule, which in exercise of the power conferred by clause (*j*) of sub-section (*2*) of section 52 of the Inland Steam Vessels Act, 1917 (I of 1917), the Governor in Council proposes to make to regulate the navigation of inland steam and motor vessels, is published, as required by section 74 of the Act, for the information of persons likely to be affected thereby.

The draft amendment will be taken into consideration on or after the 20th September 1936, and any objection or suggestion with regard thereto received by the undersigned before that date will be considered:—

Draft rule.

No inland steam or motor vessel shall anchor or dredge anchor within 50 yards on either side of the submarine electric cable laid across the river Dakatia (Chandpur Nala) in the district of Tippera between a point on the northern bank immediately west of the municipal waterworks jetty and a point on the southern bank alongside Messrs. R. Sim and Company's "B" premises the location of which is marked by a notice board on either bank.

No. 25Mne.—15th August 1936.—In exercise of the powers conferred by clause (*j*) of sub-section (2) of section 52 of the Inland Steam-Vessels Act, 1917 (I of 1917), the Governor in Council is pleased to make the following rules for regulating the navigation of inland steam-vessels in certain portions of the river Hooghly, in supersession of the rules published under this department notification No. 105Mne., dated the 4th August 1914:—

Rules.

1. Inland steam-vessels navigating the Hooghly between the Lower College Sand Buoy and Hospital Point shall be navigated on the shallow side of the channel when meeting ocean going vessels.

2. No inland steam-vessel other than a stern-wheeler, launch, tug or ferry steamer which has no other craft in tow, shall navigate the channel between the Lower College Sand Buoy and the Panchpara Crossing when ocean going vessels are under weigh and about to turn, either on the flood or ebb tide. Inland steam-vessels shall heave to on the College Sand, if they are above the ocean going steamers, and off the Lower Hughli Jute Mill, if they are below them, until such time as the ocean going steamers have completed the manoeuvre of turning round.

3. On Panchpara Crossing and in Sankral Reach, inland steam-vessels shall navigate on the edge of Sankral Sand.

4. In Jarmakers Reach, inland steam-vessels shall navigate on the edge of Munnikhali Sand.

5. In Kofree Reach, inland steam-vessels shall navigate on the edge of Kofree Sand.

6. In the upper part of Buj Buj Reach, inland steam-vessels shall navigate on the right bank of the river; in the lower part of Buj Buj Reach, they shall navigate on the edge of Buj Buj Sand.

7. In Buj Buj anchorage no inland steam-vessel other than a stern-wheeler, launch, tug or ferry steamer which has no other craft in tow, shall navigate the channel between the Fort Gloster Flat Buoy, and the Irrigation canal on the left bank of the river, when ocean going steamers are under weigh and about to turn, on either the flood or ebb tide.

8. At Poojali, Ulubaria or Achipur Reaches, inland steam-vessels shall navigate on the edge of the sand on the left bank of the river.

9. On Moyapore Bar, inland steam-vessels shall navigate the shallow tracks.

10. In Royapore Reach, inland steam-vessels shall navigate on the edge of Royapore Sand.

11. On Royapore Bar, inland steam-vessels shall navigate the shallow tracks.

12. In Brul Reach, inland steam-vessels shall navigate on the edge of Brul Sand.

13. In Fisherman's and Fulta Reaches, inland steam-vessels shall navigate on the edge of Fulta Sand.

14. In Nynan Reach, inland steam-vessels shall navigate on the edge of Shipgunge Sand.

15. In Nurpur Reach and in the vicinity of the James and Mary, inland steam-vessels shall navigate the Western Gut, and when obliged to use the Eastern Gut through insufficiency of water on the Western Gut, they shall navigate on the edge of Nurpur Sand and the Muckraputty Lumps.

16. From Hughli Point to Hospital Point, inland steam-vessels shall navigate the left bank of the river, and over the Hughli Sand.

17. From Hospital Point to the Northern entrance of the Rangafala Channel, inland steam-vessels shall navigate the left bank of the river.

18. When crossing from one Reach to another, inland steam-vessels shall not obstruct the passage of, or cause risk of collision with, any ocean going vessel which is using the crossing at the time, but shall slacken speed, stop or reverse, and if necessary, when going with the tide, turn head to tide until such time as the ocean going vessel has passed.

19. No inland vessel or flat shall anchor in any channel used by ocean going vessels, except in such a position as to offer no obstruction to such vessels.

20. When navigating the lighted channel between Garden Reach and Ulubaria at night, inland steam-vessels shall, when meeting or being over taken by ocean going vessels, conform to the same rules as those laid down for observance during the hours of day light; they shall offer no obstruction to the free passage of those vessels by crossing the channel, and shall, if necessary, ease, or stop.

21. When navigating the lighted channel between Garden Reach and Ulubaria at night, inland steam-vessels shall, on meeting or being overtaken by ocean going vessels, refrain from using their search-lights in such a manner as will interfere with the vision of those in charge of the navigation of such vessels.

22. Any person navigating or in charge of any inland steam-vessel in respect of which he commits a breach of any of these rules, shall be punishable with imprisonment for a term which may extend to six months, or with fine which may extend to five hundred rupees, or with both.

E. N. BLANDY,

Secy. to the Govt. of Bengal.

PUBLIC WORKS DEPARTMENT.

Establishment.

NOTIFICATIONS.

Minister-in-charge: The Hon'ble Nawab Sir Mohiuddin Faroqui, Kt., of Ratanpur.

No. 35.—10th August 1936.—Babu Ram Nath Chatterjee, Assistant Engineer, Darjeeling Division, on leave, is transferred, in the interest of the public service, to the City Division and posted, on return from leave, to No. IV Subdivision of that Division, *vice* Babu Sripada Ghose, Assistant Engineer, transferred.

No. 36.—10th August 1936.—Babu Sripada Ghose, Assistant Engineer, City Division, in the Presidency Circle, is transferred, in the interest of the public service, to the Eastern Circle.

No. 37.—12th August 1936.—The undermentioned officers are declared to have passed the Professional Examination prescribed in paragraph 82 of the Bengal Public Works Department Code, held on the 10th August 1936:—

(1) Mr. H. W. Irwin, Assistant Executive Engineer, Suburban Division.

(2) Mr. Abdul Motalib, Assistant Engineer, Darjeeling Division.

(3) Babu Amulya Ratan Banerjee, Assistant Engineer, Darjeeling Division.

H. S. E. STEVENS,

Secy. to the Govt. of Bengal.

IRRIGATION DEPARTMENT.

Establishment.

NOTIFICATION.

No. 10C.I.E.—10th August 1936.—Babu Angsujit Mukherji, Assistant Engineer, is granted, under rule 81 (*b*) (*ii*) of the Fundamental Rules, leave on average pay for fifteen days, with effect from the 22nd July 1936.

T. A. CURRY,

Chief Engr. to the Govt. of Bengal.

DEPARTMENT OF AGRICULTURE AND INDUSTRIES.

Veterinary.

NOTIFICATION.

Minister-in-charge: The Hon'ble Nawab Sir Mohiuddin Faroqui, Kt., of Ratanpur.

No. 5235Vety.—12th August 1936.—Mr. M. B. Menon, Veterinary Investigation Officer, Bengal, is appointed to act as Superintendent, Vaccine Depôt, Bengal, with effect from the 15th July 1936.

Miscellaneous.

NOTIFICATION.

Minister-in-charge: The Hon'ble Nawab Sir Mohiuddin Faroqui, Kt., of Ratanpur.

Calcutta.—No. 5208Mis.—11th August 1936.—Maulvi Molla Abdul Majid, Deputy Magistrate and Deputy Collector, is appointed as Assistant Secretary to the Government of Bengal in the Agriculture and Industries Department.

Forests.

NOTIFICATIONS.

Chittagong - Chittagong Hill Tracts.—No. 1049For.—14th August 1936.—In exercise of the powers conferred by sections 41, 42 and 76 of the Indian Forest Act, 1927 (XVI of 1927), the Governor in Council is pleased to make the following amendment in the rules to regulate the transit by land or water of all timber and other forest-produce within or from the districts of Chittagong and Chittagong Hill Tracts, issued under notification No. 12022For., dated the 1st November 1933:—

"In item No. 24 of rule 4 of the said rules in the column under the leading "station" *for* the word 'Karnafuli' *substitute* the word 'Chandraghona.'"

Darjeeling-Calcutta.—No. 1057For. —17th August 1936.—The headquarters of the Forest Utilisation Officer, Bengal, are transferred from Darjeeling to Calcutta with effect from the 25th May 1936.

His office will be located at 35, Gopalnagore Road, Alipore.

In consequence Mr. W. E. Hodge, Deputy Conservator of Forests, Forest Utilisation Officer, Bengal, is transferred, in the interest of public service, from Darjeeling to Calcutta.

H. S. E. STEVENS,
Secy. to the Govt. of Bengal.

REVENUE DEPARTMENT.

Land Revenue.

NOTIFICATIONS.

Mymensingh-Pabna.—No. 11709L.R.—17th August 1936.—In exercise of the powers conferred by section 115B of the Bengal Tenancy Act, 1885 (Act VIII of 1885), the Governor in Council is pleased to empower Babu Sarada Ranjan Datta Gupta, Sub-Deputy Collector and Assistant Settlement Officer, Mymensingh and Pabna, to make corrections in the record-of-rights prepared in respect of the lands in the districts of Mymensingh and Pabna, in accordance with, and subject to, the provisions of the said section.

Dinajpur.—No. 11718L.R.—17th August 1936.—Notification No. 8598L.R., dated the 12th June 1936, published at page 1446, Part I of the *Calcutta Gazette*, dated the 18th June 1936, granting leave to Babu Rai Mohan Samanta, Sub-Deputy Collector and Assistant Settlement Officer, Dinajpur, is hereby cancelled.

Rangpur.—No. 11795L. R.—18th August 1936.—In exercise of the powers conferred by sub-section (3) of section 158A of the Bengal Tenancy Act, 1885 (VIII of 1885), the Governor in Council is pleased to appoint for the purpose of that section Babu Saileswar Singha Roy, Sub-Deputy Collector and Certificate Officer, Kurigram, to perform the functions of a Certificate Officer under the Bengal Public Demands Recovery Act, 1913 (Bengal Act III of 1913), for the recovery of arrears of rents (including cesses) due to the estate of Khan Sahib Khairuddin Choudhury and others in the district of Rangpur.

Land Acquisition.

NOTIFICATIONS.

Birbhum.—No. 11596L.A. — 11th August 1936.—Whereas it appears to the Governor in Council that land is likely to be required to be taken by Government at the public expense for a public purpose, viz., for the extension of distributary No. 4 of the Bakreswar canal in the village of Chakbara, jurisdiction list No. 166, thana Suri, pargana Alinagar, district Birbhum, it is hereby notified that for the above purpose a piece of land comprising portions of cadastral plot Nos. 248, 251, 261, 262, 266, 267, 269, 272, 273, 277 to 279, 282, 285 and 384 to 386, and measuring, more or less, 0·52 of an acre, is likely to be required within the aforesaid village of Chakbara.

This notification is made, under the provisions of section 4 of Act I of 1894, to all whom it may concern.

A plan of the land may be inspected in the office of the Collector of Birbhum.

In exercise of the powers conferred by the aforesaid section, the Governor in Council is pleased to authorise the officers for the time being engaged in the undertaking, with their servants and workmen, to enter upon and survey the land and do all other acts required or permitted by that section.

Any person interested in the above land, who has any objection to the acquisition thereof, may, within thirty days after the date on which public notice of the substance of this notification is given in the locality, file an objection in writing before the Collector of Birbhum.

Burdwan.—No. 11598L.A. — 11th August 1936.—Whereas it appears to the Governor in Council that land is likely to be required to be taken by Government at the public expense for a public purpose, viz., for vehicle park at Raniganj Station, East Indian Railway, in the village of Raniganj, jurisdiction list No. 24, in thana Raniganj, pargana Shergarh, district Burdwan, it is hereby notified that for the above purpose a piece of land comprising cadastral survey plot No. 2906, and measuring, more or less, 0·143 of an acre, is likely to be required within the aforesaid village of Raniganj.

This notification is made, under the provisions of section 4 of Act I of 1894, to all whom it may concern.

A plan of the land may be inspected in the office of the Special Land Acquisition Officer, Burdwan, as well as in that of the Divisional Superintendent, East Indian Railway, Asansol.

In exercise of the powers conferred by the aforesaid section, the Governor in Council is pleased to authorise the officers for the time being engaged in the undertaking, with their servants and workmen, to enter upon and survey the land and do all other acts required or permitted by that section.

Any person interested in the above land, who has any objection to the acquisition thereof, may, within thirty days after the date on which public notice of the substance of this notification is given in the locality, file an objection in writing before the Collector of Burdwan.

Darjeeling.—No. 11600L.A.—11th August 1936.—Whereas it appears to the Governor in Council that land is likely to be required to be taken by Government at the expense of Messrs. Goenka & Co., for the construction of an aerial ropeway for the public carriage of goods and animals from the Darjeeling-Himalayan Railway goods shed, Darjeeling, to Bijanbari (Pulbazar) in Karmi Estate, through the area of Darjeeling Municipality, Government jail waste land, Stienthal Tea Estate, Happy Valley Tea Estate, Singtam Tea Estate and Chungtong Tea Estate, jurisdiction list Nos. 19, 16, 9, 5 and 2, thanas Darjeeling and Pulbazar, pargana Darjeeling Hills, district Darjeeling, it is hereby notified that for the above purpose a piece of land measuring, more or less, 20,000 square feet or half acre, is likely to be required within the aforesaid village and tea estates of Darjeeling.

This notification is made, under the provisions of section 4 of Act I of 1894, to all whom it may concern.

A plan of the land showing the position of each plot required to be acquired may be inspected in the office of the Deputy Commissioner, Darjeeling.

In exercise of the powers conferred by the aforesaid section, the Governor in Council is pleased to authorise the officers for the time being engaged in the undertaking, with their servants and workmen, to enter upon and survey the land and do all other acts required or permitted by that section.

Any person interested in the above land, who has any objection to the acquisition thereof, may, within thirty days after the date on which public notice of the substance of this notification is given in the locality, file an objection in writing before the Deputy Commissioner of Darjeeling.

Pabna.—No. 11605L.A. — 11th August 1936.—Mr. H. S. M. Ishaque, I.C.S., Subdivisional Officer of Serajganj, in the district of Pabna, is vested with the powers of a Collector, under the Land Acquisition Act, 1 of 1894, in that subdivision.

Birbhum.—No. 11636L.A.—13th August 1936.—Whereas it appears to the Governor in Council that land is likely to be required to be taken by Government at the public expense for a public purpose, viz., for the extension of distributary No. 5 of the Bakreswar canal, in the villages of Bodhpur, Babupur and Sehana, jurisdiction list Nos. 154, 155 and 156, thana Suri, parganas Alinagar and Jainujial, district Birbhum, it is hereby notified that for the above purpose a piece of land comprising portions of cadastral plots Nos. 59, 61, 62, 65 and 70 to 74 of village Bodhpur, portions of cadastral plots Nos. 344 to 347, 350 to 353, 356 and 357 of village Babupur and portions of cadastral plots Nos. 221, 222, 267 to 269, 271 to 274, 278 to 283 and 302 of village Sehana and measuring, more or less, 1·99 acres, is likely to be required within the aforesaid villages of Bodhpur, Babupur and Sehana.

This notification is made, under the provisions of section 4 of Act I of 1894, to all whom it may concern.

A plan of the land may be inspected in the office of the Collector of Birbhum.

In exercise of the powers conferred by the aforesaid section, the Governor in Council is pleased to authorise the officers for the time being engaged in the undertaking, with their servants and workmen, to enter upon and survey the land and do all other acts required or permitted by that section.

Any person interested in the above land, who has any objection to the acquisition thereof, may, within thirty days after the date on which public notice of the substance of this notification is given in the locality, file an objection in writing before the Collector of Birbhum.

Bankura.—No. 11669L.A. — 14th August 1936.—Whereas it appears to the Governor in Council that land is likely to be required to be taken by Government at the public expense for a public purpose, viz., for the Salbundh Irrigation Scheme in the villages of Chuamasina, Radhanagar, Kanklia, Tentulia, Rautara and Dapanjuri, jurisdiction list Nos. 67, 97, 90, 104, 105 and 102, respectively, thana Bishnupur, pargana Bishnupur, district Bankura, it is hereby notified that for the above purpose a piece of land comprising portions of cadastral survey plot Nos. 2489, 2503, 2506, 2507, 2508 and 5112 of the village Chuamasina, jurisdiction list No. 67, cadastral survey plot Nos. 19, 25, 456, 460, 590, 631, 927, 937, 1357, 1376, 1411, 1435, 2806, 2808, 2893, 3713, 3777, 3818, 3863, 3895, 3913, 4661, 4705, 4789, 4807, 4843, 5228, 5553 and portions of cadastral survey plot Nos. 2, 5, 22, 459, 593, 628, 3500, 3896, 4231, 4233, 4271, 4699, 4700, 4702, 4703, 4704, 4957, 4975, 4976 and 5591 of village Radhanagar, jurisdiction list No. 97, cadastral survey plot No. 438 and portion of cadastral survey plot No. 301 of village Kanklia, jurisdiction list No. 90, cadastral survey plot Nos. 84, 346, 569, 574 and portions of cadastral survey plot Nos. 1, 25, 27, 62, 63, 67, 68, 69 and 70 of village Tentulia, jurisdiction list No. 104, cadastral survey plot Nos. 501, 528, 549, 2398 and portions of cadastral survey plot Nos. 1, 3, 10, 13, 467, 473, 474, 479, 492, 495, 496, 499 and 2414 of village Rautara, jurisdiction list No. 105, cadastral survey plot No. 888 and portions of cadastral survey plot Nos. 649, 651, 694, 695, 696, 701, 702, 703, 704, 705, 712, 715, 719, 721, 842, 843, 844, 845, 848, 849 and 854 of village Dapanjuri, jurisdiction list No. 102, and measuring, more or less, 11·44 acres, is likely to be required within the aforesaid villages of Chuamasina, Radhanagar, Kanklia, Tentulia, Rautara and Dapanjuri.

This notification is made, under the provisions of section 4 of Act I of 1894, to all whom it may concern.

A plan of the land may be inspected in the office of the Subdivisional Officer, Bishnupur.

In exercise of the powers conferred by the aforesaid section, the Governor in Council is pleased to authorise the officers for the time being engaged in the undertaking, with their servants and workmen, to enter upon and survey the land and do all other acts required or permitted by that section.

Any person interested in the above land, who has any objection to the acquisition thereof, may, within thirty days after the date on which public notice of the substance of this notification is given in the locality, file an objection in writing before the Subdivisional Officer of Bishnupur.

24-Parganas.—No. 11671L.A.—14th August 1936.—Whereas it appears to the Governor in Council that additional land is likely to be required to be taken by Government at the expense of district board, 24-Parganas, for a public purpose, viz., for the extension of Gangajora Road, from Sonarpore Railway Station to Kheyadah Bazar in the village of Gorkhara, jurisdiction list No. 22, thana Sonarpur, pargana Khaspur, district 24-Parganas, it is hereby notified that for the above purpose a piece of land comprising portions of cadastral plot Nos. 527, 526, 525, 524, 523, 1056, 517, 519 and 512, and measuring, more or less, 0·3843 of an acre, is likely to be required within the aforesaid village of Gorkhara.

This notification is made, under the provisions of section 4 of Act I of 1894, to all whom it may concern.

A plan of the land may be inspected in the office of the Chairman, district board, 24-Parganas.

In exercise of the powers conferred by the aforesaid section, the Governor in Council is pleased to authorise the officers for the time being engaged in the undertaking, with their servants and workmen, to enter upon and survey the land and do all other acts required or permitted by that section.

Any person interested in the above land, who has any objection to the acquisition thereof, may, within thirty days after the date on which public notice of the substance of this notification is given in the locality, file an objection in writing before the Collector of 24-Parganas.

Chittagong.—No. 11674L.A.—14th August 1936.—In exercise of the powers conferred by section 48(*1*) of the Land Acquisition Act, I of 1894, the Governor in Council is pleased to withdraw from the acquisition of 0·75 of an acre of land declared under notification No. 1437L.A., dated the 29th January 1930, published at page 143, Part I of the *Calcutta Gazette* of the 6th February 1930, for the Darbeshkata Forest Beat Office in the village of Bara Bheola, thana Chakaria, zilla Chittagong.

Noakhali.—No. 11712L.A.—17th August 1936.—Whereas it appears to the Governor in Council that land is likely to be required to be taken by Government at the expense of the district board of Noakhali for a public purpose, viz., for the construction of a feeder road from Maijdi new town to Harinarayanpur railway station, in the villages of North Rajarampur and Harinarayanpur, jurisdiction list Nos. 108 and 113, respectively, thana Sudharam, zilla Noakhali, it is hereby notified that for the above purpose a piece of land measuring, more or less, 1·89 acres comprising parts of cadastral survey plot Nos. 45 and 65 of mauza North Rajarampur and parts of cadastral survey plot Nos. 234, 235, 236, 237, 248, 249, 250, 258 and 259 of mauza Harinarayanpur, is likely to be required within the aforesaid villages of North Rajarampur and Harinarayanpur.

This notification is made, under the provisions of section 4 of Act I of 1894, to all whom it may concern.

A plan of the land may be inspected in the office of the Collector of Noakhali.

In exercise of the powers conferred by the aforesaid section, the Governor in Council is pleased to authorise the officers for the time being engaged in the undertaking, with their servants and workmen, to enter upon and survey the land and do all other acts required or permitted by that section.

Any person interested in the above land, who has any objection to the acquisition thereof, may, within thirty days after the date on which public notice of the substance of this notification is given in the locality, file an objection in writing before the Collector of Noakhali.

Pabna.—No. 11715L.A.—17th August 1936.—Whereas it appears to the Governor in Council that land is likely to be required to be taken by Government at the expense of the district board of Pabna for a public purpose, viz., for the Shahazadpur inspection bungalow in the village of Dwariapur, jurisdiction list No. 53, thana Shahazadpur, pargana Esupshahi, district Pabna, it is hereby notified that for the above purpose, a piece of land comprising cadastral plot Nos. 8286, 8295, and part of plot No. 8479/8603, and measuring, more or less, 0·67 of an acre, is likely to be required within the aforesaid village of Dwariapur.

This notification is made, under the provisions of section 4 of Act I of 1894, to all whom it may concern.

A plan of the land may be inspected in the office of the Subdivisional Officer of Serajgunje.

In exercise of the powers conferred by the aforesaid section, the Governor in Council is pleased to authorise the officers for the time being engaged in the undertaking, with their servants and workmen, to enter upon and survey the land and do all other acts required or permitted by that section.

Any person interested in the above land, who has any objection to the acquisition thereof, may, within thirty days after the date on which public notice of the substance of this notification is given in the locality, file an objection in writing before the Collector of Pabna.

24-Parganas.—No. 11722L.A.—17th August 1936.—In exercise of the powers conferred by section 48 (*1*) of the Land Acquisition Act, I of 1894, the Governor in Council is pleased to withdraw from the acquisition of 0·0226 of an acre of land comprising cadastral plot No. 658 and a portion of cadastral plot No. 167 which was included in the declaration No. 1424L.A., dated the 6th February 1934, under section 6 of the Land Acquisition Act, I of 1894, published at pages 244-45, Part I of the *Calcutta Gazette* of the 15th idem, in respect of the proposed acquisition of 0·38 acre of land required for a cart dumping depot in connection with the Bhatpara sewerage project in the village of Atpur, jurisdiction list No. 16, thana Jagatdal, pargana Saidpur, district 24-Parganas.

Nadia.—No. 11725L.A.—17th August 1936.—Whereas it appears to the Governor in Council that land is likely to be required to be taken by Government at the expense of the Nadia district board for a public purpose, viz., for construction of a village road near the railway gate under Maminpur union board, in the village of Sirajkandi, jurisdiction list No. 45, thana Chuadanga, district Nadia, it is hereby notified that for the above purpose a piece of land comprising portions of cadastral plot Nos. 983 and 985, and measuring, more or less, 0·13 of an acre, is likely to be required within the aforesaid village of Sirajkandi.

This notification is made, under the provisions of section 4 of Act I of 1894, to all whom it may concern.

A plan of the land may be inspected in the office of the Subdivisional Officer of Chuadanga.

In exercise of the powers conferred by the aforesaid section, the Governor in Council is pleased to authorise the officers for the time being engaged in the undertaking, with their servants and workmen, to enter upon and survey the land and do all other acts required or permitted by that section.

Any person interested in the above land, who has any objection to the acquisition thereof, may, within thirty days after the date on which public notice of the substance of this notification is given in the locality, file an objection in writing before the Collector of Nadia.

Faridpur.—No. 11728L.A.—17th August 1936.—Whereas it appears to the Governor in Council that land is likely to be required to be taken by Government at the public expense for a public purpose, viz., for New Goalundo Ghat at Biswanathpur in the villages of Daulatdia, jurisdiction list No. 240, Ichhail-Sibrampur, jurisdiction list No. 239, South-Dhobagati, jurisdiction list No. 217 and North-Dhobagati, jurisdiction list No. 216, thana Goalundo, parganas Mamudpur, Baikunthapur, Kasemnagar, and Sahajadpur, district Faridpur, it is hereby notified that for the above purpose pieces of land measuring, more or less, 36·268 acres, commencing at chainage 2,500 from the 0 chainage which is at the mile 154 from Calcutta and proceeding generally towards the north-west through villages Daulatdia, Ichhail-Sibrampur, South-Dhobagati and North-Dhobagati and terminating at chainage 3,470 in mile 157, village North-Dhobagati, varying in width from 80 feet to 240 feet and being 11,530 feet in length, within the mile 155 to 157 (both inclusive) of the alignment, is likely to be required within the aforesaid villages of Daulatdia, Ichhail-Sibrampur, South-Dhobagati and North-Dhobagati.

This notification is made, under the provisions of section 4 of Act I of 1894, to all whom it may concern.

A plan of the land may be inspected in the office of the Subdivisional Officer of Goalundo.

In exercise of the powers conferred by the aforesaid section, the Governor in Council is pleased to authorise the officers for the time being engaged in the undertaking, with their servants and workmen, to enter upon and survey the land and do all other acts required or permitted by that section.

Any person interested in the above land, who has any objection to the acquisition thereof, may, within thirty days after the date on which public notice of the substance of this notification is given in the locality, file an objection in writing before the Collector of Faridpur.

J. B. KINDERSLEY,
Secy. to the Govt. of Bengal.

BENGAL LEGISLATIVE COUNCIL DEPARTMENT.

NOTIFICATION.

No. 2005L.C.—14th August, 1936.—It is hereby notified in pursuance of rule 14(*9*) of the Bengal Electoral Rules that Mr. R. M. Sassoon has been declared under rule 14(*2*) of the aforesaid rules to have been duly elected by the Presidency and Burdwan (European) Constituency to be a member of the Bengal Legislative Council.

K. ALI AFZAL, *Asstt. Secy.*,
for *Secy. to the Bengal Legis. Council*
(*on leave*).

BOARD OF REVENUE, BENGAL.

NOTIFICATION.

Bogra.—No. 11198C.P. — 10th August 1936.—In exercise of powers conferred by clause (*2*) of section 8 of the Bengal Land Revenue (Assistant Collectors) Regulation, 1821 (IV of 1821), the Board of Revenue authorises Babu Jajneswar Majumdar, Settlement Kanungo, who has been placed on duty in connection with the maintenance, for the purposes of section 158A of the Bengal Tenancy Act, 1885, of the record-of-rights of the estate of Maharaja Shashi Kanta Acharjya Choudhuri in the district of Bogra, to exercise and perform within the local limits of the said estate any of the powers and duties vested in the Collectors of Land Revenue under any enactment in force therein for the purpose of the said work of maintenance of the record-of-rights.

S. BANERJEE,
Secy. to the Board of Revenue, Bengal.

TREASURY NOTICE.

Orders by the Deputy Accountant-General, Bengal.

The Treasury Buildings, the 12th August 1936.

It is notified that the refund order book No. 6404 containing 50 orders is in use by the Income-Tax Office, Central Salaries Circle, Calcutta, with effect from the 4th August 1936.

C. BHASKARAIYA,

Dy. Accountant-General, Bengal.

HIGH COURT NOTICE.

Original Side.

Calcutta, the 12th August 1936.

In modification of the notification, dated the 16th July 1936, published in the *Calcutta Gazette*, dated 23rd July 1936, Part I, page 1778, the Hon'ble the Chief Justice of Bengal has been pleased to grant Babu Subodh Chandra Sen Gupta, Assistant Registrar, High Court, Original Side, in the grade of 200—300, leave for six months preparatory to retirement from 6th July 1936, viz., leave on average pay for four months, under Fundamental Rule 81 (*b*) (*ii*), and on half average pay for two months, under Fundamental Rule 81 (*d*) read with Fundamental Rule 86.

By order,

A. L. COLLET, *Registrar.*

ORDERS BY COMMISSIONERS OF DIVISIONS.

Burdwan Division—Chinsura.

No. 2028L.S.-G.—8th August 1936.—It is hereby notified for general information that, under rule 20(*b*) read with rule 23 of the rules for the management of charitable hospitals and dispensaries in Bengal, Babu Profulla Kumar Chakravarty has been appointed to be a member of the committee for the management of the charitable dispensary at Geonkhali in the district of Midnapore, *vice* Babu Bibhuti Bhusan Chakravarty, transferred.

No. 2031L.S.-G.—8th August 1936.—It is hereby notified for general information that, under rule 20(*b*) read with rule 23 of the rules for the management of charitable hospitals and dispensaries in Bengal, Babu Kripanath Ghosh has been appointed to be a member of the committee for the management of the charitable dispensary at Kelomal in the district of Midnapore, *vice* Babu Khitinath Bose, deceased.

No. 2038L.S.-G.—8th August 1936.—It is hereby notified for general information that, under section 19(*1*) of the Bengal Local Self-Government Act (Bengal Act III of 1885), Babu Paresh Nath Maity has been duly elected to be a member of the Midnapore district board by the Tamluk local board in the district of Midnapore, *vice* Rai Saheb Phanindra Bhusan Mitra, resigned.

No. 1347M. — 11th August 1936. — It is hereby notified for general information under section 50 of the Bengal Municipal Act, 1932 (XV of 1932), that the Commissioners of the Kotrung Municipality in the district of Hooghly, by a resolution passed at a special meeting held on the 22nd July 1936, duly elected Babu Balai Lal Konar to be their Chairman, *vice* Babu Anil Kumar Dutta, resigned.

No. 2051 L.S.-G.—13th August 1936.—In exercise of the powers conferred on me by section 19(*2*) of the Bengal Local Self-Government Act (Act III B. C. of 1885) and acting under the orders of the local Government given in the exercise of the administrative control vested in them by section 29B of the Act, I hereby appoint Babu Bipin Chandra Ghosh to be a member of the Uluberia local board in the district of Howrah, *vice* Babu Durga Das Ash, deceased.

No. 4849J.G.—15th August 1936.—In accordance with the provisions of rule 63(*2*) of Chapter IV of the Bengal Jail Code, Volume I, I hereby appoint Mr. P. S. Keelan, C.I.E., to be a non-official visitor of the Asansol Sub-Jail in the district of Burdwan for a period of two years, with effect from the 27th August 1936.

No. 4853J.G.—15th August 1936.—In accordance with the provisions of rule 63(*2*) of Chapter IV of the Bengal Jail Code, Volume I, I hereby appoint Babu Durgapada Mukherji and Babu Tarapada Chowdhury, M.A., B.L., to be non-official visitors of the Katwa Sub-Jail in the district of Burdwan for a period of two years with effect from the 20th September 1936.

No. 2069L.S.-G.—15th August 1936.—It is hereby notified for general information that, under rule 20(*b*) read with rule 23 of the rules for the management of charitable hospitals and dispensaries in Bengal, Babu Jogueswar Mahanti has been appointed to be a member of the committee for the management of the charitable dispensary at Protapdighi in the district of Midnapore, *vice* Choudhuri Jogendra Nandan Das Mahapatra, deceased.

L. B. BURROWS, *Commissioner.*

Birbhum, the 13th August 1936.

No. 50L.S.-G. — It is hereby notified for general information that, under section 13 of the Bengal Village Self-Government Act, 1919 (Bengal Act V of 1919), read with rule 35 of the rules for the election and appointment of members of union boards, etc., Munshi Jillar Rahaman has been duly elected to be a member for Ward No III of the Nowanagar union board in Nauur police-station in the Sadar subdivision of the district of Birbhum, *vice* Maulvi Abdus Sukur, removed.

K. B. MALLIK, for *District Magistrate.*

Chittagong Division—Chittagong.

No. 3988G.—11th August 1936.—The following draft by-laws framed by the district board of Tippera under section 139 of the Bengal Local Self-Government Act, 1885 (Bengal Act III of 1885), which the undersigned proposes to confirm under rule 5(*l*) of the rules made by Government under clause (*t*) of section 138 of the Act and issued with their notification No. 1468L.S.-G., dated the 22nd May 1914, are published for the information of persons likely to be affected thereby.

2. The draft will be taken into consideration on the 21st September 1936, and any objection or suggestion received from any person before that date will be duly considered:—

Draft by-laws.

By-laws regarding public health and sanitation in the district of Tippera.

Any person exposing for sale in a hat or a market any article of food, such as milk or milk products, edible oil, butter, ghee, molasses, sugar, sweetmeats and the like except in covered receptacles and free from contamination by dust, flies, etc., shall be liable to a fine which may extend to rupees ten only and for a subsequent offence the fine may extend to rupees fifty.

2. Any person, who, suffering from leprosy or any loathsome or contagious diseases, exposes any article of food for sale in a hat or market, shall be liable to a fine which may extend to rupees ten and for a subsequent offence the fine may extend to rupees fifty.

3. Any person who constructs or allows to stand a privy or a urinal within a radius of fifty feet from any place in a hat or market where articles of food are exposed for sale or from any source of water-supply, shall be liable to a fine which may extend to rupees twenty-five and for continuing the offence to a daily fine of rupees two only.

4. Any person selling or exposing for sale in a hat or market any meat, fish, vegetable, fruits or other articles of food or drink, which is in a state of decomposition and injurious to human health, shall be liable to a fine which may extend to rupees twenty and for a subsequent offence the fine may extend to rupees fifty. And such unwholesome articles are liable to destruction then and there by any officer of the district board, authorisd on this behalf by the district board.

5. Any person taking water, for the purpose of drinking, from any well, tank or other place which has been prohibited by a public notice by the district board or by any person authorised on this behalf by the district board under section 90A of the Local Self-Government Act, shall be liable to a fine which may extend to rupees fifty.

6. Any person or persons polluting the water of any stream, river or watercourse within this district, by throwing corpses or carcasses into any of them, shall be liable to a fine which may extend to rupees fifty.

J. D. V. HODGE, *Commissioner (offg.).*

Comilla, the 13th August 1936.

No. 7685M.—It is hereby notified for general information that, under section 13 of the Bengal Village Self-Government Act, 1919, read with section 6(2) and rule 35 of the rules for the election and appointment of members of union boards, Maulvi Abdul Hafiz Bhuiya has been duly elected as a member of the Ichhapura union board No. X, ward No. 8, of the Brahmanbaria police-station in the Brahmanbaria subdivision of the district of Tippera, *vice* Babu Upendra Nath Kapali, deceased.

J. P. RAY, *Addl. District Magistrate.*

Chittagong, the 10th August 1936.

Under rule 32A of the election rules framed under the Bengal Local Self-Government Act, III (B.C.) of 1885, it is hereby notified that the 6th November 1936 has been fixed as the date for the by-election of the Cox's Bazar local board for the Cox's Bazar thana to fill up the vacancy in the ordinary seat caused by the death of Khan Sahib Muzaffar Ahamed Chowdhury.

H. BANERJEE, *Addl. District Magistrate.*

Orders by the Deputy Inspector-General of Police, Bakarganj Range.

Barisal.—No. 3988.—13th August 1936.—Maulvi Abdur Rashid, Inspector, Tippera, is granted 4 months' leave on average pay, under rule 81 (*b*) (*ii*) of the Fundamental Rules, with effect from 24th August 1936.

Sub-Inspector Manmatha Nath Mitra of Tippera (at present employed as Railway Intelligence Officer) is appointed to act as Inspector in the vacancy.

G. H. MANNOOCH,

Deputy Inspector-General of Police (offg.).

Dacca Division—Dacca.

Corrigendum. — No. 4142J.—11th August 1936.—In this office notification No. 3340J., dated the 30th June 1936, publishing the names of the elected members of the local boards in the district of Mymensingh, published at pages 1706-1708, Part I of the *Calcutta Gazette*, dated 9th July 1936, *read* "2nd July 1936" *for* "30th June 1936" in the first line after "No. 3340J." and also *read* "Maulvi *Safaruddin* Ahmed Mazumdar" *for* "Maulvi *Sarafuddin* Ahmed Mazumdar" at page 1707 under Netrokona local board.

W. H. NELSON, *Commissioner.*

Faridpur, the 11th August 1936.

Corrigendum.—For the name of Babu Jitendra Nath Das as published at page 1745, Part I of the *Calcutta Gazette*, dated the 16th July 1936, under notification No. 5571J., dated the 6th July 1936, *read* Babu Jatindra Nath Das.

K. A. L. HILL, *District Magistrate.*

Orders by the Deputy Inspector-General of Police, Dacca Range.

Dacca.—No. 3295.—14th August 1936.—Babu Suresh Chandra Mazumdar, Court Inspector, Faridpur, is granted 1 day's leave on half average pay in extension of the leave already granted to him.

Sub-Inspector Ananta Kumar Das Gupta of Dacca will continue to act as Court Inspector, Faridpur, in the vacancy.

A. D. GORDON,
Deputy-Inspector-General of Police.

Presidency Division—Calcutta.

No. 1848R.G.—10th August 1936.—Babu Sachindra Nath Mitra, Sub-Deputy Collector and Circle Officer, Magura, Jessore, is allowed leave on average pay for fifteen days, under rule 81(*b*)(*ii*) of the Fundamental Rules, with effect from the 26th July 1936 or any subsequent date.

No. 1854R.G.—10th August 1936.- Babu Asit Kumar Biswas, Sub-Deputy Collector, posted to this division, is posted to Sadar, Murshidabad, as Circle Officer.

No. 1984L.S.-G.—7th August 1936.—In exercise of the powers conferred upon me by section 25 of the Bengal Local Self-Government Act III (B.C.) of 1885, as amended, I approve the election of the following gentlemen as Chairmen of the local boards named below in the district of Khulna:—

Babu Rajendra Nath Sarkar—Khulna Sadar local board.

Babu Suk Lal Nag—Bagerhat local board.

Maulvi Abdur Rauf Khan Chaudhuri—Satkhira local board.

No. 1863R.G.—10th August 1936. — Babu Srish Chandra Mukharji, Sub-Deputy Collector, Bagerhat, Khulna, is transferred to the headquarters station of that district as Circle Officer.

No. 1868R.G.—10th August 1936.—Maulvi Muhammad Shamsul Huda, Sub-Deputy Collector and Circle Officer, Sadar, Khulna, is transferred to the Bagerhat subdivision of that district.

No. 2076L.S.-G.—15th August 1936.—Whereas by notification No. 2646L.S.-G., dated the 25th April 1921, the number of members of the local boards of the district of the 24-Parganas has been fixed and by notification No. 1744L.S.-G. of 1st March 1935, as modified by notification No. 2447L.S.-G., dated the 15th April 1936, the Local Government have declared in such areas minority communities as follows:—

	No. of members.	Minority community.
Sadar local board ..	20 ..	Muhammadan
Barrackpore local board ..	10 ..	Muhammadan.
Baraset local board ..	10 ..	Hindu.
Diamond Harbour local board ..	16 ..	Muhammadan.
Basirhat local board ..	12 ..	Nil.

It is hereby notified that in the exercise of the powers under rule 19 of the rules made under section 138(*a*) of the Bengal Local Self-Government Act, III(B.C.) of 1885, as amended, the Commissioner, after consultation with the District Magistrate, has decided that the following shall be the thanas, the number of special seats to be reserved, the allocation of such special seats and the number of other members to be elected for each thana of the above local boards:—

Sadar local board.

(1) Thana No. 1—Police-stations Behala, Metiabruz and Moheshtola.

Thana No. 2—Police-stations Tollygunge and Sonarpur.

Thana No. 3—Police-station Baruipore.
Thana No. 4—Police-station Joynagore.
Thana No. 5—Police-station Canning.
Thana No. 6—Police-station Bhangar.
Thana No. 7—Police-station Bishnupur.
Thana No. 8—Police-station Budge Budge.

(2) Number of special seats—Five.

(3) Allocation of special seats:—

One for thanas Nos. 1 and 2 together.
One for thanas Nos. 3 and 4 together.
One for thana No. 5.
One for thana No. 6.
One for thanas Nos. 7 and 8 together.

(4) Number of other members to be elected for each thana:—

Thana No. 1—One.
Thana No. 2—Two.
Thana No. 3—One.
Thana No. 4—One.
Thana No. 5—One.
Thana No. 6—One.
Thana No. 7—One.
Thana No. 8—One.

Barrackpore local board.

(1) Thana No. 1—Police-stations Khardah and Dum-Dum.

Thana No. 2—Police-station Bijpur
Thana No. 3—Police-station Naihati.
Thana No. 4—Police-station Jagaddal.
Thana No. 5—Police-station Titagarh.

(2) Number of special seats—Two.

(3) Allocation of special seats:—

One for thanas Nos. 1 and 5 together.
One for thanas Nos. 2, 3 and 4 together.

(4) Number of other members to be elected for each thana:—

Thana No. 1—One.
Thana No. 2—One.
Thana No. 3—One.
Thana No. 4—One.
Thana No. 5—One.

Baraset local board.

(1) Thana No. 1—Police-station Baraset.

Thana No 2—Police-stations Rajarhat and Deganga.
Thana No. 3—Police-stations Amdanga and Habra

(2) Number of special seats—Three.

(3) Allocation of special seats:—

One for thana No. 1.
One for thana No. 2.
One for thana No. 3.

(4) Number of other members to be elected for each thana:—

Thana No. 1—One.
Thana No. 2—One.
Thana No. 3—Two.

Diamond Harbour local board.

(1) Thana No. 1—Police-station Magrahat.

Thana No. 2—Police-station Falta.
Thana No. 3—Police-station Diamond Harbour.
Thana No. 4—Police-station Kulpi.
Thana No. 5—Police-station Kakdwip.
Thana No 6—Police-station Sagar.
Thana No. 7—Police-station Mathurapur.

(2) Number of special seats—Three.

(3) Allocation of special seats:—

One for thana No. 1.
One for thanas Nos. 2 and 3 together.
One for thanas Nos. 4, 5, 6 and 7 together.

(4) Number of other members to be elected for each thana:—

Thana No. 1—Two.
Thana No. 2—One.
Thana No. 3—One.
Thana No. 4—One.
Thana No. 5—One.
Thana No. 6—One.
Thana No 7—One.

Basirhat local board.

(1) Thana No. 1—Police-station Sarupnagar.

Thana No. 2—Police-station Baduria.
Thana No. 3—Police-station Basirhat.
Thana No. 4—Police-station Haroa.
Thana No. 5—Police-station Hasnabad.
Thana No. 6—Police-station Sandeshkhali.

(2) Number of members to be elected for each thana:—

Thana No. 1—One.
Thana No. 2—One.
Thana No. 3—Two.
Thana No 4—One.
Thana No. 5—One.
Thana No. 6—Two.

The above notification supersedes notification No. 2572L.S.-G., dated the 2nd December 1935, published at page 2526, Part I of the *Calcutta Gazette* of 12th December 1935.

No. 2080L.S.-G.—15th August 1936.—Whereas by notification No. 1744L.S.-G., dated the 1st March 1935, the Muhammadan community has been declared a minority community in the area under the authority of the district board of the 24-Parganas, it is hereby notified that in the exercise of the powers under rule 53A of the rules made under section 138(*a*) of the Bengal Local Self-Government Act, III (B.C.) of 1885, the Commissioner has determined—

(1) that seven seats shall be reserved on the district board for the Muhammadan community, and

(2) that members shall be elected to the above seats as follows:—

By the Sadar local board—Two.
By the Barrackpore local board—One.
By the Diamond Harbour local board—One.
By the Baraset local board—Two.
By the Basirhat local board—One.

The above notification supersedes notification No. 2576L.S.-G., dated the 2nd December 1935, published at page 2527, Part I of the *Calcutta Gazette* of 12th December 1935.

A. J. DASH, *Commissioner.*

Alipore, the 13th August 1936.

No. 24/36-9-V. S.-G.—It is hereby notified for general information that, under sub-section (2) of section 6 of the Bengal Village Self-Government Act, 1919 (Bengal Act V of 1919), the following gentlemen have been duly elected to be members of the undermentioned union boards in police-station Magrahat in the Diamond Harbour subdivision of the district of 24-Parganas:—

Sherpur union board No. I.

Maulvi Jasimuddin Ahmed.
Maulvi Abdul Samad Mondal.
Munshi Sobhan Baksh Mondal.
Munshi Tomizuddin Mondal.
Munshi Kayem Ali Sarder.
Babu Haripodo Mondal.

Yearpur union board No. II.

Babu Jnanendra Nath Upadhaya.
Babu Mahendra Nath Biswas.
Babu Ramballav Sarder.
Babu Kalipada Mondal.
Babu Upendra Nath Ghosh.
Munshi Hazrat Ali Mondal.

Nainan union board No. VII.

Munshi Mohammad Ali Molla.
Munshi Mansur Ali Molla.
Munshi Quasem Ali Baddi.
Munshi Farhad Hussain Shaikh.
Babu Rash Bihari Bose.
Babu Joggeswar Shaut.

Gokarni union board No. VI.

Babu Sourindra Nath Bose.
Babu Tarak Nath Dutta.
Munshi Entaz Ali Molla.
Babu Doyal Chandra Mondal.
Babu Atul Krishna Das.
Babu Bijoy Krishna Paramanik.

Mohanpur union board No. III.

Munshi Abu Bakar Sirdar.
Babu Satish Chandra Bhuina.
Babu Gopal Ghosh.
Munshi Abu Hussain Zamadar.
Babu Rai Charan Ghosh.
Babu Mahim Chandra Mondal.

Sangrampur union board No. XII.

Munshi Moksudar Rahman Molla.
Munshi Mir Ali Baddi.
Munshi Bhului Molla.
Munshi Kherajuddin Molla.
Munshi Abdul Hamid Molla.
Munshi Abdul Aziz Shaikh.

Tekpanja union board No. XI.

Munshi Baharuddin Sanpui.
Munshi Akkas Ali Mistri.
Babu Gopal Chandra Sarder.
Munshi Neser Ali Pailan.
Munshi Nazir Zamadar.
Babu Abinash Chandra Bondopadhaya.

Deula union board No. X.

Babu Upendra Nath Biswas.
Babu Ashutosh Chakravarty.
Babu Ramananda Chakravarty.
Babu Birendra Nath Mukhopadhaya.
Babu Amrita Lal Jana.
Babu Radha Krishna Das.

Usthi union board No. IX.

Munshi Zellan Rahman Khan.
Nabdul Molla.
Daraf Gazi.
Sadeque Halder.
Golam Robbani Naskar.

Dhonpota union board No. XIV.

Babu Satish Chandra Halder.
Babu Rakhal Chandra Koyal.
Babu Hara Lal Mondal.
Babu Sankar Chandra Bar.
Timir Kanto Naskar.
Babu Khagendra Nath Halder.

Bishnupur union board No. XV.

Bhupendra Nath Naskar.
Atul Chandra Naskar.
Upendra Nath Sardar.
Shamsuddin Sheik.
Moniruddin Ahmed.
Abinash Chandra Bhattacharjee.

No. 24/36-10-V. S.-G.—It is hereby notified for general information that, under sub-section (3) of section 6 of the Bengal Village Self-Government Act, 1919 (Bengal Act V of 1919), the following gentlemen have been duly appointed to be members of the undermentioned union boards in police-station Magrahat in the Diamond Harbour subdivision of the district of 24-Parganas:—

Sherpur union board No. I.

Babu Rajendra Nath Halder.
Dr. Susil Kumar Mondal.
Babu Abinash Chandra Samanta.

Yearpur union board No. II.

Munshi Kalimuddin Ahmed.
Munshi Md. Bazlur Rahman, B.A.
Babu Nagendra Nath Sadhu Khan.

Nainan union board No. VII.

Babu Shyama Charan Chakravarty.
Babu Hem Chandra Mondal.
Munshi Fakir Mohammad Molla.

Gokarni union board No. VI.

Munshi Karim Buksh Molla.
Munshi Quasem Ali.
Munshi Maniruddin Ahmed.

Mohanpur union board No. III.

Md. Sharif Munshi.
M. Siam Ali Molla.
Babu Shashi Bhusan Mondal.

Sangrampur union board No. XII.

Babu Purnendu Kumar Mondal.
Babu Bihari Lal Baidya.
Munshi Reazuddin Nasker.

Tekpanja union board No. XI.

Munshi Fakir Mohammad Naskar.
Haji Kasimuddin Molla.
Babu Priya Nath Mondal.

Deula union board No. X.

Munshi Kayem Sarder.
Munshi Taleb Ali Molla.
Munshi Harmat Khan.

Usthi union board No. IX.

Babu Dhirendra Nath Sarkar.
Babu Satish Chandra Dutta.
Shah Zamal Munshi.

Dhonpota union board No. XIV.

Ala Bux Nasker.
Ismail Mallick.
Kartick Chandra Sardar.

Bishnupur union board No. XV.

Md. Akkas Ali Zamadar.
Gazi Golam Hossain.
Girish Chandra Sarkar.

No. 4/36-11-V. S.-G.—It is hereby notified for general information that, under sub-section (4) of section 6 of the Bengal Village Self-Government Act, 1919 (Bengal Act V of 1919), Babu Shashi Bhusan Pal has been appointed to be a member of the Usthi union board in police-station Magrahat in the Diamond Harbour subdivision of the district of 24-Parganas.

R. GUPTA, *Addl. District Magistrate.*

Bengal Chamber of Commerce Constituency of the Council of State.

Calcutta, the 20th August 1936.

Notice is hereby given, under the provision of No. 19(5) of the Council of State Electoral Rules, that the return of election expenses and the declaration made in respect thereto, in regard to his candidature for election as the representative of the Bengal Chamber of Commerce Constituency of the Council of State, were duly lodged by the Hon'ble Mr. C. G. Arthur with me on the 12th August 1936. Such return and declaration may, on payment of a fee of one rupee, be inspected on application to me in my office between the hours of 11 a.m. and 4 p.m. for one week from this date.

A. C. DANIEL, *Returning Officer.*

Rajshahi Division—Jalpaiguri.

No. 3230J.—10th August 1936.—Under the provisions of rule 63(2) of Chapter IV of the Bengal Jail Code, I hereby appoint Miss Sneha Lata Roy, M.A., B.T., to be a non-official lady visitor of the Rajshahi Central Jail for a period of two years.

L. R. FAWCUS, *Commissioner (offg.).*

Rangpur, the 12th August 1936.

No. 5341J.—It is hereby notified for general information that, under section 13 of the Bengal Village Self-Government Act, 1919 (Bengal Act V of 1919), read with rule 36 of the rules for the appointment of members of union boards, etc., Munshi Shahar Uddin Tashildar of Sonakhuli, police-station Saidpur, has been appointed to be a member of the Bothlagari union board in the police-station Saidpur in the Nilphamari subdivision of the Rangpur district, *vice* Munshi Badil Mohammad, deceased.

S. K. GHOSH, *District Magistrate.*

Rajshahi, the 11th August 1936.

No. 6847J.—It is notified for general information that Molla Moslem Ali, an elected member to the Rajshahi South Muhammadan constituency of the Bengal Legislative Council lodged with me (Returning Officer) the return of election expenses and the declarations made in respect thereof, on the 4th August 1936. The returns and declarations are open to inspection at my office on payment of a fee of Re. 1 on week days from 11 a.m. to 5 p.m.

Rajshahi, the 13th August 1936.

No. 6911J.—It is hereby notified for general information that, under section 13 of the Bengal Village Self-Government Act, 1919 (Bengal Act V of 1919), read with rule 35 of the rules for the election and appointment of members of union boards, etc., Maulvi Md. Taripuddin Sarkar has been appointed a member of the Dharabarisha union board in Gurudaspur police-station in the Nator subdivision of the district of Rajshahi, *vice* Maulvi Meyajan Sarkar, resigned.

K. K. HAJARA, *District Magistrate.*

Bogra, the 13th August 1936.

No. 3831J.—It is hereby notified for general information that, under sub-section (2) of section 6 of the Bengal Village Self-Government Act, 1919 (Bengal Act V of 1919), the following gentlemen have been duly elected to be members of the undermentioned union boards in the district of Bogra:—

Bogra police-station.

Union No. XVII—Gohail.

Ward No. I.

Munshi Md. Safatulla Mondal.
Munshi Md. Kasimuddin Pramanik.

Ward No. II.

Munshi Md. Kabiruddin Pramanik.
Munshi Md. Fani Uddin Mondal.

Ward No. III.

Munshi Md. Syedulla Talukdar.
Munshi Md. Ayezuddin Talukdar.

Sherpur police-station.

Union No. VIII—Sughat.

Ward No. I.

Munshi Meseruddin Sarker.
Munshi Foyez Uddin Sheikh.

Ward No. II.

Munshi Azimuddin Akanda.
Munshi Keramat Ali Khandker.

Ward No. III.

Munshi Nurul Haq Bhuiya.
Munshi Ramjan Khan.

No. 3832J.—It is hereby notified for general information that, under sub-section (3) of section 6 of the Bengal Village Self-Government Act, 1919 (Bengal Act V of 1919), the following gentlemen have been duly appointed to be members of the undermentioned union boards in the district of Bogra:—

Bogra police-station.

Union No. XVII—Gohail.

Babu Dwaraka Mohan Nath.
Maulvi Mosharaf Ali Ahmed, B.L.
Maulvi Khoirat Ali Talukdar.

Sherpur police-station.

Union No. VIII—Sughat.

Munshi Mafiz Uddin Talukdar.
Dr. Abhoy Charan Pal.
Dr. Narendra Nath Roy.

T. I. M. NURANNABI CHAUDHURI,
District Magistrate.

Orders by the Deputy Inspector-General of Police, Rajshahi Range.

Jalpaiguri. No. 5930. 11th August 1936. The following transfers and promotion are ordered in the interests of public service:—

(*i*) Babu Ananta Prasad Das, Office Inspector, Bogra, is transferred to Rajshahi.

(*ii*) Babu Jitendra Nath Sen (II), Inspector, Dinajpur, is transferred to Bogra as Office Inspector, *vice* Babu Ananta Prasad Das, Office Inspector, transferred.

(*iii*) Sub-Inspector Haran Chandra Sen of Dinajpur (now attached to the D. I. B., Jalpaiguri) is appointed, with effect from the date of assuming charge, to act as Inspector, *vice* Maulvi Afazuddin Ahmad, Inspector, on leave

1. Maulvi Muhammad Mahiuddin officiating Inspector, Dinajpur, is granted 3 months' leave on average pay, on medical certificate, under rule 81 (*b*) (*ii*) of the Fundamental Rules, with effect from 7th August 1936, from which date he is reverted to his substantive rank of Sub-Inspector in the Rajshahi district.

2. Sub-Inspector Nasimuddin Ahmad of Pabna is temporarily transferred to Dinajpur and appointed, with effect from the date of assuming charge, to act as Inspector, *vice* Babu Shailesh Chandra Sinha, Inspector, now temporarily employed in the District Intelligence Branch, 24-Parganas.

The above transfers are made in the interests of public service.

E. B. JONES,
Deputy Inspector-General of Police.

Registered No. C207

The Calcutta Gazette

THURSDAY, AUGUST 20, 1936.

PART IA

Orders and Notifications by the Government of India republished for general information.

FOREIGN AND POLITICAL DEPARTMENT.

NOTIFICATION.

Simla, the 5th August 1936.

No. 464-E.—Mr. A C. Lothian, C.I.E., of the Political Department, is granted leave on average pay for 1 month and 12 days combined with leave on half average pay for 27 days, under the Fundamental Rules, with effect from the afternoon of the 3rd August 1936.

B. J GLANCY,
Political Secy. to the Govt. of India.

HOME DEPARTMENT.

NOTIFICATIONS.

ESTABLISHMENTS.

Simla, the 3rd August 1936.

No. F. 35/10/36.—It is hereby notified for general information that the Provisional Rules for competitive examinations for the Indian Civil Service to be held in India which were published with the Home Department notification No F 35/10/36-Ests., dated the 1st July 1936, will come into force on the 6th August 1936

POLICE.

The 1st August 1936.

No. F. 21/III/35.—In exercise of the powers conferred by section 17 of the Indian Arms Act, 1878 (XI of 1878), the Governor General in Council is pleased to direct that the following further amendments shall be made in the Indian Arms Rules, 1924, namely:—

I. In sub-rule (*1*) of rules 5 and 30 of the said Rules after clause (*d*) the following clause shall be inserted, namely:—

"(*e*) continuous fire firearms."

II. In Schedule I to the said Rules in the entries in the second column relating to items (1) to (6), after clause (*g*) the following clause shall be inserted, namely:—

"(*h*) continuous fire firearms."

The 3rd August 1936.

No. F. 25/8/36.—The following amendment to the Statutes establishing the "The King's Police Medal" is published for general information.

"The King's Police Medal."

The King has been pleased to issue a Warrant under His Majesty's Royal Sign Manual to the following effect:—

"Edward R I.

Edward The Eighth, by the Grace of God of Great Britain, Ireland and the British Dominions beyond the Seas KING, Defender of the Faith, Emperor of India, to all to whom these Presents shall come:

Greeting!

Whereas His late Majesty King Edward the Seventh did by Warrant under His Royal Sign Manual, bearing date the seventh day of July, one thousand nine hundred and nine, institute and create a new medal to be styled the King's Police Medal:

And whereas the said Royal Warrant was amended by Warrants under the Sign Manual of His late Majesty King George the Fifth bearing date respectively the third day of October, one thousand nine hundred and sixteen; the first day of October, one thousand nine hundred and thirty and the twelfth day of December, one thousand nine hundred and thirty-three:

And whereas We are desirous of further amending the third clause of the Royal Warrant of the seventh day of July, one thousand nine hundred and nine as altered by the Royal Warrant of the twelfth day of December, one thousand nine hundred and thirty-three:

Now know ye that We do by these Presents for Us, Our Heirs and Successors abrogate the third clause of the said Royal Warrant of the twelfth day of December, one thousand nine hundred and thirty-three, and in lieu thereof substitute the following:—

Thirdly—It is ordained that the Medal shall only be awarded to those of Our Faithful Subjects who have either performed acts of exceptional courage and skill or exhibited conspicuous devotion to duty as members of a recognised Police Force or of a properly organised Fire Brigade within Our United Kingdom of Great Britain and Northern Ireland Our Indian Empire or any of Our Colonies or any territory under Our protection or jurisdiction not being administered by Us in Our Government in any other part of Our Dominions; or within any other part of Our Dominions Our Government whereof has signified its desire that the Medal should be awarded under the provisions of this Our Warrant to members of any such Force or Brigade within such part, or within any territory under Our Protection or jurisdiction being administered by Us in such Government; and that such award shall be made only on a recommendation to Us by Our Principal Secretary of State for the Home Department.

Given at Our Court at St. James's the twenty-fifth day of May, 1936; in the First Year of Our Reign.

By His Majesty's Command,

JOHN SIMON.

No. F. 114/22/36.—His Excellency the Viceroy and Governor General of India has been pleased to confer the Indian Police Medal on the following officer:—

Bengal.

Muzaffar Hussain Khan, Assistant Sub-Inspector of Police.—This officer joined the police in 1911. He displayed conspicuous gallantry and devotion to duty on the 24th May 1936 on the occasion of an attempted dacoity when he attacked a gang of dacoits, and so disabled three of them that they were subsequently arrested.

N. B. —This award is made for gallantry under regulation (*d*) (*i*) of the regulations governing the grant of the Indian Police Medal and consequently carries with it the special allowance admissible to officers of and below the rank of Inspector of Police.

M. G. HALLETT,
Secy. to the Govt. of India.

JUDICIAL.

The 1st August 1936.

No. F. 25/10/36.—The Hon'ble Mr. Justice J. Lort-Williams, Kt., K.C., Barrister-at-Law, a Judge of the High Court of Judicature at Fort William in Bengal, is granted leave from the 10th August 1936, or the subsequent date on which he may avail himself of it, up to the 27th August 1936, namely, leave on full allowances for 15 days and leave on half allowances for the remaining period.

The 6th August 1936.

No. F. 25/1/36.—Mr. R. F. Lodge, I.C.S., took his seat as an Acting Judge of the High Court of Judicature at Fort William in Bengal on the forenoon of the 23rd July 1936.

J. A. THORNE,
Joint Secy. to the Govt. of India.

DEPARTMENT OF COMMERCE.

NOTIFICATIONS.

Simla, the 8th August 1936.

No. 1-M.-II-(10)/34.—Captain H. F. Darvell, Shipping Master, Calcutta, has been permitted to retire from Government service, with effect from the 8th April 1936.

With effect from the same date, Captain J. Forsyth, officiating Shipping Master, Calcutta, has been confirmed in that post, *vice* Captain Darvell.

Mr. A. M. Md. Fazl-ul-Karim, M.A., officiating Deputy Shipping Master, Calcutta, has been confirmed in that post with effect from the 8th April 1936, *vice* Captain Forsyth.

M. SLADE,
Joint Secy. to the Govt. of India (offg.).

REGISTRATION OF ACCOUNTANTS.

The 8th August 1936.

No. 1-A. (32)/35.—In exercise of the powers conferred by sub-section (2) of section 144 of the Indian Companies Act, 1913 (VII of 1913), the Governor-General in Council is pleased to direct that the following further amendments shall be made in the Auditor's Certificates Rules, 1932, the same having been previously published as required by the said sub-section, namely:—

1. In sub-rule (1) of rule 14 of the said Rules—

(*i*) Clauses (*a*), (*b*) and (*c*) shall be re-lettered as (*b*), (*c*) and (*d*), respectively;

(*ii*) before clause (*b*) as so re-lettered the following clause shall be inserted, namely:—

"(*a*) from whom a request has been received to that effect; or."

2. For rule 16 of the said Rules, the following rule shall be substituted, namely:—

"16. (1) The Governor-General in Council may at any time restore to the Register the name of a person removed temporarily therefrom under clause (*a*) or clause (*b*) of sub-rule (1) of rule 14, provided that—

(*a*) a person whose name was removed under clause (*a*) shall have paid before restoration the full amount of the annual fee for the year during which his name is restored; and

(*b*) a person whose name was removed under clause (*b*) shall have paid before restoration all arrears on account of the annual fee.

(2) The restoration of a name to the Register shall be notified in the Gazette of India and shall be communicated to the person concerned."

3. For clause (*a*) of rule 21 of the said Rules, the following clause shall be substituted, namely:—

"(*a*) has passed the Degree Examination of a University constituted by law in British India or of the University of Mysore or of the Osmania University or of a University constituted by law in Great Britain and Northern Ireland, with Accounting, Auditing and Mercantile or Commercial Law among other subjects for the degree course, or."

4. In rule 22 of the said Rules:—

(*i*) in clause (*b*) after the words "produces a certificate," the words and figure "in the form given in Appendix 4" shall be inserted.

(*ii*) in clause (*c*) after the words "audit clerk", the words "or partly as such clerk and partly as an articled clerk" shall be inserted.

5. After Appendix 3 to the said Rules, the following Appendix shall be inserted, namely:—

"APPENDIX 4.

Certificate to be signed by the head of an institution recognised under rule 22(*b*) of the Auditor's Certificates Rules, 1932.

(To be sent so as to reach the Secretary to the Government of India, Department of Commerce, New Delhi, at least three weeks before the commencement of the Examination.)

I certify that————————has attended ————out of————lectures and———— out of————lectures delivered for Group I and Group II, respectively, of the First Examination under the Auditor's Certificates Rules, 1932, during————————.

I further certify that to the best of my knowledge and belief, he bears a good moral character and that I consider him a fit person to appear at the said Examination.

(Signature)————————

(Designation)————————

Date————————.

Note.—Candidates are required to attend at least 75 per cent. of the number of lectures delivered for each Group."

No. 1-A. (40)/35.—The following draft of certain further amendments to the Auditor's Certificates Rules, 1932, which it is proposed to make in exercise of the powers conferred by sub-section (2) of section 144 of the Indian Companies Act, 1913 (VII of 1913), is published, as required by the said sub-section, for the information of all persons likely to be affected thereby, and notice is hereby given that the said draft will be taken into consideration on or after the 15th September 1936.

Any objection or suggestion which may be received from any person with respect to this draft before the aforesaid date will be considered by the Governor-General in Council:—

Draft Amendments.

1. For sub-rule (1) of rule 38 of the said Rules, the following sub-rule shall be substituted, namely:—

"(1) No person shall be eligible for inclusion in the list of Approved Accountants unless he—

(*i*) is in practice as a Registered Accountant in India; and

(*ii*) has been continuously for a period of not less than three years immediately before the date of his application either in practice as a Registered Accountant in India or employed as a paid assistant to a practising Registered Accountant in India or partly in such practice and partly so employed."

2. In sub-rule (3) of rule 38 of the said Rules, for the words "public accountant" the words "Registered Accountant in India" shall be substituted.

3. In rule 39 of the said Rules, for the words "who has ceased to practise as a public accountant" the words "whose name has been removed from the Register of Accountants, or who has ceased to practise as a Registered Accountant in India" shall be substituted.

4. In sub-rule (1) of rule 40 of the said Rules, for clauses (*c*), (*d*) and (*e*), the following clauses shall be substituted, namely:—

"(*c*) An Approved Accountant in practice without any partner may, in addition to the articled clerks and apprentices hereinbefore allowed to be employed, employ one articled clerk for every paid assistant in his service in India and enrolled on the Register.

(*d*) An Approved Accountant in practice with one or more partners who are Registered Accountants but who are not Approved Accountants, may, in addition to the articled clerks and apprentices hereinbefore allowed to be employed, employ one articled clerk for each of such partners in India and one articled clerk for each paid assistant in the service of the firm in India and enrolled on the Register.

(*e*) Where two or more Approved Accountants are in practice as partners with or without additional partners who are Registered Accountants but not Approved Accountants, one or other of the partners who are Approved Accountants, may, in addition to the articled clerks and apprentices hereinbefore allowed to be employed, employ one articled clerk only for each such additional partner in India and one for each paid assistant in the service of the firm in India and enrolled on the Register.".

5. For rule 47 of the said Rules, the following rule shall be substituted, namely:—

"47. Articles may by agreement between the articled clerk and his employer be assigned to another employer. Such an assignment shall be in Form G (Appendix 2) and shall be subject to the provisions of rule 42 regarding registration and the payment of a fee."

6. After rule 47 of the said Rules, the following rule shall be inserted, namely:—

"47-A. An Approved Accountant shall, on completion, discontinuance or termination otherwise of the service of an articled clerk in his employment, send a report to that effect to the Secretary to the Government of India in the Department of Commerce. Such a report shall have been signed by both the employer and the articled clerk."

7. In Appendix 2 to the said Rules:—

(1) In Forms D and E—

(*i*) in clause 1, for the words "from the date of this deed" the words "from the .....day of ....." shall be substituted;

(*ii*) in clause 2, the words "from the day of the date hereof" shall be omitted.

(2) To sub-clause (*d*) of clause 4 in Form D, and to sub-clause (*d*) of clause 5 in Form E, the following proviso shall be added, namely:—

"Provided that in case of illness he will allow the articled clerk, on production of a certificate from a registered medical practitioner, leave of absence for an additional period of 30 days for each year of completed service."

(3) After Form F, the following Form shall be inserted namely:—

FORM G.

(*See rule 47.*)

ASSIGNMENT OF ARTICLES made the .....day of.....One thousand nine hundred and thirty.....BETWEEN..... .... of.....(hereinafter called "the Employer") of the first part,..... .....of..... (hereinafter called "the Guardian*") of the second part,..... .son of the said .....(hereinafter called "the Articled Clerk") of the third part and..... of.....carrying on the business of.....at..... (hereinafter called "the New Master") of the fourth part.

WHEREAS by Articles of Apprenticeship dated..... and made between the Employer of the first part the Guardian of the second part and the Articled Clerk of the third part the Articled Clerk was bound apprentice to the Employer in the practice or profession of accountancy for a term of .....years from the..... .....day of 193 .....

AND WHEREAS it has been agreed that the Articled Clerk shall serve the now unexpired residue of the said term with the New Master being an accountant borne on the list of Approved Accountants maintained under the Auditor's Certificates Rules, 1932, and the Employer has agreed with the consent of the Guardian and of the Articled Clerk to assign the said Articles of Apprenticeship to the New Master.

NOW THIS DEED OF ASSIGNMENT WITNESSETH as follows:—

1. The Employer hereby assigns the said Articles of Apprenticeship and all his interest therein and the benefit of all covenants therein contained to the New Master to hold the same for all the residue now unexpired of the said term of.....years.

**Note.*—If the Articled Clerk is of age the reference to Guardian will be omitted and certain consequential alterations necessitated.

2. The New Master covenants with the Employer the Guardian and the Articled Clerk and with each of them separately—

(*a*) That he will take the Articled Clerk as his Articled Clerk for the now unexpired residue of the said term in order that he may complete his studies and acquire the art science and knowledge of accountancy.

(*b*) That he will observe and perform all the covenants in the said Articles contained and on the part of the Employer to be observed and performed in like manner in all respects as if he the New Master were therein named instead of the Employer and will keep the Employer indemnified from the same and from all actions claims or demands in respect thereof.

3. The Guardian and the Articled Clerk severally covenant with the New Master—

(*a*) That the Articled Clerk shall diligently and faithfully serve the New Master as his apprentice in his profession of accountancy for all the residue now unexpired of the said term.

(*b*) That they and each of them will observe and perform all the covenants in the said Articles contained and on their part to be performed in like manner in all respects as if the New Master were therein named instead of the Employer.

4. This Deed of Assignment is in accordance with the provisions of Rule 47 of the Auditor's Certificates Rules, 1932, and is subject in all respects to such Rules.

IN WITNESS whereof the parties have hereunto set their respective hands the day and the year first above written.

Executed by.....
.....
in the presence of..+.... } "the Employer" of the first part.

Executed by.....
.....
in the presence of..... } "the Guardian" of the second part.

Executed by.....
.....
in the presence of..... } "the articled clerk" of the third part.

Executed by.....
.....
in the presence of..... } "the New Master" of the fourth part.

H. DOW,
Addl. Secy. to the Govt. of India.

DEPARTMENT OF INDUSTRIES AND LABOUR.

NOTIFICATIONS.

Simla, the 5th August 1936.

No. M.-1055.—In exercise of the powers conferred by sections 29 and 31-A of the Indian Mines Act, 1923 (IV of 1923), as amended by the Indian Mines (Amendment) Act, 1936 (XI of 1936), the Governor-General in Council is pleased to make the following amendment in the Supplementary Coal Mines (Temporary) Regulations, 1936, namely:—

To regulation 3 of the said Regulations the following proviso shall be added, namely:—

"Provided that in the case of any mine an exemption may be given by the Chief Inspector on the ground that, on account of the special character of the mine, the prohibition of the use of explosives other than 'Permitted Explosives' is not necessary."

The 6th August 1936.

No. L.-1750.—In exercise of the powers conferred by section 28 of the Indian Boilers Act, 1923 (V of 1923), the Governor-General in Council is pleased to direct that the following further amendments shall be made in the Indian Boiler Regulations, 1924, the same having been previously published as required by sub-section (*1*) of section 31 of the said Act, namely:—

In regulation 156 of the said Regulations—

(1) for the words "Bihar and Orissa" the word "Bihar" shall be substituted;

(2) for the entry

"Punjab ... ... P.B."

the following entries shall be substituted, namely:—

"Orissa ... ... O.
Punjab ... ... P.B.
Sind ... ... S."

A. G. CLOW,
Secy. to the Govt. of India.

Registered No. C207

The Calcutta Gazette

THURSDAY, AUGUST 20, 1936.

PART IB

Educational Notices.

Chittagong Division.

Chittagong, the 23rd July 1936.

Rules for the admission of private candidates to the Calcutta University Intermediate and B.A. Examinations.

1. Subdivisional Inspectors of Schools, Sub-Inspectors of Schools and *bona fide* teachers of English schools, who have served as such for the full period of three academical years preceding the examinations, will be admitted to the abovementioned examinations.

2. Candidates for the Intermediate and B.A. Examinations must produce certificates of character and length of service from the Secretaries of their respective schools. Candidates for the B.A. Examination must forward with their application their F.A. or I.A. certificates and those for the Intermediate Examination their Entrance or Matriculation certificates. Candidates admitted to a former examination must produce the Registrar's receipt in addition.

3. Under section 19 of the Indian Universities Act, candidates for the Intermediate and B.A. Examinations are informed that their applications for admission to these examinations will not be considered unless they enclose with their applications to this office the sanction of the Senate to appear at the said examinations. Candidates, who have applied for or have obtained the special permission of the Senate for the purpose, are required under section 9, Chapter XV of the Revised Regulations dealing with the registration of University students, to apply at once, to the Registrar for the registration of their names as University students. No person will be deemed a "University student" unless and until his name has been duly registered, and none but "University students" will be eligible for admission to any University Examination other than the Matriculation.

4. The printed form of application should be carefully and correctly filled in and submitted to this office on or before the 18th December 1936 at the latest, together with other papers as mentioned in rules 2 and 3, after which no application will be received.

5. The dates of Intermediate and B.A. Examinations of 1937 may be obtained from the Controller of Examinations, Calcutta University.

B. Rahman,
Inspector of Schools,
Chittagong Division (offg.).

Rajshahi Division.

NOTIFICATION.

Jalpaiguri, the 1st August 1936.

Rules for Examination in the Art and Practice of Teaching.

An examination in the Art and Practice of Teaching for the teachers of subjects taught through the medium of English employed in aided and unaided schools in the Rajshahi Division will be held on the 15th September 1936 and the day following, if required, at the Jalpaiguri Zilla School.

The examination for teachers of all subjects taught through the medium of vernacular and oriental classical languages of secondary schools will also be held at the centre on the dates mentioned above.

2. The following teachers are eligible for examination:—

(*a*) Teachers who have passed the Entrance or the Matriculation Examination or some higher examination of a recognised University. The examination of these teachers will be conducted through the medium of English or vernacular according to their option.

(*b*) Teachers of vernacular subjects who have passed the Middle Scholarship Examination or the terminal examination at the end of the middle stage of instruction or the Junior Madrasah Examination. The examination of these teachers will be conducted only in the vernacular.

(*c*) Pandits and Maulvis employed in teaching oriental classical languages other than Pandits in Sanskrit Tols and Maulvis in Madrasahs. They may be permitted to appear at the examination and at their option may be examined either in English or in vernacular.

3. The examination will consist of—

(*a*) A practical test in class control, the candidate being required to keep a class of at least a dozen boys attentive and fully occupied throughout a lesson.

(*b*) A practical test in teaching ability, the candidate being required to give two lessons on any two of the following subjects:—

(*i*) Science, Nature Study, Hygiene, English, Bengali, History, Geography, Arithmetic, Algebra or Geometry.

(*ii*) A written test for one and a half hours in which the Inspector of Schools or other examiners will set questions an the art of teaching, object lesson, class management, organisation and discipline.

4. The following books are recommended:—

(*a*) *For teachers teaching through the medium of vernacular—*

(1) Teachers' Manual by Khan Bahadur Ahsanullah.
(2) Bidyalaya Bisayak Bibidha Bidhan by A. N. Adhikari.
(3) Sikha Bijnan by Khan Bahadur Abdur Rahman Khan.
(4) Byabaharik Manobijnan by S. C. Brahmachari.
(5) Padtika Likhibar Paddhati by Jagannath Dey.

(*b*) *For Matriculate and I.A. passed teachers teaching through the medium of English—*

(1) Talks to Teachers (James).
(2) Mental and Physical Life of School Children by Sandiford.
(3) The Play Way by Cook.
(4) Indian School Organisation by P. Wren.
(5) Indian Teachers' Guide by P. Wren.
(6) Suggestions for the consideration of Teachers—Board of Education, London.
(7) Art of Teaching by Salmon.

(*c*) *For graduate teachers teaching through the medium of English—*

Nos. (1), (2), (4), (5) and (6) under Group (*b*), and the following books:—

(1) Education on Dalton Plan by Parkhurst.
(2) Principles of Education by Ruediger —George G. Harrap & Co., London.
(3) General Methods of Teaching —By Parker-Ginn & Co.

5. Intending candidates from High Schools, Government, aided and unaided, should send in their applications to this office through the Head Masters of the respective schools in which they are employed at least one month before the date of examination and teachers of Middle Schools and Junior Madrasahs through the District Inspector of Schools at least four weeks before the date. Every candidate will be required to produce his University or other certificates at the time of examination. A statement containing information on the following points should accompany the application:—

(1) Name in full.
(2) Father's name in full.
(3) Age on the 1st September 1936.
(4) Native district, subdivision, village, post office.
(5) The last examination which the candidate passed and the year of passing.
(6) Period of service as a teacher.
(7) Present appointment with date (mention whether he is a teacher of English subjects or vernacular subjects or of oriental languages). Mention also the language through the medium of which the candidate wants to be examined.
(8) Two class subjects which the candidate wishes to offer for practical test in teaching.
(9) Signature of the candidate.

6. Every candidate must bring with him at the time of examination two lesson notes on the subjects in which he wishes to give lessons. These notes should be made over to the examiner at the time of the practical examination.

Candidates should state whether they sat for the examination previously, if so, how often, giving dates.

P. C. MUKHERJI,
Inspector of Schools, Rajshahi Division.

(Approved by the Executive Council, dated the 6th August 1936.)

University of Dacca.

Ramna, Dacca, the 6th August 1936.

Time-table for the B. A., B.Sc., B. Com. and B.T. and L. T. Examinations of 1937.

(The order of subjects given in the Time-table is liable to changes in detail.)

B.A. and B.Sc. Ordinary and Subsidiary Examinations and B.Com. Examinations, 1937.

1937.	Time—10 a.m. to 1 p.m.	Time —2 p.m. to 5 p.m.
Wednesday, February 10	.. English, Paper I	.. English, Paper II.
Thursday ,, 11	.. English, Paper III	.. Economics, Paper I.
Saturday ,, 13	.. Economics, Paper II	.. Economics, Paper III.
Saturday ,, 20	.. History, Paper I	.. History, Paper II.
Monday ,, 22	.. History, Paper III	.. Politics, Paper I.
Tuesday ,, 23	.. Politics, Paper II	.. Politics, Paper III.
Wednesday ,, 24	.. Vernacular	.. (1) Sanskrit, Paper I. (2) Bengali, Paper I. (3) Persian, Paper I.
Thursday ,, 25	.. (1) Sanskrit, Paper II (2) Bengali, Paper II (3) Persian, Paper II	.. (1) Sanskrit, Paper III. .. (2) Bengali, Paper III. .. (3) Persian, Paper III.
Saturday ,, 27	.. (1) Arabic, Paper I (2) Islamic Studies, Paper I (3) Physics, Paper I	.. (1) Arabic, Paper II. .. (2) Islamic Studies, Paper II. .. (3) Physics, Paper II.
Monday, March 1	.. (1) Arabic, Paper III (2) Islamic Studies, Paper III (3) Chemistry, Paper I. (4) Accountancy Paper for the B.A. Ordinary Examination.	.. (1) Philosophy, Paper I. .. (2) B. Com. Paper—Economic Geography.
Tuesday ,, 2	.. (1) Philosophy, Paper II (2) B. Com. Paper—Business Organisation including Commercial correspondence.	.. (1) Philosophy, Paper III. (2) B. Com. Paper—Elements of Economics.
Wednesday ,, 3	.. (1) Mathematics, Paper I (2) B. Com. Paper—Trade and Transport.	.. (1) Mathematics, Paper II. (2) B. Com. Paper—Modern Economic Development.
Thursday ,, 4	.. (1) Mathematics, Paper III. (2) B. Com. Paper—Commercial Law.	B. Com. Paper—Banking and Currency.

Time—11 a.m. to 3 p.m.

Saturday, ,, 6	.. B. Com. Paper—Advanced Accounting and Auditing, Paper I.
Monday, ,, 8	.. B. Com. Paper—Advanced Accounting and Auditing, Paper II.
Tuesday, ,, 9	.. B. Com. Paper—Advanced Accounting and Auditing, Paper III.

B. A. Honours Examination, 1937.

Time—11 a.m. to 3 p.m.

1937.	
Tuesday, March 9	.. Honours Paper I and Islamic Studies Honours, Paper I.
Wednesday ,, 10	.. Honours Paper II and Islamic Studies Honours, Paper II.
Saturday ,, 13	.. Honours Paper III and Islamic Studies Honours, Paper VII (same as Arabic Honours, Paper III).
Monday ,, 15	.. Honours Paper IV and Islamic Studies Honours, Paper VIII (same as Arabic Honours, Paper IV).
Tuesday ,, 16	.. Honours Paper V and Islamic Studies Honours, Paper III.
Wednesday ,, 17	.. Honours Paper VI and Islamic Studies Honours, Paper IV.
Thursday ,, 18	.. Honours Paper VII and Islamic Studies Honours, Paper V.
Saturday ,, 20	.. Honours Paper VIII and Islamic Studies Honours, Paper VI.

B. Sc. Honours Examination, 1937.

Time—11 a.m. to 3 p.m.

1937.			
Tuesday,	March	9	.. (1) Physics Honours, Paper I. (2) Chemistry Honours, Paper I.
Wednesday	,,	10	.. (1) Physics Honours, Paper II. (2) Chemistry Honours, Paper II.
Saturday,	,,	13	.. (1) Physics Honours, Paper III. (2) Chemistry Honours, Paper III.
Monday	,,	15	.. (1) Physics Honours, Paper IV. (2) Chemistry Honours, Paper IV.
Tuesday	,,	16	.. Physics Honours, Paper V (also Paper XIV of the B. Sc. Combined Honours Examination in Mathematics and Physics).

B. A. and B. Sc. Honours Examination in Mathematics, 1937, and Honours Examination of the Combined Course in Mathematics and Physics, 1937.

Time—11 a.m. to 3 p.m.

1937.				Mathematics General Course.	Combined Honours in Mathematics and Physics.
Monday,	March	1	..	....	Paper VI.
Tuesday	,,	2	..	....	Paper VII.
Wednesday	,,	3	..	....	Paper IX.
Thursday	,,	4	..	....	Paper XII.
Saturday	,,	6	..	....	Paper XIII.
Monday	,,	8	..	Paper I	.. Paper I.
Tuesday	,,	9	..	Paper II	.. Paper II.
Wednesday	,,	10	..	Paper III	.. Paper III.
Saturday	,,	13	..	Paper IV	.. Paper V.
Monday	,,	15	..	Paper V	.. Paper IV.
Tuesday	,,	16	..	....	.. Paper XIV (same as Physics Honours, Paper V).
Wednesday	,,	17	..	Paper VI	.. Paper VIII.
Thursday	,,	18	..	Paper VII	.. Paper X.
Saturday	,,	20	..	Paper VIII	.. Paper XI.

B.Sc. Pass and Honours Practical Examinations, 1937.

(*i*) The Practical Examination in Physics and Chemistry will be held after the Theoretical Examinations in those subjects are over.

(*ii*) Candidates for the B.Sc. Pass and Honours Examinations must ascertain from the heads of the departments of Physics and Chemistry the exact date, time and place of their Practical Examination.

B.A. Honours, Viva Voce and Practical Examinations, 1937.

(*i*) Candidates for the B.A. Honours Examination must ascertain from the heads of the departments concerned the exact date, time and place of their Viva Voce Examination.

(*ii*) Candidates for the B.A. Honours Examination in Philosophy must ascertain from the head of the department of Philosophy the exact date, time and place of their Practical Examination.

Practical and Viva Voce Examinations of the Combined Course in Mathematics and Physics, 1937.

Candidates for the Final Honours Examination of the Combined Course in Mathematics and Physics must ascertain from the heads of the departments of Physics and Mathematics the exact date, time and place of their Practical and Viva Voce Examinations.

B.Sc. Honours Examination in Mathematics, 1937.

Candidates for the B.Sc. Honours Examination in Mathematics must ascertain from the head of the department of Mathematics the exact date, time and place of their Viva Voce Examination.

B.T. and L.T. Examinations, 1937.

1st to 4th March and 6th March, 1937. Moderation of Class Records in Practice Teaching.

Time—8 a.m. to 11 a.m.

1937.			
Saturday,	March	13	.. Special Subjects (Method of Teaching Special subjects).
Monday	,,	15	.. Educational Psychology.
Tuesday	,,	16	.. Principles of Teaching.

Time—8 a.m. to 10 a.m.

1937.			
Wednesday,	March	17	.. Educational Measurements (Ordinary Course).
Thursday	,,	18	.. Physical Life.
Saturday	,,	20	.. Educational Measurements (Special Proficiency Course).
Thursday,	April	8	.. Viva Voce.

N. AHMAD, *Registrar.*

University of Dacca.

Ramna, Dacca, the 11th August 1936.

Faculty of Science.

Session 1936-37.

The following syllabus for the Joint B.Sc. Honours Course in Mathematics and Physics for the session 1936-37 is published for general information.

Fourteen theoretical papers, a practical examination (including a *Viva Voce* Examination) in Physics and a *Viva Voce* Examination on the theoretical papers.

PART I.

(Examination to be held in 1938.)

I. Algebra (including Theory of Equations) and Trigonometry.
II. Analytical Goemetry of Conics and Solid Geometry.
III. Differential and Integral Calculus (including applications to the Geometry of curves).
IV. Elementary Theory of Functions of a Real Variable.
V. Statics and Vectors.
VI. Heat and Thermodynamics.
VII. Practical Examination (including a *Viva Voce* Examination).

PART II.

(Examination to be held in 1939.)

VIII. Elementary Theory of Functions of a Complex Variable.
IX. Differential Equations.
X. Hydrostatics and Astronomy.
XI. Dynamics (including both Particle and Rigid Dynamics).
XII. Theory of Vibrations.
XIII. Electricity and Magnetism.
XIV. Modern Physics.
XV. General Physics.

The *Viva Voce* Examination on the theoretical papers will be held along with the examination in Part II.

Detailed Syllabuses.

Mathematics.

(The syllabus for Astronomy is the same as for the Ordinary B.Sc. degree.)

As regards the remaining subjects, in addition to the syllabuses laid down for the corresponding subjects in the Honours School of Mathematics, the following are prescribed:—

Hydrostatics—Tension of flexible surfaces.
Functions of a Real Variable—Fourier's Series.
Differential Equations—Selected topics from Partial differential equations of Mathematical Physics.
Solid Geometry—The elementary properties of twisted curves.
In the syllabus for Differential Calculus the following are to be omitted:—

Simple singularities, tracing of simple curves.

Paper VI.—Heat and Thermodynamics.

Measurement of temperature and expansions, calorimetry, changes of states, properties of gases and vapours, hygrometry, laws of heat conduction, continuity of states. Steam engine. The Laws of Thermodynamics and their applications. Equilibrium of systems, Phase rule, the Nernst heat theorem.

Theory of Radiation: Law of Exchange, Laws of Kirkchhoff, Stefan, Wien and Planck.

Paper XII.—Theory of Vibrations.

Small oscillations. Elastic deformations, Stress and Strain, Energy of deformation, forced and free Vibrations, Resonance, Vibrations of strings and membranes. Harmonic analysis. Wave motion in air and elastic media. Huyghen's Principle. Wave theory of Light. Wave Surface in isotropic and crystalline media; diffraction and interference of waves.

Paper XIII.—Electricity and Magnetism.

Statical Electricity. Potential and energy of electrical systems. Capacity, the dielectric, Polarisation, Magnetic fields, induced Magnetisation. Magnetic properties of materials, susceptibility and permeability; para—, ferro—, and diamagnetism. The electric current, Ohm's Law. Heating and magnetic effects of currents. Electrolysis. Thermo-electricity. Electro-magnetic induction. Growth and decay of currents. Alternating currents. Units and dimensions of electromagnetic quantities. Electromagnetic radiations, Maxwell's displacement theory. Fundamental Equations of Electromagnetism; early experimental verifications. Simple theory of electromagnetic waves, their reflection and refraction.

Paper XIV.—Modern Physics.

Gaseous conduction, atomic nature of Electricity, electrons, determination of charge and mass; X-rays, methods of production; flourescent and continuous radiations. Work of Barkla, Mosely and Bragg, determination of wave-length, Radio-activity. Properties of Radium and its rays. Elementary ideas of Quantum theory. Photoelectric emission; measurement of h.

Paper XV.—General Physics.

Units and dimensions of Physical quantities. Measurement of length, mass and time. Laws of motion: Gravitation; earth's Gravitational field. Gravitational potential. Potential of Simple bodies, spheres and spheroids. Equipotentials and lines of force. Gauss' theorem. Laplace's and Poisson's Equations. Simple types of solution. Transmission of pressure in liquids. Equilibrium of floating bodies. Liquids in motion. Simple irrotational motion. Bernoulli's theorem. Turbines and pumps. Viscosity. Viscous friction; flow through pipes; surface-tensions and capillarity.

Elementary Kinetic theory of gases and fluids.

Practical Physics.

First Year Honours.

General Properties.

1. Use of Slide Rules.
2. Determination of densities and dimensions using verniers, calipers, screw gauge, etc.
3. Spherometer—

(*a*) Determination of the thickness of a plate,

(*b*) Determination of the radius of curvature of a spherical surface.

4. The balance; accurate weighing, etc.
5. Specific gravity by the specific gravity bottle.
6. Young's modulus by stretching (Searle's method).
7. Borda's pendulum.
8. Kater's pendulum.
9. Surface tension by capillary tube.

Sound.

1. Resonance tube. Velocity of sound and end correction.
2. Sonometer. Verifications of the laws of length and tension.
3. Kundt's tube (brass, air and carbon dioxide).

Light.

1. f. of a concave mirror.
2. f. of a convex mirror.
3. f. of a concave lens.
4. f. of a convex lens.
5. μ. by a microscope.
6. Angular magnification of telescope (measurement of linear magnification at a large distance).

Heat.

1. Expansion of a solid.
2. Constant volume air-thermometer.
3. Variation of density of water (Mathiessen's method).
4. Specific heat of a solid or a liquid (method of mixture) with radiation correction
5. Latent heat of steam.
6. Verification of Newton's law of cooling and specific heat of a liquid by cooling.

Magnetism.

1. M/H by mirror magnetometer.
2. M and H.
3. The Dip circle.

Second Year Honours.

1. Moment of inertia of a fly wheel.
2. Rigidity by method of oscillation (dynamic method)
3. Rigidity by twisting (Static method).
4. Young's modulus by flexure
5. Surface tension of mercury
6. Viscosity of a liquid by capillary flow method

Heat.

1. Determination of J: (Calendar's apparatus).
2. Conductivity of copper.
3. Ratio of specific heats of air.

Electricity.

1. Wheatstone's Bridge, end corrections and resistivity of wires
2. P O Box: law of resistance.
3. Comparison of two nearly equal resistances.
4. Galvanometer resistance.
5. Potentiometer Comparison of E.M.F.
6. Calibration of a bridge-wire.
7. Measurement of low resistance—Fall of potential method
8. Thermocouple
9. Platinum Resistance.
10. Silver Voltameter.

Light.

1. Newton's rings.
2. Spectrometer—
   (*a*) μ. of prism by minimum deviation and
   (*b*) diffraction-grating.
3. Polarimeter.

N. AHMAD, *Registrar.*

Office of the Director of Public Instruction, Bengal.

NOTIFICATION.

Calcutta, the 13th August 1936.

Special Senior Scholarships, 1936.

The following students are awarded the above scholarships on the combined results of the Intermediate Examinations in Arts and Science of Calcutta University held in 1936. The scholarships take effect from 1st June 1936 for two years.

(Principals of Colleges are requested to report to the Director of Public Instruction, Bengal, the names of the holders of the scholarships as soon as they are admitted No scholarship can be drawn until this information is available with respect to every scholarship-holder):—

Nineteen Special Scholarships of Rs. 10 a month each for Muhammadans.

Calcutta.

1	M. Fazlur Rahman	..	Presidency College.
2	Anwara Haque	..	Bethune College.
3	Mojibur Rahman	..	Islamia College.
4	Rashiduz Zaman	..	Ditto.
5	Alimul Ehsan	..	Ditto.

Presidency Division.

1	Syed Haidar Ali	..	Bagerhat P. C. College.
2	Md. Abul Qasem	..	Berhampur K. N. College.
	Khondker Abdul Jabber	..	Ditto.

Burdwan Division.

1	Md. Abdur Rouf	..	Hughli College.
2	Shaikh Mohammad Faruque	..	Burdwan Raj College.
3	Shomsher Alam Siddique	..	Ditto.

Dacca Division.

1	Md. Innas Ali	..	Mymensingh A. M. College.
2	Mir Mohammad Idris Aley	..	Faridpur Rajendra College.

Chittagong Division.

1	Moqbul Ahmad	..	Chittagong College.
2	Nurul Islam	..	Non-collegiate student (Feni College).
3	Nuruzzaman	..	Feni College.

Rajshahi Division.

1	Md. Fazlur Rahman	..	Rangpur Carmichael College.
2	Elias Ahmed	..	Rajshahi College.
3	Md. Ekramul Haque	..	Rangpur Carmichael College.

Two Darbhanga Madrasah Scholarships of Rs. 10 a month each.

1	A. S. M. Abdul Latif	..	Presidency College.
2	Badruddin Md. Shahed	..	Ditto.

Two Special Scholarships of Rs. 15 a month each for the educationally backward classes.

1	Bibhutiranjan Mandal	..	Mymensingh A. M. College.
2	Rohinath Pramanik	..	Rajshahi College.

Three Special Scholarships of Rs. 15 a month each for the educationally backward classes tenable in any approved educational institution or University in Bengal only.

1	Brajendranath Sikdar	.. Barisal B. M. College.
2	Harishchandra Mandal	.. Bagerhat P. C. College.
3	Basudeb Bala	.. Daulatpur Hindu Academy.

J. M. BOTTOMLEY,
Director of Public Instruction, Bengal.

Office of the Director of Public Instruction, Bengal.

NOTIFICATION.

Calcutta, the 13th August 1936.

Special Senior Scholarships for Muhammadans, 1936.

The following students are awarded the above scholarships on the combined results of the Intermediate Examinations in Arts and Science of Calcutta University held in 1936. *The scholarships are tenable in any approved educational institution or University in Bengal only* for two years, with effect from 1st July 1936.

(Principals of Colleges are requested to report to the Director of Public Instruction, Bengal, the names of holders of the scholarships as soon as they are admitted. No scholarships can be drawn until this information is available with respect to every scholarship-holder) :—

Six Scholarships of Rs. 10 a month each.

Calcutta.

Mohammad Abdul Moqtadir .. Islamia College.

Presidency Division.

Qadir Baksh Mondal .. .. Krishnagar College.

Burdwan Division.

Mahammad Hossain Ali .. Bankura College.

Dacca Division.

Abu Md Motahar .. .. Karatia Saadat College.

Chittagong Division.

Siddiq Ahmad .. .. Chittagong College.

Rajshahi Division.

S. K. Abdus Satter .. .. Pabna Edward College.

J. M. BOTTOMLEY,
Director of Public Instruction, Bengal.

Orders by the Vice-Chancellor and Syndicate of the Calcutta University.

Senate House, the 20th August 1936.

I. The undermentioned candidates are declared to have passed the I. E. Examination held in July 1936 :—

(In order of merit.)

Bengal Engineering College, Sibpur.

1 Sen, Saralkumar.
2 Md. Mahiruddin Choudhury.
3 Ghosh, Rajanikumar.*
4 Nandi, Sukumar.*
5 Mitra, Sudhansu.
6 Sengupta, Sachchidananda.
7 Md. Aolad Hosain.
8 Amolok Ram Khosla.
9 Basu, Bishnucharan.*
10 Sarkar, Ramprasad.
11 Sen, Dhrubatosh.
12 Brahma, Hitendramohan.
13 Chakarbarti, Bipranath.
14 Bandyopadhyay, Sureschandra.
15 Bhattacharyya, Sanatkumar.
16 Basu, Subodhranjan.
17 Dasgupta, Ranajitkumar.
18 Chattopadhyay, Debaprasad.
19 Chakrabarti, Prabhatchandra.
20 Bandyopadhyay, Rabindranath.
21 Chattopadhyay, Sureschandra.
22 Chakrabarti, Jatindrachandra.
23 Mukhopadhyay, Syamapada.
24 Datta, Nirmalchandra.
25 Guha, Manindranath.
26 Basu, Haridas.
27 Ghosh, Asitranjan.
28 Das, Rabindranath.
29 Syed Abdur Rashid.
30 Basu, Sukumar.
31 Bery, Pannalal.
32 Sarkar, Amarendranath.
33 Das, Surendranath.
Sengupta Bishnupada.
35 Salamatullah Miah.
36 Das, Arunchandra.
37 Ghosh, Praphullakumar.
38 Bandyopadhyay, Sailendranath.
39 ,, Sailendramohan.
40 Md. Anwaruzzaman.

II. The undermentioned candidates are declared to have passed the I. E. Examination, Section A, held in July 1936 :—

(In alphabetical order.)

Bengal Engineering College, Sibpur.

A. F. M. Mirza Shamsul Huda.
Amolok Ram Khosla.
Arratoon, Victor Gregory.
Basu, Haridas.
,, Indubhushan.
,, Prabhatkumar.
,, Rameschandra.
Batra, Jagan N.
Chattopadhyay, Kamalaprasanna.
10 ,, Ranjitmohan.
Chaudhuri, Asitbaran.
Das, Arunchandra.
Datta, Achyutnanda.
Dharray, Bijaykumar.
Fosberry, Cyril Vincent.
Gangopadhyay, Asokkumar.
,, Prasannakumar.
Ghosh, Asitranjan.
Guhathakurta, Ajitkumar.
20 Gupta, Dilipkumar.
Habibur Rahman.
Mallik, Radhakanta.
,, Satyendranath.
Mandal, Jaminikanta.
Mukhopadhyay, Chandrasekhar.
Pal, Syamalendu.
Ray, Himansu.
,, Jitendranath.
,, Labanyamohan.
30 ,, Priyadarsan.
Raychaudhuri, Nepalchandra.
Samanta, Brindaban.
Sen, Buddhadeb.
,, Renubhushan.
35 Sengupta, Sudhansu.

II (*a*). The undermentioned candidates have qualified in the groups shown against their names in Section A of the I. E. Examination held in July 1936 :—

(M) Indicates Mathematics.
(C) ,, Chemistry.
(P) ,, Physics.

(In alphabetical order.)

Bengal Engineering College, Shibpur.

Bhattacharyya, Sureschandra (M) (C) (2).
Chakrabarti, Debkumar (M) (C) (2).
Chattopadhyay, Amiyakumar (C) (P) (1).
Dasgupta, Kshitindranath (M) (C) (2).
Ghosh, Sudhansukumar (C) (P) (1).
Md. Afsar Ali Malita (M) (P) (3).
Mukhopadhyay, Binaykumar (M) (C) (2).
8 ,, Debabrata (M) (C) (2).

(1) Candidates will be required to appear again in Mathematics.
(2) Candidates will be required to appear again in Physics.
(3) Candidates will be required to appear again in Chemistry.

III. The undermentioned candidates are declared to have passed the B. E. Examination (Civil Engineering Branch) held in July 1936 :—

SECOND CLASS.

(In order of merit.)

Bengal Engineering College, Shibpur.

1 Basu, Rabindranath.
2 Ray, Kamalprasanna.
3 Furtado, Leonard.
4 Sinha, Ajitkumar.
5 Abdul Latif.
6 Ghosh, Biswanath.
7 Sanyal, Praphullakumar.
8 Ray, Haripada.*
9 Mosharrefuddin Ahmed.
10 Bandyopadhyay, Indusekhar.
11 Mukhopadhyay, Nirendranath.
12 De, Jagadischandra.
13 Sinha, Ajitmohan.
14 Munshi Sharafat Hossain.
15 Datta, Saratchandra.
16 Senkabiraj, Hrishikes.
17 Datta, Durga.
18 Ghosh, Bidhubhushan.
19 Chaudhuri, Syamakanta.
20 Majumdar, Indubhushan.
21 Abdul Matin.
22 Mirza Faiz Ahmed.*
23 Dasgupta, Sukumar.
24 Chattopadhyay, Sudhananda.
25 Sur, Sanatkumar.

*Non-collegiate student.

*Non-collegiate student.

IV. The undermentioned candidates are declared to have passed the B. E. Examination (Non-Professional Section, Civil Engineering Branch) held in July 1936 :—

(In alphabetical order.)

Bengal Engineering College, Sibpur.

Bandyopadhayay, Ranajitkumar.
,, Sudhansukumar.
Basu, Amitabha.
,, Kalidas.
Chattopadhyay, Pranabkumar.
Ghosh, Chittapriya.
,, Sarojkumar.
Guha, Manikanta.
Guhamajumdar, Dhirendranath.
10 Kar, Kanaichandra.
Khondkar A. M. Md. Fakhrul Islam.
Kumar, Baradakanta.
Mahammed Salehuddin.
Maiti, Gajendranath.
Majumdar, Kunjalal.
Misra, Aswinikumar.
Rakshit, Rammohan.
18 Shamsuddin Mohammad Abed.

IV(*a*). The undermentioned candidates have qualified in the group noted against their names, of the B. E. Examination (Non-Professional Section, Civil Engineering Branch) held in July 1936 :—

(S) Indicates Science.

(In alphabetical order.)

Bengal Engineering College, Sibpur.

Mitra, Suprabhatchandra (S)(1).

2 Vedaprasad Prodhan (S)(1).

(1) Candidates will be required to appear again in Mathematics.

V. The undermentioned candidates are declared to have passed the B. E. Examination (Mechanical Engineering Branch) held in July 1936 :—

SECOND CLASS.

(In order of merit.)

Bengal Engineering College, Sibpur.

1 Ghosh, Sasirkumar.
2 Ray, Sarojranjan.
3 Sanyal, Asokkumar.
4 Ghosh, Satyasadhan.
5 Aziz Ahmed Md. Hossain.
6 Gupta, Brajendranath.

VI. The undermentioned candidates are declared to have passed the B. E. Examination (Non-Professional Section of the Mechanical Engineering Branch) held in July 1936 :—

(In alphabetical order.)

Bengal Engineering College, Sibpur.

Aziz Ahmed Md. Hossain.
Bandyopadhyay, Prabhatkusum.
Basak, Bireswar.
Basu, Binayendramohan.
Bhar, Manoranjan.
Ghosh, Sisirkumar.
,, Tinkari.
Ray, Sailendraprasad.
9 Syed Kazim Ali.

VII. The undermentioned candidates are declared to have passed the B. E. Examination (Electrical Engineering Branch) held in July 1936 :—

CLASS I.

(In order of merit.)

Bengal Engineering College, Sibpur.

1 Bandyopadhyay, Ramendranath.
2 Chattopadhyay, Sibapada.

CLASS II.

Bengal Engineering College, Sibpur.

Md. Mahibul Majid.

VIII. The undermentioned candidates are declared to have passed the B. E. Examination (Non-Professional Section, Electrical Engineering Branch), held in July 1936 :—

(In alphabetical order.)

Bengal Engineering College, Sibpur.

Bandyopadhyay, Pankajkumar.
,, Ramendranath.
Basu, Indubhushan.
Chattopadhyay, Sibapada.
Duckworth, Horace E.
Gangopadhyay, Praphullachandra.
Pal, Haribol.
8 Sur, Khagendranath.

VIII(*a*). The undermentioned candidate has qualified in the group noted against his name, of the B. E. Examination (Non-Professional Section, Electrical Engineering Branch) held in July 1936 :—

M indicates Mathematics.

Bengal Engineering College, Sibpur.

Kanjilal, Amalkumar (M)(1).

(1) Candidate will be required to appear against in Science.

B. B. DUTT,
Controller of Examinations.

Department of Industries, Bengal.

Serampore, the 13th August 1936.

Result of the Final Diploma Examinations of the Higher Class of the Government Weaving Institute, Serampore, for the session 1935-36.

Serial No.	Names of successful students in order of merit.
	1st Class.
1.	Munindra Lal Nath.
2.	Monmotha Nath Bhattacharyya.
	2nd Class.
3.	Paresh Chandra Bhadra.
4.	Hiranmoy Mukherjee.
5.	Rabindra Nath Basu.
6.	Sushil Chandra Kumar.
	3rd Class.
7.	Jyotirindu Kumar Das.
8.	Promode Krishna Sarma Acharyya.
9.	Suryya Lal Bhattacharya.
10.	Nihar Nath Mookherjee.
11.	Satyabrata Chakraverty.
12.	Subodh Kumar Chatterjee.
13.	Balananda Mukherjee.
14.	Murari Mohan Ray.
15.	Shunil Kumar Basu Ray Choudhury.
16.	Sailendra Mohan Dutta.

B. C. BHATTACHARYA, *Principal,*
Govt. Weaving Institute, Serampore.

ERRATUM.

The 8th August 1936.

In the list of successful candidates at the Primary (Maktab) Final Examination held in November 1935, published under this office notification, dated 7th January 1936, at page 213 of Part IB of the *Calcutta Gazette*, dated 23rd January 1936, against Roll No. 57 of the Madaripur centre—

for

*Pramathanath Bandopadhyya ... II

please read

*Pramathanath Chattapadhyaya ... II

ABUL HASHEM KHAN CHOUDHURY,
Inspector of Schools.

University of Dacca.

Ramna, Dacca, the 10th August 1936.

NOTICE.

The following syllabus for a theoretical paper in Bio-Chemistry as alternative to the paper on Applied Chemistry in the M.Sc. Examination, Part II (1937), is published for general information:—

Chemistry of food and nutrition with special reference to—

(1) Enzymes and digestion.
(2) Fate of carbohydrates; fats and proteins in metabolism.
(3) Nutritional Chemistry of proteins with reference to (*a*) Biological value of proteins, (*b*) the essential amino acids and (*c*) Supplementary relation between proteins.
(4) Mineral metabolism including (*1*) the role of calcium, phosphorous, iodine, Fe, Cu, Mn, sodium and chlorine in nutrition; (*2*) Acid base balance in food.
(5) Energy metabolism.
(6) Vitamins.
(7) Dietary standards.

Text books recommended—

(1) Chemistry of food and nutrition by Sherman (1935).
(2) The Science of nutrition by Lusk.

N AHMAD, *Registrar.*

Education Department, Bengal.

NOTIFICATION.

Calcutta, the 30th July 1936.

Subject to good conduct and satisfactory progress, the Ram Gopal Sen amalgamated scholarship of the monthly value of Rs. 60 is hereby awarded to Mon Mohan Dey, B.com., for two years, with effect from 1st July 1936. The scholarship will be tenable in Messrs. H. Foulks Lynch & Co., Accountancy Tutors of 16, Coleman Street, London, E.C.2.

J. M. BOTTOMLEY,
Director of Public Instrn., Bengal.

Board of Intermediate and Secondary Education, Dacca.

NOTIFICATIONS.

Ramna, the 3rd August 1936.

No. 5318.—The following students are awarded Junior Scholarships on the results of the High School Examination, 1936, conducted by the Board of Intermediate and Secondary Education, Dacca. The scholarships take effect from the *1st June 1936* and are tenable for two years.

[Principals of colleges are requested to report to the Secretary, Board of Intermediate and Secondary Education, Dacca, the names of scholarship-holders as soon as they are admitted. No scholarship can be drawn until this information is available.]

Two third grade scholarships of Rs. 10 a month each.

1 Bidhubhushan Sen—Nabakumar Institution.
2 Nikhil Chakrabarti—Dacca Collegiate School.

Special scholarships for girls.

One of Rs. 20 a month.

Manashi Chakrabarti—Eden Intermediate College.

One of Rs. 15 a month.

Radharani Ghosh—Eden Intermediate College.

Two of Rs. 10 a month each.

Amita Chaudhuri—Eden Intermediate College.

Jobeda Khatun—Eden Intermediate College.

No. 5324.—Subject to the usual condition of good conduct and satisfactory progress, the Fuller Memorial Scholarship of the value of Rs. 15 a month is awarded to Muhammad Nurul Alam, who passed the High School Examination of the Board in 1936, from the Collegiate School, Dacca, for two years with effect from the *1st June 1936*.

The scholarship is tenable at the Dacca Intermediate College.

Special Junior Scholarship for Muhammadans, 1936.

No. 5329.—The following student is awarded the above scholarship for Muhammadans on the results of the High School Examination, 1936, conducted by the Board of Intermediate and Secondary Education, Dacca. The scholarship takes effect from the *1st June 1936*, and is tenable for two years.

[The Principal of the college to which the scholarship-holder is admitted, is requested to report the fact of his admission to the Secretary, Board of Intermediate and Secondary Education, Dacca. The scholarship cannot be drawn until this information is available.]

One special scholarship of Rs. 10 a month.

Abul Khair Muhammad Mamunur Rashid—Dacca Collegiate School.

Special Junior Scholarships for Muhammadans, 1936.

No. 5333.—The following students are awarded the above scholarships for Muhammadans on the results of the High School Examination, 1936, conducted by the Board of Intermediate and Secondary Education, Dacca. The scholarships take effect from the *1st June 1936*, and are tenable for two years.

[The Head of the institution to which the scholarship-holder is admitted, is requested to report the fact of his admission to the Secretary, Board of Intermediate and Secondary Education, Dacca. No scholarship can be drawn until this information is available.]

Three special scholarships of Rs. 10 a month each.

1 Nurul Huque—St. Gregory's High School.
2 Muhammad Badiuzzaman Khan—Government Moslem High School.
3 Gofranuddin Patwary—Dacca Collegiate School.

J. N. ROY, *Secretary (offg.)*.

Board of Intermediate and Secondary Education, Dacca.

NOTIFICATION No. 5305.

Ramna, the 1st August 1936.

Rules for the admission of non-collegiate students to the Intermediate Examination of the Board in 1937 in Groups A and E.

1. *Bona fide* teachers of recognised English schools or madrasas and inspecting officers of the Education Department, who have been employed as such continuously for at least two academical years (20 calendar months) immediately preceding the dates of examinations, will be admitted to the Intermediate Examination in Groups A and E as non-collegiate students. In case of women candidates exception may be made by special order of the Board.

(Demonstrators, Laboratory Assistants and Librarians of affiliated colleges are regarded as teachers.)

2. Every private candidate must submit his application for admission to the Intermediate Examination on or before the 14th December 1936 in the prescribed form which may be obtained from the office of the Board.

3. The following documents in original must accompany the application:—

(*a*) The University certificate or the certificate granted by the Board of Intermediate and Secondary Education, Dacca, to show that the candidate has passed the next preceding examination.

(*b*) The Admission Card granted by the Board or by the Registrar of the Calcutta University in the case of those who were admitted to the same examination in a previous year.

(*c*) His registration fee receipt (if the name of the candidate has not already been registered, he should pay to the Secretary to the Board the usual registration fee of Rs. 2 to get his name registered).

(*d*) A certificate from the Secretary to the institution, in the case of teachers and from the immediate superior in the case of others, showing that he has been serving continuously for two academical years (20 calendar months).

(*e*) A certificate from a member of the Board or the head of an institution recognised by the Board, that he has been diligently and regularly prosecuting his studies, and that his character and conduct have been good.

4. Every candidate shall state in his application for permission to appear at the Intermediate Examination, the year of his passing the next preceding examination, the division in which he was placed and the following particulars:—

(*a*) Vernacular language for composition.

(*b*) The subjects he will offer at the examination.

5. The Intermediate Examination will be held in the month of March. The dates of the examination will be notified in the *Calcutta Gazette*.

6. The examination will be conducted according to the regulations, courses and syllabuses of the Board as embodied in its calendar 1921-25 which may be had from the office of the Board for Rs. 3-11 including postage.

J. N. ROY, *Secretary (offg.)*.

Board of Intermediate and Secondary Education, Dacca.

Intermediate Examination in Groups A and E.

For non-collegiate students.

(This application must reach the office of the Secretary to the Board of Intermediate and Secondary Education, Dacca, on or before the 14th December.)

APPLICATION.

To

The Secretary, Board of Intermediate and Secondary Education, Dacca.

SIR,

I request permission to present myself at the next Intermediate Examination in Group ..... to be held in 1937, by the Board of Intermediate and Secondary Education, Dacca, as a non-collegiate student.

I am,

Sir,

Yours obediently,

Dated .....

.....

Present address:—

Village .....

Post .....

District.....

N.B.—Candidates should carefully read the "Rules for the admission of non-collegiate students" as incomplete applications will not be considered.

Board of Intermediate and Secondary Education, Dacca.

NOTIFICATION No. 5306.

Ramna, the 1st August 1936.

Rules for the admission of non-collegiate students to the Intermediate Examination of the Board in 1937 in Group "C."

1. *Bona fide* teachers of recognised English schools or madrasas and inspecting officers of the Education Department, who have been employed as such continuously for at least two academical years (20 calendar months) immediately preceding the dates of examination, will be admitted to the Intermediate Examination in Group "C" as non-collegiate students.

A teacher employed in a junior madrasa should be an Arabic or English teacher but a teacher of a middle English school should be an English teacher.

2. Every private candidate must submit his application for admission to the Intermediate Examination on or before the 14th December 1936 in the prescribed form which may be obtained from the office of the Board.

3. The following documents in original must accompany the application:—

(*a*) A certificate to show that the candidate has passed the next preceding examination.

(*b*) The Admission Card granted by the Director of Public Instruction, Bengal, or by the Board of Intermediate and Secondary Education, Dacca, in the case of those who were admitted to the same examination in a previous year.

(*c*) His registration fee receipt (if the name of the candidate has not already been registered he should pay to the Secretary to the Board the usual registration fee of Rs. 2 to get his name registered).

(*d*) A certificate from the Secretary to the institution, in the case of teachers and from the immediate superior in the case of others, showing that he has been serving continuously for two academical years (20 calendar months).

(*e*) A certificate from a member of the Board or the head of an institution recognised by the Board, that he has been diligently and regularly prosecuting his studies, and that his character and conduct have been good.

4. Every candidate shall state in his application for permission to appear at the Intermediate Examination the year of his passing the next preceding examination, the division in which passed and the following particulars:—

(*a*) Vernacular language for composition.

(*b*) The subjects he will offer at the examination.

5. The Intermediate Examination in Group "C" will be held in the month of March. The dates of the examination will be notified in the *Calcutta Gazette*.

6. The examination will be conducted according to the regulations, courses and syllabuses of the Board as embodied in its calendar for 1921-25 which may be had from the office of the Board for Rs. 3-11 including postage.

J. N. ROY, *Secretary (offg.)*.

Board of Intermediate and Secondary Education, Dacca.

Intermediate Examination in Group "C".

For non-collegiate students.

(This application must reach the office of the Secretary to the Board of Intermediate and Secondary Education, Dacca, on or before the 14th December.)

APPLICATION.

To

The Secretary, Board of Intermediate and Secondary Education, Dacca.

SIR,

I request permission to present myself at the next Intermediate Examination in Group "C" to be held in 1937, by the Board of Intermediate and Secondary Education, Dacca, as a non-collegiate student.

I am,

Sir,

Yours obediently,

Dated

... .

Present address:—

Village ....

Post ....

District..... .....

N.B.—Candidates should carefully read the "Rules for the admission of non collegiate students" as incomplete applications will not be considered.

Registered No. C207

The Calcutta Gazette

THURSDAY, AUGUST 20, 1936.

PART II

Advertisements.

Notices

Advertisements, Notices, etc., intended for insertion in this part of the Gazette must be sent to Press before 12 noon on Saturday, and all costs deposited and proofs returned by 4 p.m. on Monday. Manuscripts and postal remittances must be addressed to Superintendent, Government Printing (Publication Branch), Bengal Government Press, Alipore.

For the convenience of advertisers located in Calcutta, arrangements have been made to accept advertisements and prepayment of charges at Sales Office, Ground Floor, Writers' Buildings, Calcutta. The latest time for receipt of advertisements for current week's Gazette has been extended till 4 p.m. on Mondays.

Land Sale Notices.

Notification A.

NOTICE is hereby given, under sections 6 and 13, Act XI of 1859, that the undermentioned estates and shares of estates in the district of Howrah will be put up for sale at the office of the Collector of that district on the 25th September 1936, at 12 noon, for arrears of revenue and other demands which by law are realisable as arrears of land revenue.

When in columns 5, 7 and 9 of the following statement it is stated that only a share is to be sold, it is to be understood that a separate account is kept for that share :—

Touzi No.	Name of mahal and pragana.	Sadar jama of the whole estate.	Whether the whole estate is to be sold.	If only a share is to be sold, specification of such share or shares.	Names of proprietor of property to be sold.	If only a share is to be sold, the Sadar jama of such share.	If the whole estate is to be sold, the arrears due from it.	If only a share is to be sold, the arrears due from it.
1	2	3	4	5	6	7	8	9
		Rs. a. p				Rs. a. p	Rs. a. p.	Rs. a. p.
1/9	Basantapur, pargana Bhursit, police-station Amta.	11,065 7 0	..	1a. 16gds. share of the estate.	Monohor Lal Seal	1,244 14 4	..	165 5 4
4/7	Mandalghat, pargana Bhursit, police-station Shyampore.	2,26,078 8 0	..	2as. 11 gds. 3 kag 4 til share of the estate.	Ditto ..	35,669 0 0	..	12,208 0 0
4/8	Ditto ..	2,23,078 8 0	..	12 gds. 3c. 16 til share of the estate.	Sm. Nikunja Manjuri Dasi.	8,929 9 6	..	3,574 8 7
4/15	Ditto ..	2,23,078 8 0	..	1a. 10 gds. 2c 3 kag 10½ til share of the estate.	Gokul Chandra Pyne as receiver to the estate of Panchanon Mullick.	21,402 2 0	..	6,374 6 10
4/16	Ditto ..	2,23,078 8 0	..	1a. 10gds. 2 c. 3kag 10½ til share of the estate.	Jogendra Nath Mullick.	21,402 1 0	..	2,782 12 0
4/17	Ditto ..	2,23,078 8 0	..	1a. 10gds 2c 3 kag 10½ til share of the estate.	Girimohon Mullick.	21,402 1 0	..	7,537 4 3
4/18	Ditto ..	2,23,078 8 0	..	1a. 10gds 2c. 3 kag 10½ til share of the estate.	Gourmohon Mullick.	21,402 1 3	..	8,006 0 2
5/A	Sherpur, pargana Balia, police-station Amta.	10,383 8 0	..	9 annas share of the estate.	Monohor Lal Seal	5,840 11 3	..	2,393 0 11

The estates are being advertised for sale for instalments of revenue which were due on 30th Jaistha, 1343 B.S., of which the latest date of payment was 28th June 1936.

All other shares besides that specified will be excluded from the sale.

Howrah, the 11th August 1936.

S. C. SINHA, Collector.

Notification A.

NOTICE is hereby given, under sections 6 and 13, Act XI of 1859, that the undermentioned estates and shares of estates in the district of Malda will be put up for sale at the office of the Collector of that district on the 25th September 1936, at 12 noon, for arrears of revenue (and other demands which by law are realisable as arrears of land revenue).

When in columns 5, 7 and 9 of the following statement it is stated that only a share is to be sold, it is to be understood that a separate account is kept for that share :—

Tauzi No	Name of mahal and pargana	Sadar jama of the whole estate	Whether the whole estate is to be sold	If only a share is to be sold, specification of such share or shares.	Names of proprietors of property to be sold	If only a share is to be sold the Sadar jama of such share.	If the whole estate is to be sold, the arrears due from it.	If only a share is to be sold, the arrears due from it.
1	2	3	4	5	6	7	8	9
		Rs a p.				Rs a p	Rs a p	Rs a. p.
42	Mahal Chhatrak, pargana Hathinda	745 10 0	Whole estate.	..	Sarat Chandra Sarkar.	..	54 10 0	..
84	Taraf Hossainpur, pargana Kotwali	2,614 12 0	Do. ..	...	Gossain Rudrananda Giri	..	246 0 0	.
146	Taraf Khane Alampur, pargana Bhatla Gopalpur	11,009 2 2	No ..	146/R. S. 8 annas share of the whole estate.	Kumar Krishna Ghosh	5,534 9 1	..	1,045 3 9
146	Ditto ..	11,009 2 2	No ..	146/1 8 annas share of the whole estate (The above two shares of tauzi No 146 will be sold together)	Niroj Krishna Ghosh and others, through their guardian mother Tarangini Dasi	5,534 9 1	..	1,045 3 9
163	Toke Bhaktipur, Mota-toke mauza Madhal pur, pargana Rukunpur	1,188 14 0	No ..	163/1 8 annas share of the whole estate	Profulla Kumar Banerjee	594 7 0	..	98 15 0
205	Taraf Raghunathpur, and others, pargana Bhatla Gopalpur.	4,405 10 4	No ..	205/13. 6 annas share of mauza Raghunathpur and 13 other mauzas.	Dina Bandhu Singh Jha and others	857 0 0	..	159 1 6
221	Taraf Sadipur, pargana Kotwali	093 8 0	Whole estate	....	Gossain Rudrananda Giri	..	28 0 0	..
581	Mahal Kashimpur, pargana Kashimpur	2,311 15 0	Do. ..	....	Mahammad Hasmat Ali and others.	..	197 12 6	..

The whole estate is advertised for sale for arrears of its separate accounts R. S. and 15 for kists January, March and June 1936 There is also an arrear of Rs 12 in separate account No. 13.

N. B.—In cases where shares of estates are advertised for sale, all other shares than those mentioned in this notification will be excluded from sale.

B. R. SEN, Collector.

Malda, the 12th August 1936.

Notification A.

NOTICE is hereby given, under sections 6 and 13, Act XI of 1859, that the undermentioned estates and shares of estates in the district of Chittagong will be put up for sale at the office of the Collector of that district on the 9th November 1936, at 12 noon, for arrears of revenue (and other demands which by law are realisable as arrears of land revenue) :—

Tauzi No	Name of mahal and pargana	Sadar jama of the whole estate	Whether the whole estate is to be sold	If only a share is to be sold, specification of such share or shares	Names of proprietors of property to be sold.	If only a share is to be sold the Sadar jama of such share	If the whole estate is to be sold, the arrears due from it.	If only a share is to be sold, the arrears due from it.
1	2	3	4	5	6	7	8	9
		Rs. a p				Rs. a p	Rs a. p	Rs a p.
38..	Thana Sitakund and Town, taraf Ahamed-ullah and Nasarullah	729 6 9	Whole		Maulvi Nazir Ahmad Chowdhury and others		170 4 0	
33049	Thana Chakaria, mauza Manikpur, taluk Tufan Ali Munshi	893 4 0	Do		Bibi Hazad Parial and others	..	31 6 6	

These estates are being advertised for sale for instalments of revenue which were due on or before the 31st Jaisthia, 1343 B. S., of which the latest date of payment was 29th June 1936.

H BANERJI, Additional Collector.

Chittagong, the 12th August 1936.

Notification A.

NOTICE is hereby given, under sections 6 and 13, Act XI of 1859, that the undermentioned estates and shares of estates in the district of Khulna will be put up to sale at the office of the Collector of that district on the 24th September 1936, at 12 noon, for the arrears of land revenue.

When in columns 5, 7 and 9 of the following statement it is stated that only a share will be sold, it is to be understood that a separate account is kept for that share :—

Tauzi No.	Name of mahal and pargana.	Annual land revenue of the whole estate.	Whether the whole estate is to be sold.	If only a share is to be sold, specification of such share or shares.	Names of proprietors of property to be sold.	If only a share is to be sold, the Sadar jama of such share.	If the whole estate is to be sold, the arrears due from it.	If only a share is to be sold, the arrears due from it.
1	2	3	4	5	6	7	8	9
		Rs. a. p.				Rs. a. p.	Rs. a. p.	Rs. a. p.
60	Dakatia Char, pargana Selimabad.	998 9 0	Yes ..	....	Mr. K. S. Banerjee, Official Receiver, Hon'ble High Court.	..	1,332 5 0	..
77/2	Dhulliapur, pargana Dhulliapur.	....	No. ..	Separate account No. 2—Share 11 annas.	Dharani Mohan Rai	12,166 15 4	..	5,375 7 5
854	Tildanga, paragana Sunderbans.	4,836 1 8	Yes ..	....	Dhirendra Nath Roy, executor to the estate of late Jogendra Nath Roy.	..	1,536 1 8	..
1027	Maliki Mahal Char Pania, etc., pargana Bajitpur.	574 0 0	Yes ..	....	Hari Mohan Ghose and others.	..	71 13 6	..
963/1	Isofpur Senhati Taraf, pargana Isofpur.	..	No ..	Separate account No. 1—Share 5 as. 17 gds. 1k. 1kr.	Hrishikesh Mittra and others.	930 2 8	..	19 13 9
1327	Murari Mohan, pargana Tala-Khajra.	871 0 5	Yes ..	....	Tarak Nath Mallick, executor to the estate of Banamali Mallick.	..	56 15 11	..
906	Bhuglia, pargana Sunderbans.	1,152 7 0	Yes ..	....	Mohesh Chandra Bhattacharjee.	..	276 7 0	..
998	Uttar Bain Bari, pargana Sunderbans.	0	Yes ..	....	Sarada Charan Basar and others.	..	203 10 0	..
1144	Doara Mahal Char Tentultola Digar, pargana Hogla.	1,047 0 0	Yes ..	....	Monoranjan Ghose and others.	..	58 5 10	..
779	Alladipur, pargana Malai, holding No. 32, khatian No. 74.	506 12 0	Yes ..	....	Bakshu Gazi and others.	..	501 13 6	..
971	Dhanesh Khali, pargana Sunderbans, holding No. 2, khatian No. 3.	815 12 0	Yes ..	....	Keramat Ali Molla and others.	..	357 0 9	..
984	Hatiardanga, pargana Mamudshahi, holding No. 16, khatian No. 70.	817 9 0	Yes ..	....	Sarada Charan Basar and others.	..	466 2 9	..
108/2	Baboila, pargana Buran.	....	No ..	Separate account No. 2—Share 8 annas.	Jatindra Nath Ry Chowdhury and others.	709 3 6	..	393 3 4
979/2	Garkumarpur, pargana Sunderbans.	....	No ..	Separate account No. 3—Share 2 as. 17 gds. 3 k. 7 kr.	Hiran Chandra Ghose	2,022 14 8	..	599 15 7

N. B.—The above estates or shares of estates are being advertised for sale for the instalments of revenue which were due on or before the 21st Jaistha, 1343 B.S. The latest date of payment was the 29th June 1936.

Khulna, the 15th August 1936.

[ILLEGIBLE], *for* Collector.

Notification A.

NOTICE is hereby given, under sections 6 and 13 of Act XI of 1859, that the undermentioned estates and shares of estates in the district of Jessore will be put up to sale at the office of the Collector of that district on the 24th day of September 1936, at 12 noon, for arrears of revenue (and other demands which by law are realizable as arrears of land revenue). These estates are being advertised for sale for instalments of revenue which were due on or before the 31st Jaistha, 1343 B. S., of which the latest day of payment was the 28th day of June 1936.

When in columns 5, 7 and 9 of the following statement it is stated that only a share is to be sold, it is to be understood that a separate account is kept for that share :—

Tauzi No.	Name of mahal and pargana.	Sadar jama of the whole estate.	Whether the whole estate is to be sold	If only a share is to be sold the specification of such share or shares	Names of the proprietors of the property to be sold.	If only a share is to be sold, the Sadar jama of such share.	If the whole estate is to be sold, the arrears due from it.	If only a share is to be sold, the arrears due from it.
1	2	3	4	5	6	7	8	9
		Rs a p.				Rs. a. p.	Rs. a p	Rs. a. p.
71	Zamindari Isofpore Amirabad, pargana Isofpur.	14,993 10 9	Whole	....	Babu Dhirendra Nath Roy, surviving executor to the estate of late Jogendra Nath Roy.	..	19,102 6 6	..
133/0	Kharija Taluk Kachubaria, pargana Naldi	1,373 1 4	No. Share No. 0.*	8 annas ..	Rai Dhirendra Nath Roy Chaudhury.	686 8 8	..	56 12 8
225/0	Kharija Taluk Palua, pargana Sayedpur	1,706 10 8	No. Share No. 0.*	1 anna ..	Sayed Md. Mausud	106 10 8	..	10 8 8
225/1	Ditto ..	1,706 10 8	No Share No. 1 *	7 as. 10 g ..	Ditto ..	800 0 0	..	58 11 0
228	Kharija Taluk Panami, pargana Mahammadshahi.	1,520 1 2	Whole	...	Mr S N Mukherjee, Official Liquidator to the Karatipara Mazumdar Estate & Ltd. in liquidation, and others	..	78 4 10	..
243/1	Kharija Taluk Rasulpur, pargana Isofpur.	29,490 6 0	No. Share No. 1.*	2 as. 14 g. 1 k. 2 cr. 7 til.	Monoranjan Sen, common manager to the estate of Chittaranjan Sen, and others.	5,017 7 5	..	851 9 5
243/2	Ditto ..	29,490 6 0	No. Share No. 2.*	1 a. 11 g. 1 cr. 7 til	Murari Mohan Sen and others.	2,867 2 1	..	200 14 7
243/3	Ditto ..	29,490 6 0	No. Share No. 3.*	1 a. 6 g. 1 k. 10 til	Madan Gopal Sen and others	3,345 0 0	..	229 0 8
243/4	Ditto	29,490 6 0	No Share No. 4.*	18 g. 1 cr. 16 til ..	Gaur Krishna Sen and others.	632 6 8	..	116 15 4
257	Kharija Taluk Shyamnagore, police-station Isofpur.	526 9 0	Whole	....	Naba Krishna Roy	..	32 12 0	..
261/0	Kharija Taluk Saganna Taraf, pargana Mahammadshahi.	1,596 8 9	No. Share No. 0.*	11 annas ..	Nagendra Narayan Roy.	1,097 10 0	..	100 9 11
261/1	Ditto ..	1,596 8 9	No. Share No. 1.*	5 annas ..	Nitya Pada Roy ..	498 14 9	..	45 11 10
4993/0	Kharija Taluk Taraf Ektarpur, pargana Shauzial	4,098 4 2	No. Share No. 0.*	10g. 2 k. 2 cr ..	Umashasi Debi, mother and guardian of Ram Das Roy Chaudhary.	136 9 9	..	12 2 7
4993/2	Ditto .	4,098 4 2	No. Share No. 2.*	8 annas ..	Joy Chand Roy Chaudhary, sebait of Sree Sree Iswar Madan Gopal Jew Thakur and others	2,049 2 1	..	174 4 0
5046/0	Kharija Taluk Chakradihi, pargana Mahammadshahi.	655 10 10	No. Share No. 0.*	13 as 6 g 2 k 2 cr	Malina Debi and others	546 6 4	..	47 2 4
5088/1	Zamindari Joypur, pargana Joypur	7,406 8 7	No. Share No. 1.*	3 as 4 p	Bhola Nath Ganguly and others.	1,481 5 1	..	370 4 0
5110/1	Kharija Taluk Rampur Dihi, pargana Mulghar.	6,040 8 8	No Share No. 1 *	8 annas ..	Shibendra Nath Sinha Roy.	3,020 4 4	..	77 13 1

*All other shares except that specified in column 5 will be excluded from sale.

Tauzi No	Name of mahal and pargana	Sadar jama of the whole estate	Whether the whole estate is to be sold.	If only a share is to be sold, the specification of such share or shares	Names of the proprietors of the property to be sold	If only a share is to be sold the Sadar jama of such share	If the whole estate is to be sold the arrears due from it	If only a share is to be sold the arrears due from it
1	2	3	4	5	6	7	8	9
		Rs a p				Rs a p	Rs a p	Rs a p.
5295/1	Zamindari Ganga dospur pargana Matiary	5,105 3 7	No Share No 1 *	1 a 15 g 1 cr 12 til	Nripendra Nath Mallik and others, A P Sunil Kumar Mitra through Babu Bejoy Gopal Bose, pleader	560 8 3		282 7 3
5295/2	Ditto	5 105 3 7	No Share No 2 *	5 g 1 til	Ram Hari Roy Choudhary, A P Sunil kumar Mitra through Babu Bijoy Gopal Bose pleader.	79 13 9		35 7 6
5295/4	Ditto	5,105 3 7	No Share No. 4 *	1 a 10 g 1 cr 17 til	Purna Chandra Biswas and others	180 11 9	.	194 7 1
5295/8	Ditto	5,10 3 7	No Share No 8 *	1 a 1 cr 2 til	Dina Nath Dey Chaudhury and another, A P Sunil Kumar Mitra through Babu Bejoy Gopal Bose, pleader	320 7 9	.	120 10 0
5295/9	Ditto	5,105 3 7	No Share No 9 *	10 g 1 til	Brojendra Narayan Dey Chaudhury, A P Sunil Kumar Mitra through Babu Bijoy Gopal Bose, pleader	159 9 9	.	64 12 11
5295/13	Ditto	5,105 3 7	No Share No. 13 *	5 gandas	Balai Chand Dey Chaudhury and others, A. P Sunil Kumar Mitra through Babu Bijoy Gopal Bose, pleader	79 12 4	.	33 1 4
5417/1	Zamindari Dihi Ulashi pargana Mulghar	19 467 13 5	No Share No 1.*	3 as 15 g 1 cr 16 til	Gobinda Chandra Mukherjee	4,120 15 11	..	5,098 2 10
5417/2	Ditto	19,467 13 5	No Share No 2 *	8 annas .	Bhupendra Krishna Ghosh	9,733 14 9	.	14,216 4 3
5417/5	Ditto	19 467 13	No Share No 5.*	2 annas .	Sarfaraj Ali Sarafdar and others	2 433 7 -		1,054 1 1
5448/1	Kharija Taluk Dihi Rudrapur, pargana Mulghar	9,233 10 8	No. Share No 1 *	8 annas	Shirendra Nath Sinha Roy.	2,616 13 1	..	65 5 14
5507	Kharija Taluk Bahubar pargana Sheikhazlal	1 111 12 1	Whole	....	Jogmaya Debi ..	..	371 2 4	.

* All other shares except that specified in column 4 will be excluded from sal

[ILLEGIBLE], *for* Collector

Jessore, the 12th August 1936.

Notification A.

NOTICE is hereby given, under sections 6 and 13, Act XI of 1859, that the undermentioned estates and shares of estates in the district of Nadia, will be put up to sale at the office of the Collector of that district on the 25th day of September 1936, at 12 noon, for arrears of revenue (and other demands which by law are realisable as arrears of land revenue).

When in columns 5, 7 and 9 of the following statement it is stated that only a share is to be sold, it is to be understood that a separate account is kept for that share :—

Tauzi No.	Name of mahal and pargana.	Sadar jama of the whole estate.	Whether the whole estate is to be sold or not.	If only a share is to be sold, specification of such share or shares.	Names of proprietors of property to be sold.	If only a share is to be sold, the sadar jama of such share.	If the whole estate is to be sold, the arrears due from it.	If only a share is to be sold, the arrears due from it.
1	2	3	4	5	6	7	8	9
		Rs. a. p.				Rs. a. p.	Rs. a. p.	Rs. a. p.
17	Alfa, pargana Bagwan.	..	No ..	Separate account No. 0.—1 s. 1 c. 1 kr. 11 til.	Jogendra Chandra Bhattacharjee and others.	551 14 9	..	182 5 4
				Separate account No. 21—2 as. 6 g. 3 c. 6 til.	Jyotish Chandra Maitra, Receiver to the estate of Sourendra Nath Khan and others.	1,267 6 0	..	19 7 10
				All other shares besides that specified shall be excluded from the sale.				
40	Kanai Lal, pargana Betai.	..	No ..	Separate account No. 13—1 anna.	Saradindu Sekhar Banerjee.	550 5 5	..	219 4 10
				All other shares besides that specified shall be excluded from the sale.				
110	Chapra, pargana Mamjoani.	1,311 6 5	Whole ..	....	Bhupendra Nath Ganguli and others.	..	463 0 6	..
240	Hari Sankara, pargana Sahauzial.	2,291 15 2	Do. ..	....	Manindra Mohan Acharya and others.	..	60 1 7	..
243	Hati sala, pargana Bagwan.	..	No ..	Separate account No. 0—2 as. 17 g. 3 c. 2 kr. 7 til.	Sarba Ranjan Pal Choudhuri and others.	1,718 0 9	..	281 13 3
				All other shares besides that specified shall be excluded from the sale.				
327	Mrigi Bahadurpur, pargana Rajpur.	698 11 2	Whole	....	Prio Krishna Mazumdar and others.	..	50 11 2	..
370	Nagarbanka, pargana Nagarbanka.	..	No ..	Separate account No. 1—1 c 1 19 til.	Dasi Sundari Dasi.	284 1 0	..	93 12 0
				Separate account No. 2—2 as. 1 g. 3 c.	Surendra Nath Ghosh.	918 6 0	..	317 13 0
				Separate account No. 4—2 as. 1 g. 3 c.	Surendra Nath Ghosh and others.	918 6 0	..	293 4 0
				All other shares besides that specified shall be excluded from the sale.				
467	Sumirdia, pargana Sahauzial.	..	No ..	Separate account No. 0—8 as. 16 g. 3 c. 1 kr. 10 til.	Mozaharali Joardar and others.	614 11 5	..	50 0 7
				All other shares besides that specified shall be excluded from the sale.				
477	Shyampur, pargana Rajpur.	..	No ..	Separate account No. 0—2 as. 3 g. 3 c. 1 kr.	Panchanan Banerjee and others.	500 4 0	..	197 10 4
				All other shares besides that specified will be excluded from the sale.				
488	Sankar Chandra, pargana Sahauzial.	..	No ..	Separate account No. 10—1 s. 6 g. 2 c. 1 kr. 2 til.	Nagendra Nath Banerjee and others.	903 11 1	..	80 5 0
				All other shares besides that specified shall be excluded from the sale.				
834	Mandi Mahal Char Durlavpur, pargana Goash.	597 0 0	Whole	....	Girindra Nath Roy and others.	..	149 0 0	..
840	Char Kadpur, pargana Sahauzial.	..	No ..	Separate account No. 0—8 as. 10 g.	Jogendra Kumar Bhowmik and others.	922 12 6	..	112 4 0
				All other shares besides that specified shall be excluded from the sale.				

Tauzi No.	Name of mahal and pargana.	Sadar jama of the whole estate.	Whether the whole estate is to be sold or not.	If only a share is to be sold, specification of such share or shares.	Names of proprietors of property to be sold.	If only a share is to be sold, the sadar jama of such share.	If the whole estate is to be sold, the arrears due from it.	If only a share is to be sold, the arrears due from it.
1	2	3	4	5	6	7	8	9
		Rs. a. p.				Rs. a. p.	Rs. a. p.	Rs. a. p.
854	Char Jhutladanga, pargana Sahanuial.	1,370 0 0	Whole	....	Gopesh Chandra Mazumdar and another.	..	342 0 0	..
910	Char Gadkhali, pargana Ukhra.	1,342 0 0	Do. ..	....	Hari Pada Mukherjee and another.	..	335 0 0	..
1786	Dighalgram, pargana Ukhra.	3,024 1 7	Do. ..	....	Amulya Kumar Ganguli and another.	..	116 1 7	..
2414	Hatisala, pargana Chakola Krishnagar.	..	No ..	Separate account No. 1—12 as. 16 g. All other shares besides that specified shall be excluded from the sale.	Nagendra Nath Mukherjee and others.	1,644 1 6	..	30 15 6
2645	Char Noapara, pargana Santipur.	3,635 0 0	Whole	....	Ranajit Pal Choudhuri and others.	..	75 13 6	..
2767	Char Ramnagar, pargana Dogachi.	2,125 0 0	Do. ..	....	Akhil Chandra Bose and others.	..	265 8 0	..
2861	Brittihuda, pargana Bagwan.	564 14 10	Do. ..	....	Chandi Prosad Ganguli and others.	..	106 0 0	..
2949	Bil Basulakshmi, pargana Bagwan.	558 8 4	Do. ..	....	Saroj Ranjan Pal Choudhuri and others.	..	49 2 7	..
3526	Char Krishna Chandrapur, pargana Bagwan.	578 0 0	Do. ..	....	Sibendra Nath Singha Roy and others.	..	109 14 7	..
3600	Zamidari Pargana Rajpur, pargana Rajpur.	..	No ..	Separate account No. 1—12 as. 1 g. 1 c. 7 kl. Separate account No. 2—2 as. 16 g. 2 c. 2 kr. All other shares besides that specified shall be excluded from the sale.	Haran Chandra Chakravarty. Bodh Sing Bothra, Manager.	3,793 14 8 890 15 3	.. ..	410 9 2 89 0 0
3740	Char Hatisala, pargana Bagwan.	546 0 0	Whole	....	Bibhuti Bhusan Pal Choudhuri and others.	..	125 6 9	..
3819	Char Pirpur, pargana Islampur.	663 0 0	Do. ..	....	Narendra Narayan Singha and others.	..	82 14 0	..

This notice is issued in respect of instalments of revenue due on or before the 31st Jaistha of 1343 B.S. of which the latest date of payment was 29th June 1936.

P. C. SEN, *for* Collector.

Krishnagar, the 14th August 1936.

Notification A.

NOTICE is hereby given, under sections 6 and 13 of Act XI of 1859 that the undermentioned estates in the district of Mymensingh will be put up for sale at the office of the Collector of that district on 25th September 1936, at 12 noon, for arrears of revenue the instalments of which were due on or before the 31st Jaistha, 1343 B.S., of which the latest day of payment was on 29th June 1936, and the other public demands which by law are realisable as arrears of land revenue.

When in columns 5, 7 and 9 of the following statement it is stated that only a share is to be sold, it is to be understood that a separate account is kept for that share :—

Tauzi No.	Name of mahal and pargana	Sadar jama of the whole estate.	Whether the whole estate is to be sold.	If only a share is to be sold, specification of such share or shares.	Names of proprietors of property to be sold.	If only a share is to be sold, the sadar jama of such share.	If the whole estate is to be sold, the arrears due from it.	If only a share is to be sold, the arrears due from it.
1	2	3	4	5	6	7	8	9
		Rs. a. p.				Rs. a. p.	Rs. a. p.	Rs. a. p.
26 including share by S. A. Nos. 2 and 9.	Joint Zamindary pargana Barabazu.	9,852 5 4	No ..	16 annas share of the estate excluding shares covered by S. A. Nos. 1, 7, 8, 10, 11, 12, 13, 14, 15, 16, 17, 18, 19, 20, 21, 22, 23, 24, 25, and 26 will be sold.	Heramba Chandra Choudhury, Syed Amirulla, Syed Anwarul Hoque, Abdul Mannan and others.	4,782 14 4	..	6,550 11 0

Mymensingh, the 14th August 1936.

[ILLEGIBLE], *for* Collector.

Notification A.

NOTICE is hereby given under sections 6 and 13, Act XI of 1859, that the undermentioned estates and shares of estates in the district of Dacca will be put up for sale at the office of the Collector of that district on the 22nd September 1936, at 11 a.m., for arrears of revenue and other demands which by law are realizable as arrears of land revenue.

When in columns 5, 7 and 9 of the following statement it is stated that only a share is to be sold, it is to be understood that a separate account is kept for that share :—

Touzi No.	Name of mahal and pargana.	Sadar jama of the whole estate.	Whether the whole estate is to be sold.	If only a share is to be sold, specification of such share or shares.	Names of proprietors of property to be sold.	If only a share is to be sold, the sadar jama of such share.	If the whole estate is to be sold, the arrears due from it.	If only a share is to be sold, the arrears due from it.
1	2	3	4	5	6	7	8	9
		Rs. a. p.				Rs. a. p.	Rs. a. p.	Rs. a. p.
205	Zamindari Chandra Narain Bandopadhyaya, pargana Rajnagar.	853 13 3	Whole estate.	....	Digendra Chandra Ray and others.	..	89 6 3	..
221	Taluq Ram Chandra Das, pargana Rajnagar.	1,966 1 8	No ..	S. A. No. 3 consisting of 2 as. 14 gds. 2 kt. 5 til.	Braja Gopal Das Basak, and Ramani Sundari Dasya.	333 2 6	..	377 3 9
				S. A. No. 5 consisting of 5 as. 2 gds. 5 til.	Basanta Kumar Kar Ray, Mohini Mohan Kar Ray, Rai Mohan Kar Ray, Hemendra Mohan Kar Ray, Jitendra Mohan Kar Ray, Dhirendra Mohan Kar Ray, Raj Kumar Banerjee, Nibaran Chandra Banerjee, Niranjan Kumar Banerjee, Girindra Kumar Banerjee, Birendra Kumar Banerjee, Govinda Chandra Ghose, Nanibala Debi, auction purchaser Amulya Ratan Guha.	627 5 6	..	24 6 0
				All other shares besides that specified above will be excluded from the sale, viz., S. A. Nos. 1, 2, 4, 6, 7, 8, 9, 10, 11, 12, 13 and residue share consisting of 8 as. 3 gds. 3 kr. 10 til.				
315	Zamindari Maharaja Nalia Krisna Bahadur, pargana Tappa Habeli Mahammadpur.	1,547 11 9	Whole estate.	....	Hemendra Kumar Sen, Administrator to the estate of Profulla Nalini Debi.	..	836 10 4	..
8429	Dayemi Mahal Char Kala Paharia, pargana Somargaon.	1,037 12 9	No ..	Residue share consisting of 8 annas.	Ramani Sundari Dasya.	518 14 4	..	129 8 0
				All other shares besides that specified above will be excluded from the sale, viz., S. A. No. 1 consisting of 8 annas.				
9013	Dcara Mahal Radha Kanta Ray and others, pargana Sinduri.	1,152 0 0	No ..	S. A. No. 1 consisting of 2 as. 2 gds. 1 kt. 13 til.	Kesab Lal Saha Poddar, Kishori Lal Saha Poddar and Nani Gopal Saha Poddar.	151 11 1	..	29 13 1
				S. A. No. 2 consisting of 9 as. 9 gds. 1 kr.	Munshi Bande Ali Ahammad, Inaddin Ahammad, Maulvi Mumtaz uddin Ahammad and Munshi Kudrat Ali Ahammad.	681 4 10	..	136 0 0
				S. A. No. 4 consisting of 1 a. 1 gds 1 kt. 11 til.	Jamal Khan ..	86 11 10	..	37 6 4
				S. A. No. 6 consisting of 14 gds 10 til.	Radhika Lal Saha Poddar	50 8 9	..	9 6 9
				All other shares besides that specified above will be excluded from the sale, viz., S. A. Nos. 3, 5 and residue share consisting of 2 as. 10 gds. 1 kr. 2 kt. 3 til.				
9762	Meyadi Mahal Char Dilarpur, pargana Bardakhat.	5,935 0 0	Whole estate.	....	Bipin Behari Saha Sardar and others, auction purchaser Chandra Mohan Ghose.	..	1,552 0 0	..
10408	Dayemi Mahal Char Kalim, pargana Sinduri.	1,339 6 7	No ..	S. A. No. 1 consisting of 8 annas only.	Satya Charan Dutta.	669 11 4	..	205 1 4
				All other shares besides that specified above will be excluded from sale, viz., S. A. No. 2 and residue share consisting of 8 annas.				

Touzi No.	Name of mahal and pargana.	Sadar jama of the whole estate.	Whether the whole estate is to be sold.	If only a share is to be sold, specification of such share or shares.	Names of proprietors of property to be sold.	If only a share is to be sold, the sadar jama of such share.	If the whole estate is to be sold, the arrears due from it.	If only a share is to be sold, the arrears due from it.
1	2	3	4	5	6	7	8	9
		Rs. a. p.				Rs. a. p.	Rs. a. p.	Rs. a. p.
11047	Deara Mahal Char Dighaldi, pargana Uttar Sahapur.	639 0 0	Whole estate.	....	Harendra Nath Chakraverty and others.	..	40 0 0	..
15564	Meyadi Mahal Char Kamrangi, pargana Jahangirnagar.	1,597 7 10	No ..	S. A. No. 1 consisting of 8 annas. All other shares besides that specified above will be excluded from the sale, viz., residue share consisting of 8 annas.	Ramani Mohan Barari, settlement holder, Girish Chandra Das, Receiver to the estate of Jatirmayee Debi and others.	798 11 11	..	176 13 11
15642	Deara Mahal Char Sayedpur, pargana Tappa Ran-Bhowal.	692 0 0	Whole estate.	....	Jolekha Khatun, settlement holder, Kartickjan Bibi.	..	252 2 11	..
15862	Lakshmi Kanta Deb Bhowmik Rai Chaudhury, pargana Bardakhat.	858 14 0	Do. ..	....	Lakshmi Kanta Deb Bhowmik Ray Chaudhury and others.		214 10 0	
16032	Meyadi Mahal Char Dilarpur Nasaraddi Sarkar, pargana Bardakhat.	2,723 0 0	Do. ..	....	Syed Ali Hazi and another.	..	2,061 14 3	..
16090	Deara Mahal Kismat Hargaz Birendra Nath Ray Chaudhury, pargana Isakabad.	1,342 0 0	Do. ..	....	Birendra Nath Ray Chaudhury.	..	445 13 7	..
16091	Deara Mahal Kismat Hargaz Panchoo Sarkar, pargana Isakabad.	563 0 0	Do. ..	....	Alimuddin Sarkar	..	94 0 0	..

This notice is issued in respect of instalments of revenue due on or before the 31st Jaistha, 1343 B.S., of which the latest date of payment was the 29th June 1936 (28th being Sunday).

C. H. NICHOLAS, Collector.

Dacca, the 12th August 1936.

Abstract of the Estate Partition Fund of the district of Mymensingh for the year ending the 31st March 1936 prepared as required by section 42, Act V (B.C.) of 1897.

	Rs. a. p.
Balance at credit of the Fund on the 1st April 1935	9,482 0 2
Receipt for the year 1935-36	24,275 14 8
Total	33,757 14 10
Disbursement during the year 1935-36	20,975 9 4
Balance at credit on the 31st March 1936	12,782 5 6

Statement showing the outstanding and the balance to be disbursed in estates and those to be refunded to the proprietors as required under instruction 58 at page 53 of the Batwara Manual, 1927, for the year ending the 31st March 1936 in the district of Mymensingh.

Total balance of partition fees outstanding from the estates under partition in the district of Mymensingh.	Portion of the balance shown, which will have to be disbursed on estates of which partition has not been completed.	Portion of the balance which is to be refunded to the proprietors under section 40 of the Act.
1a	2b	3c
Rs. a. p.	Rs. a. p.	Rs. a. p.
1,76,923 2 5	10,994 5 2	1,788 0 4
	12,782 5 6	

Dacca, the 19th August 1936.

K. G. MURSHED, Collector.

(1665—1)

SALE NOTICE.

In the 2nd Court of the Munsif, Nilphamari, Rangpur.

RENT EXECUTION CASE No. 932 OF 1936.

Value of the case—Rs. 727-6-3.

Sale date—5th September 1936.

Abul Barkat Mahammad Hashem and 3 others of Munshipara, Rangpur, decree-holders,

versus

Azizar Rahman Mia Sardar and 7 others, of Beradanga, police-station Nilphamari, Rangpur, judgment-debtors.

JUDGMENT debtors' dar patni mahal of Rs. 385 and 15 annas annual rental under decree-holders' 4 annas and 11¼ gandas share of patni mahal of Beradanga, appertaining to tauzi No. 265/23 of Rangpur Collectorate, within police-station Nilphamari, district Rangpur.

Estimated price Rs. 727-6-3.
Mauza Beradanga, share 4 as. 11¼ gandas.
Tauzi No. 265, J. L. No. 99.
Judgment-debtors' khatian No. 148 (ka).
Decree-holders' khaitan No. 138.
Road Cess No. 135.

The above property will be sold on 5th September 1936 at 12 noon by the Nazir, Munsif's Court, Nilphamari, Rangpur.

K. K. DAS GUPTA, Munsif.

Nilphamari, the 11th August 1936. (1674—1)

In the Court of the Deputy Collector (3rd Court), Deoghar, Santal Parganas.

RENT SUIT No. 99 OF 1935.

To Srimati Saratsasi Devi.

WHEREAS the Receiver of Rohini estate has instituted a suit against you for arrears of rent for your holding in mauza Bariarbandhi Bompus town, you are directed to appear before this Court on 28th of August 1936 failing which the case will be heard and decided ex parte.

Given under my hand and seal of this Court the 8th June 1936.

S. A. ASHRAF, Deputy Collector.

(1648—2)

In the High Court of Judicature at Fort William in Bengal, in Insolvency.

NOTICE OF ADJUDICATION ORDER.

No. 105 of 1936.

Re Sant Sing, residing at No. 55, Canning Street, in the town of Calcutta, an employee in the shop of Messrs. Kartar & Co., Ltd., of 55, Canning Street, in Calcutta aforesaid, ex parte the debtor.

A. P. Roy & Co., debtor's solicitors.

ON the 8th day of August 1936, an order was made by the High Court of Judicature at Fort William in Bengal in its insolvency jurisdiction adjudging the abovenamed as an insolvent.

Note.—All debts due to the estate should be paid to me.

Dated this 12th day of August 1936.

G. M. FALKNER, Official Assignee.

In the Court of the Sub-Judge at Asansol.

Section 19 of the Provincial Insolvency Act.

INSOLVENCY CASE No. 26 OF 1936.

C. W. A. Higginson, petitioner.

TAKE notice that the petition for insolvency filed by the aforesaid petitioner has been admitted, and that the Court has fixed the 18th September 1936 as the date for the hearing thereof.

K. BANERJI, Sub-Judge.

Asansol, the 10th August 1936.

(1675—1)

In the Court of the Sub-Judge at Asansol.

Section 19 of the Provincial Insolvency Act.

INSOLVENCY CASE No. 27 OF 1936.

Sitesh Chandra Adhikary, petitioner.

TAKE notice that the petition for insolvency filed by the aforesaid petitioner has been admitted, and that the Court has fixed the 18th September 1936 as the date for the hearing thereof.

K. BANERJI, Sub-Judge.

Asansol, the 10th August 1936.

(1676—1)

In the Court of the Sub-Judge at Asansol.

Section 41(1) of the Provincial Insolvency Act.

INSOLVENCY CASE No. 32 OF 1935.

Abdul Rahaman Painter, insolvent.

NOTICE is hereby given that the insolvent has applied for his discharge and the Court has fixed the 4th September 1936 for hearing of the application.

K. BANERJI, Sub-Judge.

Asansol, the 1st August 1936.

(1677—1)

In the Court of the District Judge of Bankura.

INSOLVENCY CASE No. 4 OF 1936.

NOTICE is hereby given under clause (2) of section 19 of the Provincial Insolvency Act, V of 1920, to his creditors that the insolvency petition of Natabar De of Kuchikole Mohonpur, police-station Joypur, district Bankura, has been admitted by this Court as No. 4 of 1936 and that 1st September 1936 has been fixed for hearing thereof.

S. K. GANGULI, District Judge.

Bankura, the 12th August 1936. (1684—1)

NOTICE TO CREDITORS OF THE DATE OF HEARING OF AN INSOLVENCY PETITION.

Section 19 of the Provincial Insolvency Act, V of 1920.

In the Court of the District Judge at Chittagong.

INSOLVENCY APPLICATION No. 26 OF 1936.

WHEREAS creditor Messrs. Laljee Sundarjee, Banker, Sadarghat, Chittagong, has applied to this Court by a petition, dated 20th day of July 1936, to have declared Chanoo Meah Sadagar, son of late Majid Ali Sadagar, of Karankhain, police-station Boalkhali, Chittagong, debtor, an insolvent under the Provincial Insolvency Act, V of 1920, this is to give notice that the Court has fixed the 8th day of September 1936 for the hearing of the aforesaid petition and the examination of the petitioning creditor.

J. GEORGE, *for* District Judge.

Chittagong, the 11th August 1936. (1724—1)

In the 3rd Court of the Sub-Judge at Dacca.

INSOLVENCY CASE No. 47 OF 1936.

Mr. W. Takeda, son of late K. Takeda, resident of No. 12, Ramkrishna Mission Road, police-station Sutrapur, district Dacca, debtor-petitioner.

NOTICE is hereby given for the information of all the creditors that the abovenamed petitioner has applied before this Court for being adjudicated an insolvent. The date of hearing the petition has been fixed on 5th September 1936.

R. C. SEN, Sub-Judge.

Dacca, the 11th August 1936. (1686—1)

In the Court of the District Judge of Hooghly.

INSOLVENCY PETITION No. 18 OF 1936.

NOTICE is hereby given that Benoy Bhusan Manna, son of late Ram Lal Manna, of Serampur, Akna Chowdhuripur Lane, thana Serampur, district Hooghly, was on the 8th day of August 1936 adjudged an insolvent. The 21st day of November 1936 has been fixed for framing a schedule and creditors are required to prove their claims on that day.

[ILLEGIBLE], for District Judge.

Chinsura, the 10th August 1936. (1679—1)

In the Court of the Addl. District Judge of Hooghly at Howrah.

NOTICE is hereby given under the Provincial Insolvency Act, V of 1920, to his creditors that the insolvency petition of Satya Narayan Sha *alias* Babu Lal Sha, son of late Ramtahal Sha, of 24, Sanatan Mistri Lane, thana Golabari, district Howrah, has been admitted by this Court as No. 36 of 1936 and that the 3rd September 1936 has been fixed for the hearing thereof.

S. N. GUHA RAY, Addl. District Judge.

Howrah, the 8th August 1936. (1666—1)

In the Court of the District Judge of Jalpaiguri.

INSOLVENCY CASE No. 8 OF 1936.

GUL MAHAMMAD, son of late Alley Mahammad, of Patkata Baniapara, police-station and district Jalpaiguri, has applied to this Court to be adjudged insolvent. The 9th day of September 1936 has been fixed for examination of the petitioner.

S. C. GHOSE, Registrar.

Jalpaiguri, the 6th August 1936. (1682—1)

ORDER OF ADJUDICATION.

Section 27 of the Provincial Insolvency Act, V of 1920.

In the Court of the District Judge at Midnapore.

INSOLVENCY APPLICATION No. 53 OF 1936.

PURSUANT to a petition, dated 25th May 1936, against N. Kuor Swamy Pille, clerk, Store's Audit, B. N. Railway, Khargpur, district Midnapore, debtor, and on the application of G. Mohan Rao and two others of Kharida, police-station Khargpur, district Midnapore, creditors, and on reading their application and hearing their pleader, it is ordered that the debtor be and the said debtor is hereby adjudged insolvent.

It is further ordered that the debtor do apply for his discharge within one year from this date and that 5th September 1936 has been fixed for proof of debts.

Dated this 25th day of July 1936.

S. K. HALDAR, District Judge.
(1672—1)

NOTICE TO CREDITORS OF THE DATE OF HEARING OF AN INSOLVENCY PETITION.

In the Court of the District Judge of Midnapore.

INSOLVENCY APPLICATION No. 64 OF 1936.

WHEREAS A. Lokkya Naidu and another of New Settlement, police-station Khargpur, district Midnapore, creditors, have applied to this Court by a petition, dated the 8th August 1936, to declare M. Adinarayana, Ticket No. 40480, New Wagon Shop, B. N. Railway Workshop, Khargpur, district Midnapore, debtor, an insolvent under the Provincial Insolvency Act, V of 1920, this is to give the creditors notice that the Court has fixed the 12th day of September 1936 for the hearing of the aforesaid petition.

S. K. HALDAR, District Judge.

Midnapore, the 12th August 1936.
(1673—1)

In the Court of the District Judge of Rajshahi.

INSOLVENCY CASE No. 33 OF 1932.

NOTICE is hereby given that the order passed on 10th September 1932 adjudicating Kedar Nath Shaha, son of late Haralal Shaha, of Shidhakhali, police-station Singra, district Rajshahi, an insolvent, has been annulled by an order, dated 20th April 1934.

[ILLEGIBLE], *for* District Judge.

Rajshahi, the 14th August 1936. (1723—1)

In the Court of the District Judge of Tippera.

INSOLVENCY CASE No. 5 OF 1935.

NOTICE is hereby given to the creditors of Panchananda Pal, son of late Krisna Kumar Pal, of Telikona (Comilla), pargana Meharkul, police-station Kotwali, district Tippera, that the order adjudging the said debtor Panchananda Pal insolvent by an order of this Court, dated the 31st August 1935, is hereby annulled by an order of this Court, dated the 8th August 1936.

R. C. BANARJI, District Judge.

Comilla, the 10th August 1936. (1667—1)

In the Court of the Sub-Judge at Rangpur.

MONEY EXECUTION CASE No. 191 OF 1936.

The Rangpur Swadesh Bhander, Ltd., decree-holder

versus

Jamini Kanta Bhattacharjee, judgment-debtor.

NOTICE is hereby given that the undermentioned property will be sold by the Nazir, Judge's Court, Rangpur, on 4th September 1936:—

5 as. 11 gds. 1 kr. 3 kag interest in zemindary property, bearing tauzi No. 501 of Rangpur Collectorate, within district Rangpur, police-station Mithapukur, pargana Sarhatta, lat Chakdurgapur, mauzas Tilakpura, Hamidpur, Milanpur and Janakipur. Annual land revenue Rs. 292-12-6.

Estimated value Rs. 500.

[ILLEGIBLE], Sub-Judge.

Rangpur, the 12th August 1936. (1685—1)

In the 4th Court of the Sub-Judge of 24-Parganas.

INSOLVENCY CASE No. 288 OF 1936.

Channu Lal Shaw of 117, Cossipore Road, police-station Chitpur, 24-Parganas, applicant.

To Ram Khelaon Mahadeo Sha of 2, Raja Lane, Calcutta, and others, creditors.

ON the 3rd day of August 1936 it was ordered that the matter of the petition of the applicant be heard on the 7th day of September 1936, and that the said applicant do attend to be examined by this Court on that date.

S. P. BOSE, Sub-Judge.

Alipore, the 5th August 1936. (1690—1)

In the 4th Court of the Sub-Judge of 24-Parganas.

INSOLVENCY CASE No. 324 OF 1936.

(1) Hiralal Kalwar, (2) Tulsi Bewa, mother of petitioner No. (1), of 242, Manicktola Main Road, Beliaghata, 24-Parganas, applicants.

To Narsingdas Agarwala of 23, Garanhatta Street, Calcutta, and others, creditors.

ON the 29th day of July 1936 it was ordered that the matter of the petition of the applicants be heard on the 14th day of September 1936, and that the said applicants do attend to be examined by this Court on that date.

S. P. BOSE, Sub-Judge.

Alipore, the 3rd August 1936. (1691—1)

In the 4th Court of the Sub-Judge of 24-Parganas.

INSOLVENCY CASE No. 328 OF 1936.

Md. Abdul Jubber of Juam, police-station Diamond Harbour, 24-Parganas, applicant.

To Damuder Tewari of 3, Tollygunge Circular Road, police-station Tollygunge, 24-Parganas, and others, creditors.

ON the 31st day of July 1936 it was ordered that the matter of the petition of the applicant be heard on the 21st day of September 1936, and that the said applicant do attend to be examined by this Court on that date.

S. P. BOSE, Sub-Judge.

Alipore, the 5th August 1936. (1692—1)

In the 4th Court of the Sub-Judge of 24-Parganas.

INSOLVENCY CASE No. 330 OF 1936.

Mukhendra Kumar Jain of No. 7, Ashutosh Mukherjee Road, police-station Bhowanipur, Calcutta, applicant.

To Protapmall Ranglal, Gangadhar Bagaria of No. 46, Strand Road, Calcutta, and others, creditors.

ON the 5th day of August 1936 it was ordered that the matter of the petition of the applicant be heard on the 21st day of September 1936, and that the said applicant do attend to be examined by this Court on that date.

S. P. BOSE, Sub-Judge.

Alipore, the 7th August 1936. (1693—1)

In the 4th Court of the Sub-Judge of 24-Parganas.

INSOLVENCY CASE No. 332 OF 1936.

Amir Mondal of Jahangirgar, police-station Magrahat, 24-Parganas, applicant.

To Gomar Naskar of Jahangirgar, 24-Parganas, and others, creditors.

ON the 7th day of August 1936 it was ordered that the matter of the petition of the applicant be heard on the 21st day of September 1936, and that the said applicant do attend to be examined by this Court on that date.

S. P. BOSE, Sub-Judge.

Alipore, the 10th August 1936. (1694—1)

In the 4th Court of the Sub-Judge of 24-Parganas.

INSOLVENCY CASE No. 333 OF 1936.

Sheik Mahabub Meah of Titagarh Old Bazar, Titagarh, 24-Parganas, applicant.

To Sarju Prasad Missir of Titagarh, 24-Parganas, and others, creditors.

ON the 31st day of July 1936 it was ordered that the matter of the petition of the applicant be heard on the 14th day of September 1936, and that the said applicant do attend to be examined by this Court on that date.

S. P BOSE, Sub-Judge.

Alipore, the 3rd August 1936. (1695—1)

In the 4th Court of the Sub-Judge of 24-Parganas.

INSOLVENCY CASE No. 334 OF 1936.

Bepin Behari De of 350, Kalighat Road, police-station Bhowanipore, 24-Parganas, applicant

To Kirtibash Bhowmick of 267, Upper Chitpore Road, Calcutta, and others, creditors.

ON the 31st day of July 1936 it was ordered that the matter of the petition of the applicant be heard on the 14th day of September 1936, and that the said applicant do attend to be examined by this Court on that date.

S. P. BOSE, Sub-Judge.

Alipore, the 5th August 1936. (1696—1)

In the 4th Court of the Sub-Judge of 24-Parganas.

INSOLVENCY CASE No. 336 OF 1936.

Ganesh Lall Shaw of 29, Lake Road, police-station Tollygunge, 24-Parganas, applicant.

To Adhar Chandra Rakhit and Sons of 20, Tollygunge Circular Road, police-station Tollygunge, 24-Parganas, and others, creditors.

ON the 3rd day of August 1936 it was ordered that the matter of the petition of the applicant be heard on the 21st day of September 1936, and that the said applicant do attend to be examined by this Court on that date.

S. P. BOSE, Sub-Judge.

Alipore, the 5th August 1936 (1697—1)

In the 4th Court of the Sub-Judge of 24-Parganas.

INSOLVENCY CASE No. 338 OF 1936.

P. A Francis of 6, Sha Aman Lane, Ekbalpore, 24-Parganas, applicant.

To Gosta Behary Sadhukhan of 4/2, Ekbalpore Road, Calcutta, and others, creditors,

ON the 8th day of August 1936 it was ordered that the matter of the petition of the applicant be heard on the 28th day of September 1936, and that the said applicant do attend to be examined by this Court on that date.

S. P BOSE, Sub-Judge

Alipore, the 11th August 1936. (1698—1)

In the 4th Court of the Sub-Judge of 24-Parganas.

INSOLVENCY CASE No. 339 OF 1936.

(1) Badlu Banskore, (2) Puran Banskore, (3) Lallu Banskore, of 12/1, Budge-Budge Road, police-station Ekbalpore, 24-Parganas, applicants.

To Ram Sagore Pandit of 20B Bron Fend Row, Maminpore, 24-Parganas, and others, creditors.

ON the 1st day of August 1936 it was ordered that the matter of the petition of the applicants be heard on the 21st day of September 1936, and that the said applicants do attend to be examined by this Court on that date.

S. P BOSE, Sub-Judge.

Alipore, the 5th August 1936. (1699—1)

In the 4th Court of the Sub-Judge of 24-Parganas.

INSOLVENCY CASE No. 340 OF 1936.

Jangali Chamar of Halisahar Kona, police-station Bijpore, 24-Parganas, applicant.

To Amar Bahadur Nepali of Kanchrapara, 24-Parganas, and others, creditors.

ON the 1st day of August 1936 it was ordered that the matter of the petition of the applicant be heard on the 14th day of September 1936, and that the said applicant do attend to be examined by this Court on that date

S. P. BOSE, Sub-Judge.

Alipore, the 3rd August 1936. (1700—1)

In the 4th Court of the Sub-Judge of 24-Parganas.

INSOLVENCY CASE No. 342 OF 1936

Jhoru Charan Mondal of 97/3, Narikeldanga Main Road, Beliaghata, 24-Parganas, applicant.

To Sheik Paru of 152A, Beliaghata Main Road, Calcutta, and others, creditors.

ON the 1st day of August 1936 it was ordered that the matter of the petition of the applicant be heard on the 14th day of September 1936, and that the said applicant do attend to be examined by this Court on that date.

S. P. BOSE, Sub-Judge.

Alipore, the 3rd August 1936. (1701—1)

In the 4th Court of the Sub-Judge of 24-Parganas.

INSOLVENCY CASE No. 343 OF 1936.

Atulya Kumar Ghosh of No. 18, Digla Road, Gorabazar, police-station Dum Dum, 24-Parganas, applicant.

To Pacha Khan and others of No. 4, Tangra Road, police-station Entally, Calcutta, and others, creditors.

ON the 5th day of August 1936 it was ordered that the matter of the petition of the applicant be heard on the 21st day of September 1936, and that the said applicant do attend to be examined by this Court on that date.

S. P. BOSE, Sub-Judge.

Alipore, the 7th August 1936. (1702—1)

In the 4th Court of the Sub-Judge of 24-Parganas.

INSOLVENCY CASE No. 344 OF 1936.

Amulya Charan Dutt of 114, Ultadanga Main Road, police-station Manicktala, 24-Parganas, applicant.

To Firm Das Datta and Brothers of 24/26, R. G. Kar Road, police-station Shambazar, Calcutta, and others, creditors.

ON the 3rd day of August 1936 it was ordered that the matter of the petition of the applicant be heard on the 21st day of September 1936, and that the said applicant do attend to be examined by this Court on that date.

S. P. BOSE, Sub-Judge.

Alipore, the 5th August 1936. (1703—1)

In the 4th Court of the Sub-Judge of 24-Parganas.

INSOLVENCY CASE No. 345 OF 1936.

Leslie Beech of 38, Jhawtalla Road, police-station Ballygunge, 24-Parganas, applicant.

To Bechu Lall Gupta, Banker of Noomdin Bazar, Asansol, and others, creditors.

ON the 3rd day of August 1936 it was ordered that the matter of the petition of the applicant be heard on the 21st day of September 1936, and that the said applicant do attend to be examined by this Court on that date.

S. P. BOSE, Sub-Judge.

Alipore, the 5th August 1936. (1704—1)

In the 4th Court of the Sub-Judge of 24-Parganas.

INSOLVENCY CASE No. 346 OF 1936.

Mirza Imdad Ali of 12, Gorachand Road, police-station Beniapukur, 24-Parganas, applicant.

To Munshi Kholiral Rahaman of G58, Municipal Market, Calcutta, and others, creditors.

ON the 3rd day of August 1936 it was ordered that the matter of the petition of the applicant be heard on the 21st day of September 1936, and that the said applicant do attend to be examined by this Court on that date.

S. P. BOSE, Sub-Judge.

Alipore, the 5th August 1936. (1705—1)

In the 4th Court of the Sub-Judge of 24-Parganas.

INSOLVENCY CASE No. 350 OF 1936.

Syama Prasanna Mukherjee of No. 70, Kansaripara Road, Bhowanipore, Calcutta, applicant.

To Pratap Chandra Ganguly of 142/1, Chetla Road, Alipore, 24-Parganas, and others, creditors.

ON the 5th day of August 1936 it was ordered that the matter of the petition of the applicant be heard on the 21st day of September 1936, and that the said applicant do attend to be examined by this Court on that date.

S. P. BOSE, Sub-Judge.

Alipore, the 7th August 1936. (1706—1)

In the 4th Court of the Sub-Judge of 24-Parganas.

INSOLVENCY CASE No. 352 OF 1936.

G. H. Patel of 12B, Aheeripukur Road, Ballygunj, 24-Parganas, applicant.

To B. K. Ghosh of 46, Pathuriaghata Street, Calcutta, and others, creditors.

ON the 6th day of August 1936 it was ordered that the matter of the petition of the applicant be heard on the 21st day of September 1936, and that the said applicant do attend to be examined by this Court on that date.

S. P. BOSE, Sub-Judge.

Alipore, the 10th August 1936. (1707—1)

In the 4th Court of the Sub-Judge of 24-Parganas.

INSOLVENCY CASE No. 353 OF 1936.

Raj Rup Behani of 85, Tollygunge Circular Road, police-station Tollygunge, 24-Parganas, applicant.

To Parmananda Chaturbhuj of Darjeeling, and others, creditors.

ON the 6th day of August 1936 it was ordered that the matter of the petition of the applicant be heard on the 21st day of September 1936, and that the said applicant do attend to be examined by this Court on that date.

S. P. BOSE, Sub-Judge.

Alipore, the 10th August 1936. (1708—1)

In the 4th Court of the Sub-Judge of 24-Parganas.

INSOLVENCY CASE No. 354 OF 1936.

Bejoy Krishna Banerjee of 21, Panditia Road, Ballygunj, 24-Parganas, applicant.

To Sanatan Das of Boral Ghat, Nabadwip, district Nadia, and others, creditors.

ON the 7th day of August 1936 it was ordered that the matter of the petition of the applicant be heard on the 21st day of September 1936, and that the said applicant do attend to be examined by this Court on that date.

S. P. BOSE, Sub-Judge.

Alipore, the 10th August 1936. (1709—1)

In the 4th Court of the Sub-Judge of 24-Parganas.

INSOLVENCY CASE No. 355 OF 1936.

Durja Mestar of Clive Jute Mill, Kachha Line, Garden Reach, 24-Parganas, applicant.

To Jagannath Kaiowar, Garden Reach, 24-Parganas, and others, creditors.

ON the 7th day of August 1936 it was ordered that the matter of the petition of the applicant be heard on the 28th day of September 1936, and that the said applicant do attend to be examined by this Court on that date.

S. P. BOSE, Sub-Judge.

Alipore, the 10th August 1936. (1710—1)

In the 4th Court of the Sub-Judge of 24-Parganas.

INSOLVENCY CASE No. 356 OF 1936.

Paritosh Bhattacharjee of 31/4, Ananda Palit Road, Entally, 24-Parganas, applicant.

To Barik Cinema Corporation of 122, Upper Circular Road, Calcutta, creditor.

ON the 7th day of August 1936 it was ordered that the matter of the petition of the applicant be heard on the 21st day of September 1936, and that the said applicant do attend to be examined by this Court on that date.

S. P. BOSE, Sub-Judge.

Alipore, the 10th August 1936. (1711—1)

In the 4th Court of the Sub-Judge of 24-Parganas.

INSOLVENCY CASE No. 357 OF 1936.

Sambhu Charan Das of 23, Mothuranath Chowdhury Street, Baranagore, 24-Parganas, applicant.

To Shamsuddin Khan Kabuli, Hastie Road, Burra Bagan Lane, Alambazar, and others, creditors.

ON the 8th day of August 1936 it was ordered that the matter of the petition of the applicant be heard on the 28th day of September 1936, and that the said applicant do attend to be examined by this Court on that date.

S. P. BOSE, Sub-Judge.

Alipore, the 11th August 1936. (1712—1)

ORDER OF ADJUDICATION.

Section 27 of the Provincial Insolvency Act, V of 1920.

In the 4th Court of the Sub-Judge at Alipore.

INSOLVENCY APPLICATION No. 56 OF 1936.

PURSUANT to a petition, dated 10th February 1936, filed by Abdul Hasan of 194, Linton Street, police-station Beniapuker, 24-Parganas, debtor, and on the application of the debtor himself and on reading his application and hearing his pleader, it is ordered that the debtor be and the said debtor is hereby adjudged insolvent.

It is further ordered that the debtor do apply for his discharge within 30th January 1937.

Dated this 30th day of July 1936.

S. P. BOSE, Sub-Judge.

(1713—1)

ORDER OF ADJUDICATION.

Section 27 of the Provincial Insolvency Act, V of 1920.

In the 4th Court of the Sub-Judge at Alipore.

INSOLVENCY APPLICATION No. 85 OF 1936.

PURSUANT to a petition, dated 20th February 1936, filed by Lokusha Kanu of Alambazar, Baranagore, 24-Parganas, debtor, and on the application of the debtor himself and on reading his application and hearing his pleader, it is ordered that the debtor be and the said debtor is hereby adjudged insolvent.

It is further ordered that the debtor do apply for his discharge within 3rd February 1937.

Dated this 3rd day of August 1936.

S. P. BOSE, Sub-Judge.

(1714—1)

ORDER OF ADJUDICATION.

Section 27 of the Provincial Insolvency Act, V of 1920.

In the 4th Court of the Sub-Judge at Alipore.

INSOLVENCY APPLICATION No. 161 OF 1936.

PURSUANT to a petition, dated 8th April 1936, filed by Gobardhan Dutta of 15, Nakuleswar Bhattacharjee Lane, police-station Sadar Tollygunj, 24-Parganas, debtor, and on the application of the debtor himself and on reading his application and hearing his pleader, it is ordered that the debtor be and the said debtor is hereby adjudged insolvent.

It is further ordered that the debtor do apply for his discharge within 30th January 1937.

Dated this 30th day of July 1936.

S. P. BOSE, Sub-Judge.

(1715—1)

ORDER OF ADJUDICATION.

Section 27 of the Provincial Insolvency Act, V of 1920.

In the 4th Court of the Sub-Judge at Alipore.

INSOLVENCY APPLICATION No. 167 OF 1936.

PURSUANT to a petition, dated 16th April 1936, filed by Jogendra Nath Pramanik of Ramrampore, police-station Diamond Harbour, 24-Parganas, debtor, and on the application of the debtor himself and on reading his application and hearing his pleader, it is ordered that the debtor be and the said debtor is hereby adjudged insolvent.

It is further ordered that the debtor do apply for his discharge within 3rd February 1937.

Dated this 3rd day of August 1936.

S. P. BOSE, Sub-Judge.

(1716—1)

ORDER OF ADJUDICATION.

Section 27 of the Provincial Insolvency Act, V of 1920.

In the 4th Court of the Sub-Judge at Alipore.

INSOLVENCY APPLICATION No. 231 OF 1936.

PURSUANT to a petition, dated 10th May 1936, filed by Shamlal Dhudhuria of 118, Harrison Road, Calcutta, debtor, and on the application of the debtor himself and on reading his application and hearing his pleader, it is ordered that the debtor be and the said debtor is hereby adjudged insolvent.

It is further ordered that the debtor do apply for his discharge within 30th January 1937.

Dated this 30th day of July 1936.

S. P. BOSE, Sub-Judge.

(1717—1)

ORDER OF ADJUDICATION.

Section 27 of the Provincial Insolvency Act, V of 1920.

In the 4th Court of the Sub-Judge at Alipore.

INSOLVENCY APPLICATION No. 244 OF 1936.

PURSUANT to a petition, dated 22nd May 1936, filed by Bhumraj Saroagi of 9, Canal Street, Entally, 24-Parganas, debtor, and on the application of the debtor himself and on reading his application and hearing his pleader, it is ordered that the debtor be and the said debtor is hereby adjudged insolvent.

It is further ordered that the debtor do apply for his discharge within 30th January 1937.

Dated this 30th day of July 1936.

S. P. BOSE, Sub-Judge.

(1718—1)

ORDER OF ADJUDICATION.

Section 27 of the Provincial Insolvency Act, V of 1920.

In the 4th Court of the Sub-Judge at Alipore.

INSOLVENCY APPLICATION No. 254 OF 1936.

PURSUANT to a petition, dated 26th May 1936, filed by Shamsuddin Mallick *alias* S. Mallick of 35, Mominpore Road, police-station Ekbalpore, 24-Parganas, debtor, and on the application of the debtor himself and on reading his application and hearing his pleader, it is ordered that the debtor be and the said debtor is hereby adjudged insolvent.

It is further ordered that the debtor do apply for his discharge within 3rd February 1937.

Dated this 3rd day of August 1936.

S. P. BOSE, Sub-Judge.

(1719—1)

ORDER OF ADJUDICATION.

Section 27 of the Provincial Insolvency Act, V of 1920.

In the 4th Court of the Sub-Judge at Alipore.

INSOLVENCY APPLICATION No. 265 OF 1936.

PURSUANT to a petition, dated 6th June 1936, filed by Puran Bahadur Nepali of Fakirghat Road, Khardah, 24-Parganas, debtor, and on the application of the debtor himself and on reading his application and hearing his pleader, it is ordered that the debtor be and the said debtor is hereby adjudged insolvent.

It is further ordered that the debtor do apply for his discharge within 3rd February 1937.

Dated this 3rd day of August 1936.

S. P. BOSE, Sub-Judge.

(1720—1)

NOTICE TO CREDITORS OF APPLICATION FOR DISCHARGE.

Section 41 (1) of the Provincial Insolvency Act, V of 1920.

In the Court of the District Judge at Alipore.

INSOLVENCY CASE No. 1 OF 1935.

Chaitanaya Chandra Saha of 119, New Circular Road, 24-Parganas, applicant.

TAKE notice that the abovenamed insolvent has applied at the Court for his discharge, and that the Court has fixed the 7th day of September 1936 at 11 o'clock for hearing the application.

Dated this 11th day of August 1936.

T. H. ELLIS, District Judge.

(1678—1)

NOTICE TO CREDITORS OF APPLICATION FOR DISCHARGE.

Section 41 (*1*) of the Provincial Insolvency Act, V of 1920.

In the 4th Court of the Sub-Judge at Alipore.

INSOLVENCY CASE No. 52 of 1936.

A. E. Mercado of 40, Gorachand Road, Entally, 24-Parganas, applicant.

TAKE notice that the abovenamed insolvent has applied at the Court for his discharge, and that the Court has fixed the 21st day of September 1936 at 11 o'clock for hearing the application.

Dated this 7th day of August 1936.

S. P. BOSE, Sub-Judge.

(1687—1)

NOTICE TO CREDITORS OF APPLICATION FOR DISCHARGE.

Section 41 (*1*) of the Provincial Insolvency Act, V of 1920.

In the 4th Court of the Sub-Judge at Alipore.

INSOLVENCY CASE No. 357 OF 1935.

Badrinarayan Prasad of 112 and 113, Diamond Harbour Road, Behala, 24-Parganas, applicant.

TAKE notice that the abovenamed insolvent has applied at the Court for his discharge, and that the Court has fixed the 14th day of September 1936 at 11 o'clock for hearing the application.

Dated this 3rd day of August 1936.

S. P. BOSE, Sub-Judge.

(1688—1)

NOTICE TO CREDITORS OF APPLICATION FOR DISCHARGE.

Section 41 (*1*) of the Provincial Insolvency Act, V of 1920.

In the 4th Court of the Sub-Judge at Alipore.

INSOLVENCY CASE No. 487 OF 1935.

Sheik Abdul Sirdar of Alliance Jute Mill at Jagatdal, 24-Parganas, applicant.

TAKE notice that the abovenamed insolvent has applied at the Court for his discharge, and that the Court has fixed the 21st day of September 1936 at 11 o'clock for hearing the application.

Dated this 10th day of August 1936.

S. P. BOSE, Sub-Judge.

(1689—1)

ORDER ANNULLING ADJUDICATION.

Section 43 of the Provincial Insolvency Act, V of 1920.

In the 4th Court of the Sub-Judge at Alipore.

INSOLVENCY APPLICATION No. 334 OF 1935.

Narendra Nath Mondal, applicant.

WHEREAS Narendra Nath Mondal of Bowali, 24-Parganas, debtor, does not proceed with his application for discharge, it is ordered that the order of adjudication, dated 23rd December 1935, against the debtor be and the same is hereby annulled.

Dated this 2nd day of July 1936.

S. P. BOSE, Sub-Judge.

ORDER ANNULLING ADJUDICATION.

Section 43 of the Provincial Insolvency Act, V of 1920.

In the 4th Court of the Sub-Judge at Alipore.

INSOLVENCY APPLICATION No. 374 OF 1935.

Sk. Mojihar Mondal, applicant.

WHEREAS Sk. Mojihar Mondal of Nawapara, police-station Baranagore, 24-Parganas, debtor, does neither appear nor apply for discharge within the specified time, it is ordered that the order of adjudication, dated 30th January 1936, against the debtor be and the same is hereby annulled.

Dated this 29th day of July 1936.

S. P. BOSE, Sub-Judge.

ORDER ANNULLING ADJUDICATION.

Section 43 of the Provincial Insolvency Act, V of 1920.

In the 4th Court of the Sub-Judge at Alipore.

INSOLVENCY APPLICATION No. 415 OF 1935.

Hira Lal Teli, applicant.

WHEREAS Hira Lal Teli of Gorifa, Baistabpara, Naihaty, 24-Parganas, debtor, does neither appear nor apply for discharge within the specified time, it is ordered that the order of adjudication, dated 3rd February 1936, against the debtor be and the same is hereby annulled.

Dated this 3rd day of August 1936.

S. P. BOSE, Sub-Judge.

ORDER ANNULLING ADJUDICATION.

Section 43 of the Provincial Insolvency Act, V of 1920.

In the 4th Court of the Sub-Judge at Alipore.

INSOLVENCY APPLICATION No. 540 OF 1935.

Pearilal Hallowy, applicant.

WHEREAS Pearilal Hallowy of 243, Halsibagan Lane, police-station Manicktola, 24-Parganas, debtor, does neither appear nor apply for discharge within the specified time, it is ordered that the order of adjudication, dated 3rd February 1936, against the debtor be and the same is hereby annulled.

Dated this 3rd day of August 1936.

S. P. BOSE, Sub-Judge.

MR. SISIR KUMAR BASU, M.A., B.L., intends to enroll as an Advocate of the Calcutta High Court.
(1580—4)

MR. AJAY KUMAR BASU, B.Sc., B.L., intends to be enrolled as an Advocate of the Calcutta High Court.
(1581—4)

MR. BIRESWAR CHATTERJEE, M.Sc., B.L., desires to be enrolled as an Advocate, High Court.
(1592—4)

MR. SUSIL CHANDRA DAS GUPTA, LL.B., desires to be enrolled as an Advocate, High Court, Calcutta.
(1593—4)

MR. SATYENDRA NATH SEN desires to be enrolled as an Advocate, High Court.
(1594—4)

MR. SAURENDRA MOHAN BASU desires to be enrolled as an Advocate, High Court.
(1595—4)

MR. HEMENDRA NATH LAHIRI, M.A., B.L., intends to be enrolled as an Advocate of the High Court.
(1596—4)

MR. TARUN KUMAR DHAR intends to get enrolled as an Advocate, High Court.
(1597—4)

MR. GURUPADA CHAKRAVARTY, B.L., desires to be enrolled as an Advocate, High Court, Calcutta.
(1598—4)

AMARENDRANATH ROY CHOWDHURY, M.A., B.L., desires to be enrolled as an Advocate, High Court.
(1599—4)

MR. POLISETTI MAMILLAIAH, B.A., B.L., desires to be enrolled as an Advocate, High Court.
(1600—4)

MR. CHOWDHURY FAZLUL ALI, M.A., B.L., desires to be enrolled as an Advocate, High Court.
(1601—4)

MR. JNAN KUMAR CHATTERJEE, B.Com., B.L., intends to be enrolled as an Advocate, High Court.
(1602—4)

BHAGAWATI PRASAD KHAITAN, Attorney-at-Law, intends to be enrolled as an Advocate, High Court.
(1603—4)

MR. PROVAT KUMAR SEN GUPTA, M.A., B.L., desires to be enrolled as an Advocate of the High Court.
(1607—4)

MR. MANINDRA KUMAR DEB, B.L., desires to be enrolled as an Advocate of the High Court.
(1608—4)

MR. SUKUMAR GHOSE desires to be enrolled as an Advocate of the High Court, Calcutta.
(1609—4)

MR. PHANINDRA NATH GUPTA, B. L., desires to be enrolled as an Advocate of the High Court.
(1610—4)

MR. PURNENDU KUMAR BATABYAL, M.Sc., B.L., intends to join the High Court as an Advocate.
(1545—4)

AMAL CH. CHATTERJEE, LL.B., Advocate (Punjab), intends to be enrolled as an Advocate, High Court.
(1641—4)

MR. AMARENDRA NATH GUPTA, M.Sc., B.L., intends to be enrolled as an Advocate, High Court.
(1630—4)

MR. BIMAL CHANDRA DAS GUPTA, M.A., B.L., intends to be enrolled as an Advocate, High Court.
(1642—4)

MR. NISHITH RANJAN MUKHOPADHYAY, B.L., intends to be enrolled as an Advocate, High Court.
(1651—4)

MR. SATYA BHUSAN CHAKRABERTTY, M.A., B.L., intends to be enrolled as an Advocate, High Court.
(1657—4)

MR. SUDHIR KUMAR BASU, M.A. B.L., intends to be enrolled as an Advocate, Calcutta High Court.
(1658—4)

KHAN BAHADUR SHARFUDDIN AHMAD, B.L., intends to be enrolled as an Advocate, High Court.
(1663 4)

APPLICATIONS are invited for the post of Civil Medical Officer, Kurseong, district Darjeeling. The pay of the post will be Rs. 300—25—400 with a pony allowance of Rs 20 per month.

The appointment will be for five years in the first instance, renewable, on satisfactory service.

Candidates should possess a medical degree of a recognised Indian University, but preference will be given to one possessing higher British qualifications in Medicine or Surgery. Candidates should be between 30 and 40 years of age and able to ride.

The selected candidate will be on probation for six months. Leave for one month on full pay for every year will be admissible on condition that a *locum tenens* is provided at his own expense.

Canvassing will disqualify. Applications supported by evidence of the qualifications possessed and of age should reach the Surgeon-General with the Government of Bengal, Writers' Buildings, Calcutta, not later than the 9th September 1936.

D. P. GOIL, Major General, I.M.S.,
Surgeon-General with the Govt. of Bengal.

APPLICATIONS are invited for the post of Stenographer and Confidential Clerk to the Deputy Commissioner, Darjeeling, on a pay of Rs. 80—5/2—105—6/2—135—5/2—140 plus hill allowance of 25 per cent. less 10 per cent. cut. Those in Government service prior to 21st July 1931, and who are already working as Stenographers in District Offices, may be allowed to draw the pay of Rs 80—4—140—5—160 plus the usual hill allowance.

Preference will be given to the Stenographers already in Collectorate employ. Applicants must state their age. None need apply who has not passed the Matriculation Examination.

Applications must reach the undersigned by the 21st August 1936.

P. J. GRIFFITHS, Dy. Commr., Darjeeling.

Darjeeling, the 12th August 1936.

Custom House Notice.

NOTICE is hereby given that whereas Messrs. Turnbull Brothers (Merchants), Ltd., have failed to meet the demand made for duty on 29 packages of whisky marked T. B L., *ex s.s* "Jalajyati", and bonded at 1/1, Umakanta Sen Lane, under warehousing bill of entry No. 92 of 5th January 1931, the said goods will be sold by auction on the 31st August 1936 at the sale rooms of Messrs. Mackenzie Lyall & Co., under the provisions of section 119 of the Sea Customs Act.

G. N. BOWER, Collector of Customs.

Custom House, Calcutta, the 14th August 1936.

(1722—2)

WANTED a Sheristadar for the office of the Deputy Commissioner, Jalpaiguri, on a time scale pay of Rs. 200—15—275 (for a new entrant Rs. 155—25/2—200—20/2—220—25/2—245). Applications will be received by the undersigned up to noon on the 30th August 1936. Applicants must have wide experience in the working of the various departments of a district office. State age, educational qualifications and past services.

Canvassing in any form will be considered a disqualification.

R. H HUTCHINGS, Deputy Commissioner

Jalpaiguri, the 15th August 1936.

WANTED a temporary Lecturer in Nyaya for the Government Sanskrit College, Calcutta, on a salary of Rs. 125 per mensem Candidates with high proficiency in both Navya and Prachin Nyaya, teaching experience in Tol, and having published works in Sanskrit, should apply by the 20th August 1936 to the following address. Canvassing is prohibited.

N. K. DUTT, M.A., Ph.D., Principal,
Sanskrit College, Calcutta (offg.).

Calcutta, the 27th July 1936.

THE Bengal and Madras Service Family Pension Fund which is provisionally managed and assisted by Government has for its object the provision of monthly pensions for the maintenance of the widows and children of subscribers and is open, with certain exceptions, to all active and pensioned members of the Uncovenanted service of Government (except those serving under the Government of Bombay), and to Local Fund servants earning pensions from Government. Some of the special features of the fund are (1) that widowed daughters incapable of re-marriage or children labouring under such mental or bodily infirmities as incapacitate them from earning their livelihood or preclude the possibility of marriage (in case of a daughter) are admitted to its benefits; and (2) that subscribers to the Widows and Daughters' branches are entitled to a refund of 30 per cent. of the premia paid, should the nominee predecease them after five years of admission The second quinquennial valuation of the Fund has been completed by the Actuary to the Government of India, and his report discloses very favourable results. For forms of application and rules of the Fund apply to the Account-ant-General, Bengal, Imperial Secretariat Buildings, Calcutta.

NOTICE is hereby given that the partnership firm of Ramlal Sohanlal which used to carry on business at No 26/1, Armenian Street, Calcutta, has been dissolved with effect from Shrabun Sudi 15th S Y. 1993 corresponding with 3rd August 1936, and no one has any authority to enter into any contract or to do any fresh business on behalf of the said firm

KHAITAN & Co, Attorneys for
Ramlal Dosi and Mangalchand Bothra

1B, Old Post Office Street, Calcutta, the 11th August 1936

(1681—1)

NOTICE is hereby given that the partnership business carried on under the name and style of Jamunadas Onkermull at No 180, Harrison Road in Calcutta, between Jamunadas and Onkermull, has been dissolved on and from the 11th August 1936

P D BIMATSINGKA & Co, Attorneys-at-law
and Attorneys for Jamunadas and Onkermull

6, Old Post Office Street, Calcutta, the 11th August 1936 (1683—1)

Custom House Notice.

NOTICE is hereby given that whereas Messrs Turnbull Brothers (Merchants), Ltd, have failed to meet the demand made for duty on 40 packages of brandy marked T B L, *ex* s s. "Norvada", and bonded at 1/1, Umakanta Sen Lane, Malda, under warehousing bill of entry No. $\frac{12}{1}$ of $\frac{\text{3rd March 1931}}{\text{1st April 1931}}$ the said goods will be sold by auction on the 28th August 1936 at the sale rooms of Messrs Mackenzie Lyall & Co., under the provisions of section 119 of the Sea Customs Act

G N BOWER, Collector of Customs

Custom House, Calcutta, the 13th August 1936

(1721—2)

GOVERNMENT OF BENGAL.

Department of Industries.

APPLICATIONS are invited from candidates who are natives of or permanently domiciled in Bengal for the post of the Principal, Bengal Survey School, Mainamati, Tippera The candidates must have received a good general education and must have passed the Survey Final Examination with credit. The candidates must also have had five years' practical training in a responsible post as a Surveyor and three years' teaching experience The post is permanent and pensionable and free unfurnished quarters are provided The selected candidate will be appointed on probation for two years in the scale of Rs 125—25/2—150 —20/2—250—15/2—310—20/2 350 (efficiency bar after 16th stage) and will have to pass the departmental examination in accounts for subordinate officers before confirmation. Applications with copies of certificates and testimonials (which will not be returned) and stating age and present pay (if in service) and occupation should reach the undersigned on or before the 31st August 1936 No interview will be given except by appointment Canvassing by or unsolicited recommendation on behalf of a candidate will render him ineligible for the appointment

A T WESTON,
Director of Industries, Bengal.

40/1-A, Free School Street, Calcutta, the 10th August 1936.

Notice under section 10A of the Court of Wards Act IX (B.C.) of 1879.

WHEREAS under sections 7, 10 and 35 of the Court of Wards Act, IX (B.C.) of 1879, as amended up to date, the Court of Wards has assumed charge of the property of Raja Gopal Lal Ray Bahadur and his son Bhairab Lal Ray of Tajhat, district Rangpur.

Notice is hereby given under section 10A of the said Act that all creditors having claims against the said estate of Raja Gopal Lal Ray Bahadur and his son Bhairab Lal Ray or their immovable property are hereby required to submit the same in writing to the Collector of Rangpur within six months from the date of publication of this notice

Creditors are hereby warned that claims not submitted, as required by this notice, are liable to be deemed to have been duly discharged

H SEN, Wards Deputy Collector.

Rangpur, the 23rd July 1936. (1557—3)

Destroyed Receipts.

TWO Receipts numbered 17934 and 18025, dated 25th July 1936, and granted by the Reserve Bank of India, Public Debt Office, on submission of the undermention ed Government Promissory Notes. Notice of loss has been given to the Reserve Bank of India, Public Debt Office, and the undersigned is about to apply for surrender of the securities :—

Receipt No	G P Note No	Loan.	Amount Rs	Holder's name
17934	381416	3½ per cent, 1865	500	Bibhuti Bhusan Chakravarti
18025	372565-66	3½ per cent, 1900-01	1,000 each.	Ditto

Name of the proprietor—Bibhuti Bhusan Chakravarti.

Residence—Nawpara, P.O Haradham (Nadia).

(1725—1)

In the matter of the Indian Companies Act, 1913, and

In the matter of Carew and Company, Limited.

Notice convening Extraordinary General Meeting.

NOTICE is hereby given that an extraordinary general meeting of Carew and Co., Ltd, will be held at the Registered Office of the Company at No 4, Fairlie Place in the town of Calcutta on the 2nd day of September 1936 at noon when the subjoined resolutions will be proposed as extraordinary resolutions, namely—

1. That pursuant to the provisions of the Indian Companies Act, 1913, and of Article 37 of the Company's Articles of Association, the capital of the Company be increased to Rs 30,00,000 by the creation of 140,000 additional ordinary shares of Rs 10 each ranking for dividend and in all other respects in *pari passu* with the existing ordinary shares in the Company, save only that the same shall not rank for dividend in respect of dividends declared for the year ending 30th June 1936
2. That 40,000 of the said 140,000 shares be forthwith issued and the Directors be instructed to offer the said 40,000 shares in the first instance at a premium of Rs 4 per share to members of the Company whose names appear on the Register of Members as on the 2nd day of September 1936 holding four or more ordinary shares in the proportion of one new share for every four shares held by them respectively, fractions being disregarded, or to the nominee or nominees of any such member and upon the footing that the full amount of each share taken up plus the premium making together Rs 14 per share shall be paid to the Company on acceptance of the offer and that such offer be made by notice specifying the number to which the member is entitled and limiting the time within which the offer if not accepted by payment will be deemed to be declined and that the Directors be empowered to dispose of the shares not taken up in response to such offer by offering them at the same premium to any one or more of the shareholders of the Company including the Directors or otherwise as they consider expedient in the interests of the Company.

By order of the Board of Directors,
LYALL MARSHALL & Co.,
Managing Agents.

Calcutta, the 17th August 1936 (1726—1)

FOREST DEPARTMENT, BENGAL.

Stipendiary Studentship for the Ranger Class at Dehra Dun, 1937-39.

1. THE Government of Bengal intend to select one Muhammadan candidate for deputation to the Rangers' Service Course at the Forest College, Dehra Dun, in April 1937.

2. The candidate must be not less than 18 and not more than 25 years of age on the 1st November 1937, and must have passed the B.A., B.Sc., I.A. or I.Sc. Examination of one of the Indian Universities.

3. Applications should be submitted to the Conservator of Forests, Bengal, 35, Gopalnagore Road, Alipore, by the 15th September 1936.

They should be made in the applicant's own handwriting and sent to the Conservator through the Collector of the district in which the candidate resides or, if he resides in a Forest Division, through the Divisional Forest Officer. They must be accompanied by the following certificates (in original):—

(*a*) A certificate that the candidate is a native of India within the meaning assigned to those words by section 6 of 33 Vict., Chapter 3.

(*b*) A certificate of age.

(*c*) A health certificate in the form prescribed by Article 49 of the Civil Service Regulations, Fifth Edition, signed by the Civil Surgeon of the district and testifying to the candidate's sound constitution, good vision and hearing, and general physical fitness for a rough out-door life in the Forest Department and to the fact that he bears on his body marks of successful vaccination or of small-pox.

(*d*) A certificate of respectability and good moral character from two or more persons whose social or official position can be accepted as a guarantee of reliability.

(The certificates (*c*) and (*d*) must bear date not earlier than the 1st July 1936.)

(If any person giving certificates as above under (*c*) and (*d*) is in a position to mention anything more to the credit of the candidate than the certificates actually called for, he may do so.)

(*e*) A certificate of having passed the B.A., B.Sc., I.A. or I.Sc. Examination of any of the Indian Universities.

(*f*) A certificate that the candidate has a sufficient knowledge of colloquial English to assimilate lectures delivered in that language without the aid of dictation.

4. From the applications received and in respect to which the preceding conditions shall have been tul filled, the Conservator will make a preliminary selection. Every candidate so selected will be required to pass a qualifying examination in the following subjects :—

(1) Dictation of a page of English prose.
(2) An essay to be written on one of several simple subjects.
(3) Mathematics (Arithmetic, Geometry and Algebra). The standard of this paper will be that of Matriculation.

Twenty per cent. of the marks allotted for subjects (1) and (2) will be given for handwriting. Candidates will be required to defray their travelling expenses in connection with this examination which will be held on the 5th and 6th October 1936.

Two candidates will then be selected and will be required to undergo a course of practical training in the forests of North Bengal for a period of 4 months.

5. The Conservator will dispense with the services of any candidate whose work or conduct at any time during his training is unsatisfactory.

6. While undergoing the preliminary training the selected candidates will be granted monthly allowance of Rs. 25.

7. Final selection of a candidate for deputation to the Forest College will be made by the Conservator in accordance with the results of the preliminary training, preference being given to the man who is considered likely to make the best Forest Officer.

8. While at the Forest College the selected candidate will be granted a monthly stipend of Rs. 50. The selected candidate will be obliged to execute the agreement and security bond prescribed by Government.

W. MEIKLEJOHN, Conservator of Forests, Bengal.

Alipore, the 10th August 1936.

In the matter of the Indian Companies Act, 1913

and

In the matter of Adi Dharma Trades Association, Ltd. (in voluntary liquidation).

NOTICE is hereby given that at an extraordinary general meeting of the Association held on 17th June 1936 and in another extraordinary meeting held on the 11th July 1936 confirming the previous resolution as special resolution it was resolved as under:—

"In view of the fact that this Association cannot by reason of its liabilities continue to carry on business it is hereby resolved that this Association be wound up voluntarily and that Mr. S. B. Dandeker of 12, Dalhousie Square, East, be appointed as liquidator for winding up this Association on a remuneration of Rs. 100."

MALI PUNJABI, Chairman.

No. 4 Bridge Tannery, Tiljala, Calcutta, the 10th August 1936. (1668—1)

In the matter of the Indian Companies Act, 1913

and

In the matter of Adi Dharma Trades Association, Ltd. (in voluntary liquidation).

NOTICE is hereby given, pursuant to section 209 of the Indian Companies Act, 1913, that a meeting of the creditors of the abovenamed Company will be held at 18, Parsi Church Street, on 22nd day of August 1936 at 11 a.m.

S. B. DANDEKER, Liquidator.

18, Parsi Church Street, Calcutta, the 11th August 1936. (1671—1)

In the matter of the Indian Companies Act, 1913

and

In the matter of the Barisal Bank, Ltd. (in liquidation).

NOTICE is hereby given that at an extraordinary general meeting of the abovenamed Company duly convened and held at the Registered Office of the Company on the 5th day of August 1936, the following resolution was unanimously passed as an extraordinary resolution:—

"Resolved that it has been proved to the entire satisfaction of this meeting that the Company cannot by reason of its liabilities continue its business and that it is advisable to wind up the same voluntarily and accordingly the Company be wound up and that Babu Bibhuti Bhusan Ganguly, Pleader, Barisal, be hereby appointed liquidator for the purpose of such winding up and that his remuneration be settled on an allowance of 12½ per cent. commission on collection."

BANKIM CH. CHATTERJEE, Director, for and on behalf of the Company.

Barisal, the 8th August 1936. (1669—1)

In the matter of the Indian Companies Act, 1913

and

In the matter of the Barisal Bank, Ltd. (in liquidation).

NOTICE is hereby given that a meeting of the creditors of the Barisal Bank, Ltd., will be held at 4-30 p.m. on Saturday, the 29th August 1936, in the liquidator's office (premises of Babu Bibhuti Bhusan Ganguly, Pleader, Alekanda, Barisal).

BIBHUTI BHUSAN GANGULY, Pleader, Liquidator.

Barisal, the 8th August 1936. (1670—1)

Imperial Library.

Secretariat Buildings, 6, Esplanade East, Calcutta,

Open on—

Week days and Saturdays from 10 a.m. to 7 p.m.
Sundays and Gazetted holidays from 2 p.m. to 5 p.m.

THE Imperial Library is also a Lending Library. It is free to all except children. There is no subscription to pay.

K. M. ASADULLAH, Librarian.

Registered No. C207

No. 34 of 1936

The Calcutta Gazette

THURSDAY, AUGUST 20, 1936

CONTENTS:

	Page
Statement under the Cotton Ginning and Pressing Factories Act 1925 ..	1123
List of Properties and Abstract Account of Securities held under Act VI of 1890 on the 31st March 1936 .. .	1124—1151
Statement of weekly gauge readings on the river Ganges at Rampur Boalia ..	1152
First Forecast of the Cotton Crops of Bengal 1936-37	1153
Monthly Weather and Crop Report of Bengal for July 1936	1154
Weather and Crop Report for the week ending 12th August 1936 .. .	1155—1158

SUPPLEMENT.

Official Papers.

FORM C—BENGAL.

STATEMENT OF COTTON PRESSED IN THE BENGAL PRESIDENCY FOR THE WEEK ENDING THE 7th AUGUST 1936.

[Section 5 (2) of the Cotton Ginning and Pressing Factories Act, 1925.]

Name of Division or block.	Number of bales pressed.				District included in the block.
	During the week.	During the corresponding week last year.	Since 1st September 1935 (the date prescribed by the Local Government as the commencement of the season).	During the corresponding period last year.	
The Bengal Presidency	975 bales of 400 lbs. each.	1,364	65,334	40,221	All districts in the Presidency.

J. B. McBRIDE,

Chief Inspector of Factories, Bengal.

LIST OF PROPERTIES AND ABSTRACT ACCOUNT OF SECURITIES HELD UNDER ACT VI OF 1890 ON THE 31st MARCH 1936.

The following list of properties and abstract account of securities are, as prescribed in section 9 of the Charitable Endowments Act VI of 1890, published for general information :—

PART I.—List of Properties other than Securities held under Act VI of 1890 on the 31st March 1936.

Serial No.	Particulars of vesting order.		Name of Endowment.	Administrator of property.	Property held.			Remarks.
	No.	Date.			Description.	Value.	Annual income, if known.	
1	2	3	4	5	6	7	8	9
						Rs. A. P.	Rs. A. P.	
1	Government of Bengal notification No. 2620Medl.	26th August 1901.	Syedani Tahirunnessa Bibi Chaudhurani Female Hospital at Bogra and the Bogra Public Library.*	Collector of Bogra ..	Shares in landed properties in the district of Bogra specified in Parts I and II of the First Schedule of the vesting order.	Nil	1,140 0 0	
2	Ditto No. 3112Medl.	31st July 1895	Howrah General Hospital ..	Civil Surgeon of Howrah as Superintendent, under the supervision, management and control of a committee of twenty persons.	The lands, hereditaments, buildings and premises, forming and known as the Howrah General Hospital as specified in the First Schedule of the vesting order published at pages 762 and 763 of Part I of the *Calcutta Gazette*, dated the 7th August 1895.	6,26,910 0 0	Nil	
3	Ditto No. 1000F.	8th February 1897.	Rao Mahes Narayan Roy Serai Fund	A committee consisting of seven members.	All that messuage, tenement, situate at Raghunathganj, subdivision Jangipur, Murshidabad, with the piece of land containing an area of 4 bighas 9 cottahs and 8 chittacks.	4,200 0 0	6 0 0	Sale-proceeds of mangoes (1934-35).
4	Ditto No. 3009Medl.	10th May 1898	Lady Mackenzie Setabganj Charitable Dispensary.	A committee of three persons having for its President the Magistrate of Dinajpur.	Zamindari right to the Hât Setabganj, also called Hât Budeshury, situated within Lat Behogaon, tauzi No. 109 in the Dinajpur Collectorate.	11,240 0 0	624 0 0	
5	Ditto No. 5320M.	5th December 1899.	Rao Jogendra Narain Ray's Mackenzie Tank, Park and Hall Fund.	A committee of eight members with the Subdivisional Officer of Jangipur as President.	The messuage, premises and tank situate at Raghunathganj, in the subdivision of Jangipur, in the district of Murshidabad, with the piece or parcel of land on part whereof the same is erected and built and the said tank is dug, containing an area of 20 bighas.	10,525 0 0	Nil	
6	Ditto No. 184T.M.	25th April 1902	Prince Albert Victor Asylum for Lepers.	Commissioner of the Presidency Division, *ex-officio* Chairman of the Board of Management.	All that piece or parcel of land with the tanks and buildings thereon situate at and numbered 18, 19, 20, 21, Gobra Road, South, in the town of Calcutta, and Railway B class land, containing an area of 28 bighas 5 cottahs 13 chittacks and 31 square feet, as detailed in the vesting order.	1,34,097 0 0	Nil	

7	Ditto Nos. 2486, 3884 and 390Edn.	16th July 1901, 22nd December 1902 and 5th February 1923.	The Ram Narayan Basu English School Fund.	Trustees of the Fund, consisting of eight persons.	(1) All that piece or parcel of land with one-storeyed brick-built building in the village of Maju, zilla Hooghly, containing an area of 4 bighas and 10 cottahs. (2) All that piece or parcel of land in the village of Maju, containing an area of 15 cottahs. (3) All that piece or parcel of lakhiraj land situate in the village of Maju, in the zilla of Howrah, containing an area measuring ·97 acre corresponding to 2 bighas 19 cottahs and 1 chittack of standard measurement, as detailed in the vesting order.	10,000 0 0 40 0 0 Nil	15 0 0 2 0 0 Nil	
8	Ditto No. 3520.	2nd December 1902.	The Kashi Kishore Technical School Fund.	Chairman, District Board, Mymensingh.	All that piece or parcel of land situate at Mymensingh, containing an area of 6 bighas 6 cottahs and 3½ chittacks, as detailed in the vesting order.	3,559 0 5	102 9 7	
9	Ditto No. 1774Medl.	25th July 1906	Alms-House and Midnapore Charitable Dispensary.	Collector of Midnapore ..	The revenue-free estate Nazarganj (including Bag Nazarganj and Kangalganj in pargana Midnapore).	19,720 0 0	610 9 8	Balance at the end of 1934-35.
10	Ditto Nos. 3512 and 811Edn.	31st August 1908 and 31st March 1920.	The St. Paul's School Darjeeling Fund.	Governors, St. Paul's School	All that piece or parcel of land or estate now known as St. Paul's School, Darjeeling, containing by admeasurement 41 acres 3 roods and 19 poles, as detailed in the vesting order.	1,89,742 0 0	Nil	
11	Ditto No. 17.	3rd January 1910.	The Hira Lal Mukherji Tol Fund ..	Principal, Sanskrit College, Calcutta.	All that piece or parcel of rent-free land, containing by estimation about 10 cottahs, in the village of Sridharpore, in the district of Burdwan, together with the pucca building, a thatched cook-house standing thereon, a pucca wall surrounding the said land, and a well sunk therein, as detailed in the vesting order.	2,000 0 0	Nil	
12	Ditto No. 228T.—Medl.	11th May 1910	The Manik Chandra Das Charitable Dispensary Trust Fund	A committee of eleven members with the Subdivisional Officer of Ranaghat in the district of Nadia as *ex-officio* President and the donor, and, after his death, his eldest male heir as Vice-President.	All that piece or parcel of land situate at Sutragarh in thana Santipur, in the subdivision of Ranaghat, in the district of Nadia, containing by admeasurement 7 cottahs, more or less, together with the brick-built one-storeyed building containing four side-rooms, one hall and two verandahs, as detailed in the First Schedule of the vesting order.	Building— 700 0 0 Land— 150 0 0	Nil	

	Rs.
*Rent credited in Bogra Treasury during 1935-36 for the kists ending March 1936	1,140
Balance of previous year	570
Total cash receipts	1,710
Payments to the Administrator	1,425
Balance in cash	285

Serial No.	Particulars of vesting order.		Name of Endowment.	Administrator of property.	Property held.			Remarks.
	No.	Date.			Description.	Value.	Annual income, if known.	
1	2	3	4	5	6	7	8	9
						Rs. A. P.	Rs. A. P.	
13	Government of Bengal notification Nos. 1631Medl. and 818 Medl.	14th November 1910 and 15th March 1923.	The Burdwan Fraser Hospital ..	A committee of twelve members with the Civil Surgeon of Burdwan as Secretary of the Committee and Superintendent of the hospital.	(1) Lands with buildings already existing— Revenue-free lands of the Burdwan Raj, comprising an area of 1 bigha 8 cottahs and 3¼ chittacks and bounded as detailed in the vesting order, together with the Shyamsayar Raj Charitable Dispensary and other buildings, etc., described in the notification. (2) Lands upon which buildings have been erected— Unoccupied revenue-free land of the Burdwan Raj, comprising 27 bighas 8 cottahs and 5 chittacks and bounded as detailed in the vesting order. List of trees standing within the compound is annexed in Appendix I of the notification.	1,14,503 6 5	(a) 62 0 0	(a) From tank from 1-5-1934.
14	Ditto No. 5443Medl.	17th November 1914.	Raja Rao Jogendra Narain Ray Bahadur Female Hospital Fund.	Dispensary Committee, Berhampore Hospital.	All that piece or parcel of land situate in khas mahal Gurh Berhampore, bearing tauzi No. 579, containing 1 bigha of land, together with buildings and erections thereon.	20,000 0 0	Nil	
15	Ditto No. 21Medl.	5th January 1916.	The Nafar Chandra Kolay Charitable Dispensary Trust Fund.	A committee of five members for the management of this dispensary.	All that piece or parcel of land situate at Deopara in thana Kotulpur, in subdivision Vishnupur, Bankura, containing an area of 1 bigha and 10 cottahs, together with the kutcha building erected thereon.	Nil	Nil	
16	Ditto No. 1619Edn.	11th December 1916.	Debiprasad Agarwalla School Fund	A committee of nine persons with the Magistrate of the 24-Parganas as President.	Four houses, a garden and half share of a bungalow, as detailed in Part I of First Schedule of the vesting order.	Nil	(a) 90 0 0	(a) Actual income during 1935-36.

17	Ditto No. 186Medl.	16th January 1919.	The Chittagong General Hospital Charitable Endowment.	A committee consisting of eight *ex-officio* and 15 non-official members.	The lands, hereditaments, buildings and premises forming and known as the Chittagong General Hospital, as detailed in the First Schedule of the vesting order.	Building— 1,56,132 0 0 Land— 20,000 0 0 Trees— 379 0 0	Nil
18	Ditto No. 1074Medl.	4th April 1919	The Gopi Mohan Roy Charitable Dispensary Fund	A committee consisting of five *ex-officio* and four non-official members with the Collector of Dacca as President.	A plot of land containing an area of 1 acre 2 roods and 38 poles (or 5 bighas 5 cottahs and 6 chittacks more or less) situated in the village of Serajdikhan, sub-district Munshiganj, district Dacca, with buildings thereon and a tank attached to the dispensary, as detailed in the vesting order.	Building— 6,000 0 0 Land— 2,626 0 0	Nil
19	Ditto No. 1620Edn.	1st November 1919.	Rao Mohes Narayan Roy Fund ..	A committee of two *ex-officio* and six non-official members with the District Magistrate of Murshidabad as President and Subdivisional Officer, Lalbagh subdivision, as Secretary.	A—Two plots of land in mauza Srimantapur, pargana Islampur, thana Lalgola, bearing tauzi No. 432 of Murshidabad Collectorate— (1) 5 bighas 9 cottahs and 13 chittacks, containing the school premises. (2) 5 bighas 11 cottahs and 4 chittacks, containing the hostel building and a tank, as detailed in the vesting order. B—The furniture, fittings and equipment of the High English School, particulars being set forth in a list supplied to Government by the donor.	549 1 0 556 4 0	Nil Nil
20	Ditto No. 1014Edn.	4th May 1922	The Ramnagore Atul Bidyalaya Charitable Endowment.	A committee consisting of four *ex-officio* and six non-official members with the District Magistrate of Hooghly as President.	(1) A rectangular plot of rent-free land of an area of about 10 cottahs in mauza Ramnagore, police-station Khanakul, containing the school premises. (2) Buildings—two pucca masonry one-storeyed blocks for school purposes, as detailed in the vesting order. (3) The furniture, fittings, equipment of the said school, including books in the school library.	49 0 0 (as per deed of sale).	Nil

Serial No.	Particulars of vesting order.		Name of Endowment.	Administrator of property.	Property held.			Remarks.
	No.	Date.			Description.	Value.	Annual income, if known.	
1	2	3	4	5	6	7	8	9
						Rs. A. P.	Rs. A. P.	
21	Government of Bengal notification No. 2176Medl.	18th August 1922.	The Madhu Sudan Bose's Charitable Dispensary Fund.	Trustees, District Magistrate, Howrah, being the President of the Trustees.	All that piece or parcel of rent-free land measuring about 8 cottahs, as detailed in the vesting order.	Land— 100 0 0 Buildings— 2,100 0 0	Nil	
22	Ditto No. 1590Edn.	2nd August 1922.	The Rakhal Chandra Pal Fund ...	A committee of seven members, the Collector of Hooghly, for the time being, being the President.	All that piece or parcel of land comprising an area of 3 cottahs, more or less, situate in the village of Maria near Akna in the district of Hooghly (as detailed in the notification), together with all rights, easements and appurtenances thereunto belonging or usually held and enjoyed therewith, together also with school buildings erected on part of the said land and consisting of— (1) Two one-storeyed buildings with covered verandahs with a platform in front. (2) One kitchen in corner of yard, together also with all fittings, furniture and effects now used in or belonging to the Chatuspathi or school carried on in the said premises.	Land and buildings— 250 0 0 (about)	Nil	
23	Ditto No. 2484Mis.	4th December 1922.	The Ramendra Sundar Panthanibas Fund.	A committee consisting of five *ex-officio* members and four non-official members, the Subdivisional Officer of Kandi, for the time being, being the President.	Lands, buildings and appurtenances, comprising two rest-houses— (*a*) Lands and tank—area (including tank) 2 bighas 5 cottahs and 13 chittacks, as detailed in the vesting order. (*b*) Buildings—two buildings each containing a hall and a room with a verandah in front of them and with a staircase in front of the verandah. (*c*) Appurtenances—eight *chaukis* (bedsteads) in all, four for each building.	Land— 473 0 0	Nil	

24	Ditto No. 1479Edn.	23rd April 1928	The Uday Chand Free M. E. Institution Fund.	A committee of Trustees, the Chairman of the District Board of Hooghly being the President.	All that piece or parcel of land situate in the village of Guti, police-station Jangipara, in the district of Hooghly, and subdivision Serampore, containing an area of one bigha or thereabouts of standard measurement (as detailed in the notification), and also all that two-storeyed brick-built building standing and being on the eastern portion of the said land and used as the school house of the Uday Chand Free M. E. Institution.	Nil	Nil
25	Ditto No. 1842Edn. (Part D of the Second Schedule).	22nd November 1919.	The Sussex Trust Fund ..	Director of Public Instruction, Bengal.	All that piece or parcel of revenue-free surplus land situate, lying at and being on Mohan Chand Road, Kidderpore, within thana Watganj, Registration District Alipur in the district of 24-Parganas, pargana Magura, containing by admeasurement 10 cottahs 15 chittacks 1 sq. ft. more or less (as detailed in the indenture).	27,815 15 7	Nil
26	Ditto No. 1760Edn.	4th July 1931	The Satyendra Prasanna Baron Sinha Memorial Endowment.	District Magistrate, Birbhum.	(1) All that plot of rent-free land situated in mauza Raipur, thana and chowki Bolpur, Sub-Registration Office Bolpur, in the district of Birbhum, and recorded as plot No. 1085 in khatian No. 432 in the survey and settlement records prepared under the authority of the Government of Bengal in 1925-29, with all structures and buildings constructed thereon and tank and well included therein (as detailed in the notification), used for and known as Raipur Sitikantha Memorial School. (2) All those two plots of rent-free lands situated in mauza Raipur, thana and chowki Bolpur, Sub-Registration Office Bolpur, in the district of Birbhum, and recorded as plots Nos. 1263 and 1264, khatian No. 430 in the survey and settlement records prepared under the authority of the Government of Bengal in 1925-29, with all structures and buildings constructed thereon (as detailed in the notification), used for and known as Raipur Monmohini Charitable Dispensary.	Nil	Nil

CALCUTTA,
The 15th July 1936.

G. W. GLASS,
Deputy Accountant-General, Bengal,
for *Treasurer, Charitable Endowments, Bengal.*

PART II.—List and Abstract Account of securities

Case No.	Name of Endowment.	Person on whose behalf held.	Particulars of Securities.			Cash	
			Government Promissory Notes.	Other kinds.	Total.	Interest or dividend realized.	Other cash: Balance of previous year.
1	2	3	4	5	6	7	8
			Rs.	Rs.	Rs.	Rs. A. P.	Rs. A P.
1	Maharajmata Sibu Sundari Dabi's Hindu Widows' Fund.	Trustees appointed under Bengal Government notification No. 1538F., dated the 7th March 1898.	1,00,000	....	1,00,000	3,491 4 0	....
2	The Elliot Prize for Scientific Research.	Trustees appointed under Bengal Government notification No. 5058F., dated 21st December 1892.	6,000	....	6,000	209 8 0	3,246 6 8
3	The Sreemutty Brahmmamoyi's Hindu Orphans' Fund.	Trustees appointed under Bengal Government notification No. 3552F., dated the 24th July 1893.	25,000	....	25,000	872 14 0	....
4	The Albert Victor Asylum for Lepers (Maintenance Fund).	Commissioner of the Presidency Division, *ex-officio* Chairman of the Board of Management.	(b)	....	....	715 12 0	....
5	The Hira Lal Mukerji Tol Fund.	Principal, Sanskrit College.	20,000	....	20,000	662 4 8	....
6	The Shibani Fund	A committee consisting of not less than five and not more than nine members.	6,000	....	6,000	209 8 0	....
7	The Iswar Chandra Charitable Dispensary at Amragori, Howrah.	Ditto ..	19,000	....	19,000	629 14 0	....
8	The Walter Thompson Female Scholarship Fund.	Superintendent, Campbell Medical School.	9,500	....	9,500	331 10 0	2,950 0 6
9	The Belgoria Charitable Dispensary.	Magistrate of Nadia	28,000	....	28,000	977 8 0	....
10	Babu Ram Lall Mukherji's Fund.	Secretary, Government of Bengal, Revenue Department.	50,000	....	50,000	1,745 10 0	....
11	Dr. Bholanath Bose's Trust Estate.	Chairman, District Board, 24-Parganas.	1,61,400	....	1,61,400	5,610 0 0	....
12	Kamini Moyee Dasi Ward Endowment.	Secretary to the Committee for the Management of the North Suburban Hospital, Cossipore.	9,500	....	9,500	331 10 0	....
		Carried over ..	4,34,400	....	4,34,400	15,787 6 8	6,196 7 2

(a) Credited to
(b) Rs. 20,500 returned to the Commissioner.
*Rs. 2,950-0-6 included in the sum of Rs. 3,047-8-6
(c) Credit to Government under XXII

held under Act VI of 1890 on the 31st March 1936.

Receipts.			Cash Expenditure.					
receipts.				Other payments.				
Balance left after investment.	Donations.	Total cash receipts.	Renewal fees.	Remitted to the Manager, Reserve Bank of India, Calcutta, for investment.	Payments to the administrators.	Total paid.	Balance in cash.	Remarks.
9	10	11	12	13	14	15	16	17
Rs. A. P.	Rs. A. P.	Rs. A. P.	Rs. A. P.	Rs. A. P.	Rs. A. P.	Rs. A. P.	Rs. A. P.	
....	....	3,491 4 0	....	....	3,491 4 0	3,491 4 0	Nil	
....	....	3,455 14 8	....	....	420 0 0	420 0 0	3,035 14 8	
....	....	872 14 0	....	....	872 14 0	872 14 0	Nil	
....	....	715 12 0	....	....	715 12 0 (a)	715 12 0	Nil	
....	....	662 4 8	....	....	662 4 8	662 4 8	Nil	
....	....	209 8 0	....	....	209 8 0	209 8 0	Nil	
....	....	629 14 0	....	....	629 14 0	629 14 0	Nil	
....	....	3,281 10 6	....	....	3,047 8 6	3,047 8 6	234 2 0	
....	....	977 8 0	....	....	977 8 0	977 8 0	Nil	
....	....	1,745 10 0	....	....	1,745 10 0 (a)	1,745 10 0	Nil	
....	....	5,610 0 0	....	....	5,610 0 0	5,610 0 0	Nil	
....	....	331 10 0	....	....	331 10 0	331 10 0	Nil	
....	....	21,083 13 10	....	....	18,713 13 2	18,713 13 2	3,270 0 8	

a Local Fund
Presidency Division.
remitted to Administrator for further investment.
Medical.—Income from endowments.

PART II.—List and Abstract Account of securities

Case No.	Name of Endowment.	Person on whose behalf held	Particulars of Securities.			Cash	
			Government Promissory Notes.	Other kinds.	Total.	Interest or dividend realized.	Other cash: Balance of previous year.
1	2	3	4	5	6	7	8
			Rs.	Rs.	Rs.	Rs. A. P.	Rs. A. P.
		Brought forward ..	4,34,400	....	4,34,400	15,787 6 8	6,196 7 2
13	The Hara Kumar Tagore Tol Stipends.	Principal, Sanskrit College.	17,700	....	17,700	617 15 8	....
14	The DeSouza Charitable Fund.	District Charitable Society, Calcutta.	2,47,300	....	2,47,300	8,633 14 0	....
15	The Barton Fund ..	Magistrate, Jessore	4,600	....	4,600	160 10 0	....
16	The Mainaguri Charitable Dispensary Fund.	Deputy Commissioner, Jalpaiguri.	3,000	....	3,000	104 12 0	....
17	Rao Mohesh Narayan Roy Serai Fund.	A committee of seven members with the Subdivisional Officer, Jangipur, Murshidabad, as President.	3,000	....	3,000	104 12 0	....
18	Krishna Chandra Sarkar Scholarship Fund.	Collector, Rajshahi	11,800	....	11,800	412 0 0	879 5 4
19	Krishna Kamini Chaudhurani Scholarship and Medal Fund.	Magistrate, Pabna	6,800	....	6,800	232 5 9	....
20	The Mohini Mohan Roy Permanent Charitable Relief Fund.	Collector, 24-Parganas.	1,08,000	....	1,08,000	3,327 10 4	39 0 0
21	The Beni Madhab Fund.	Magistrate, Birbhum.	4,000	....	4,000	139 10 0	....
22	Dr. Chandra's Scholarship Fund.	Principal, Medical College, Calcutta.	24,100	....	24,100	841 6 0	....
23	Rao Jogendra Narain Rai's Mackenzie Tank, Park and Hall Fund.	A committee of eight members with the Subdivisional Officer of Jangipur as President.	3,000	....	3,000	104 12 0	....
24	The Hari Charan Fund.	Magistrate, Khulna	5,100	....	5,100	178 2 0	....
25	The Indian Peoples' Famine Trust.	Board of Management.	32,59,600	....	32,59,600	1,14,483 2 4	43 3 11
26	The Ram Narayan Basu English School Fund.	Trustees of the Fund.	43,700	....	43,700	1,591 11 8	....
27	Kashi Kishore Technical School Fund.	Chairman, District Board, Mymensingh.	15,000	....	15,000	523 12 0	....
		Carried over ..	41,91,100	....	41,91,100	1,47,243 14 5	7,158 0 5

held under Act VI of 1890 on the 31st March 1936—*continued.*

Receipts.			Cash Expenditure.					
receipts.				Other payments.				
Balance left after investment.	Donations.	Total cash receipts.	Renewal fees.	Remitted to the Manager, Reserve Bank of India, Calcutta, for investment.	Payments to the administrators.	Total paid.	Balance in cash.	Remarks.
9	10	11	12	13	14	15	16	17
Rs. A. P.	Rs. A. P.	Rs. A. P.	Rs. A. P.	Rs. A. P.	Rs. A. P.	Rs. A. P.	Rs. A. P.	
....	....	21,983 13 10	....	....	18,713 13 2	18,713 13 2	3,270 0 8	
....	....	617 15 8	....	....	617 15 8	617 15 8	Nil	
....	....	8,633 14 0	....	....	8,633 14 0	8,633 14 0	Nil	
....	....	160 10 0	....	....	160 10 0	160 10 0	Nil	
....	....	104 12 0	....	....	104 12 0	104 12 0	Nil	
....	....	104 12 0	....	....	104 12 0	104 12 0	Nil	
....	....	1,291 5 4	....	....	396 0 0	396 0 0	895 5 4	
....	....	232 5 9	....	....	232 5 9	232 5 9	Nil	
....	....	3,366 10 4	....	....	3,327 10 4	3,327 10 4	39 0 0	
....	....	139 10 0	....	....	139 10 0	139 10 0	Nil	
....	....	841 6 0	....	....	841 6 0	841 6 0	Nil	
....	....	104 12 0	....	....	104 12 0	104 12 0	Nil	
....	....	178 2 0	....	....	178 2 0	178 2 0	Nil	
....	....	1,14,526 6 3	....	....	1,14,526 6 3	1,14,526 6 3	Nil	
43 5 8	....	1,635 1 4	....	....	1,591 11 8	1,591 11 8	43 5 8	
....	....	523 12 0	....	....	523 12 0	523 12 0	Nil	
43 5 8	....	1,54,445 4 6	....	....	1,50,197 8 10	1,50,197 8 10	4,247 11 8	

PART II—List and Abstract Account of securities

Case No.	Name of Endowment	Person on whose behalf held.	Particulars of Securities			Cash	
			Government Promissory Notes.	Other kinds.	Total.	Interest or dividend realized.	Other cash: Balance of previous year.
1	2	3	4	5	6	7	8
			Rs.	Rs.	Rs.	Rs. A. P.	Rs. A. P.
		Brought forward ..	41,91,100	....	41,91,100	1,47,243 14 5	7,158 0 5
28	Raja Jogendra Narain Roy Water-supply Fund.	Board of Trustees with the Magistrate of Murshidabad as President.	1,00,000	....	1,00,000	3,491 4 0	....
29	Babu Joy Gobinda Law's Fund for the relief of famine-stricken people in Bengal.	Secretary, Government of Bengal, Revenue Department.	1,45,600	....	1,45,600	5,534 1 9	61 6 1
30	Raja Mahendra Lal Khan's (of Narajole) Zenana Hospital.	Managing Committee of the King Edward Memorial Hospital, Midnapore.	35,000	....	35,000	1,221 14 0	....
31	Rani Monindra Mohini Debi Sanitary Improvement Fund.	Board of Trustees with the Magistrate of Murshidabad as President.	55,700	....	55,700	1,944 10 0	....
32	Ghritakandi Charitable Dispensary.	Magistrate, Faridpur.	15,000	....	15,000	523 10 0	....
33	Srimati Nistarini Dasi Fund.	Director of Public Instruction, Bengal.	68,200	4,000	72,200	2,719 10 10	....
34	Gobinda Sundari Dispensary Fund.	Managing Committee, Serampore Charitable Hospital.	4,000	....	4,000	139 10 4	....
35	The Chella Dispensary Trust Fund.	Magistrate, Birbhum.	20,000	....	20,000	698 4 0	....
36	The St. Paul's School Darjeeling Fund.	Governors of the St. Paul's School.	75,400	....	75,400	2,632 6 0	....
37	The Forbes Memorial Scholarship Fund.	Principal, Bengal Engineering College, Sibpur.	7,600	....	7,600	274 5 7	....
38	Somra Durga Charan High English School Fund.	Magistrate, Hooghly	10,000	....	10,000	349 2 0	....
39	Muktakeshi Debi Widow Fund.	Principal, Sanskrit College.	3,300	....	3,300	98 12 0	....
40	The Manik Chandra Das Charitable Dispensary Trust Fund	A committee of eleven members with the Subdivisional Officer, Ranaghat, as President.	33,000	....	33,000	1,152 1 10	....
41	The Ram Narain Rai Tol Fund.	Collector, Midnapore.	13,000	....	13,000	453 14 0	....
		Carried over ..	47,76,900	4,000	47,80,900	1,68,477 8 9	7,219 6 6

(a) Credited to a Local

held under Act VI of 1890 on the 31st March 1936—*continued.*

Receipts.			Cash Expenditure.					
receipts.				Other payments.				
Balance left after investment.	Donations.	Total cash receipts.	Renewal fees.	Remitted to the Manager, Reserve Bank of India, Calcutta, for investment.	Payments to the administrators.	Total paid.	Balance in cash.	Remarks.
9	10	11	12	13	14	15	16	17
Rs. A. P.	Rs. A. P.	Rs. A. P.	Rs. A. P.	Rs. A. P.	Rs. A. P.	Rs. A. P.	Rs. A. P.	
43 5 8	....	1,54,445 4 6	....	....	1,50,197 8 10	1,50,197 8 10	4,247 11 8	
....	....	3,491 4 0	....	....	3,491 4 0	3,491 4 0	Nil	
....	....	5,595 7 10	....	....	5,531 1 9 (*a*)	5,531 1 9	61 6 1	
....	....	1,221 14 0	....	....	1,221 14 0	1,221 14 0	Nil	
....	....	1,944 10 0	....	....	1,944 10 0	1,944 10 0	Nil	
....	....	523 10 0	....	....	523 10 0	523 10 0	Nil	
24 6 11	....	2,744 1 9	....	....	2,719 10 10	2,719 10 10	24 6 11	
....	....	139 10 4	....	....	139 10 4	139 10 4	Nil	
....	....	698 4 0	....	....	698 4 0	698 4 0	Nil	
....	....	2,632 6 0	....	....	2,632 6 0	2,632 6 0	Nil	
....	....	274 5 7	....	....	274 5 7	274 5 7	Nil	
....	....	349 2 0	....	....	349 2 0	349 2 0	Nil	
....	....	98 12 0	....	....	98 12 0	98 12 0	Nil	
....	....	1,152 1 10	....	....	1,152 1 10	1,152 1 10	Nil	
....	....	453 14 0	....	....	453 14 0	453 14 0	Nil	
67 12 7	....	1,75,764 11 10	....	....	1,71,431 3 2	1,71,431 3 2	4,333 8 8	

Fund.

PART II.—List and Abstract Account of securities

Case No.	Name of Endowment.	Person on whose behalf held.	Particulars of Securities.			Cash	
			Government Promissory Notes.	Other kinds.	Total.	Interest or dividend realized.	Other cash: Balance of previous year.
1	2	3	4	5	6	7	8
			Rs.	Rs.	Rs.	Rs. A. P.	Rs. A. P.
		Brought forward ..	47,76,900	4,000	47,80,900	1,68,477 8 9	7,219 6 6
42	The Dwarka Nath Pal Vedic Lectureship and Studentship Fund.	Principal, Sanskrit College.	19,500	....	19,500	680 13 9	....
43	The Jitendra Scholarship Fund.	Registrar, University of Calcutta.	10,300	....	10,300	359 10 0	....
44	The Rani Padma Sundari Debi Fund.	Magistrate, Birbhum	10,000	....	10,000	299 4 0	....
45	The Angelica George Leondy Fund.	The Committee of the District Charitable Society.	35,200	....	35,200	1,228 14 0	....
46	The Nistarini Dasi Memorial Scholarships and Prize Fund.	Principal, Presidency College, Calcutta.	18,000	....	18,000	628 6 0	....
47	The Edward VII Memorial Fund, Nadia.	Magistrate, Nadia	78,100	....	78,100	2,726 10 0	....
48	The Nistarini Dasi Trust Fund.	Superintendent, Medical College Hospital, Calcutta.	27,000	....	27,000	942 10 0	....
49	Muktakeshi Debi Widows' (Additional) Fund.	Principal, Sanskrit College.	3,300	....	3,300	98 12 0	....
50	Kanai Lal Seal Charitable Endowment Fund.	Civil Surgeon, Howrah.	1,13,300	....	1,13,300	3,955 10 0	....
51	Raja Rao Jogendra Narain Roy Bahadur Female Hospital Fund.	Dispensary Committee of Berhampore Hospital.	80,000	....	80,000	2,793 0 0	....
52	Thakur Pratap Narain Dev Barma Fund.	Secretary, Bengal Sanskrit Association.	10,300	....	10,300	359 10 0	....
53	The Ramgopal Sen Endowment.	Director of Public Instruction, Bengal.	6,400	12,400	18,800	766 3 0	42 5 9
		Carried over ..	51,88,300	16,400	52,04,700	1,83,316 15 6	7,261 12 3

held under Act VI of 1890 on the 31st March 1936—*continued.*

Receipts.			Cash Expenditure.					
receipts.				Other payments.				
Balance left after investment.	Donations.	Total cash receipts.	Renewal fees.	Remitted to the Manager, Reserve Bank of India, Calcutta, for investment.	Payments to the administrators.	Total paid.	Balance in cash.	Remarks.
9	10	11	12	13	14	15	16	17
Rs. A. P.	Rs. A. P.	Rs. A. P.	Rs. A. P.	Rs. A. P.	Rs. A. P.	Rs. A. P.	Rs A. P.	
67 12 7	....	1,75,764 11 10	....	....	1,71,431 3 2	1,71,431 3 2	4,333 8 8	
....	....	680 13 9	....	....	680 13 9	680 13 9	Nil	
....	....	359 10 0	....	....	359 10 0	359 10 0	Nil	
....	....	299 4 0	....	....	299 4 0	299 4 0	Nil	
....	....	1,228 14 0	....	....	1,228 14 0	1,228 14 0	Nil	
....	....	628 6 0	....	....	628 6 0	628 6 0	Nil	
....	....	2,726 10 0	....	....	2,726 10 0	2,726 10 0	Nil	
....	....	942 10 0	....	....	942 10 0	942 10 0	Nil	
....	....	98 12 0	....	....	98 12 0	98 12 0	Nil	
....	....	3,955 10 0	....	....	3,955 10 0	3,955 10 0	Nil	
....	....	2,793 0 0	....	....	2,793 0 0	2,793 0 0	Nil	
....	....	359 10 0	....	....	359 10 0	359 10 0	Nil	
55 9 7	....	864 2 4	....	....	766 3 0	766 3 0	97 15 4	
123 6 2	....	1,90,702 1 11	....	....	1,86,270 9 11	1,86,270 9 11	4,431 8 0	

PART II.—List and Abstract Account of securities

Case No.	Name of Endowment.	Person on whose behalf held.	Particulars of Securities.			Cash	
			Government Promissory Notes.	Other kinds.	Total.	Other cash	
						Interest or dividend realized	Balance of previous year.
1	2	3	4	5	6	7	8
			Rs.	Rs.	Rs.	Rs. A. P.	Rs. A. P.
		Brought forward ..	51,88,300	16,400	52,04,700	1,83,316 15 6	7,261 12 3
54	The Ram Chandra Goenka Zenana Bathing Ghat Fund.	The Port Commissioners, Calcutta.	11,100	....	11,100	387 8 2	....
55	The Nafar Chandra Kolay Charitable Dispensary Trust Fund	A committee of five members.	25,000	35,000	60,000	2,234 15 1	....
56	The Hiralal Mukherji Chatuspathi Prize Fund.	Secretary, Bengal Sanskrit Association.	1,700	....	1,700	53 5 7	....
57	The Debiprasad Agarwalla School Fund.	A committee of nine persons with the Magistrate, 24-Parganas, as President	34,400	....	34,400	1,219 6 10	1 15 9
58	The Irphala Krishna Mohan Institution Fund.	District Magistrate, Midnapore.	34,500	....	34,500	1,204 8 0	....
59	The Srimati Kamini Dasi Fund.	A committee consisting of not less than five and not more than nine members.	4,000	....	4,000	139 10 0	....
60	The Bindu Basini Charity Fund.	Magistrate of Khulna.	11,000	....	11,000	384 0 0	....
61	The Rani Dintarini Debi Scholarship Fund.	Magistrate of Murshidabad.	21,600	....	21,600	754 1 11	....
62	The Gopi Mohan Roy Charitable Dispensary.	A committee consisting of five *ex-officio* members and four non-official members with the Collector of Dacca as President.	55,300	....	55,300	2,061 9 1	93 10 8
63	The Sussex Trust ..	Director of Public Instruction, Bengal.	6,97,700	....	6,97,700	28,444 14 3 (*d*)	Nil(*a*)
64	The Sussex Trust Surplus Income Account.	Ditto ..	78,900	....	78,900	3,083 2 5	42,832 1 9 (*c*)
		Carried over ..	61,63,500	51,400	62,14,900	2,23,284 0 10	50,189 8 5

(*a*) Balance to end of March 1935 as shown in the previous return .. ..

Less—Amount adjusted in March (final) 1935 for scholarship paid in England .. ..

Less— Ditto ditto by credit to Surplus Account (item 64) .. .. ..

(*c*) Balance to end of March 1935 .. ..
Ditto March (final) 1935 of the Sussex Trust Charitable Endowment Fund credited to this

(*d*) Includes Rs. 80-0-0 on account of part recovery from M. A. S. Smith, a Sussex Trust scholar, in respect of advance.

held under Act VI of 1890 on the 31st March 1936—*continued*.

Receipts.			Cash Expenditure.					
receipts.				Other payments.				
Balance left after investment.	Donations.	Total cash receipts.	Renewal fees.	Remitted to the Manager, Reserve Bank of India, Calcutta, for investment.	Payments to the administrators.	Total paid.	Balance in cash.	Remarks.
9	10	11	12	13	14	15	16	17
Rs. A. P.	Rs. A. P.	Rs. A. P.	Rs. A. P.	Rs. A. P.	Rs. A. P.	Rs. A. P.	Rs. A. P.	
123 6 2	....	1,90,706 1 11	....	....	1,86,270 9 11	1,86,270 9 11	4,431 8 0	
....	....	387 8 2	....	....	387 8 2	387 8 2	Nil	
....	....	2,234 15 1	....	....	2,234 15 1	2,234 15 1	Nil	
....	....	53 5 7	....	....	53 5 7	53 5 7	Nil	
....	....	1,221 6 7	....	....	1,219 6 10	1,219 6 10	1 15 9	
....	....	1,204 8 0	....	....	1,204 8 0	1,204 8 0	Nil	
....	....	139 10 0	....	....	139 10 0	139 10 0	Nil	
....	....	384 0 0	....	....	384 0 0	384 0 0	Nil	
....	....	754 1 11	....	....	754 1 11	754 1 11	Nil	
....	....	2,155 3 9	....	....	2,061 9 1	2,061 9 1	93 10 8	
....	....	28,444 14 3	....	....	16,041 14 0 (*b*)	16,041 14 0	12,403 0 3	
1,151 5 7	....	47,066 9 9	....	12,000 0 0	....	12,000 0 0	35,066 9 9	
1,274 11 9	....	2,74,748 5 0	....	12,000 0 0	2,10,751 8 7	2,22,751 8 7	51,996 12 5	

	Rs. A. P.	Rs. A. P.
.. ..	....	12,417 10 0
.. ..	372 11 0	
.. ..	12,044 15 0	12,417 10 0
Balance	....	Nil
.. ..	30,787 2 9	....
Account during 1934-35	12,044 15 0	....
Total ..	42,832 1 9	....

	Rs. A. P.
(*b*) Paid to D. P. I.	5,000 0 0
Adjustment of scholarship paid in England ..	11,041 14 0
Total ..	16,041 14 0

PART II.—List and Abstract Account of securities

Case No.	Name of Endowment.	Person on whose behalf held.	Particulars of Securities.			Cash	
			Government Promissory Notes.	Other kinds.	Total.	Interest or dividend realized.	Other cash
							Balance of previous year.
1	2	3	4	5	6	7	8
			Rs.	Rs.	Rs.	Rs. A P.	Rs. A. P.
		Brought forward ..	61,63,500	51,400	62,14,000	2,23,284 0 10	50,189 8 5
65	The Kali Tara Charitable Dispensary Fund.	The Trustees, viz., Chairman and Vice-Chairman, District Board, Jessore.	5,000	....	5,000	174 10 0	....
66	Tincouri Dasee Fund for the Albert Victor Leper Asylum.	Commissioner of the Presidency Division and the President of the Board of Management of the Albert Victor Asylum for Lepers.	(b)	....	....	1,029 14 0	....
67	The Rao Mohesh Narayan Roy Fund.	A committee of eight members, the District Magistrate of Murshidabad being the President and the Subdivisional Officer, Lalbagh subdivision, the Secretary.	1,40,800	....	1,40,800	5,043 14 4	90 10 0
68	The Kharsuti Chandra Kishore Endowment Fund.	Inspector of Schools, Presidency Division.	10,000	....	10,000	349 2 0	....
69	The Calcutta School of Tropical Medicine Endowment Fund.	A committee of eleven members, Director-General of Indian Medical Service being the President.	2,25,000	1,65,200	3,90,200	17,143 9 0	....
70	The Madhu Sudan Basu Charitable Dispensary Fund.	District Magistrate of Howrah, President of the Trustees.	5,000	....	5,000	174 8 0	....
71	The Central Relief Fund, Bengal.	Secretary, Government of Bengal, Revenue Department.	1,08,700	....	1,08,700	3,857 13 11	3 12 0
72	The Jay Chandi Dutt Fund.	Commissioner of the Presidency Division and President of the Board of Management of the Albert Victor Asylum for Lepers.	(c)	....	....	349 2 0	....
73	The Abinash Chandra Charitable Dispensary Fund.	The Chairman and the Vice-Chairman of the District Board, Jessore.	5,300	....	5,300	264 6 0	....
		Carried over ..	66,63,300	2,16,600	68,79,900	2,51,671 0 1	50,283 14 5

(a) Credited to
(b) Rs. 29,500 returned to the Commissioner,
(c) Rs. 10,000 returned to the Commissioner,

held under Act VI of 1890 on the 31st March 1936—*continued.*

Receipts.			Cash Expenditure.					
receipts.				Other payments.				
Balance left after investment.	Donations.	Total cash receipts.	Renewal fees.	Remitted to the Manager, Reserve Bank of India, Calcutta for investment.	Payments to the administrators.	Total paid.	Balance in cash.	Remarks.
9	10	11	12	13	14	15	16	17
Rs. A. P.	Rs. A. P.	Rs. A. P.	Rs. A. P.	Rs. A. P.	Rs. A. P.	Rs. A. P.	Rs. A. P.	
1,274 11 9	....	2,74,748 5 0	....	12,000 0 0	2,10,751 8 7	2,22,751 8 7	51,996 12 5	
....	....	174 10 0	....	....	174 10 0	174 10 0	Nil	
....	....	1,029 14 0	....	....	1,029 14 0	1,029 14 0	Nil	
....	....	5,134 8 4	....	....	5,043 14 4	5,043 14 4	90 10 0	
....	....	349 2 0	....	....	349 2 0	349 2 0	Nil	
....	....	17,143 9 0	....	....	17,143 9 0	17,143 9 0	Nil	
....	....	174 8 0	....	....	174 8 0	174 8 0	Nil	
....	....	3,861 9 11	....	....	(a)3,857 13 11	3,857 13 11	3 12 0	
....	....	349 2 0	....	....	349 2 0	349 2 0	Nil	
....	....	264 6 0	....	....	264 6 0	264 6 0	Nil	
1,274 11 9	....	3,03,229 10 3	....	12,000 0 0	2,30,138 7 10	2,51,138 7 10	52,091 2 5	

a Local Fund.
Presidency Division
Presidency Division.

PART II.—List and Abstract Account of securities

Case No.	Name of Endowment.	Person on whose behalf held.	Particulars of Securities.			Cash	
			Government Promissory Notes.	Other kinds.	Total.	Interest or dividend realized.	Other cash: Balance of previous year.
1	2	3	4	5	6	7	8
			Rs.	Rs.	Rs.	Rs. A. P.	Rs. A. P.
		Brought forward ..	66,63,300	2,16,600	68,79,900	2,51,671 0 1	50,283 14 5
74	The Ramnagore Atul Bidyalaya Fund.	A committee of ten members, the District Magistrate of Hooghly being the President.	54,000	....	54,000	1,885 4 2	....
75	The Rakhal Chandra Pal Fund.	A committee of seven members, the Collector of Hooghly, for the time being, being the President.	31,000	....	31,000	1,032 4 7	....
76	The Ramendra Sundar Panthanibas Fund.	A committee consisting of five *ex-officio* members and four non-official members, the Subdivisional Officer of Kandi, for the time being, being the President.	6,000	....	6,000	209 8 0	....
77	The Nanda Lal Fund.	The Managing Committee of Mohesh Narain Academy at Lalgola, the District Magistrate of Murshidabad, for the time being, being the President.	21,500	....	21,500	750 10 0	....
78	The Raj Lakhee Mallick Charity Fund.	The Collector, 24-Parganas.	50,000	....	50,000	1,745 9 0	....
79	The Shibopada Rai Chaudhury of Chanchal Fund for boys and girls of the Industrial Home and School for blind children in Calcutta.	Secretary, Government of Bengal, Department of Agriculture and Industries.	1,00,000	....	1,00,000	3,491 4 0	....
80	The Bhabla School Mukherjee Endowment Fund.	Managing Committee of the Bhabla Primary School.	8,600	....	8,600	300 4 3	....
81	The Narendra Narayan Dutt Fund.	Collector, 24-Parganas.	12,500	3,000	15,500	441 1 3	....
		Carried over ..	69,46,900	2,19,600	71,66,500	2,61,576 13 4	50,283 14 5

(a) Credited to

held under Act VI of 1890 on the 31st March 1936—*continued.*

Receipts.			Cash Expenditure.					
receipts.				Other payments.				
Balance left after investment.	Donations.	Total cash receipts.	Renewal fees.	Remitted to the Manager, Reserve Bank of India, Calcuttta, for investment.	Payments to the administrators.	Total paid.	Balance in cash.	Remarks.
9	10	11	12	13	14	15	16	17
Rs. A. P.	Rs. A. P.	Rs. A. P.	Rs A. P.	Rs. A. P.	Rs. A. P.	Rs. A. P.	Rs. A. P.	
1,274 11 9	....	3,03,229 10 3	....	12,000 0 0	2,30,138 7 10	2,51,138 7 10	52,091 2 5	
....	....	1,885 4 2	....	....	942 10 0	942 10 0	942 10 2	
....	....	1,082 4 7	....	....	1,082 4 7	1,082 4 7	Nil	
....	....	209 8 0	....	....	209 8 0	209 8 0	Nil	
....	....	750 10 0	....	....	750 10 0	750 10 0	Nil	
....	....	1,745 9 0	....	....	1,745 9 0	1,745 9 0	Nil	
....	....	3,491 4 0	....	....	3,491 4 0 (a)	3,491 4 0	Nil	
....	....	300 4 3	....	....	300 4 3	300 4 3	Nil	
91 14 9	....	533 0 0	....	91 14 9	441 1 3	533 0 0	Nil	
1,366 10 6	....	3,13,227 6 3	....	12,091 14 9	2,48,101 10 11	2,60,192 9 8	53,033 12 7	

Local Fund.

PART II.—List and Abstract Account of securities

Case No.	Name of Endowment.	Person on whose behalf held.	Particulars of Securities.			Cash	
			Government Promissory Notes.	Other kinds.	Total.	Interest or dividend realized.	Other cash: Balance of previous year.
1	2	3	4	5	6	7	8
			Rs.	Rs.	Rs.	Rs. A. P.	Rs. A. P.
		Brought forward ..	69,46,900	2,19,600	71,66,500	2,61,576 13 4	50,283 14 5
82	The Inamul and Aminul Huq Endowment Fund.	Inspector of Schools, Presidency Division.	....	(a) 14,500	14,500	427 5 2	....
83	The Gopal Krishna Mukherjee Memorial Free Studentship Fund.	Secretary of the Executive Committee of the Suburban Reading Club.	8,000	....	8,000	279 4 4	....
84	Endowment for the maintenance of the Prosannamoyee Charitable Dispensary at Sursuna, thana Behala.	Chairman of a Committee consisting of nine members.	2,200	15,000	17,200	675 4 11	....
85	The David and the Rachel Ezra Fund.	Board of Management with His Excellency the Governor of Bengal as Chairman.	1,00,000	...	1,00,000	4,987 8 0	....
86	The Sreemati Abhaya Sundari Debi Fund.	District Magistrate, Murshidabad, as President of the Managing Committee of the Rao Mahesh Narayan Roy Charitable Endowment.	20,000	....	20,000	698 4 0	....
87	Joy Chandi Dutt Fund for the native indoor patients of the Medical College Hospital, Calcutta.	Superintendent of the Medical College Hospital, Calcutta.	25,700	....	25,700	897 4 0	....
88	The ...ghen David Synagogue Fund.	Board of Management, consisting of the members for the time being of the Board of Control of the Maghen David Synagogue, Canning Street, Calcutta.	78,600	....	78,600	2,744 2 0	....
		Carried over ..	71,81,400	2,49,100	74,30,500	2,72,285 13 9	50,283 14 5

(a) Value of 145 shares in the

held under Act VI of 1890 on the 31st March 1936—*continued*.

Receipts.			Cash Expenditure.					
receipts.				Other payments.				
Balance left after investment.	Donations.	Total cash receipts.	Renewal fees.	Remitted to the Manager, Reserve Bank of India, Calcutta, for investment.	Payments to the administrators.	Total paid.	Balance in cash.	Remarks.
9	10	11	12	13	14	15	16	17
Rs. A. P.	Rs. A. P.	Rs. A. P.	Rs. A. P.	Rs. A. P.	Rs. A. P.	Rs. A. P.	Rs. A. P.	
1,366 10 6	....	3,13,227 6 3	....	12,091 14 9	2,48,101 10 11	2,60,193 9 8	53,033 12 7	
....	....	427 5 2	....	....	427 5 2	427 5 2	Nil	
....	....	279 4 4	....	....	279 4 4	279 4 4	Nil	
....	....	675 4 11	....	....	675 4 11	675 4 11	Nil	
....	....	4,987 8 0	....	....	4,987 8 0	4,987 8 0	Nil	
....	....	698 4 0	....	....	698 4 0	698 4 0	Nil	
....	....	897 4 0	....	....	897 4 0	897 4 0	Nil	
....	....	2,741 2 0	....	....	2,741 2 0	2,744 2 0	Nil	
1,366 10 6	....	3,23,976 6 8	....	12,091 14 9	2,58,810 11 4	2,70,902 10 1	53,033 12 7	

Kalighat-Falta Railway Co., Ltd.

PART II.—List and Abstract Account of securities

Case No.	Name of Endowment.	Person on whose behalf held.	Particulars of Securities.			Interest or dividend realized.	Cash	
			Government Promissory Notes.	Other kinds.	Total.		Other cash	
							Balance of previous year.	
1	2	3	4	5	6	7	8	
			Rs.	Rs.	Rs.	Rs. A. P.	Rs. A. P.	
		Brought forward ..	71,81,400	2,49,100	74,30,500	2,72,285 13 9	50,283 14 5	
89	The Charity of Srimati Kadambini Debi.	Collector, Birbhum	9,900	....	9,900	345 10 5	....	
90	Shibapada Rai Chaudhury of Chanchal Fund II for boys and girls of the Calcutta Deaf and Dumb School.	Secretary to the Government of Bengal, Agriculture and Industries Department.	2,00,000	....	2,00,000	6,982 8 0	....	
91	Srimati Urmila Devi Benevolent Fund.	Director, Bose Institute, Calcutta.	8,800	....	8,800	307 4 0	....	
92	Brahmamayee Charitable Fund.	A committee consisting of three persons.	9,000	....	9,000	314 3 8	....	
93	The Uday Chand Free M.E. Institution Fund.	A committee of Trustees, the Chairman of the District Board of Hooghly being the President.	42,000	....	42,000	1,466 6 1	....	
94	Rani Monmohini Devi Endowment Fund.	Principal for the time being of the Rajshahi College.	24,900	....	24,900	869 6 0	....	
95	Surplus Income Account of the Rani Monmohini Devi Endowment Fund.	Ditto ..	....	....	....	(b) 120 0 0	693 13 10	
96	The Giridhari Lal Roy Widow Maintenance Fund.	Collector, Dacca ..	36,700	....	36,700	1,281 4 1	....	
97	The Edward Esmond Jewish Girls' School Fund.	Board of Management of the School consisting of the members for the time being including the President and the Vice-President of the Jewish Girls' School.	75,000	....	75,000	3,740 10 0	....	
		Carried over ..	75,87,700	2,49,100	78,36,800	2,87,713 2 0	50,977 12 3	

(a) Credited to Local
(b) Balance trans-

held under Act VI of 1890 on the 31st March 1936—*continued*.

Receipts.			Cash Expenditure.					
receipts.				Other payments.				
Balance left after investment.	Donations.	Total cash receipts.	Renewal fees.	Remitted to the Manager, Reserve Bank of India, Calcutta, for investment.	Payments to the administrators.	Total paid.	Balance in cash.	Remarks.
9	10	11	12	13	14	15	16	17
Rs. A. P.	Rs. A. P.	Rs. A. P.	Rs. A. P.	Rs. A. P.	Rs. A. P.	Rs. A. P.	Rs. A. P.	
1,366 10 6	....	3,23,936 6 8	....	12,091 14 9	2,58,810 11 4	2,70,902 10 1	53,033 12 7	
....	....	345 10 5	....	....	345 10 5	345 10 5	Nil	
....	....	6,982 8 0	....	....	6,982 8 0 (a)	6,982 8 0	Nil	
....	....	307 4 0	....	....	307 4 0	307 4 0	Nil	
....	....	314 3 8	....	....	314 3 8	314 3 8	Nil	
....	....	1,466 6 1	....	....	1,466 6 1	1,466 6 1	Nil	
....	....	869 6 0	....	....	749 6 0 (b)120 0 0	869 6 0	Nil	
....	....	813 13 10	....	....	....	....	813 13 10	
....	....	1,281 4 1	....	....	1,281 4 1	1,281 4 1	Nil	
....	....	3,740 10 0	....	....	3,740 10 0	3,740 10 0	Nil	
1,366 10 6	....	3,40,057 8 9	....	12,091 14 9	2,74,117 15 7	2 86,209 14 4	53,847 10 5	

Fund.
ferred to the Surplus Income Account of the Fund during 1935-36.

PART II.—List and Abstract Account of securities

Case No.	Name of Endowment.	Person on whose behalf held.	Particulars of Securities.			Cash	
			Government Promissory Notes.	Other kinds.	Total.	Interest or dividend realized.	Other cash. Balance of previous year.
1	2	3	4	5	6	7	8
			Rs.	Rs.	Rs.	Rs. A. P.	Rs. A. P.
		Brought forward	75,87,700	2,49,100	78,36,800	2,87,713 2 0	50,977 12 3
98	The Edward Esmond Jewish Burial Ground Fund.	Board of Management consisting of the members for the time being including the President and also the Vice-President (if any) of the Jewish Burial Board.	10,000	..	10,000	498 12 0	..
99	The Edward Esmond Maghen David Synagogue Fund.	Board of Management consisting of the members for the time being including the President and the Vice-President of the board of control (Board of Manhigim) of the Maghen David Synagogue.	50,000	..	50,000	2,493 12 0	..
100	The Nawab Ali Chowdhury Stipend Fund.	Vice-Chancellor of the University of Dacca.	16,500	..	16,500	906 6 0	67 13 9
101	Navin Krishna Mitra Memorial Fund.	A managing committee consisting of not more than five nor less than four members, the Chairman for the time being of the Joynagar Municipality being the President.	50,000	..	50,000	1,745 10 4	..
102	The Rajshahi College Scholarship Endowment Fund.	Principal for the time being of the Rajshahi College.	3,800	..	3,800	132 10 0	..
103	Surplus income account of the Rajshahi College Scholarship Endowment Fund.	Principal for the time being of the Rajshahi College.	..	..	..	12 10 0 (a)	169 10 8
104	The Mohini Mohan Roy's Endowment.	Ditto ..	6,700	..	6,700	233 14 0	..
105	Surplus income account of the Mohini Mohan Roy's Endowment.	Ditto ..	..	..	..	23 14 0 (a)	410 11 8
		Carried over ..	77,24,700	2,49,100	79,73,800	2,93,760 10 4	51,625 15 11

(a) Balance transferred to the Surplus

held under Act VI of 1890 on the 31st March 1936—*continued.*

Receipts.			Cash Expenditure.					
receipts.				Other payments.				
Balance left after investment.	Donations.	Total cash receipts.	Renewal fees.	Remitted to the Manager, Reserve Bank of India, Calcutta, for investment.	Payments to the administrators.	Total paid.	Balance in cash.	Remarks.
9	10	11	12	13	14	15	16	17
Rs. A. P.	Rs. A. P.	Rs. A. P.	Rs. A. P.	Rs. A. P.	Rs. A. P.	Rs. A. P.	Rs. A. P.	
1,366 10 6	..	3,40,057 8 9	..	12,091 14 9	2,74,117 15 7	2,86,209 14 4	53,847 10 5	
..	..	498 12 0	..	..	498 12 0	498 12 0	Nil	
..	..	2,493 12 0	..	..	2,493 12 0	2,493 12 0	Nil	
..	..	974 3 9	..	..	906 6 0	906 6 0	67 13 9	
..	..	1,745 10 4	..	..	1,745 10 4	1,745 10 4	Nil	
..	..	132 10 0	..	..	120 0 0 12 10 0 (a)	132 10 0	Nil	
..	..	182 4 8	..	..	..	..	182 4 8	
..	..	233 14 0	..	..	210 0 0 (a) 23 14 0	233 14 0	Nil	
..	..	434 9 3	..	..	..	..	434 9 3	
1,366 10 6	..	3,46,753 4 9	..	12,091 14 9	2,80,128 15 11	2,92,220 14 8	54,532 6 1	

Income Account of the Fund during 1935-36.

PART II.—List and Abstract Account of securities

Case No.	Name of endowment.	Person on whose behalf held.	Particulars of Securities.			Cash	
			Government Promissory Notes.	Other kinds.	Total.	Interest or dividend realized.	Other cash
							Balance of previous year.
1	2	3	4	5	6	7	8
			Rs.	Rs.	Rs.	Rs. A. P.	Rs. A. P.
		Brought forward	77,24,700	2,49,100	79,73,800	2,93,760 10 4	51,625 15 11
106	The Mayo Memorial Fund.	Principal for the time being of the Rajshahi College.	3,400	..	3,400	118 11 2	..
107	Surplus income account of the Mayo Memorial Fund.	Ditto ..	..	..	..	24 0 2 (a)	292 1 10
108	The Jeshurun Free School Clothing Trust Fund.	A committee consisting of Mr. Robin Ezra Gubbay and a committee of management for the time being of the Jeshurun Free School.	32,900	..	32,900	1,148 8 7	..
109	The Satyendra Prasanna Baron Sinha Memorial Endowment.	District Magistrate, Birbhum.	52,900	..	52,900	2,638 6 1	3 9 8
110	The Ram Ballav Nandan's Charitable Dispensary Fund.	Chairman for the time being of the Bansberia Municipality.	57,200	..	57,200	2,382 0 9	38 15 1
111	Ashutosh Parameswari Ward Endowment Fund.	Civil Surgeon, Hooghly.	..	40,000	40,000	1,995 0 0	..
112	The Jewish Girls' School Endowment Fund.	Committee of management of the Jewish Girls' School.	31,700	..	31,700	1,374 11 4	19 15 6
113	The Maghen David Synagogue Fund.	Board of Management of the Maghen David Synagogue.	59,700	..	59,700	2,633 5 6	52 0 2
114	The Parameswari Balika Vidyalaya Mahesh Trust Fund.	Managing Committee of the Endowment.	10,000	..	10,000	349 2 0	105 0 0
115	The Hughly Mahestala Anath Bhandar Fund.	Committee with the Chairman of Hughly-Chinsura Municipality as President and three other members.	30,000	..	30,000	1,047 6 1	..
116	The Girish Institution Fund.	Managing Committee of the Endowment.	23,900	(b) 10,000	33,900	399 11 11	..
		Total ..	80,26,400	2,99,100	83,25,500	3,07,871 9 11	52,137 10 2

(a) Balance transferred to the Surplus Income
(b) Value of 100 shares in the Darjeeling

CALCUTTA,
The 15th July 1936.

held under Act VI of 1890 on the 31st March 1936—*concluded.*

Receipts.			Cash Expenditure.					
receipts.				Other payments.				
Balance left after investment.	Donations.	Total cash receipts.	Renewal fees.	Remitted to the Manager, Reserve Bank of India, Calcutta, for investment.	Payments to the administrators.	Total paid.	Balance in cash.	Remarks.
9	10	11	12	13	14	15	16	17
Rs. A. P.	Rs. A. P.	Rs. A. P.	Rs. A. P.	Rs. A. P.	Rs. A. P.	Rs. A. P.	Rs. A. P.	
1,3 .6 10 6	..	3,46,753 4 9	..	12,091 14 9	2,80,128 15 11	2,92,220 14 8	54,532 6 1	
..	..	118 11 2	..	..	94 11 0 24 0 2 (*a*)	118 11 2	Nil	
..	..	316 2 0	..	..	..	..	316 2 0	
..	..	1,148 8 7	..	..	1,148 8 7	1,148 8 7	Nil	
..	..	2,641 15 9	..	..	2,638 6 1	2,638 6 1	3 9 8	
..	..	2,420 15 10	..	..	2,382 0 9	2,382 0 9	38 15 1	
..	..	1,995 0 0	..	..	1,995 0 0	1,995 0 0	Nil	
..	..	1,394 10 10	..	..	1,374 11 4	1,374 11 4	19 15 6	
..	..	2,685 5 8	..	..	2,633 5 6	2,633 5 6	52 0 2	
..	..	454 2 0	..	..	279 7 5	279 7 5	174 10 7	
..	..	1,047 6 1	..	..	1,047 6 1	1,047 6 1	Nil	
..	..	399 11 11	..	..	399 11 11	399 11 11	Nil	
1,366 10 6	..	3,61,375 14 7	..	12,091 14 9	2,94,146 4 9	3,06,238 3 6	55,137 11 1	

Account of the fund during 1935-36.
Himalayan Railway Co., Ltd.

G. W. GLASS,
Deputy Accountant-General, Bengal,
for *Treasurer, Charitable Endowments, Bengal.*

Statement of weekly gauge readings on the river Ganges at Rampur Boalia for the week ending the 8th August 1936.

Date.	Hour.	Height of surface above P. W. D. datum.	Height of surface above P. W. D. datum on the same date last year.	Remarks.
1936.				
2nd August	7 a.m.	59·75	57·30	Value of B. M. on Rajshahi College step =64·73 P. W. D. Zero of gauge=0·00 P. W. D.
3rd „	7 „	60·10	57·45	
4th „	7 „	60·40	57·50	
5th „	7 „	60·90	57·70	
6th „	7 „	61·15	58·00	
7th „	7 „	61·50	58·15	
8th „	7 „	61·70	58·20	

Highest recorded level on 26-8-1879=64·24.
Lowest recorded level on 24-4-1931=32·05.

S. GUPTA, *Subdivisional Officer,*
Irrigation Department, Rajshahi

Rampur Boalia, the 8th August 1936.

DEPARTMENT OF AGRICULTURE, BENGAL.

Dacca, the 5th August 1936.

First Forecast of the Cotton Crops of Bengal, 1936-37.

(*Note.*—On an average of the five years ending 1934-35, the area under the cotton crops in Bengal has represented some 0·2 per cent. of the total area under cotton in India.)

There are two crops, early and late. The "early" crop is chiefly grown in the Chittagong Hill Tracts and in the Tripura State and to a small extent in other districts. The "late" crop is grown in Bankura and Midnapore. As the late crop has not yet been sown, this forecast deals only with the early crop.

Character of the season.—The weather was generally fair for sowing and for the initial stages of growth. The present outlook is reported to be favourable on the whole.

Area sown.—The area sown is reported to be 74,222 acres this year as against 72,785 acres in the corresponding forecast of last year.

K. McLEAN,

Director of Agriculture, Bengal.

DEPARTMENT OF AGRICULTURE, BENGAL.

Dacca, the 11th August 1936.

Monthly Weather and Crop Report of Bengal for July 1936.

I. *Character of the season.*—During the month under review, the rainfall was in excess of the normal throughout the Presidency, except only in 24-Parganas, Khulna, Midnapore, Jalpaiguri, Faridpur and the Chittagong Hill Tracts, where the fall was below the average. The usual rainfall statement is appended.

II. *Progress of agricultural operations.*—Transplantation of winter paddy seedlings commenced but more rain was needed to facilitate the operation especially in the high land tracts. Harvesting of autumn rice and jute was progressing in North and East Bengal.

III. *State of standing crops.*—The condition of standing crops was reported to be generally fair.

IV. *Prospects and probable outturn.*—The outturn of summer til was estimated at 81 per cent. of the normal. Prospects of autumn rice are generally reported to be fair.

V. *Damage to standing crops.*—No damage to standing crops was reported from any part of the province.

VI. *Condition of agricultural stock.*—The condition of live-stock was, on the whole, fair. Sporadic cases of cattle disease were, however, reported from seventeen districts of the Presidency and from the States of Cooch Behar and Tripura.

VII. *Failure of pasturage and fodder.*—Insufficiency of fodder was reported from parts of Birbhum.

VIII. *Prices of food grains.*—During the second fortnight of the month the retail prices of common rice of the cheapest quality rose in six districts, fell in four and remained stationary in the rest of the Presidency. The prices ranged from 9½ seers per rupee in Burdwan to 13½ seers per rupee in Khulna.

IX. *Condition of agricultural population.*—The condition of agricultural population was, on the whole, fair, except in parts of 24-Parganas, Nadia, Murshidabad, Khulna, Burdwan, Birbhum, Bankura and Hooghly, where distress continues.

S. ABDULLAH,
for *Director of Agriculture, Bengal.*

Statement showing the normal and actual rainfall in each district during July 1936.

Division.	District.	Normal district rainfall for the month of July.	Actual district rainfall for the month of July 1936.	Variation from the normal.	Division.	District.	Normal district rainfall for the month of July.	Actual district rainfall for the month of July 1936.	Variation from the normal.
		Inches.	Inches.	Inches.			Inches.	Inches.	Inches.
Presidency ..	24-Parganas ..	13·06	12·76	−0·30	Rajshahi—*concld.*	Rangpur ..	15·25	26·23	+10·98
	Nadia ..	9·97	11·98	+2·01		Bogra ..	12·07	16·76	+4·69
	Murshidabad ..	10·81	15·47	+4·66		Pabna ..	10·57	13·68	+3·11
	Jessore ..	11·08	12·16	+1·08		Malda ..	12·10	18·96	+6·86
	Khulna ..	14·77	14·52	−0·25					
Burdwan ..	Burdwan ..	11·00	13·42	+2·42	Dacca ..	Dacca ..	13·27	16·31	+3·04
	Birbhum ..	12·43	15·05	+2·62		Mymensingh ..	16·70	24·20	+7·50
	Bankura ..	11·47	16·53	+5·06		Faridpur ..	12·85	10·92	−1·93
	Midnapore ..	11·54	10·96	−0·58		Bakarganj ..	18·41	19·14	+0·73
	Hooghly ..	11·84	11·88	+0·04	Chittagong ..	Chittagong ..	26·42	27·55	+1·13
	Howrah ..	12·59	14·95	+2·36		Tippera ..	13·75	22·94	+9·19
Rajshahi ..	Rajshahi ..	11·62	13·66	+2·04		Noakhali ..	23·55	25·04	+1·49
	Dinajpur ..	16·21	18·74	+2·53		Chittagong Hill Tracts.	22·18	19·80	−2·38
	Jalpaiguri ..	34·81	31·15	−3·66	Cooch Behar ..	..	25·46	32·21	+6·75
	Darjeeling ..	31·45	34·08	+2·63	Tripura State ..	..	12·10	27·51	+15·41

DISTRICT REPORTS ON WEATHER AND CROPS.

For the week ending on the 12th August 1936.

Summary.—During the week the rainfall was generally moderate to heavy. It has facilitated the cultivation of winter paddy. Harvesting of autumn crops is in brisk progress. Prospects of standing crops are generally satisfactory. During the week ending Saturday, the 8th August, 2,219 and 5,109 persons received gratuitous relief in Nadia and Murshidabad, respectively. In Burdwan, daily average of persons receiving gratuitous relief was 8,190 during the week ending Saturday, the 8th idem. Test relief works have been closed in 24-Parganas. The average price of common rice for the province has risen by about 0·30 per cent. as compared with that of the previous week.

Serial No.	District and sub-division.	Rainfall.	Price of common rice, in seers, per rupee.		Character of the weather, condition of crops, etc.
			This week.	Previous week.	
1	2	3	4	5	6
		Inches.			
1	24-Parganas ..	2·61	9½	9 5/16	Weather seasonable. Fodder and water are sufficient. No import or export of paddy except in Basirhat where import of paddy from East Bengal continues. Transplantation is in full swing. Test relief works have been closed. Agricultural loans also gratuitous relief were distributed in Sadar, Basirhat and Diamond Harbour. Condition of jute plants is not satisfactory in Basirhat, and not healthy in Sadar. Some damage caused by insects. 3-anna crops harvested in Basirhat. Steeping water ample in Basirhat.
	Diamond Harbour..	3·16	9½	9⅜	
	Barrackpore ..	3·61	8½	8⅜	
	Baraset ..	1·90	9	9	
	Basirhat ..	4·39	11	11	
2	Nadia ..	3·08	8⅜	8⅜	Weather seasonable. Agricultural operation is going on in full swing. Fodder and water are sufficient. No agricultural loan distributed during the week. Gratuitous relief was given to 32 persons in Sadar, 2,142 persons in Chuadanga and to 45 persons in Meherpur for the week ending 8th August. Condition of jute plants fair. Steeping water ample. Some damage by insects in Ranaghat. River level higher. Harvesting not yet commenced except in Kushtia sub-division.
	Kushtia ..	4·62	10	10	
	Meherpur ..	8·00	11	11	
	Chuadanga ..	4·33	11	11	
	Ranaghat ..	3·33	9½	9½	
3	Murshidabad ..	2·93	9⅜	9⅜	Weather seasonable. Prospects of standing crops are favourable. Fodder and water are sufficient. No large import or export. Cattle-disease reported from Kandi and Jangipur subdivisions. Number of persons receiving gratuitous relief in the distressed areas for the week ending Saturday, the 8th August, was 269, 3,480 and 1,360 in Lalbagh, Kandi and Jangipur subdivisions, respectively. Condition of jute plants healthy and growth satisfactory. Slight damage caused by insect and flood. Steeping water ample. River level 1 foot higher. Harvesting not yet commenced.
	Lalbagh ..	3·18	10½	10½	
	Jangipur ..	2·94	10	10½	
	Kandi ..	3·99	9½	9⅜	
4	Jessore ..	4·34	11	11½	Weather seasonable. Prospects of standing crops are fair. Harvesting of *aus* paddy is in progress. No large export or import. Fodder and water are sufficient. Condition of jute plants healthy and growth satisfactory. No damage. Steeping water sufficient. River level same as in last year, except in Bongaon where river level higher.
	Jhenidah ..	8·62	13	13	
	Magura ..	3·10	13	12	
	Narail ..	5·19	12	13	
	Bongaon ..	2·50	10	10	
5	Khulna ..	5·88	10	10	Weather seasonable. Fodder and water are sufficient. Test relief works suspended. Condition of jute plants healthy. No damage. Steeping water ample. River level higher.
	Satkhira ..	(*n*)	(*n*)	10½	
	Bagerhat ..	3·50	8½	8½	

(*n*) Not reported.

Serial No.	District and sub-division.	Rainfall.	Price of common rice, in seers, per rupee.		Character of the weather, condition of crops, etc.
			This week.	Previous week.	
1	2	3	4	5	6
		Inches.			
6	Burdwan ..	3·41	9½	9½	Weather seasonable. Condition of crop is favourable. Fodder is sufficient. 8,190 persons daily on avarage received gratuitous relief during the week ending 8th August 1936. Condition of jute plants healthy. No damage. Steeping water sufficient. River level lower. Harvesting not yet commenced.
	Asansol ..	5·06	11	11	
	Katwa ..	6·34	9	9	
	Kalna ..	4·08	8½	8½	
7	Birbhum ..	6·47	10	10	Weather seasonable and cloudy. Prospects of standing crops are fair. Transplantation of winter paddy is about to finish. Water is sufficient but there is scarcity of foddor.
	Rampurhat ..	3·75	10	10	
8	Bankura ..	5·65	10½	10	Weather seasonable. Transplantation of paddy seedlings is nearly completed. *Boro* and *Tatka* paddy are being harvested in Simlapal and Taldangra thanas. Prospects of standing crops are good. Fodder and water are sufficient. Cattle-disease is reported from Khatra, Ranibunch, Borjora, Simlapal and Taldangra thanas.
	Vishnupur ..	3·53	9⅜	9⅜	
9	Midnapore ..	3·84	10	10	Transplantation of winter paddy continues. Condition of jute plants is fair. Steeping water ample. Fodder and water are sufficient.
	Contai ..	12·57	9	9 7/16	
	Tamluk ..	2·98	8½	9	
	Ghatal ..	1·32	11½	11	
	Jhargram ..	2·47	10	9	
10	Hooghly ..	3·11	9½	9½	Weather seasonable. Fodder and water are sufficient. Condition of jute plants healthy. No damage. Steeping water ample. River level higher. About 6-anna crops harvested in Arambagh.
	Serampore ..	1·72	9½	9½	
	Arambagh ..	2·29	9½	9½	
11	Howrah ..	4·18	10	10	Transplantation of winter paddy is almost over. Fodder and water are sufficient. Condition of jute plants healthy. River level lower. Harvesting not yet commenced.
	Uluberia ..	2·94	9½	9½	
12	Rajshahi (Rampur-Boalia).	3·17	9⅝	9½	Weather seasonable. Condition of standing crops appears to be fair. Fodder and water are sufficient. Condition of jute plants healthy and growth satisfactory. No appreciable damage. Steeping water sufficient. River level normal. About 6-anna crops harvested.
	Naogaon ..	1·34	10½	10½	
	Nator ..	2·33	9¾	9¾	
13	Dinajpur ..	2·48	10	10	Weather seasonable. Transplantation of winter paddy and harvesting of jute continue. Fodder and water are sufficient. Cattle-disease is reported from Birganj thana. Condition of jute plants healthy. No damage. Steeping water ample. River level lower than last year. Harvesting continues.
	Thakurgaon ..	0·34	11	11	
	Balurghat ..	12·70	11	11½	
14	Jalpaiguri ..	1·74	10	10	Transplantation of winter paddy and harvesting of *bhadoi* paddy are nearing completion. Fodder and water are sufficient. Cattle-disease is reported from Alipur Duar. Condition of jute plants satisfactory. No damage. Steeping water insufficient in some places. About 4-anna crops harvested.
	Alipur ..	4·44	9½	10	

Serial No.	District and sub-division.	Rainfall.	Price of common rice, in seers, per rupee.		Character of the weather, condition of crops, etc.
			This week.	Previous week.	
1	2	3	4	5	6
		Inches.			
15	Darjeeling ..	6·82	8	8	Weather favourable. Transplantation of paddy and *marua* is in progress. *Bhuta* and potatoes are being harvested. Fodder and water are sufficient. Condition of jute plants fair. No damage. Steeping water ample. Harvesting not yet commenced.
	Kurseong ..	7·36	8	8	
	Siliguri ..	5·43	9½	10	
	Kalimpong ..	7·04	7	6½	
16	Rangpur ..	1·89	11	11	Weather hot and cloudy. More rain is badly needed. Prospects of standing crops are fair. Transplantation of *aman* paddy continues. No large export or import. Fodder and water are sufficient. Condition of jute plants healthy. No damage. Steeping water ample. About 6-anna crops harvested.
	Nilphamari ..	0·24	10½	(n)	
	Kurigram ..	0·87	10	10	
	Gaibandha ..	2·79	9	9	
17	Bogra ..	1·48	10½	10½	Agricultural operation not affected by weather condition. Jute is being harvested. Fodder and water are sufficient. Condition of jute plants not healthy in the eastern and central parts of the district. No damage. Steeping water sufficient. About 6-anna crops harvested.
18	Pabna ..	3·16	10	10	Weather seasonable. Condition of standing crops is satisfactory. Flood water is still rising. Harvesting of *aus* paddy and jute is in full swing. Fodder and water are sufficient. Condition of jute crop satisfactory. No damage. Steeping water sufficient. Harvesting 12 annas at Serajganj and 8 annas at Sadar.
	Serajganj ..	2·30	11	11½	
19	Malda ..	4·66	10½	10½	Weather cloudy. Transplantation of winter rice continues. Fodder and water available. Some damage done to crop by flood. Steeping water ample. Harvesting not yet commenced.
20	Cooch Behar ..	1·94	12 1/16	12½	Weather seasonable. Preparation of lands for winter paddy and transplantation of seedlings continue briskly. Harvesting of autumn paddy, cutting, steeping and washing of jute continuing. Prospects and condition of standing crops fair. Fodder and water sufficient. Cattle-disease is reported from Dinhatta and Tufanganj subdivisions. Condition of jute plants satisfactory. No damage. Steeping water ample. About 3½-anna crops harvested.
21	Dacca ..	6·90	11	11	Rainfall at North Sadar (Kapasia) 1·16. Weather seasonable and its effects on the agricultural operations are fair. No large export and import. Jute plants are healthy and their growth is satisfactory. Damage to the extent of 2 annas by the sudden rise of water in Munshiganj. About 8-anna crops harvested. River level almost same as in last year. Fodder and water are sufficient. Cattle-disease is reported except in North circle of Narayanganj subdivision.
	Manikganj ..	4·21	10	10	
	Narayanganj ..	10·80	12	12	
	Munshiganj ..	6·67	10½	10½	

(n) Not reported.

Serial No.	District and sub-division.	Rainfall.	Price of common rice, in seers, per rupee.		Character of the weather, condition of crops, etc.
			This week.	Previous week.	
1	2	3	4	5	6
		Inches.			
22	Mymensingh ..	1·23	10	10	Weather seasonable. Harvesting continues. Condition of crops is fair. Fodder and water are available. Condition of jute plants satisfactory except in Sadar subdivision. No damage. Steeping water ample. River level lower than last year. About 8-anna crops harvested.
	Jamalpur ..	3·12	10½	(n)	
	Tangail ..	1·55	10	10	
	Netrakona ..	4·25	11⅛	11⅛	
	Kishorganj ..	2·78	10⅛	10⅛	
23	Faridpur ..	2·26	11½	11½	Weather seasonable. Condition of standing crops is fair. Fodder and water are sufficient. Condition of jute plants healthy. No damage. Steeping water ample. River level slightly higher than last year. About 5-anna crops harvested.
	Goalundo (Rajbari)	5·89	11	11	
	Madaripur ..	3·71	10½	10½	
	Gopalganj (a) ..	(n)	(n)	11	
24	Bakarganj (Barisal)	7·11	10½	10½	Weather seasonable. Prospects of standing crops are not bad in Sadar and fair in Patuakhali and Pirojpur and good in Bhola. Fodder and water are sufficient. Condition of jute plants little better. No damage. Steeping water sufficient. River level normal. About 8-anna crops harvested.
	Pirojpur ..	5·50	10	(n)	
	Patuakhali ..	11·47	10½	10½	
	Dakshin Shahazpur (Bhola).	5·32	10	10	
25	Chittagong ..	12·43	10 11*	10 11*	Weather seasonable. Condition of standing crops is fair. Fodder and water are sufficient. Some areas in Satkania and Banskhali thanas were flooded by rain water with no serious consequence. Cattle-disease is reported from places. Panga salt sells at 14 seers at Sadar.
	Cox's Bazar ..	(n)	(n)	11	
26	Tippera (Comilla) ..	6·37	10½	10½	Weather fair. Condition of jute plants healthy. No damage. Steeping water ample. River level same as in last year. About 8-anna crops harvested.
	Brahmanbaria ..	1·64	10½	10½	
	Chandpur ..	4·17	11½	11½	
27	Noakhali ..	1·34	10½	10½	Weather seasonable. Cattle-disease (Anthrax) prevailing in Begamganj and Senbagh police-stations in Sadar has been brought under control by vaccination. Fodder and water sufficient. Condition of jute plants healthy. A little damage due to excessive rain. Steeping water ample. River level a little lower than last year. About 7-anna crops harvested.
	Feni ..	6·65	10¾	10¾	
28	Chittagong Hill Tracts.	9·56	11	11	Weather seasonable. Its effects are favourable. Cattle-disease is gradually subsiding. Fodder and water are sufficient.
29	Tripura State ..	3·33	10½	10½	Weather seasonable. Fodder and water are sufficient. Cattle-disease exists in Belonia Division. Cotton sells at Rs. 9 to Rs. 12 and jute at Rs. 2-8 to Rs. 5-8 per maund. Condition of jute plants healthy. No damage. Steeping water ample. Harvesting not yet commenced.

(a) The rainfall at Haridaspur, which is very near to Gopalganj, is shown here.

* Burma rice. (n) Not reported.

S. ABDULLAH, for *Director of Agriculture, Bengal.*

Dacca, the 17th August 1936.

Printed and published by the Superintendent, Government Printing, Bengal Government Press, Alipore, Bengal, on the 20th August 1936.

Registered No. C207.

No. 35 of 1936.

BENGAL SECRETARIAT LIBRARY

The Calcutta Gazette

Published by Authority

THURSDAY, AUGUST 27, 1936.

CONTENTS:

	Page.
Part I.—Orders and Notifications by the Governor of Bengal, the Government of Bengal, the High Court, Government Treasury, etc.	1989—2050
Part IA.—Orders and Notifications by the Government of India republished for general information	229—232
Part IB.—Educational Notices ..	1357—1359
Part II.—Advertisements ..	787—826
Part III.—Acts of the Bengal Legislative Council	*Nil*
Part IV.—Bills introduced in the Bengal Legislative Council, Reports of Select Committees presented or to be presented to that Council, and Bills published before introduction in that Council ..	*Nil*
Part V.—Acts of the Indian Legislature assented to by the Governor-General and Ordinances promulgated under section 72 of the Government of India Act ..	*Nil*
Part VI.—Bills introduced in the Council of State and Legislative Assembly, Reports of Select Committees presented to the Council and Assembly and Bills published under rule 18 of the Indian Legislative Rules	*Nil*
Supplement No. 35 :—	
Cotton Ginning and Pressing - Weekly Gauge Readings - Weekly Weather and Crop Report Prices-current - Weekly Vital Statistics	1159—1172

PART I

Orders and Notifications by the Governor of Bengal, the Government of Bengal, the High Court, Government Treasury, etc.

Orders by the Government of Bengal.

No. 9611A.

Appointments and Transfers.

General.

Rajshahi-Dacca.—No. 9376A.—18th August 1936.—Mr M. Ahmad, I.C.S., Joint Magistrate and Deputy Collector, Rajshahi, is appointed to have charge of the Manikganj subdivision of the Dacca district.

Mymensingh-Pabna-Midnapore-Darjeeling-Noakhali - Tippera - Murshidabad - Dinajpur - Nadia-Calcutta-Bakarganj.—No. 9388 A.—19th August 1936.—The Sub-Deputy Collectors, named below, are appointed to be Deputy Magistrates and Deputy Collectors on probation :—

Babu Pramod Lal Dhar, B.A., Mymensingh.

Babu Khagendra Nath Mitra, M.A., Serajganj, Pabna.

Babu Jogendra Nath Mantra, M.A., B.L., Assistant Settlement Officer, Contai, Midnapore.

Babu Nihar Chandra Chakrabatti, M.A., Assistant Secretary, Board of Economic Enquiry.

Maulvi Muhammad Fazlur Rahman, M.A., B.L., Darjeeling.

Maulvi Khalil Ahmad, B.A., Mymensingh.

Babu Jogesh Chandra Chakrabatti, B.A., Khas Mahal Officer, Noakhali.

Babu Gadadhar Singh Roy, M.A., B.L., Tippera.

Maulvi Motaharul Huq, M.A., B.L., Murshidabad.

Babu Surendra Nath Roy, M.Sc., Dinajpur.

Babu Purna Chandra Sen, M.A., Nadia.

Babu Jatindra Kumar Mazumdar, M.Sc., on leave.

Babu Dhirendra Nath Banarji, M.A., Midnapore.

Babu Shyamananda Banarji, M.A., Registrar, Chief Presidency Magistrate's Court, Calcutta.

Babu Himangshu Jyoti Mazumdar, B.A., Bakarganj.

Maulvi Khurshed Ali, M.A., Midnapore.

Bankura.—No. 9408A.—20th August 1936.—Babu Kumud Kumar Banarji, Deputy Magistrate and Deputy Collector, Bankura, is appointed temporarily to have charge of the Sadar subdivision of that district.

Tippera-Chittagong.—No. 9437A.—20th August 1936.—Babu Dhirendra Kumar Ghosh, Deputy Magistrate and Deputy Collector, Tippera, is transferred to the headquarters station of the Chittagong district.

Tippera. No. 9443A.—20th August 1936.—Khan Sahib Muhammad Raziuddin Ali, Deputy Magistrate and Deputy Collector, Tippera, is appointed to have charge of the Sadar subdivision of that district.

Hooghly-Tippera.—No. 9445A.—20th August 1936.—Babu Bipul Chandra Chatarji, Deputy Magistrate and Deputy Collector, Serampore, Hooghly, is transferred to the headquarters station of the Tippera district.

POLICE.

Bakarganj-Dacca.—No. 9430A.—20th August 1936.—The orders of the 15th August 1936, transferring Rai Sahib Jamini Mohan Chatarji, officiating Deputy Superintendent of Police, Bakarganj, to the headquarters station of the Dacca district, are cancelled.

Dacca.—No. 9431 A.—20th August 1936.—In modification of the orders of the 15th August 1936, Babu Anath Nath Ganguli, Deputy Superintendent of Police, on leave, is posted to the headquarters station of the Dacca district.

Midnapore.—No. 9488A.—22nd August 1936.—Mr. T. G. H. Holman, I.P., officiating Additional Superintendent of Police, Midnapore, acted, in addition to his own duties, as Superintendent of Police of that district, from the 18th May to the 17th June 1936, inclusive.

The orders contained in Government notification No. 4939A., dated the 1st June 1936, are cancelled.

Leave.

GENERAL.

Bogra.—No. 9362A.—18th August 1936.—Maulvi Saleh Abdur Rahim, Deputy Magistrate and Deputy Collector, Bogra, is allowed leave on average pay for two weeks, under rule 81 (*b*) (*ii*) of the Fundamental Rules, with effect from the 3rd August 1936.

24-Parganas.—No. 9364A.—18th August 1936.—Mr. E. G. Creek, I.C.S., Joint Magistrate and Deputy Collector, Diamond Harbour, 24-Parganas, was allowed leave on average pay for four days, under rule 81 (*b*) (*i*) of the Fundamental Rules, in extension of the leave granted to him under the orders of the 16th July 1936.

Mymensingh.—No. 9405A.—19th August 1936.—Babu Dhurjati Kumar Datta, Sub-Deputy Collector, Kishoreganj, Mymensingh, is allowed leave on average pay, under rule 81 (*b*) (*ii*) of the Fundamental Rules, from the 18th September 1936 or any subsequent date on which he may avail himself of it, to the 17th January 1937, inclusive.

Khulna.—No. 9417A.—20th August 1936 — Mr. S. Mukherji, District and Sessions Judge, Khulna, is allowed leave on average pay, under rule 81 (*b*) (*ii*) of the Fundamental Rules, from the 30th July 1936 to the 13th October 1936, inclusive.

Jessore.—No. 9460A.—21st August 1936.—Babu Harendra Nath Datta, Deputy Magistrate and Deputy Collector, Jessore, is allowed leave on average pay for three months, under rule 81(*b*)(*ii*) of the Fundamental Rules, with effect from the 24th August 1936 or any subsequent date on which he may avail himself of it.

No. 9483A.—22nd August 1936.—Mr. S. P. H. Cadman, I.C.S., has been granted by the High Commissioner for India an extension of leave on half average pay for four days.

POLICE.

Pabna.—No. 9481A.—22nd August 1936.—Mr. Kazi Anwarul Haque, I.P., Assistant Superintendent of Police, Serajganj, Pabna, is allowed leave on average pay for three weeks, under rule 81(*b*)(*ii*) of the Fundamental Rules, with effect from the 27th September 1936.

Bogra.—No. 9482A.—22nd August 1936.—Mr. Jitendra Nath Ray, I.P., Superintendent of Police, Bogra, is allowed leave on average pay for seven days, under rule 81(*b*)(*ii*) of the Fundamental Rules, with effect from the 4th August 1936.

No. 9603A.—24th August 1936.—In modification of the orders of the 25th February 1936, Mr. M. K. Johnston, I.P., is allowed leave on average pay for six months and two days, under rule 81(*b*) (*i*) of the Fundamental Rules, with effect from the 10th April 1936.

G. P. HOGG,

Chief Secy. to the Govt. of Bengal.

NOTIFICATION.

No. 9474A. –21st August 1936. In pursuance of Rule IX of the Bengal Provincial Services Recruitment Rules* published in notification No. 7183A., dated the 22nd May 1930, the Government of Bengal are pleased to notify the following particulars and instructions regarding the direct appointments to be made in 1937 to the Bengal Civil Service (Executive) and the Bengal Junior Civil Service :—

1. **Vacancies.** –The following vacancies will be filled by direct appointments :

Bengal Civil Service (Executive)	..	.. 7
Bengal Junior Civil Service	..	.. 19

In addition to these appointments 2 appointments in the Upper Division of the Bengal Secretariat clerical service will be available to candidates who qualify for appointment to the abovenamed service but whose places in the list are not sufficiently high to enable them to secure appointments to the Bengal Civil Service (Executive) and the Bengal Junior Civil Service.

Government reserve the right to fill up from this examination any additional vacancies which occur up to the date of the examination or within such period thereafter as Government may think fit to prescribe.

Each candidate will be required to specify in his application the service or services for which he desires to compete, placing them in the order of his preference, and *the choice thus indicated will be final.* Appointments will be assigned to successful competitors with due consideration of their choice and the number of vacancies in the services.

2. **Method of recruitment.** The appointments will be made by competitive examination in the manner prescribed in Part B of Schedule II of the Bengal Provincial Services Recruitment Rules.

3. **Qualifications.** The indispensable qualifications of a candidate are–

(*i*) that he is a native of Bengal or has a permanent domicile within the Presidency of Bengal ;

(*ii*) that he is a natural born subject of His Majesty, or of an Indian State in respect of whom the Governor-General in Council has made a declaration under section 96A of the Government of India Act ;

(*iii*) that he shall have attained the age of 22 and shall not have attained the age of 25 on the 1st October 1936 ;

(*iv*) that he is a graduate of a recognised University ;

(*v*) that he is of good character ; and

(*vi*) that he is of sound health, good physique, active habits and free from organic defect or bodily infirmity.

Along with his application every candidate shall submit proof of his age as explained in the form of application and certificates, written not more than one year prior to the date of his application, from two responsible persons unconnected with his College or University, and not related to him, testifying to his private character and stating that he is a native of or has a permanent domicile within the Province of Bengal.

Copies attested by the nominating authorities or by responsible persons of the certificates may be submitted.

4. **Applications –Method of submission of fee, etc.** – (*i*) A person desiring to be admitted to the examination shall apply before the 30th November 1936 to the head of the college from which he passed his examination for the degree of Bachelor of Arts, Science, Commerce, etc. A candidate who passed the examination as a non collegiate student shall send in his application to the Registrar, Calcutta University, together with a certificate of character signed by the Principal of his college if he was connected with one, and by the Magistrate of the district in which he is resident in other cases : candidates from the Dacca University shall apply to the Registrar, Dacca University. All other candidates (not included in the previously mentioned categories) shall apply to the Director of Public Instruction, Bengal :

Provided that in no case shall a candidate apply to more than one of these authorities, and that such application shall always be made through their Durbars by persons resident in a State in India.

(*ii*) Applications shall be made, in the form shown in Schedule I, copies of which may be obtained from the heads of colleges, the Registrars of the Calcutta and Dacca Universities, and the Director of Public Instruction.

(*iii*) No application will be taken into consideration by the receiving authority unless it is accompanied by non-judicial stamps of the value of Rs. 5 or a chalan showing payment into a Government treasury in Bengal of the sum of Rs. 5. This payment is obligatory whether such application is subsequently rejected or not. Applications stamped with postage stamps will not be accepted

5. **Selection Committee.** The Government of Bengal will appoint a Selection Committee to examine the applications of nominated candidates and their eligibility for admission to the examinations. This Committee will be composed of officials and non-officials in equal numbers and will be presided over by a high officer of Government.

6. **Nomination.** – The heads of colleges, the Registrars of the Calcutta and Dacca Universities, and the Director of Public Instruction, Bengal, shall forward to the Selection Committee before the 14th December

*Copies of these Rules (price annas six) are obtainable from the Officer in charge, Book Depôt, Bengal Secretariat, Calcutta.

1936, the applications of candidates nominated in accordance with the allotment of nominations shown in Schedule II and shall certify the moral character of each candidate so nominated. The application of non-collegiate students nominated by the Registrar of the Calcutta University should be supported by the character certificates mentioned in paragraph 3 above. In making these nominations, due regard should be paid to the desirability of different classes and communities being represented in the public service. Care should be taken to nominate only such candidates as are likely to pass the medical examination since experience shows that a considerable number of candidates successful in the literary examination fail to pass the medical test.

7. **Selection certificates.**—In order to make the appraisement of individual merits of candidates possible, the Selection Committee shall issue certificates of selection to such of the nominated candidates, not exceeding 200 in all, as it considers, qualified to appear at the examination. The selection or rejection of a candidate by the Selection Committee shall be final, and no candidate shall be admitted to the examination unless he holds such a certificate :

Provided that in making their choice the Selection Committee shall give all possible consideration to the cases of candidates of the minority communities and the backward classes and shall call for further nominations from the heads of colleges or Commissioners of Divisions if the number of selected Muhammadan candidates does not reach 45 per cent. of the total number selected. The additional nominations received from the nominating authorities in respect of Muhammadan candidates are not considered if the regular nominations reach the prescribed quota.

8. **Particulars of candidates.**—The Selection Committee may require such further proof or particulars from the candidates as it may consider necessary, and may make enquiries regarding their character and domicile.

9. **Examination fee and time-table.**—Every candidate to whom a certificate of selection has been issued will, within a week from the date of its receipt, deposit in the nearest treasury in Bengal a sum of Rs. 50 as examination fee and forward the receipt for the same to the Secretary to the Selection Committee. No part of the fee will be returnable to a candidate. Delay in this respect may render a candidate's name liable to removal from the list of examinees. On complying with this requirement, the candidates will receive from the Secretary a time-table for the examination. The examination will commence on the 25th February 1937, and will be held at the Presidency College, Calcutta.

10. **Canvassing.**—Any attempt on the part of a candidate to enlist support for his application through persons of influence or officials of Government will disqualify him for appointment. Spontaneous recommendations from persons interested in the candidates, or otherwise known to them, will be disregarded.

11. **Ineligibility of Government servants.**—Unless specially exempted by Government in the Appointment Department by general or special order, no person holding a substantive appointment in Government service or an appointment on probation against a substantive vacancy under Government is eligible to appear at the competitive examination. Whenever such exemption is granted, the candidate will be subject to selection by the Selection Committee, as if he were duly nominated under paragraph 6 above. Persons holding purely temporary posts under Government should submit their applications in the manner prescribed in paragraph 4 above.

12. **Syllabus of examination and marks.**—The examinations will be held in the subjects and according to the syllabus shown in Schedule III which also indicates the numerical value to be attached to each paper at the examination.

As the possession of a knowledge of a provincial vernacular is an essential condition of appointment, candidates, whose ordinary spoken and written language is not Bengali, must take up translation from English into one of the provincial vernaculars named below :—

(*i*) Bengali, (*iii*) Urdu,
(*ii*) Hindi, (*iv*) Nepali,

and *vice versa* in the compulsory paper. Successful candidates, however, who have offered any language other than Bengali in that paper and are appointed to a service for which there is a Departmental Examination, will be required to pass completely the Departmental Examinations in Bengali within two years of the date of their appointment to the service.

13. **Medical Examination.**—As soon as the results of the examinations have been declared, a proportion of the candidates who have qualified will be called upon to appear before a Medical Board for a certificate of their fitness for Government service in form A of Schedule IV of the Bengal Provincial Services Recruitment Rules. An order to appear before the Medical Board must not however be understood to mean that the candidate, if found fit, will necessarily receive an appointment as the number of candidates who will be summoned for medical examination will be slightly in excess of the total number of vacancies, and the question of his appointment will depend upon the results of the medical examination taken as a whole. The regulations governing the physical examination of candidates are set forth in Schedule IV of the Bengal Provincial Services Recruitment Rules and intending candidates are advised before they apply for admission to the examination to satisfy themselves that they are likely to qualify as physically fit under those regulations, for recent experience has shown that a considerable number of the candidates at the competitive examinations are subsequently rejected by the Medical Board as unfit.

G. P. HOGG,
Chief Secy. to the Govt. of Bengal.

Note.—The attention of the candidates is invited to the introduction of a *viva-voce* test (*vide* page 8, Schedule III).

SCHEDULE I.

Write your surname here.....

Application form.

For the use of candidates seeking admission to the competitive examination for appointment to the Bengal Civil Service (Executive) and the Bengal Junior Civil Service.

N.B.—1. Copies of the form may be obtained on application to the Principals of Colleges, Registrars of the Calcutta and Dacca Universities, and the Director of Public Instruction.

2. Before filling up the form the candidate should verify from the rules and the syllabus that he is eligible for admission to the examination.

3. The form should be filled up in the candidate's own handwriting and returned **by the 30th November 1936** to the Principal of the College by collegiate students, to the Registrar, Calcutta University, by non-collegiate students, to the Registrar, Dacca University, by candidates from that University, and to the Director of Public Instruction, by all other candidates.

Applications received after the prescribed date will not be accepted.

4. If a candidate who fills up and returns the application form does not receive an acknowledgment for the same within a reasonable time, he should at once communicate the fact to the authority to whom the form was returned.

5. Should any of the particulars furnished be found to be false within the knowledge of the candidate, he will, if appointed, be liable to be dismissed. The wilful suppression of any material fact will also be similarly penalized.

6. Every candidate must submit with his application form a copy of his Matriculation certificate duly attested by a Magistrate or other responsible person. If the Matriculation certificate does not contain sufficient particulars to show that the candidate is qualified by age to enter for the examination, a certificate from the candidate's University or College showing his date of birth as recorded on entering the University or College must also be furnished. The age of a candidate as recorded on entering his University is regarded as correct unless there is a proof to the contrary. If a candidate claims that his age is other than as so recorded, he must submit with his application the evidence on which he bases his claim. In such a case the Selection Committee will require among other evidence a satisfactory explanation of the circumstances in which a wrong age was recorded at the time of entry into the University. They will also require a statement of any attempts made by the candidate to have the University record amended and of the results of such attempts. The statement of age must tally with the statement of age made in any previous application of this nature and will be deemed absolutely final. No revision of such a declaration will be allowed at a later period for any purpose whatever.

7. Every candidate must submit with his application non-judicial stamps of the value of Rs. 5 or a chalan showing payment into a Government treasury in Bengal of the sum of Rs. 5. No part of this fee will be returnable to any applicant, whatever the result of his application. Applications unaccompanied by the fee, or stamp with postage stamps, will be ignored.

1. Name in full and degree.

2. Postal address in full. (Any change of address should be at once communicated to the candidate's nominating authority.)

3. State your—

(*a*) exact date of birth.

(*b*) age last birthday.

4. State your—

(*a*) place of birth.

(*b*) permanent residence.

(*c*) home district.

5. State your—

(*a*) nationality at birth.

(*b*) religion.

(*c*) caste.

6. State your father's—

(*a*) name.

(*b*) place of birth.

(*c*) nationality at birth.

7. State your father's—

(*a*) postal address.

(*b*) profession (if dead, give last address).

8. State your mother's—

(*a*) place of birth.

(*b*) nationality at birth.

9. Name in order the schools attended since the age of 12, giving addresses with dates of entering and leaving.

10. State your age on finally quitting school.

11. (*a*) Name your University and College.

(*b*) Give the dates of entering and leaving.

(*c*) State any degrees, honours or prizes obtained, and the year of graduation.

(*d*) State the class in which you were placed in the case of a Master's degree or a Bachelor's degree with honours.

12. Give the name of the Vice-Chancellor or Principal or Professor who can vouch for your character.

13. If the time since leaving school is not fully accounted for by the replies given above, account for the remainder here with dates.

If you have been in employment at any time state the names and addresses of your employers.

14. Give the names, professions and present addresses (in full) of the two referees from whom you submit certificates as to your character and domicile.

15. (*a*) Are you free from pecuniary embrassments ?

(*b*) If you are under liability to repay money advanced by an institution or party for your education, state the particulars.

16. (*a*) Have you appeared at any previous examination for Government service ?

(*b*) If so, state –

(*i*) when ?

(*ii*) for what appointment ?

17. Have you applied for admission to any other examination (*e.g.*, Indian Audit and Accounts Service Examination, Railway Service Examination, etc.) during the year ?

18. (*a*) Have you previously been rejected for any appointment in Government service ?

(*b*) If so, state

(*i*) whether you were rejected on the result of a medical examination and, if so, on what occasions, you were rejected and for what service you were competing ;

(*ii*) if you were not rejected on the result of a medical examination, on what occasions you were rejected and for what reasons if known.

19. For which service do you desire to compete. If for more than one, state the order of your preference.

Signature .....

Date .....

Declaration of choice of subjects for examination.

Place your initials against the subjects in which you wish to be examined if you are chosen for admission to the examination and state the language you choose for compulsory translation. A candidate having once made a declaration as to the optional subjects which he wishes to take up for examination will not be permitted, except for very special reasons, to alter his choice of subjects, and in no circumstances will any such application be considered which reaches the Director of Public Instruction after the 1st January 1937. Refer for guidance to the accompanyng syllabus :—

Initials.	Subjects.	Maximum marks.
..	(1) English Literature	300
..	(2) Mathematics	300
..	(3) Physics	300
..	(4) Chemistry	300
..	(5) Classical language	300
	(*a*) Latin.	
	(*b*) Greek.	
	(*c*) Sanskrit.	
	(*d*) Arabic.	
	(*e*) Persian.	
	(*f*) Pali	
	(*g*) Urdu (for those whose mother-tongue it is not).	
..	(6) History	300
..	(7) Philosophy	300
..	(8) Economics	300
..	(9) Botany	300
..	(10) Geology	300
..	(11) Physiology	300
..	(12) Zoology	300
..	(13) History of Islam	300
..	(14) Constitutional History of England and the Empire ..	150
..	(15) Ancient Indian History and Culture ..	150
..	(16) Political Theory and Political Organisation ..	150
..	(17) International Law	75
..	(18) Roman Law	75
..	(19) Jurisprudence and Principles of Legislation ..	75
..	(20) English Constitutional Law	75
..	(21) Hindu Law	75
..	(22) Muhammadan Law	75
..	(23) Anthropology	150
..	(24) Comparative Philology	150
..	(25) Bengali Language and Literature	150
..	(26) Commercial Law	75
..	(27) Statistics	75
..	(28) Geography	150

My ordinary spoken and written language is.....and the language which I wish to offer for compulsory translation is.....I took up.....as my vernacular at the University examinations.

Signature .....

Date .....

SCHEDULE II.

Statement showing the allotment of nomination for admission to the competitive examination for appointment to the Bengal Civil Service (Executive) and the Bengal Junior Civil Service.

(*a*) *For collegiate students.*

(1) Dacca University (representing the three Halls of the University.)	54
(2) Presidency College	47
(3) Scottish Churches College	25
(4) City College	12
(5) Rajshahi College	16
(6) St. Xavier's College	12
(7) Islamia College, Calcutta	18
(8) Krishnath College, Berhampore	6
(9) Ripon College	6
(10) St. Paul's College	6
(11) Braja Mohan College, Barisal	6
(12) Bangabasi College	6
(13) Vidyasagar College including Commerce Department	12
(14) Carmichael College, Rangpur	6
(15) Chittagong College	12
(16) Ananda Mohan College, Mymensingh	6
(17) Hooghly College	6
(18) Bankura College	4
(19) Ashutosh College	2
(20) Krishnagar College	4
(21) Victoria College (Comilla)	4
(22) Victoria College (Cooch Behar)	2
(23) Daulatpur Hindu Academy	2
(24) Sanskrit College	2
(25) Serampore College	2
(26) Rajendra College, Faridpur	2
(27) Prafulla Chandra College, Bagerhat	2
(28) Krishnachandra College, Hetampur	2
(29) Midnapore College	2
(30) Feni College	2
(31) Edward College, Pabna	2
(32) Burdwan Raj College	2

(*b*) *For non-collegiate and other students.*

(33) Calcutta University (for non-collegiate students)	16
(34) Director of Public Instruction, Bengal (for other students, *i.e.*, for Bengal students who graduated from Colleges outside Bengal) ..	4

SCHEDULE III.

Syllabus for the competitive examination for appointment to the Bengal Civil Service (Executive) and the Bengal Junior Civil Service.

I.—Compulsory subjects—	Maximum marks.
1. (*a*) Translation from English into Bengali, Hindi, Urdu, Nepali, French or German	100
(*b*) Translation from Bengali, Hindi, Urdu, Nepali, French or German into English	100
2. English Composition	200
3. Elementary Mathematics (chiefly problems)	200
4. General paper	200
Total	800

Students whose ordinary spoken and written language is not Bengali will be required to take up translation from one of the four Indian vernaculars mentioned above (*viz.*, Bengali, Hindi, Urdu, Nepali) into English and *vice versa*. Only those whose spoken and written language is Bengali are allowed to take up French or German in the compulsory subjects.

There will be one paper in each of the compulsory subjects. No candidate will be considered for an appointment unless he secures 33⅓ per cent. of the marks in each of the first two compulsory subjects, and if he fails to secure 25 per cent. of the marks in any of the other two compulsory subjects he will score no marks in that subject.

There will be a *viva-voce* test, the maximum marks for which will be 400, the minimum qualifying marks being 160. The test will be confined to the first fifty candidates who are successful at the written examination, and the marks awarded at the *viva-voce* test will be added to those secured at the written examination.

The examination will be in matters of general interest, not in matters of academic interest ; it is intended to test the candidate's alertness, intelligence, and general outlook.

II.—Optional subjects—		Maximum marks.
Any two or more of the following : provided that the total number of marks obtained under this head must not exceed 600		
1. English Literature		300
(*a*) General History of English Literature ..	150	
(*b*) English Literature from 1832 to the present day ..	150	
2. Mathematics		300
(*a*) Pure	150	
(*b*) Mixed	150	
3. Physics		300
(*a*) General, Heat, Light	150	
(*b*) Magnetism, Electricity	150	
4. Chemistry		300
(*a*) Inorganic	150	
(*b*) Organic	150	
5. One classical language chosen from Latin, Greek, Sanskrit, Arabic, Persian, Pali or Urdu (for those whose mother-tongue it is not)		300
(*a*) Translation	150	
(*b*) Language, Literature and Grammar ..	150	
6. History		300
(*a*) Indian	150	
(*b*) English and European	150	

		Maximum marks.
7.	Philosophy	300
	(*a*) Metaphysics and Ethics 150	
	(*b*) Psychology 150	
8.	Economics	300
	(*a*) Political Economy 150	
	(*b*) Economic History and application to India .. 150	
9.	Botany	300
	(*a*) and (*b*) Two papers .. .. .. 150 each.	
10.	Geology	300
	(*a*) and (*b*) Two papers .. .. .. 150 each.	
11.	Physiology	300
	(*a*) and (*b*) Two papers .. .. .. 150 each.	
12.	Zoology	300
	(*a*) and (*b*) Two papers .. .. .. 150 each.	
13.	History of Islam	300
	(*a*) General Islamic History 150	
	(*b*) Islamic Philosophy and Culture 150	
14.	Constitutional History of England and the Empire ..	150
15.	Ancient Indian History and Culture	150
16.	Political Theory and Political Organization ..	150
17.	Anthropology	150
18.	Comparative Philology	150
19.	Bengali Language and Literature	150
20.	Geography	150
21.	International Law	75
22.	Roman Law	75
23.	Jurisprudence and Principles of Legislation ..	75
24.	English Constitutional Law	75
25.	Hindu Law	75
26.	Muhammadan Law	75
27.	Commercial Law	75
28.	Statistics	75

(*i*) There will be two papers in each of the optional subjects 1-13 and one paper only in each of the remaining subjects. Candidates who select as their optional subjects Physics, Chemistry, Botany, Geology, Physiology or Zoology and have not produced evidence that they possess a degree in the subject or subjects selected will be required to pass a practical test. If they fail to satisfy the examiners in this test they will earn no marks in the whole subject.

(*ii*) If a candidate fails to secure 25 per cent. of the marks in any one of the optional subjects selected he shall score no marks in that subject.

(*iii*) In awarding marks in all the subjects the candidate's knowledge of English, as shown by the answers, will be taken into account.

(*iv*) Ten per cent. of the marks obtained in any paper will be subject to deduction for bad writing and untidiness.

(*v*) The following details may prove helpful to a candidate as indicating the standard and nature of the examination :—

I. COMPULSORY SUBJECTS.

1.—Translation and Retranslation.

The examination will be directed to test not the extent of the candidate's knowledge of any literature (English, Bengali, Hindi, Urdu, Nepali, French or German), but only facility in rendering from one language into another with reasonable accuracy and elegance. In the case of candidates whose ordinary written and spoken language is not Bengali and who did not take up Bengali as their vernacular at the University examinations the tests in this paper will be equivalent to the tests in the subject prescribed in the rules for the lower standard of the Departmental Examination in Bengali for Civil officers, and such candidates will after appointment and before confirmation be required to pass the Departmental Examination by the higher standard in Bengali.

2.—English Composition.

Questions will be set to test the candidate's power of writing clear and expressive English. They will include letter-writing on given subjects, the rapid summarisation of the subject matter of passages in prose of about 500-600 words in length and the detailed paraphrase of poetry.

The general standard of the subject matter will be that of the pass B.A. degree of an Indian University.

3.—Elementary Mathematics.

Vulgar and Decimal Fractions. Ratio and Proportion. Areas and Volumes of Simple Figures and Solids. Percentages. Simple Interest. Easy Factors. Simple Equations. Graphs of Simple Equations and of Sets of Data. Elementary Geometry of the Straight Line, Triangle and Circle.

The paper will consist largely of Problems with Arithmetical Data.

4.—General Paper.

Questions will be set on current topics, general history or similar subjects with which an educated candidate should be acquainted.

II.—OPTIONAL SUBJECTS.

1.—English Literature.

(*a*) General history of English literature. Questions will be set to test the candidates' knowledge of the more important works of the greater writers from (and including) Chaucer to the present day.

(*b*) English literature from 1832 to the present day. Candidates will be expected to know the work of the greater writers of the age, and to be able to understand such literature in relation to the main social and historical developments of the age.

Note.—In either paper, questions on the history of literary forms, style and prosody will not be excluded.

2.—Mathematics.

(a) Pure.

(*i*) *Algebra.*

Binomial theorem.

Convergency, divergency, and summation of series.

Variation.

Theory of limits.

Inequalities.

Continued fractions.

Determinants.

Elementary theory of equations including the approximate solution of numerical equations.

(*ii*) *Geometry.*

Geometry of the triangle, circle and conic sections.

Analytical Geometry of the straight line and conic sections.

Trigonometry : circular and hyperbolic functions : properties of triangles : summation of series : De Moivre's theorem : factorisation : expansion of the circular and hyperbolic functions in series.

Geometry of three dimensions : plane straight line : conicoids : generating lines of coincids : curvature of surfaces.

(iii) Differential and integral calculus.

Theory of limits : differentiation : maxima and minima : summation of series : partial differentiation : integration : definite integrals : reduction formulæ : differential equation of the first and second orders : Fourier's series ; applications to the geometry of curves.

(b) Mixed.

(i) Statics.

Statics of single particle.

Statics of systems of particles.

Friction.

Centre of mass.

Principle of virtual work.

Equilibrium of strings.

Machines.

(ii) Dynamics of a particle.

Velocity, acceleration, laws of motion.

Projectiles.

Impact.

Work and energy.

Motion of a particle in a plane under the influence of forces : orbits.

(iii) Hydrostatics.

Fluid pressure : centre of pressure on curved surfaces.

Conditions of equilibrium of a floating body.

Theory of the Metacentre.

Hydraulic and pneumatic machines.

(iv) Astronomy.

Elementary spherical trigonometry : refraction : parallax : precession : nutation : abberation : the sun and the moon : eclipses : measurement of time : the equation of time : determination of latitude and longitude : sextant : the principal instruments in an observatory : descriptive discussion of the principal constellations : comets : nebulas.

3.—Physics.

(a) General, Heat and Light.

(i) General Properties of Matter.

Gravitation, elasticity, viscosity, surface tension, Kinetic theory of gases.

(ii) Heat.

Thermometry, expansion, calorimetry, change of state, conduction, radiation, thermodynamics.

(iii) Light.

Reflection and refraction, dispersion and chromatic abberation, spherical abberation, optical instruments, velocity of light, the spectrum, interference, diffraction and polarisation.

(b) Magnetism and Electricity.

The electrostatic field, conduction, condensers, specific inductive capacity, magnetism permanent and induced, electric currents, magnetic force due to currents, electro-magnetic induction, electrolysis, heating effects, thermo electricity, discharge of electricity through gases, radio activity, structure of the atom.

(c) Practical.

The practical examination involves experimental work ranging over the above syllabus. The standard is indicated by the following text books :—

General Properties of matter	Poynting and Tomson.
Heat	
Light	Preston.
Magnetism and Electricity	J. J. Thomson.

4.—Chemistry.

(a), (b) and (c) Inorganic, Organic and Practical.

Kinetic Theory of Molecules and its applications ; Dalton's Atomic theory ; Atomic and molecular weights ; Structural Chemistry and Stereo-isomerism ; Periodic Law ; Radio activity and modern views regarding the constitutions of matter. Laws of true solution ; Colloidial solution ; Ionic theory and its applications. Conditions of Chemical equilibrium in a homogeneous and a heterogenous system ; Rate of chemical transformation ; Catalysis. Phase rule and its application to one and two component systems. Nature of energy and its transformation in Thermo Chemical and Electro Chemical reactions.

The common elements and their important compounds ; the inert gases ; complex inorganic amines and cyanides. Manufacture of the common industrial products—organic and inorganic—with special reference to Indian conditions. The following organic compounds and their simple derivatives :—methane and ethane ; ethylene and acetylene ; benzene, toluene, anthracene, pyridine and napthalene, methyl, ethyl and propyl, alcohol, ethyl acetoacetate and ethyl malonate ; lactic, oxalic, malonic, succinic, malic, tartaric, and citric acids ; fumaric and maleric acids, glycerol and urea. Chemistry of esters, ethers, amines, carbohydrates, cyanogen, derivatives, diazo, and Azocompounds. Application of catalysts and organometallic compounds in organic synthesis ; Composition, Purification and Analysis of organic compounds.

Qualitative analysis of a sample containing for inorganic radicals ; identification of a common organic compound ; simple gravimetric and volumetric estimation.

5.—Classical languages.

(i) Latin.

(a) Translation.

The paper shall consist of (*a*) passages for translation from Cicero or Caesar, and Virgil or Lucretius, (*b*) a passage or passages from one or more of the following—Livy, Tacitus, Horace, (*c*) a piece of English prose for translation into Latin. 150 marks of which 75 shall be given to (*c*).

(b) Language, Literature and Grammar.

The paper shall consist of questions on Accidence, Syntax, Latin philology and literature, Roman History, the geography and organisation of the Empire.

A choice of questions shall be allowed.

(ii) Greek.

(a) Translation.

The paper shall consist of (*a*) passages for translation from Homer and Demosthenes, (*b*) a passage or passages from one or more of the following—Thucydides (excluding speeches), Euripides (excluding choruses), Zenophon, Plato, (*c*) a piece of English prose for translation into Greek. 150 marks of which 75 shall be given to (*c*).

(*b*) *Language, Literature and Grammar.*

The papper shall consist of questions on Accidence, Syntax, the development of the literature in its chief forms, the contributions of the Greeks to the development of civilisation, history and geography.

A choice of questions shall be allowed.

(iii) Sanskrit.

(*a*) *Translation*, (*b*) *Language, Literature and Grammar.*

The object of the examination will be more to draw out what a candidate knows than to test his knowledge. It is not expected that he should be an expert or a specialist in any branch of Sanskrit Literature, but he should have a grasp of both the language and Literature, Vedic and Classical.

He should have a general knowledge of Sanskrit Grammar, Vedic and Classical. This knowledge will be tested not by asking him to quote rules, but by their application to language.

He will be required to translate easy passages in English from Vedic or Classical Sanskrit Literature, but not from commentaries. He may be asked to compose in Sanskrit, to write an essay in Sanskrit, to summarise a given passage in English or Sanskrit and to translate into either language.

(iv) Arabic.

(*a*) *Translation.*

(*i*) From English into Arabic and (*ii*) from Arabic into English.

(*b*) *Language, Literature and Grammar.*

Muhammadan civilisation including--

(*i*) History and (*ii*) Literature

(*i*) The outline of *Muhammadan History* from the beginning of Islam up to the fall of the Abbasides of Baghdad in the middle of 13th century A. D.

(*ii*) A general knowledge of the History of *Arabic Literature*. Grammar according to modern method and elements of Arabic Prosody and Rhetoric.

(v) Persian.

(*a*) *Translation.*

All translation will as far as practicable be from and into the present-day language of Iran.

(*b*) *Language, Literature and Grammar.*

Candidates must possess a fair knowledge of the general outlines of the literary history of Persia with special study of a particular period, *e.g.*, the Ghaznavi and Saljugi period, and first-hand knowledge of a few selected authors, such as Firdausi, Unsuri, Minuchihri, Anvari, Nasir-i-Khusran, Khyyam, etc. Questions on grammar shall demand from the candidates not mere cramming and reproduction from memory but intelligent practical application of the grammatical rules, requiring some discrimination.

(vi) Pali.

(*a*) *Translation.*

(*i*) Passages, prose and verse of moderate difficulty for translation from Pali into English

(*ii*) A passage of moderate difficulty for translation from English into Pali

(*b*) *Language, Literature and Grammar.*

1. Knowledge of literature will include—

(*i*) A knowledge of canonical literature and commentaries as well as literature outside the canon,

(*ii*) History of Buddhism from its rise to the 7th century A. D.,

(*iii*) Indian civilisation as depicted in the canonical Pali literature, and

(*iv*) Indian thought and ideals at the time of the rise of Buddhism.

2. The questions on language and grammar will include—

(*a*) Elementary knowledge of Sanskrit grammar ;

(*b*) Elementary knowledge of the principles of comparative philology ; and

(*c*) Knowledge of Indian inscriptions from the earliest times to the 2nd century A. D.

A fairly wide choice of questions will be given.

(vii) Urdu.

(*a*) *Translation.*

(*i*) From English into Urdu and (*ii*) from Urdu into English.

(*b*) *Language, Literature and Grammar.*

(*i*) A general knowledge of the history of Urdu language and literature.

(*ii*) Grammar according to modern method and elements of Urdu Prosody and Rhetoric.

6.—History.

(a) Indian History.

A knowledge of Ancient, Mediæval and Modern India will be required. The main stress will be laid on the period 1500-1920 A. D. Sketch historical maps will be required of candidates. A knowledge of political, military and economic history will be demanded as also of modern constitutional development. The broad outlines of religious and cultural history should be known ; also the history of foreign countries, so far as it directly affected the history of India.

(b) English and European History.

The main stress in this paper will be laid on English History, knowledge of European History being only required in so far as it more or less directly links up with English History. Chief importance will be attached to the period 1500-1920 A. D. Political, military, cultural, economic and constitutional history will also be required. Sketch maps will be essential. The growth and history of the British Empire should be known.

7.—Philosophy.

(a) Metaphysics and Ethics.

Definition and Province. Relation of Ethics and Metaphysics to cognate subjects. Methods of Metaphysics and Ethics. A *priori* and *a posteriori* Theories. Discussion of the principal Categories of knowledge. Relation of the Finite to the Infinite, the Conditioned to the Unconditioned, etc. The influence of Evolution on Metaphysical and Ethical Thought. Leading Theories of the Constitution of the World. Naturalism and Idealism. Theories of the nature of the Soul and its relation to the Body. The idea of the Self. The idea of God. Relation of God to the World and the Soul. Immanence and Transcendence, Agnosticism, Septicism, Pantheism, Theism, Immortality, Optimism and Pessimism.

The moral Consciousness, Postulates of Mortality, Human Freedom, Moral Obligation, Ethical Standards. Individual and Society. The Social Organism. Duties and Virtues. Theories of Punishment. The nature of Moral Progress.

(Candidates will be expected to possess a general knowledge of the history of Metaphysics and Ethics, both Eastern and Western, ancient and modern.)

(b) Psychology.

Scope and Province. Relation of Psychology to cognate subjects. Methods of Psychology. Varieties of Psychological Study. Relation of Mind to Body. Consciousness and Subconsciousness Suggestion. Mental processes. Sensation and its Organic Basis. Perception. Ideation. Memory and Imagination. Judgment. The Development of the Categories. Reasoning. Belief. The Growth of the Conception of the Self. The Various Selves. Feelings and Emotions. The Psychology of Will. Group Psychology. Social Psychology.

(Students are expected to possess a general knowledge of the history of Psychological Theory.)

8.—Economics.

(a) Political Economy ; (b) Economic History and application to India.

Political Economy.—This subject will include the Organization of Production; theories of Consumption, Value, Monopoly and Distribution ; the problems of Population, Labour and Industrial Peace ; the theories of Money, Prices, Credit and Banking ; the mechanism and theory of International Trade and Foreign Exchange ; the principles of Public Finance.

Candidates will be expected to show familiarity with the economic conditions and development of India, and to be able to apply the principles of Political Economy to Indian conditions.

They are also expected to have some knowledge of the industrial history of England.

9.—Botany.

(a) and (b) Theoretical Course.

Scope of Botany. Difference between plant and animal. Outlines of the modern systems of classification.

Vegetable cell. Cell contents, Cell division, Tissues and tissue systems.

Morphology (including histology) and Life history of Algæ (*chroococcus*, a desmid, *Spirogyra*, *Ulothrix*, *Vaucheria* and *Chara*), Fungi (Yeast, *Mucor*, *Peronospora*), Muscineæ (a moss plant, *Marchantia*), Pteridophyta (a fern, *Lycopodium Sellaginella* and *Equisetum*) and *Gymnospermia* (*Cycas-Pinus*).

General morphology, histology and life history of Angiosperms. Physiology of plants including the principal experiments. Outlines of the Ecology of plants with special reference to the conditions of Bengal.

Distribution of plants in time and space.

A knowledge of the systematic position, morphological characters, use and cultivation of the more common economical plants of Bengal (viz., rice and other cereals, pulses, common vegetables, fruit trees, sugar producing plants, jute, indigo, cotton and the common timber trees).

(c) Practical Course.

Knowledge of microtechnic including free hand section cutting for microscopical examination. Drawing of dissection of flowers and microscopical sections. Referring common plants of Bengal to their Natural orders. Identification of plants by analytical tables. Simple physiological experiments.

10.—Geology.

The examination in Geology shall consist of (*a*) and (*b*) two theoretical papers, and (*c*) one practical paper.

(*a*) and (*b*). The theoretical course shall consist of—

Dynamical and Structural Geology.

Geological function of Air, Water and Life. Earthquakes and volcanoes. Secular upheavals and subsidence. Different types of structures met with in the crust of the earth Earth sculpture. Origin of the Himalaya mountains. Water-supply.

Mineralogy and Petrology.

Physical and chemical characters of the more important minerals including their origin and commercial use. Classification of rocks. The leading rock-types of Building materials.

Palæontology and Historical Geology.

Use of fossils. Leading types of fossils. Principles of correlation. The standard stratigraphical scale. Characters and distribution of the series of rocks found in India.

(*c*) The practical examination shall include (*i*) the identification and description of rocks and minerals, (*ii*) the description of microscopic sections of rocks, (*iii*) the recognition of important genera of fossils and (*iv*) the drawing and interpretation of geological maps and sections.

11.—Physiology.

(a) and (b) Theoretical Course.

General Physiology.

1. The Cell-membrane, Physico-Chemical processes—diffusion, Osmosis and Dialysis, Osmotic-pressure, Electrolytes, Ionisation, Surface tension, Absorption. Properties of colloids, Catalysis and Endymeaction.

Chemical Pysiology.

2. Chemical composition of the body, Chemistry of carbohydrates, fats, liquids and proteins, Chemical Physiology of blood and lymph. Coagulation, Hæmolysis, Precipitins, Tests for blood. Immunity.

Histology.

3. Histology and development of the cell, Segmentation of ovum and formation of germinal membranes, Microscopical appearances of blood, lymph and milk. Minute structure of the various organs and tissues of the animal body.

Physiological Processes.

4. Physiology of contractile issues, functions of nerve-cells and nerve-fibres, the circulation of the blood, respiration, processes involved in digestion and absorption of food, metabolism, dietetics, vitamines, physiology of endocrine organs, harmones, excretion by the kidneys, skin, lungs and liver, production and regulation of body heat, mechanism of sound production, and speech, Physiology of the Central and Autonomic nervous systems, Special Physiology of the organs of sense and Pyhsiology of growth and reproduction.

(c) Practical Course.

I. The chemistry of carbohydrates, fats and proteins found in blood, milk and common food substances, chemistry of hæmoglobin and its principal derivatives. Uses of the Hæmoglobinometer and direct vision spectroscope, composition of bile, normal constitutents of urine and their estimation, more important abnormal constituents of Pathological urine and their estimation, Cryoscopy.

II. Histological technique involving the use of the microtone and methods of fixing, staining and mounting for the preparation of permanent specimens, minute anatomy of the various organs and tissues of the body, the use of Hæmacytometers.

III. Demonstration of the uses of the more important apparatus employed in Physiological investigation. A practical acquaintance with the methods of performing the following experiments :—

1. **Muscle and nerve.**—Myographic methods of demonstration of the contraction of muscle under various conditions. Tetanus. Fatigue. Works done by the contracting muscle. Conduction in a nerve. Velocity of nerve-impluse.

2. **Experiments on the frog's heart.**—Normal tracing of the heart beats. Modifications of the tracing by the application of heat and cold, drugs and stimulation of the vago-sympathetic trunk.

3. Sphygmographic tracing of the pulse. Determination of the blood pressure in man by means of Sphygmomanometers.

4. Experiments on reflex action in " Spinal " frog.

12. Zoology.

(a) and (b) Theoretical Course.

Scope of zoology and principles of classification.

Animal cell. Cell division Elementary tissues, their morphological differentiation and physiological division of labour. Principles of animal physiology.

General characters of the following groups (including the distinctive characters of the classes, the more important orders represented in Bengal and of the development of the groups marked X) ; Protozoa, Porifera X, Coelentera, Platyhelminthes X, Nemertinea, Nematoda, Rotifera, Annelida X, Arthropoda X, Mollusca X, Echinoderma X, Chordata, Hemichorda, Cephalochorda X, Urochorda X, Craniata-Cyclostomata, Pisces, Amphibia X, Reptilia, Aves X and Mammalia X.

Distribution of animals in time and space.

Theories of evolution. Heredity, variation and adaption. Cell in inheritance. Eugenics.

(c) Practical Course.

Knowledge of micro-technic, including section cutting by paraffin method, Microscopic examination and dissection of Amoeba, Paramoecium, Monocystis, Spongilla, Hydra, Irene, Pheretima, Palaemon, Periplanata, Amellidens, Ampullaria, a starfish, a sea-urchin, a holothurian, Amphioxus, Doliolum, an ascidian, an elasmobranch (or Rohu fish), Bufo, the house gecko, the fowl and Cavia.

13. History of Islam.

There will be two papers on this subject. The first paper will consist of two parts dealing with the History of Islam in India and the History of Islam outside India, respectively. Each part will carry a maximum of 75 marks. The second paper will deal with Islamic Philosophy and Culture and will carry 150 marks.

What the examinee will be expected to know is not the account of battles or history of intrigues, but a good knowledge of the social, political and economical conditions of the Islamic Empire and of the literary, philosophic and scientific activities of the muslims under the Caliphate. In this connection special attention should be paid to foreign and particularly Hellenistic influences on Islamic thought and culture. He will be further required to know the sources of information on his subject contemporary and modern and to estimate their relative importance as works of history. Stress will be laid on the manner and method in which the subject is approached and discussed. Nor will the style be reckoned as less important than the subject matter. The object of the examination will be not to test the memory of the examinee but his grasp of the subject, his power of thinking, his capacity for seizing on the essentials as opposed to non-essentials in a long, complicated narrative.

14. Constitutional History of England and the Empire.

In this paper the main stress will be laid on the period from 1600 A.D. onwards, but candidates will be expected to possess a knowledge of the main episodes of constitutional importance prior to that date. Candidates should also be acquainted with the history of the making of the constitutions of Australia, Canada, South Africa and India. Special knowledge of that of India will be required. The constitutional history of the United States of America, so far as it throws light on English Constitutional History, should be known.

15. Ancient Indian History and Culture.

1. The age of the Vedas, the Samhitas, the Brahmanas and the Sutras
2. Rise and development of Buddhism and Jainism.
3. Political history from the 7th century B.C. to the 12th Century A.D.
4. Administrative system and political theories.
5. Economic condition, including trade and maritime activity.
6. The social organisation of the Post-Vedic period, with special reference to the growth of the caste system.

Books recommended indicating the standard required.

1. Cambridge History of India, Vol. I, pages 1 318.
2. V. A. Smith Early History of India.
3. R. C. Dutt Civilization in Ancient India (omitting chapters on Political History).
4. Dr. P. N. Banerjee Public Administration in Ancient India.

16. Political Theory and Political Organisation.

Politics. This subject will include political theory and political organization. Candidates will be required to show a knowledge of the theory of the state, theories about the origin of the state, theories of law and sovereignty, citizenship, theories about state interference, the structure of Government, forms of Government and the ends of the state. A knowledge of the historical development of some of the more important theories will also be required.

Political organization will include a study of the details of the British constitution and the Indian constitution and the outlines of the constitutions of France, the United States, Germany, Canada, Australia, and South Africa. The history of institutions is not included, but candidates will be required to know the earlier stages from which existing Indian political institutions have directly developed.

17.—Anthropology.

Social.

Candidates will not be expected to have an extensive experience of laboratory and museum work. The subject will be treated with special, but not exclusive, reference to peoples of rude culture including pre-historic civilization.

Physical.

The subject includes pre-historic Archæology and Technology. Candidates will be expected to have such knowledge as may be acquired by laboratory and museum work consisting mainly in the handling and study of specimens and exhibits. The subject will be treated with special, but not exclusive, reference to peoples of rude culture including pre-historic civilization.

18.—Comparative Philology.

The subject shall include—

(*a*) the general principles of the Science of Language, including Elementary, General Phonetics, Families of speech, Evolution of Language in Phonetics, Inflections, Syntax and Meaning, the Evidence of Language in the History of Civilization and History of Philological Speculation.

(*b*) The Philology of one of the following languages to be selected at the option of the candidate :—

Sanskrit, Pali, Persian, Arabic, English, Bengali, Hindustani (Urdu or Hindi).

The paper will be in two parts with 75 marks for each.

19.—Bengali Language and Literature.

The candidate will be expected to possess a general knowledge of the history of development of the Bengali Language and Literature from the time of Chandidas down to the death of Bankim Chandra Chatterjee. The question will demand a first-hand acquaintance with the important works of each period within the above limits, and will include points of Grammar, Philology, Social and Political History, as well as literary criticism. The answers should be given in Bengali, the correctness of which will be taken into consideration in awarding credit.

20.—Geography.

Candidates may be asked to show their ability to draw neat and accurate maps.

A.—Geography of the World.

(1) Elementary Astronomy.

(2) Natural Phenomena—Wind, rain, etc., and their causes.

(3) Land and sea distribution. Main river and mountain systems of the world; their importance, political and economic.

(4) General Climatic Geography of the World.

(5) Main trade routes. Distribution of oil, coal, wheat, wool, cotton, rice, jute tracts.

B.—Geography of India.

(1) General description and Physical Geography.

(2) Relation of Geography to—

(*a*) Climate (with special reference to the monsoon currents).

(*b*) History of India.

(*c*) Economics. The main products of the country and their nature of transport and distribution. Railway and river systems.

(3) Influence of Geography on relations of India with—

(*i*) Neighbouring countries.

(*ii*) United Kingdom.

(4) Ethnographic Geography.

C.—Geography of Bengal.

River and railway system.

Natural products.

Ports.

Trade—Internal and External.

Climate.

21.—International Law.

Peace and War—With special reference to the Independent or Sovereign States, Dependent States, British Colonies and the Native States of India.

Sea and the Territorial waters; Nationals, Aliens and Domicile.

Nationality and nationalisation in India and the Colonies.

Criminal jurisdiction and extradition.

Jurisdiction of the High Court of Justice and the Foreign Courts.

The Peace Treaty, and

The League of Nations Covenants.

Legal relations as affected by war.

Duties of neutral states.

Contraband of war.

22.—Roman Law.

Historical sketch of the Roman Law down to Justinian

General knowledge of the subject with special reference to the law of persons,

Law relating to Real Rights.

Law of Obligations.

Law of Succession—both testamentary and intestate.

Criminal Law and Procedure.

Book recommended:

A Manual of Roman Private Law, by W. W. Buckland, Cambridge University Press, 1925.

23.—Jurisprudence and Principles of Legislation.

Jurisprudence—What it means: its growth as a science of positive law.

A general knowledge of the subject with special reference to

Law and Rights.

Private Law.

The application of law.

Principles of Legislation—with special reference to the Legislative Idealism in the 19th century.

The Rights of the Individual.

Principles of utility and the distribution of property.

Offences and Punishments.

Free Trade and Protection.

The Fundamental doctrines of Socialism—Aims and policy of the Socialists—Socialist views regarding Land and the Landlords, the Capital and Capitalists, Unemployment.

24. English Constitutional Law.

A general study of the subject with special reference to the Nature of Constitutional Law and its place in Jurisprudence.

Nature of Parliamentary Sovereignty.

House of Commons.

House of Lords.

Functions of the Crown in Parliament. Cabinet.

Right to Personal Freedom.

Right of Freedom of Discussion.

Right of Public Meeting.

Conventions of the Constitution.

25.—Hindu Law.

Candidates are required to have a general knowledge of the principles of law and of leading cases in, subjects covered by the following syllabus :—

1. Sources—Ancient and Modern sources. Legislation relating to Hindu Law. Schools of Law.

2. Marriage—Kinds of ; Capacity for marriage and prohibited degrees. Effect of marriage. Rights as between husband and wife.

3. Sonship—Legitimate and adoptive—Effect of illegitimacy—The law of adoption—Joint family, Mitakshara and Dayabhaga law. Partition. Impartible Estates.

4. Law of Inheritance according to the Mitakshara and Dayabhaga Schools.

5. Law of Wills—Hindu Wills Act—Probate and Administration Act—Hindu Disposition of Property Act. Trusts and Endowments. Private and Public Debuttor.

26.—Muhammadan Law (according to the Hanafi and Shiah Schools).

Candidates are required to have a general knowledge of the principles of law and of leading cases in subjects covered by the following syllabus :—

1. Sources. Schools of law. Custom in Muhammadan Law.

2. Marriage—Capacity for marriage—Prohibited relations—Forms of marriage—Essentials of marriage—Effect of marriage—Law of Dower—Divorce.

3. Sonship—Legitimacy—Kinship—Affinity and Fosterage.

4. Law of Inheritance.

5. Law of Gifts—*Donatio mortis causa*—Wakfs public and private—Wakf Validating Act.

27.—Commercial Law.

Arbitration ; Contracts ; Principal and Agent ; Partnership ; Limited Companies ; Guarantees ; Carriage by Land ; Carriage by Sea ; Insurance ; Sale of Goods ; Negotiable Instruments ; Bankruptcy.

28.—Statistics.

(1) Elementary theory of statistics, not depending mainly on the theory of probability nor requiring a knowledge of the calculus, frequency distributions, average percentiles, and simple methods of measuring dispersion, graphic methods ; elementary treatment of qualitative data, *e.g.*, investigation of association by comparison of ratios, consistency of data : the practice of the simplest graphic and algebraic methods of interpolation.

(2) The application of the more practical methods of statistics to the interpretation and analysis of Indian Statistics relating to population, trade, prices and wages.

(3) Elementary Mathematical Statistics including :—Forms of average and measures of dispersion. The normal curve, and methods of deriving other frequency curves. Theory of association, and co-relation for two variables. Theory of errors of sampling as applies to the above.

A wide choice of questions will be given so that a candidate without advanced mathematical knowledge can obtain full marks by answering questions under paragraphs (1) and (2).

POLITICAL DEPARTMENT.

Political.

NOTIFICATIONS.

Jalpaiguri. — No. 13426P. — 22nd August 1936.—In pursuance of sub-section (2) of section 28 of the Auxiliary Force Act, 1920 (XLIX of 1920), and in partial modification of Political Department notification No. 6110P., dated the 6th April 1936, the Governor in Council is pleased to appoint Mr. L. R. Faweus, I.C.S., to be a member of the Advisory Committee for the Jalpaiguri Military area, *vice* Mr. F. W. Robertson, C.I.E., I.C.S., proceeded on leave. He will hold office up to the 31st March 1937.

Calcutta.—No. 13495P.—22nd August 1936.—In exercise of the power conferred by section 7, sub-section (7) of the Cinematograph Act, 1918 (II of 1918), the Governor in Council is pleased to appoint the following persons to be members of the Bengal Board of Censors constituted by notification No. 4798P., dated the 16th April 1920, published in the *Calcutta Gazette* of the 21st idem. With the exception of the President, they shall hold office from the 1st September 1936 to the 31st August 1937:—

Members of the Board.

The Commissioner of Police, Calcutta, President (*ex-officio*).

Mr. H. R. Norton, M.L.C.

Mr. A. B. Mallett.

Mr. C. H. Pratt.

Mr. J. M. Sen, Assistant Director of Public Instruction, Bengal.

The Vice-Chancellor, Calcutta University (*ex-officio*).

Khan Bahadur A. F. M. Abdur Rahman, M.L.C.

Mr. H. S. Suhrawardy, Bar-at-Law, M.L.C.

Mrs. H. G. Cooper.

Mrs. N. C. Sen.

The Staff Captain, Presidency and Assam District, Fort William, Calcutta (*ex-officio*).

The Deputy Commissioner of Police, Headquarters, Calcutta, shall be *ex-officio* Secretary of the Board.

Bankura.—No. 13518P.—24th August 1936.—In exercise of the power conferred by section 24 of the Bengal Suppression of Terrorist Outrages Act, 1932 (Ben. Act XII of 1932), the Governor in Council is pleased to invest Babu Kumud Kumar Banarji, Deputy Magistrate, Bankura, with the powers of a Special Magistrate under the said Act.

G. P. HOGG,
Chief Secy. to the Govt. of Bengal.

POLICE DEPARTMENT.

NOTIFICATION.

No. 3705Pl.—20th August 1936.—In exercise of the power conferred by section 101 of the Bengal Village Self-Government Act, 1919 (Bengal Act V of 1919), the Governor in Council is pleased to make the following amendments in the rules published under notification No. 2197P.J., dated the 21st May 1920, regarding the control, appointment, discipline, etc., of dafadars and chaukidars:—

Amendments.

1. After the word "register" in last sentence of rule 5A in part III of the said rules as amended by notification No. 3866Pl., dated 20th August 1932, *insert* the words "in the following form".

2. *Insert* the following form below rule 5A in part III of the said rules:—

Name of suspect— Mahalla—

Father's name— Chaukidar—

Village—

1 Date and hour of visit.	2 By whom visited.	3 Whether found absent.	4 Remarks.

Note 1.—A separate page should be allotted to each suspect or surveillee so that there may be a self-contained record in respect of each such person.

Note 2.—The reason of absence is not to be entered by the President in the remarks column.

G. P. HOGG,
Chief Secy. to the Govt. of Bengal.

Orders by the Inspector-General of Police, Bengal.

Calcutta.—No. 8762F.—15th August 1936.—**Murshidabad-Darjeeling.**—Mr. C. W. Marshall, Armed Inspector, Murshidabad, is temporarily transferred to Darjeeling to fill the appointment sanctioned in G. O. No. 8952P., dated the 15th July 1916, for duty at the Government House there.

The transfer is sanctioned in the interests of public service.

No. 8774A.—15th August 1936.—**Calcutta-24-Parganas.**—Maulvi Mumtazuddin Talukdar, Inspector, Criminal Investigation Department, is transferred to the 24-Parganas in exchange with Maulvi Abdur Rauf, Inspector of that district.

The transfers are sanctioned in the interests of public service.

No. 9134A.—21st August 1936.—**Dacca-Murshidabad-Darjeeling.**—Sergeant G. Haywood of Dacca is appointed to act as Armed Inspector, Murshidabad, *vice* Mr. C. W. Marshall, Inspector, temporarily transferred to Darjeeling to fill an appointment sanctioned in G. O. No. 8952P., dated the 15th July 1916.

The transfer is sanctioned in the interests of public service.

J. C. FARMER,
Inspector-General of Police (offg.).

Bengal Board of Censors.

NOTIFICATION.

No. 8 C.B.—18th August 1936.—It is published for general information that the Bengal Board of Censors have allowed public exhibition of the revised version of the film "Captain of the Guard (syn.)", produced by the Universal Pictures Corporation, as passed by the Bombay Board of Film Censors under certificate No. 16285, dated 5th June 1936.

E. HODSON,
Secy., Bengal Board of Censors.

JUDICIAL DEPARTMENT.

Appointments and Transfers.

Jalpaiguri.—No. 6328J.—19th August 1936.—The orders contained in this department notification No. 3551 J., dated the 17th April 1935, published on page 739, Part I of the *Calcutta Gazette* of the 25th April 1935 appointing Babu Dhan Singh Lal Agarwala as an Honorary Magistrate of the Sadar bench in the district of Jalpaiguri for three years from the 17th April 1935, are hereby cancelled.

24-Parganas.—No. 6347J.—20th August 1936.—In exercise of the powers conferred by sections 14 and 15 and the proviso to section 357 of the Code of Criminal Procedure, 1898 (Act V of 1898), the Governor in Council is pleased—

(*a*) to confer upon Satya Kinkar Sarkar the powers of a Magistrate of the third class, in the district of the 24-Parganas, for a period of three years from the date of this notification,

(*b*) to direct him to sit as a member of the Kanchrapara bench in the said district, and

(*c*) to direct him to take down evidence in the English language.

24-Parganas.—No. 6389J.—21st August 1936.—In exercise of the powers conferred by sections 14 and 15 and the proviso to section 357 of the Code of Criminal Procedure, 1898 (Act V of 1898), the Governor in Council is pleased—

(*a*) to confer upon Rai Sahib Surendra Nath Ghosh the powers of a Magistrate of the second class, in the district of the 24-Parganas, for a period of three years from the 2nd September 1936, in respect to such cases as may be made over to him within the limits of the Barasat subdivision of the said district,

(*b*) to direct that he shall, in addition to sitting singly, sit as a member of the Barasat bench in the said district, and

(*c*) to direct him to take down evidence in the English language.

24-Parganas.—No. 6418J.—22nd August 1936.—In exercise of the powers conferred by sections 14 and 15 of the Code of Criminal Procedure, 1898 (Act V of 1898), the Governor in Council is pleased—

(*a*) to confer upon Babu Satish Chandra Banarji the powers of a Magistrate of the second class, in the district of the 24-Parganas for a period of three years from the 24th August 1936, in respect to such cases as may be made over to him within the limits of the Sadar subdivision of the said district, and

(*b*) to direct that he shall, in addition to sitting singly, sit as a member of the Baruipur bench in the said district.

Calcutta.—No. 6434J.—24th August 1936.—The following candidates are appointed on probation to the Bengal Civil Service (Judicial) as Munsifs with effect from the 10th August 1936, the date on which they reported themselves to the Principal, Bengal Engineering College, Sibpur, for training in Survey:—

(1) Babu Arun Kumar Das, M.A., B.L., son of Babu Kunja Bihari Das.

(2) Maulvi Jafar Ahmad, M.A., B.L., son of Maulvi Khalilur Rahman Chowdhury.

ERRATUM.

No. 6359J.—20th August 1936.—In paragraph (*a*) of the notification No. 5471J., dated the 14th July 1936, published at page 1752, Part I of the *Calcutta Gazette*, dated the 23rd July 1936, *substitute* "Rai Sahib" in place of "Babu" and "second class" in place of "third class".

Leave.

Calcutta.—No. 6313J.—19th August 1936.—Mr. N. A. Khundkar, Barrister-at-Law, Deputy Superintendent and Remembrancer of Legal Affairs, Bengal, is allowed leave on average pay for the period from the 3rd September 1936 to the 4th December 1936, provided the leave is spent elsewhere than in India, Ceylon or Nepal, under the proviso to Fundamental Rule 81(*b*)(*ii*) read with Fundamental Rule 99.

NOTIFICATIONS.

Bogra.—No. 6356J.—20th August 1936.—In exercise of the power conferred by section 65 of the Bengal Village Self-Government Act, 1919 (Bengal Act V of 1919), the Governor in Council is pleased to appoint Munshi Md. Moyenuddin Pramanik, a member of the Hatsherpur union board within the Sariakandi police-station in the Sadar subdivision of the Bogra district, to be, during his term of office as such member, a member of the union bench within the jurisdiction of the said union board for the purposes of that section.

Bogra.—No. 6357J.—20th August 1936.—In exercise of the power conferred by section 73 of the Bengal Village Self-Government Act, 1919 (Bengal Act V of 1919), the Governor in Council is pleased to appoint Munshi Md. Moyenuddin Pramanik, a member of the Hatsherpur union board within the Sariakandi police-station in the Sadar subdivision of the Bogra district, to be, during his term of office as such member, a member of the union court within the jurisdiction of the said union board for the purposes of that section.

Howrah.—No. 6420J.—22nd August 1936.—In exercise of the power conferred by section 73 of the Bengal Village Self-Government Act, 1919 (Bengal Act V of 1919), the Governor in Council is pleased to appoint Munshi Ulfat Hossain, a member of the Bankra union board within the Domjur police-station in the Sadar subdivision of the Howrah district, to be, during his term of office as such member, a member of the union court within the jurisdiction of the said union board for the purposes of that section, *vice* Munshi Sadiduddin Laskar, deceased.

Howrah.—No. 6421J.—22nd August 1936.—In exercise of the power conferred by section 65 of the Bengal Village Self-Government Act, 1919 (Bengal Act V of 1919), the Governor in Council is pleased to appoint Munshi Ulfat Hossain, a member of the Bankra union board within the Domjur police-station in the Sadar subdivision of the Howrah district, to be, during his term of office as such member, a member of the union bench within the jurisdiction of the said union board for the purposes of that section, *vice* Munshi Sadiduddin Laskar, deceased.

Bogra.—No. 6423J.—22nd August 1936.—In exercise of the power conferred by section 65 of the Bengal Village Self-Government Act, 1919 (Bengal Act V of 1919), the Governor in Council is pleased to appoint the following members of the union boards mentioned below, to be, during their term of office as such members, union benches within the jurisdiction of the union boards of which they are, respectively, members for the purposes of that section:—

Bogra district.

Bogra police-station.

Namuja union board.

Munshi Amanuddin Talukdar.
Munshi Kherajuddin Ahmed.
Munshi Joyenuddin Talukdar.
Babu Hemanta Kumar Nandi.

Shibganj police-station.

Majihatta union board.

Munshi Najibulla Pramanik.
Babu Binoy Krishna Deb.
Dr. Alimulla Sarkar.
Munshi Maminuddin Ahmed.

2. This notification will take effect from the date of the first meeting of the reconstituted union boards at which a quorum is present.

Bogra.—No. 6424J.—22nd August 1936.—In exercise of the power conferred by section 73 of the Bengal Village Self-Government Act, 1919 (Bengal Act V of 1919), the Governor in Council is pleased to appoint the following members of the union boards mentioned below, to be, during their term of office as such members, union courts within the jurisdiction of the union boards of which they are, respectively, members for the purposes of that section:—

Bogra district.

Bogra police-station.

Namuja union board.

Munshi Amanuddin Talukdar.
Munshi Kherajuddin Ahmed.
Munshi Joyenuddin Talukdar.
Babu Hemanta Kumar Nandi.

Shibganj police-station.

Majihatta union board.

Munshi Najibulla Pramanik.
Babu Binoy Krishna Deb.
Dr. Alimulla Sarkar.
Munshi Maminuddin Ahmed.

2. This notification will take effect from the date of the first meeting of the reconstituted union boards at which a quorum is present.

T. ROXBURGH.
Secy. to the Govt. of Bengal (offg.).

LOCAL SELF-GOVERNMENT DEPARTMENT.

NOTIFICATIONS.

Minister-in-charge: The Hon'ble Sir Bijoy Prasad Singh Roy, Kt.

Noakhali.—No. 6528L.S.-G.—22nd August 1936.—In exercise of the power conferred by section 5 of the Bengal Village Self-Government Act, 1919 (Bengal Act V of 1919), and after consideration of the views of Noakhali district board and the Sadar local board, the Government of Bengal (Ministry of Local Self-Government) are pleased to direct that each of the following local areas in police-station Sandip in the Sadar subdivision of the district of Noakhali shall be declared a union for the purposes of the Act.

2. In exercise of the power conferred by sub-section (*1*) of section 6 of the said Act, the Government of Bengal (Ministry of Local Self-Government) are pleased to establish a union board for each of the unions hereby declared and to fix nine as the number of members of each union board.

3. In exercise of the power conferred by sub-section (*3*) of section 6 of the said Act, the Government of Bengal (Ministry of Local Self-Government) are pleased to direct that one-third of the members of each of the said union boards shall be appointed by the District Magistrate on the grounds that such appointment is necessary for the due representation of minorities and of different interests within the union.

4. This cancels so much of notification No. 1129 L. S.-G., dated the 3rd April 1928, as relates to the establishment of the Harishpur union under Sandwip police-station and takes effect from the date on which the next reconstitution of the board falls due.

Name of district board—Noakhali.

Name of local board—Noakhali (Sadar).

Name of thana—Sandwip.

Name of mauzas constituting the union with their number in the jurisdiction list.

Sandwip union.

Harishpur (part)	...	43

Harishpur union.

Muktarpur	...	26
Rohini	...	27
Ijjatpur	...	28
Mahammadpur	...	29
Srirampur	...	31
Harishpur (part)	...	43

Hooghly.—No. 6330M.—17th August 1936.—In exercise of the power conferred by section 58 (*2*) of the Bengal Municipal Act, 1932 (Bengal Act XV of 1932), the Government of Bengal (Ministry of Local Self-Government) are pleased to appoint the Subdivisional Officer of Serampore to be a Commissioner of the Kotrung Municipality, in the district of Hooghly, *vice* Babu Anil Kumar Dutta, resigned.

No. 6400L.S.-G.—18th August 1936.—In exercise of the powers conferred by clauses (*i*) and (*t*) of section 138 of the Bengal Local Self-Government Act of 1885 (Bengal Act III of 1885), the Government of Bengal (Ministry of Local Self-Government) are pleased to make the following amendments in the rules published with notification No. 2158L.S.-G., dated the 5th September 1918, as subsequently amended:—

Amendments.

1. For the last sentence of rule 221 of the said rules *substitute* the following:—

"Every entry in columns 1 to 6 of the register shall be attested by the Chairman, Vice-Chairman or Secretary as soon as the register is opened."

2. At the end of rule 222 of the said rules *add* the following:—

"The Chairman, Vice-Chairman or Secretary shall at the end of each month check the entries in column "amount" with the sanctioned pay in column 6 and with those in the establishment bills and shall initial at the bottom of each month in token of correctness."

Calcutta.—No. 6416M.—18th August 1936.—In exercise of the power conferred by sub-section (*3*) read with sub-section (*4*) of section 72 of the Calcutta Improvement Act, 1911 (Bengal Act V of 1911), the Government of Bengal (Ministry of Local Self-Government) are pleased to re-appoint Mr. D. C. Ghose, Barrister-at-Law, with effect from the 21st September 1936 to be President of the Tribunal constituted under the said section, for the purpose of performing the functions of the Court in reference to the acquisition of land for the Board of Trustees for the Improvement of Calcutta, under the Land Acquisition Act, 1894.

Calcutta.—No. 6420M.—18th August 1936.—In exercise of the power conferred by sub-section (*3*) read with sub-section (*4*) of section 72 of the Calcutta Improvement Act, 1911 (Bengal Act V of 1911), the Government of Bengal (Ministry of Local Self-Government) are pleased to re-appoint Mr. Razaur Rahman Khan, B.L., with effect from the 21st September 1936 to be an Assessor of the Tribunal constituted under the said section, for the purpose of performing the functions of the Court in reference to the acquisition of land for the Board of Trustees for the Improvement of Calcutta under the Land Acquisition Act, 1894.

24-Parganas. — No. 6408M. – 18th August 1936.—The following draft of by-laws, which has been framed by the Commissioners of the Bhatpara Municipality, in the district of the 24-Parganas, under section 375(*a*) of the Bengal Municipal Act, 1932 (Bengal Act XV of 1932), and which the Government of Bengal (Ministry of Local Self-Government) propose to confirm under section 506 of the Act, is published for the information of persons likely to be affected thereby.

2. The draft will be taken into consideration on the 20th November 1936, and any objection or suggestion received by the undersigned through the District Magistrate and the Divisional Commissioner before that date will be duly considered:—

Draft by-laws.

1.—By-laws under clause (a) of section 375 of the Bengal Municipal Act, 1932, for the regulation of conduct of business in places used for the purposes mentioned in clauses (i) (ii) and (v) of sub-section (1) of section 370.

1. The licensee shall connect all drains in the place licensed under section 370 intended for the discharge of foul water with a municipal sewer, and the licensee shall not allow any foul water or refuse matter from such place to be discharged into a river, or channel, or any other reservoir of water intended for bathing, drinking or any other domestic purpose.

2. Where there is no sewer, the licensee shall collect the waste water from a place licensed under section 370 in properly constructed cesspools. Such cesspools shall be periodically cleansed or treated by the licensee in such a way as to render them inoffensive by activated sludge process or the contents thereof shall be otherwise disposed of in such manner as may be required by the Sanitary Inspector, Health Officer, or Chairman.

3. The licensee shall arrange for sufficient supply of water for cleansing the place licensed under section 370.

4. The licensee shall not cause or suffer any skin or hide which by reason of decomposition has become useless for the purpose of leather dressing, to be kept for a longer time than may be necessary in any part of the place licensed under section 370.

5. The licensee shall, at the close of every working day, cause every floor or pavement in the place licensed under section 370 to be thoroughly swept and washed. He shall, at the same time, cause all filth or refuse deposited on the floor or pavement of such place to be collected in suitable vessels or receptacles furnished with closely fitting covers and to be forthwith removed therein from the place.

6. The licensee shall cause the supply of water in every tank or other receptacle used upon the place licensed under section 370 for the washing or soaking of any skin or hide and not being a liming pit to be renewed as often as may be necessary to prevent the emission of noxious or injurious effluvia from the contents of the tank or other receptacles.

He shall cause every such tank or other receptacle to be furnished with a suitable cover and to be kept covered unless it is required to be kept open.

He shall cause every part of the tank or other receptacle, when emptied, to be thoroughly cleansed and shall cause all filth which has been removed therefrom to be forthwith conveyed from the place licensed under section 370 in suitable vessels or receptacles furnished with closely fitting covers, for disposal in a manner approved by the Commissioners.

7. The licensee shall cause all waste lime which has been taken out of any pit upon the place licensed under section 370 to be forthwith deposited in suitable vessels or receptacles or in a properly constructed cart or carriage which, when filled or loaded, shall be covered in such a manner as to prevent the emission of noxious or injurious effluvia from the contents thereof, and shall with all reasonable despatch be removed from the said place for deposit in a place fixed by the Commissioners or disposal in a manner approved by the Commissioners.

8. The licensee shall cause every beam, table, bench, knife, hammer or other implement or apparatus used upon the place licensed under section 370 for the purpose of unhairing, fleshing, breaking, scrapping, rounding, scudding or stocking any hide, butt or pelt or in any other process of his trade, to be cleansed from time to time as often as may be necessary to prevent any accumulation of filth upon the beam, table, bench, knife, hammer, implement, or apparatus.

9. The licensee shall cause all filth which has been splashed upon any part of the internal surface of any wall of any building upon the place licensed under section 370 to be removed by scraping or by some other effectual means of cleansing at least twice in every year, that is to say, at least once during each of the periods between the first and twenty-first day of March and the first and twenty-first day of September. He shall at the same time cause every part of the internal surface above the floor or pavement of the building to be thoroughly washed with hot limewash:

Provided (*i*) that the foregoing requirements as to limewashing shall not apply to any part of the internal surface of any building which is painted or covered with impervious material and may be otherwise properly cleansed and (*ii*) that this by-law shall not apply to any part of any such building which is used only for the storage of dry leather.

10. The licensee shall cause any part of the internal surface of the walls of any building and every floor or pavement upon the place licensed under section 370 to be kept at all times in good order and repair so as to prevent the absorption therein of any liquid filth or refuse or any noxious or injurious matter which may be splashed or may fall or be deposited thereon.

11. The licensee shall cause every part of the interior and exterior of every tub or other vessel or receptacle used upon the place licensed under section 370 to hold a solution of the material known as "puer" to be thoroughly cleansed by scrubbing or by some other effectual means once at least in every week.

12. In a place licensed under section 370 in which the fleshing meat is dried for subsequent sale for the manufacture of such articles as glue or jujubes, the licensee shall cover the drying area by wire netting so as to prevent carrion birds from carrying away the material and dropping it in the vicinity of inhabited areas.

13. A breach of any of the provisions of by-laws 1 to 12 shall be punishable with fine which may extend to fifty rupees and when the breach is a continuing one, with a further fine which may extend to five rupees for every day after the date of first conviction during which the offender is proved to have persisted in the offence.

II.—By-laws under clause (a) of section 375 of the Bengal Municipal Act, 1932, for the regulation of conduct of business in places used for the purposes mentioned in clauses (iii), (iv), (vi) and (vii) of sub-section (1) of section 370.

1. The licensee shall not use or allow to be used any portion of a place licensed under section 370, for residential or sleeping purposes, nor shall use or allow to be used any room within a building, in such place as a living or sleeping room, unless it is separated from the remaining portion of the said place by a substantial wall and contains a window opening directly to the sky and of dimensions not less than one-tenth of the superficial area of the room.

2. The licensee shall not employ any person suffering from any contagious or infectious disease at the place licensed under section 370.

3. The licensee shall store all materials which have been received on the place licensed under section 370 and which are not required for immediate use in the trade in such a manner and in such a condition as to prevent the emission of noxious or injurious effluvia therefrom.

4. The licensee shall thoroughly cleanse and wash at the close of every working day all floors or pavements in the place licensed under section 370 and shall collect all fragments of gut or other matter detached in the process of scraping and all garbage, filth or other offensive matter and place them in suitable vessels or receptacles to be forthwith removed with their covers affixed from the said place to a safe place of disposal appointed by the Commissioners or to be disposed of in a manner approved by the Commissioners. Each such vessel shall be constructed of galvanised iron or of some other non-absorbent material and furnish with a closely fitted cover and shall contain a sufficient quantity of a deodorant solution.

5. The licensee shall at the close of every working day thoroughly cleanse with water containing a deodorant every bench, table, tub, vessel, utensil or implement which has been in use during the day in the place licensed under section 370.

6. The licensee shall at the close of every working day remove by scraping or other effectual means all filth or refuse which has been splashed upon any inside portion of the place licensed under section 370.

7. The licensee shall keep every vessel or receptacle in a place licensed under section 370 thoroughly clean even when such vessel or receptacle is not in use.

8. The licensee shall adopt the best practicable means for rendering innocuous all gas or vapour emitted during any trade process either from the articles operated upon or from the contents of any cask, tank, vat, pan, trough or other receptacle upon the place licensed under section 370.

9. The licensee shall thoroughly wash within each first ten days of March, June, September and December of every year the interior of the place licensed under section 370 above the floor or pavement with hot limewash if such place has been in use since the last occasion on which it was so washed:

Provided that this by-law shall not apply to any part of such place as is covered with impervious material, in which case it shall be sufficient thoroughly to cleanse the same by washing with water.

10. The licensee shall not allow facility for the absorption of any liquid filth, refuse or other noxious or injurious matter in the interior of a place licensed under section 370 by reason of want of repair to the surface thereof.

11. The licensee shall adopt all appliances or means which the Commissioners may from time to time require for the purpose of preventing, abating, or minimising any nuisance or annoyance to the neighbourhood or to the public from the use to which a place licensed under section 370 is put and shall at all times maintain them in good and efficient order.

12. The licensee shall trap and connect the drains in a place licensed under section 370 with sewers with the consent of the Commissioners. Where there are no sewers or where permission to connect drains with the existing sewers has been refused by the Commissioners the licensee shall collect waste water from such place in properly constructed cesspools. These should be periodically cleansed and the contents thereof treated in a manner to render them inoffensive or in such other way as the Commissioners may require before disposal in the way recommended by them.

13. A breach of any of the provisions of by-laws 1 to 12 shall be punishable with fine which may extend to fifty rupees and when the breach is a continuing one, with a further fine which may extend to five rupees for every day after the date of the first conviction during which the offender is proved to have persisted in the offence.

III.—By-laws under clause (a) of section 375 of the Bengal Municipal Act, 1932, for the regulation of conduct of business in places used for dyeing mentioned in clause (viii) of sub-section (1) of section 370.

1. The licensee shall not use any part of a place licensed under section 370 for residential or sleeping purposes, nor shall use any room within a building in such place as a living or sleeping room, unless it is separated from the remaining portion of such place by a substantial wall and contains a window opening directly to the sky and of dimensions not less than one-tenth of the superficial area of the room.

2. The licensee shall not employ any person suffering from any contagious or infectious disease on a place licensed under section 370.

3. The licensee shall store all materials which have been received on the place licensed under section 370 and which are not required for immediate use in the trade in such a manner and in such a condition as to prevent the emission of noxious or injurious effluvia therefrom.

4. The licensee shall thoroughly cleanse and wash at the close of every working day all floors or pavements in the place licensed under section 370 and shall collect all residual waste or other offensive matter and place them in suitable vessels or receptacles to be forthwith removed, with their covers affixed, from the said place to a place of disposal appointed by the Commissioners or to any safe place for deposit, wherefrom the same shall subsequently be removed by the Commissioners for disposal.

5. The licensee shall adopt the best practical means for rendering innocuous all vapour emitted during any trade process either from the articles operated upon or from the contents of any cask, tank, vat, pan or other receptacles upon the place licensed under section 370.

6. The licensee shall keep at all times all floors and pavements in a place licensed under section 370 in good order and repair so as to prevent the absorption of any liquid filth or refuse or any noxious or injurious matter which may fall or be deposited thereon.

7. The licensee shall keep the dyeing ground and all the ground surface of the place licensed under section 370 smooth and free from hollows or inequalities so as to prevent any accumulation thereon of any liquid filth or refuse.

8. The licensee shall maintain at all times every drain or means of drainage upon or in connection with the place licensed under section 370 in good order and efficient condition. The licensee shall trap and connect drains of dyeing houses in the said place with sewers with the consent of the Commissioners. Where there are no sewers or where the permission to connect drains with the existing sewers has been refused by the Commissioners, the licensee shall collect the waste water from such place in properly constructed cesspools. These should be periodically cleansed and the contents thereof treated in a manner to render them inoffensive or in such other way as the Commissioners may require before disposal in the way recommended by them.

9. The licensee shall provide air-tight lids or covers for every tank, cask or other receptacle, whether in daily use or not, kept for the purpose of dyeing in a place licensed under section 370. All such receptacles should be covered with air-tight lids overnight so that mosquitoes may not have the chance of gaining entrance into the receptacles.

10. Whenever dyeing is temporarily suspended the licensee shall fill all unused pots in a place licensed under section 370 with sand and shall cover them with mull or gauze tied tightly round their necks to prevent mosquito breeding in them during the period of such suspension

11. The licensee shall keep every vessel or receptacle in a place licensed under section 370 thoroughly clean even when such vessel or receptacle is not in use.

12. The licensee shall thoroughly wash within each first ten days of March, June, September and December of every year the interior of the place licensed under section 370 above the floor or pavement with hot limewash if such place has been in use since the last occasion on which it was so washed:

Provided that this by-law shall not apply to any part of such place as is covered with impervious material, in which case it shall be sufficient thoroughly to cleanse the same by washing with water

13. The licensee shall adopt all appliances or means which the Commissioners may from time to time require for the purpose of preventing, abating, or minimising any nuisance or annoyance to the neighbourhood or to the public from the use to which a place licensed under section 370 is put, and shall at all times maintain them in good and efficient order.

14. A breach of any of the provisions of by-laws 1 to 13 shall be punishable with fine which may extend to fifty rupees and, when the breach is a continuing one, with a further fine which may extend to five rupees, for every day after the date of the first conviction, during which the offender is proved to have persisted in the offence.

IV.—By-laws under clause (a) of section 375 of the Bengal Municipal Act, 1932, for the regulation of conduct of business in places used for the purposes mentioned in clause (ix) of sub-section (1) of section 370.

1. The licensee shall see that a place licensed under clause (*ix*) of sub-section (*1*) of section 370 has sufficient room therein for the loading or unloading of materials.

2. A breach of any of the provisions of the by-law shall be punishable with a fine which may extend to fifty rupees, and when the breach is a continuing one, with a further fine which may extend to five rupees for every day after the date of the first conviction during which the offender is proved to have persisted in the offence.

Executive Instructions.

1. Any license granted under clause (*ix*) of section 370(1) may impose such conditions as in the opinion of the Commissioners appear necessary for the safety or convenience of the public or any portion of the public.

2. Every application for the grant of a license under these by-laws shall contain full particulars of the situation and boundary of the place for which the license is required and of the materials for which the license is required. An application for renewal shall be accompanied by the license to be renewed.

V.—By-laws under clause (a) of section 375 of the Bengal Municipal Act, 1932, for the regulation of conduct of business in places used for the purposes mentioned in clause (xi) of sub-section (1) of section 370.

1. The licensee shall not store in any place licensed under clause (*xi*) of sub-section (1) of section 370 kerosine, petroleum, naphtha, or any inflammable oil or spirit in excess of the following quantities, namely:—

Petroleum.—Maximum quantity 12 gallons; provided that petroleum is contained in closed tins, drums or bottles.

Naphtha.—Maximum quantity 1 quart.

Spirit.—Maximum quantity 2 gallons.

Other inflammable oil.—Such quantities as the Commissioners may from time to time prescribe; provided that such quantity shall not be in excess of the quantity prescribed under the Indian Petroleum Act, 1899.

2. The licensee shall not store other goods of a combustible nature in a place licensed under clause (*xi*) of sub-section (1) of section 370 for the storage of petroleum.

3. The licensee shall not open a cask or other receptacle containing petroleum nor shall draw off the oil inside the place in which petroleum is stored.

4. The licensee shall not permit smoking nor introduce any artificial light or fire, in any form, within the place licensed under clause (*xi*) of sub-section (1) of section 370.

5. The licensee shall keep all petroleum stored in a place licensed under clause (*xi*) of sub-section (1) of section 370 in properly sealed tins, drums or casks and if any tin, drum or cask be opened, shall close it securely again in such a manner that no vapour may be given off.

6. The licensee shall see that the place used for the storage of petroleum is properly ventilated.

7. The licensee shall keep in stock ready for use sufficient number of fire extinguishers and also dry sand in such quantity proportionate to that of the inflammable articles stored as the Commissioners may direct, ready for use in case of any accidental outbreak of fire.

8. A breach of any of the provisions of the by-laws 1 to 7 shall be punishable with a fine which may extend to fifty rupees, and when the breach is a continuing one, with a further fine which may extend to five rupees for every day after the date of the first conviction during which the offender is proved to have persisted in the offence.

VI.—By-laws under clause (a) of section 375 of the Bengal Municipal Act, 1932, for the regulation of the conduct of business in places used for the purposes mentioned in clause (xii) of sub-section (1) of section 370.

1. The licensee shall not store more than 1,000 maunds of hay, straw, wood, thatching grass, jute or other dangerously inflammable material in one place under a license issued under clause (*xii*) of sub-section (1) of section 370.

2. The licensee shall see that the area of the place to be used for storing hay, straw, wood, thatching grass, jute or other dangerously inflammable material is as follows:—

Minimum area.	Maximum quantity of hay, etc., to be stored.
	Mds.
100 square yards ...	50
150 square yards ...	100
200 square yards ...	400
500 square yards ...	1,000

3. The licensee shall provide a source of water close by if within 500 feet of any place used for storing hay, straw, wood, thatching grass, jute or other dangerously inflammable materials, there is a place for the storage of petroleum or cloth or articles made of jute or cotton.

4. The licensee shall provide sufficient room in a place licensed under clause (*xiii*) of sub-section (1) of section 370 for the loading and unloading of materials.

5. The licensee shall leave a clear space of at least five feet between the inflammable material and the nearest walls of any building.

6. The licensee shall enclose by a fence or wall the space occupied by inflammable materials and he shall not permit any person to reside within 10 feet of any stack.

7. The licensee shall not permit any person to smoke, introduce any light into or ignite any substance in any place licensed under clause (*xii*) of sub-section (1) of section 370.

8. The licensee shall keep one *ghara* or *balti* filled with water for every five maunds of inflammable materials which he is permitted to store:

Provided that no such licensee shall be required to keep more than 50 *gharas* or *baltis* under this by-law.

9. No licensee shall stack any inflammable material to a height exceeding 15 feet.

10. A breach of any of the provisions of by-laws 1 to 9 shall be punishable with a fine which may extend to fifty rupees and when the breach is a continuing one with a further fine which may extend to five rupees for every day after the date of first conviction during which the offender is proved to have persisted in the offence.

24-Parganas.—No. 6406M.—18th August 1936.—The following draft of by-laws, which has been framed by the Commissioners of the South Dum Dum Municipality, in the district of the 24-Parganas, under section 245 (*a*) and (*b*) of the Bengal Municipal Act, 1932 (Bengal Act XV of 1932), and which the Government of Bengal (Ministry of Local Self-Government) propose to confirm under section 506 of the Act, is published for the information of persons likely to be affected thereby.

2. The draft will be taken into consideration on the 4th December 1936, and any objection or suggestion received by the undersigned through the District Magistrate and the Divisional Commissioner before that date will be duly considered:—

Draft by-laws.

By-laws regarding prohibition and regulation of traffic under section 245 (a) and (b) of the Bengal Municipal Act, 1932.

Definition.

1. In these by-laws "cattle" means cattle as defined in section 3 of the Cattle Trespass Act, 1871 (I of 1871).

Penalties.

2. *Fines.*—The penalty for the infringement of any of these by-laws shall be—

(*a*) a fine not exceeding the sum stated at the foot of the by-law,

(*b*) in the case of a second or subsequent conviction for a similar offence a fine not exceeding the sum (if any) stated in that behalf at the foot of the by-law, and

(*c*) in the case of a continuing offence, a further fine, not exceeding the sum (if any) stated at the foot of the by-law as the daily fine, which daily fine may be imposed for each day after written notice of the offence from the commissioners.

Regulation of traffic on public streets.

3. *Youthful drivers.*—No owner of any carriage or cart shall allow it to be driven on any public street by a driver under fourteen years of age.

Fine, Rs. 10.

4. *Driving more than one carriage or cart.*—No driver shall drive or have in his charge on any public street more than one carriage or cart, except in the case of two carts, the hinder one of which is severely fastened to the preceding cart.

Fine, Rs. 10.

5. *Standing vehicles.*—No person shall keep standing on any public street any vehicle, in such a manner as to cause inconvenience to the public, for any time longer than may reasonably be required for loading or unloading or for taking up or setting down passengers.

Fine, Rs. 10; on a second or subsequent conviction, Rs. 50.

6. *Charge of carriage or cart.*—No person shall leave any carriage or cart on any public street without a person in charge thereof.

Fine, Rs. 10; on a second or subsequent conviction, Rs. 50.

7. *Rule of the road.*—Any person driving a carriage or cart, or riding a bicycle, or driving or riding an animal, or carrying a palanquin, on any public street, shall keep to his left when he passes a vehicle coming from the opposite direction or when any vehicle overtakes him, and shall keep to his right when overtaking any vehicle.

Fine, Rs. 10.

8. *Lights.*—No person shall drive any of the undermentioned vehicles or animals, or convey any palanquin, on any public street, between half-an-hour after sunset and half-an-hour before sunrise, unless lights are provided as follows:—

(*a*) every carriage must carry two conspicuous lights, one on each side;

(*b*) every cart must carry one conspicuous light;

(*c*) every elephant, camel or palanquin must be accompanied by one conspicuous light;

(*d*) every cycle must carry one conspicuous light in front.

Provided that this by-law shall not apply on nights of full-moon or on the four nights before and after full-moon, if and when the moon is clearly visible.

Fine, Rs. 50.

9. *Signals on motors and cycles.*—No person shall drive any motor-car, or ride any motor-cycle or any tricycle or bicycle, on any public street, unless it has attached to it a bell, horn or other suitable signal in good order.

Fine, Rs. 50.

10. *Maximum load for carts.*—No cart shall, without the general or special permission of the commissioners, carry on any public street a load in excess of twenty maunds.

Fine, Rs. 10.

11. *Vehicles laden with girders, etc.*—No person shall drive upon a public street any vehicle laden with iron girders, rails, beams, bullas, bamboos, planks or other materials

of a similar character which exceed twelve feet in length, unless the vehicle be accompanied by another person and be loaded in such a way that no portion of the said materials touches the ground.

Fine, Rs. 10.

12. *Vehicles laden with bricks, stones, etc.*—No person shall drive upon a public street any vehicle laden with bricks, stones or other materials of a similar character, unless such materials be so secured that they cannot fall on to the street.

Fine, Rs. 10.

13. *Animal laden with bamboos or timber.*—No person shall convey on any public street bamboos or timber placed on the back of any animal in such a way that any portion of such bamboos or timber touches the ground.

Fine, Rs. 10.

14. *Taking elephants or camels along a public street.*—No person shall, without the general or special permission of the commissioners, take any elephant or camel along any public street.

Fine, Rs. 50.

15. *Taking an elephant over a bridge.*—No person shall allow any elephant in his charge to go over any bridge on any public street unless the bridge be constructed of arched masonry, steel or ferro-concrete or similar durable material.

Fine, Rs. 50.

16. *Loaded pack-animals.*—No person shall drive upon a public street, at the same time, more than two loaded pack-animals.

Fine, Rs. 10.

17. *Foals.*—No person riding or driving a mare on any public street shall allow a foal to accompany the mare unless it is secured.

Fine, Rs. 10.

18. *Driving cart in centre of a public street.*—No person shall drive a cart on the centre of any public street on which cart-tracks are provided.

Fine, Rs. 10.

19. *Sitting or sleeping.*—No person shall sit or sleep on any public street so as to obstruct traffic.

Fine, Rs. 10.

Regulation of traffic on foot-paths.

20. *Driving or riding on foot-path.*—No person shall wilfully drive or ride any vehicle or cattle on any foot-path set apart for the use of foot-passengers.

Fine, Rs. 10.

Prevention of obstructions, encroachments or excavations on or near public streets, ghats or ferries.

21. *Abandoning or letting loose cattle.*—No person shall abandon or let loose or negligently allow to get loose, any cattle, on any public street.

Fine, Rs. 10.

22. *Children playing or wandering.*—No parent or guardian of any child below the age of seven years shall allow such child to play or wander about on any public street so as to obstruct traffic.

Fine, Rs. 10.

23. *Depositing articles.*—No person shall, without the general or special permission of the commissioners, deposit any articles on any public street, except for a temporary purpose, or use any public street as a place for keeping any vehicle or cattle, or for washing any article, or for any other private purpose:

Provided that, during the months of April, May and June, between the hours of 10 p.m. and 5 a.m., khatias may be laid on the side of a public street in such a manner as not to cause obstruction or danger to persons using the public street.

Fine, Rs. 10.

24. *Planting trees.*—No person shall plant a tree on any public street without the general or special permission of the commissioners.

Fine, Rs. 10.

25. *Excavations and enclosures.*—No person shall, without the general or special permission of the commissioners, make any excavation on any public street or on or near any ghat or public ferry or enclose any such street or any part thereof.

Fine, Rs. 10; daily fine, Rs. 2.

26. *Removing turf or cutting grass.*—No person shall, without the general or special permission of the commissioners, remove turf or cut grass from any public street or the slopes thereof.

Fine, Rs. 10.

27. *Discharge of water.*—No person shall affix or cause to be affixed to any building owned or occupied by him any gutter, spout or other thing intended for the conveyance and discharge of water, or shall leave in any such building any opening for the discharge of water, in such a way that the water discharged therefrom is thrown or falls upon a public street except through a downpipe or other suitable contrivance reaching to the level of the public street.

Fine, Rs. 10; daily fine, Rs. 2.

28. *Breaking in horses.*—No person shall break in horses on any public street not set apart for that purpose.

Fine, Rs. 10; on a second or subsequent conviction, Rs. 50.

29. *Flying kites.*—No person shall fly a kite on any public street or in such a way that it may fall on any public street.

Fine, Rs. 10.

30. *Playing games.*—No person shall play any game on any public street.

Fine, Rs. 10.

31. *Throwing stones or missiles.*—No person shall throw or discharge any stone or missile on or near any public street.

Fine, Rs. 10.

32. *Driving across a drain.*—No person shall drive any vehicle across a public drain in or near any public street so as to cause damage to such drain.

Fine, Rs. 10.

33. *Barbed wire.*—No owner or occupier of land abutting on any public street shall fence such land with barbed wire.

Fine, Rs 10; daily fine, Rs. 2.

34 *Dust-bins* No person shall—

(*a*) place any burning material in any municipal dust-bin on or near a public street, or

(*b*) burn in any such dust-bin any paper, leaves, grass, wood or other material.

Fine, Rs. 10.

35 *Closed public street.* No person shall take or drive any motor vehicle, carriage or cart on a public street or part of a street which is closed by order of the commissioners to all or any specified description of wheeled traffic or displace any barrier or fence or notice erected for the purpose of closing such public street or part thereof.

Fine, Rs. 10.

Regulation of the use or occupation of public streets or places for sale of articles, etc., and provision for the levy of fees for such use or occupation.

36. *Exposing articles for sale.*—Without the general or special permission of the commissioners which may, if they so direct, be subject to the payment of fees according to a scale prescribed by them at a meeting, no person shall use or occupy any public street or any other public place, for the sale of any article or for the exercise of any calling or for setting up any booth or stall.

Fine, Rs. 10; on a second or subsequent conviction, Rs. 50.

Jalpaiguri.—No. 6428L.S.-G.—19th August 1936.—In exercise of the power conferred by section 10A of the Bengal Local Self-Government Act, 1885 (Bengal Act III of 1885), the Government of Bengal (Ministry of Local Self-Government) are pleased to determine that the Muhammadan community in the area under the authority of the district board of Jalpaiguri shall be deemed to be a minority community for the purpose of that section.

Midnapore.—No. 6430L.S.-G.—19th August 1936.—In exercise of the power conferred by section 10A of the Bengal Local Self-Government Act, 1885 (Bengal Act III of 1885), the Government of Bengal (Ministry of Local Self-Government) are pleased to determine that the Muhammadan community in the area under the authority of the district board of Midnapore and the local boards of Sadar and Tamluk subdivisions of Midnapore district shall be deemed to be a minority community for the purpose of that section.

Noakhali.—No. 6433L.S.-G.—19th August 1936. In exercise of the power conferred by section 22 of the Bengal Local Self-Government Act, 1885 (Bengal Act III of 1885), the Government of Bengal (Ministry of Local Self-Government) are pleased to approve the election, by the members of the Noakhali district board, of Maulvi Rezzakul Haider Choudhuri, B.L., to be their Chairman.

Hooghly.—No. 6570M.—24th August 1936.—In exercise of the power conferred by section 506 of the Bengal Municipal Act, 1932 (Bengal Act XV of 1932), the Government of Bengal (Ministry of Local Self-Government) are pleased to confirm the by-laws framed by the Commissioners of the Baidyabati Municipality in the district of Hooghly, under section 392(*a*) of the said Act and published for information under notification No. 4507M., dated the 19th May 1936.

24-Parganas.—No. 6472M.—20th August 1936.—In exercise of the power conferred by section 58 (*2*) of the Bengal Municipal Act, 1932 (Bengal Act XV of 1932), the Government of Bengal (Ministry of Local Self-Government) are pleased to appoint Messrs. P. M. Duncan and G. B. Thomson as Commissioners of the Baranagore Municipality, in the district of the 24-Parganas, *vice* Messrs. J. K. Elder and Charles Morrow, respectively, resigned.

24-Parganas.—No. 6515M.—21st August 1936.—The following draft of by-laws, which has been framed by the Commissioners of the South Dum Dum Municipality, in the district of the 24-Parganas, under section 460 of the Bengal Municipal Act, 1932 (Bengal Act XV of 1932), and which the Government of Bengal (Ministry of Local Self-Government) propose to confirm under section 506 of the Act, is published for the information of persons likely to be affected thereby.

2. The draft will be taken into consideration on the 4th December 1936, and any objection or suggestion received by the undersigned through the District Magistrate and the Divisional Commissioner before that date will be duly considered:—

Draft by-laws.

By-laws regulating sarais, dharamsalas and other lodging houses.

Penalties.

1. *Fine.*—The penalty for infringement of any of the following by-laws shall be—

(*a*) a fine not exceeding the sum stated at the foot of the by-law,

(*b*) in the case of a second or subsequent conviction for a similar offence, a fine not exceeding the sum (if any) stated in that behalf at the foot of the by-law.

Registration and inspection of sarais, dharamsalas and other lodging houses.

2. The owner of each *sarai, dharamsala* or lodging-house shall have the same registered in the office of the Commissioners and shall specify at the time of registration the number of persons to be accommodated in each room thereof.

Fine, Rs. 10.

3. The owner or person in charge of each *sarai, dharamsala* or lodging-house shall permit the same to be inspected at any time by any officer authorised in that behalf by the Commissioners at a meeting.

Fine, Rs. 10.

Prevention of overcrowding and uncleanliness.

4. The owner or person in charge of any *sarai, dharamsala* or lodging-house shall not allow any room therein to be occupied at any time by a larger number of persons than may be provided with a floor space of not less than 25 square feet and a cubic space of not less than 250 cubic feet per adult person.

Explanation.—Two children under ten years of age shall be counted as one adult person for the purposes of this by-law.

Fine, Rs. 10.

5. The owner or person in charge of a *sarai, dharamsala* or lodging-house shall see that the rooms and other parts thereof and the surroundings thereof are kept clean and well-ventilated and that proper and sufficient arrangements are made for conservancy with separate privies and urinals for the use of males and females, and for drinking water for the use of the inmates.

Fine, Rs. 10.

Precautions in the case of outbreak of infectious diseases.

6. In the event of an outbreak of any infectious or contagious disease in a *sarai, dharamsala* or lodging-house, the owner or person in charge thereof shall at once give information to the Commissioners respecting the existence of such disease.

Fine, Rs. 10; on a second or subsequent conviction, Rs. 50.

7. If any person is attacked with an infectious or contagious disease in a *sarai, dharamsala* or lodging-house, the owner or person in charge thereof shall take immediate steps for the segregation of other healthy inmates thereof and shall adopt such precautionary measures as may be directed by the Commissioners.

Fine, Rs. 10; on a second or subsequent conviction, Rs. 50.

General.

8. The owner or person in charge of a *sarai, dharamsala* or lodging-house shall not allow the same to be used for immoral purposes.

Fine, Rs. 10.

9. The owner or the person in charge of a *sarai, dharamsala* or lodging-house shall not allow a leper or other person suffering from an open sore or any loathsome or contagious disease to be employed in or to assist in the carrying on of any business in, or to enter or occupy any portion of such place.

Fine, Rs. 10.

Burdwan.—No. 6590M.—24th August 1936.—The following draft of by-laws which has been framed by the Commissioners of the Raniganj Municipality, in the district of Burdwan, under section 417 of the Bengal Municipal Act, 1932 (Bengal Act XV of 1932), and which the Government of Bengal (Ministry of Local Self-Government) propose to confirm under section 506 of the Act, is published for the information of persons likely to be affected thereby.

2. The draft will be taken into consideration on the 1st December 1936 and any objection or suggestion received by the undersigned through the District Magistrate and the Divisional Commissioner before that date will be duly considered:—

Draft by-laws.

By-laws regarding standardization of weights and measures (section 417 of the Bengal Municipal Act, 1932).

1. In these by-laws the word "vendor" includes a shop-keeper, stall-holder, squatter or other salesman in any market or in any other place within the municipality.

2. All vendors within the municipality shall use—

(*i*) Government standard weights, that is to say, a *maund* consisting of forty *seers*, a *seer* consisting of eighty *tolas* and a *tola* consisting of one hundred and eighty *grains;* and

(*ii*) a standard cubit consisting of eighteen inches for the measure of commodities other than land.

3. The Commissioners shall require the superintendents of the municipal markets or any other officers duly authorised by them in that behalf, and may require the owner, manager or other person in charge of a private market to keep in their custody standards of weights and measures conforming with the standard prescribed in by-law 2 for the purpose of verifying the weights and measures used by any vendor for the sale of articles in any market or in any other place. Such superintendents or other officers duly authorised by the Commissioners shall keep in their custody a die for the purpose of stamping weights and measures, which have been duly verified in the manner provided in by-law 4.

4. The superintendent of a municipal market or any other officer duly authorised by the Commissioners in that behalf, shall, not less than once in every three months, test and verify the weights and measures used by each vendor in every market or other place by comparison with the aforesaid standards and shall also similarly test and verify every weight or measure that may be brought to him by any person at his office for the purpose of verification; and if, in either case, he finds the same to be correct, shall stamp it with the die mentioned in by-law 3 by way of verification on payment of such fee, *not exceeding annas four* in each case, as the Commissioners may from time to time direct:

Provided that weights and measures once stamped shall not be stamped with the die a second time unless the stamp has become faint or obliterated.

Hooghly. - No. 6566M. 22nd August 1936.—In exercise of the power conferred by section 506 of the Bengal Municipal Act, 1932 (Bengal Act XV of 1932), the Government of Bengal (Ministry of Local Self-Government) are pleased to confirm the by-laws framed by the Commissioners of the Baidyabati Municipality in the district of Hooghly under section 414 of the said Act and published for information under notification No. 1980M., dated the 27th March 1936.

24-Parganas. No. 6568M. 22nd August 1936.—In exercise of the power conferred by section 506 of the Bengal Municipal Act, 1932 (Bengal Act XV of 1932), the Government of Bengal (Ministry of Local Self-Government) are pleased to confirm the by-laws framed by the Commissioners of the Tollygunj Municipality in the district of 24-Parganas under section 414 of the said Act and published for information under notification No. 2962M., dated the 27th April 1936.

Murshidabad. No. 6535L.S.-G. — 22nd August 1936. In exercise of the power conferred by section 11 of the Bengal Local Self-Government Act, 1885 (Bengal Act III of 1885), the Government of Bengal (Ministry of Local Self-Government) are pleased to appoint the following gentlemen to be members of the local boards in the district of Murshidabad:—

Sadar local board.

Senior Circle Officer, Sadar (*ex-officio*).
Khan Bahadur Maulvi Ekramul Huq, B.L.
Maulvi Shaikh Abdur Rashid.
Haji Shaikh Abdul Kader.
Munshi Joyeduddin Biswas.
Munshi Kafiluddin Ahmed.

Lalbagh local board.

Munshi Fazle Haque.
Maulvi Muhammad Khalilar Rahman.
Babu Charu Pado Bhattacharji.
Maulvi Osman Mandal.
Munshi Ilibash Mandal.

Jangipur local board.

Munshi Erfan Ali Khan.
Babu Simal Majhi.
Munshi Afsar Hossain.
Haji Kefatulla Shaikh.
Maulvi Monab Mandal.

Kandi local board.

Babu Bhimapada Ghose.
Babu Dwija Pado Banerjee.
Babu Bijoyendu Narayan Roy.
Babu Dakshina Ranjan Sharma Mukhopadhya.
Munshi Shaikh Jainal Hossain.

No. 6611L.S.-G.—25th August 1936.—In exercise of the power conferred by clause (*p*) of section 138 of the Bengal Local Self-Government Act, 1885 (Bengal Act III of 1885), the Government of Bengal (Ministry of Local Self-Government) are pleased to make the following amendment in the rules published with notification No. 3164L.S.-G., dated the 24th May 1935:

Amendment.

In rule 4, between the words "shall" and "expose" in lines 2 and 3, respectively, *insert* the words "prepare, help in the preparation of or"

24-Parganas.—No. 6609M.—25th August 1936.—In exercise of the power conferred by section 8 of the Bengal Municipal Act, 1932 (Bengal Act XV of 1932), and in supersession of the extent set forth in notification No. 3151M., dated the 26th July 1932, the Government of Bengal (Ministry of Local Self-Government) are pleased to declare that the extent of the Baruipur Municipality, in the district of 24-Parganas, shall comprise the following mauzas of police-station Baruipur consisting of cadastral survey plots mentioned against each mauza:—

Salipur (jurisdiction list 33) Plots Nos. 211, 415-432, 440, 441, 443, 471-478, 487, 491, 501, 503-505 and 511-539.

Subudhipur (jurisdiction list 32)—Plots Nos. 1-701, 707-836, 933, 1152-1161, 1163, 1164, 1168, 1170, 1171, 1175-1186, 1188-1192 and 1194-1250.

Baruipur (jurisdiction list 31)—All the plots contained in sheet I, viz., plots Nos. 1-72, 174-277, 279-282, 285, 287-343, 345-427, 429-662, 665-668, 670-698, 700, 703-706, 708-714, 716-730, 733-772, 775, 776, 780-891, 893-932, 934-951, 957-1000, 5296-5306, 5310 and 5315-5317.

Baruipur (jurisdiction list 31)—All the plots contained in sheet II, viz., plots Nos. 1001-1461, 1463-2835, 2837-3040 and 3042-3056.

Baruipur (jurisdiction list 31)—All the plots contained in sheet III, viz., plots Nos. 4001-4021, 4027, 4029-4175, 4178, 4179, 4182-4185, 4187, 4188, 4190-4201, 4203-5295, 5307-5309 and 5311-5314.

Sashon (jurisdiction list 66)—All the plots contained in sheet III, viz., plots Nos. 2201-2727, 2729-2743, 2746-2785.

Maps may be inspected in the office of the Magistrate of the 24-Parganas.

Public Health.

NOTIFICATIONS.

Minister-in-charge: The Hon'ble Sir Bijoy Prasad Singh Roy, Kt.

Calcutta.—No. 3301P.H.—19th August 1936.—Major A. C. Chatterji, M.B., D.P.H., I.M.S., is appointed substantively to the post of Director of Public Health, Bengal, with effect from the 17th June 1936.

Calcutta.—No. 3320P.H.—19th August 1936.—Dr. Upendra Nath Roy, M.B., D.P.H., who was appointed to act as 1st Assistant Port Health Officer, Calcutta, in notification No. 1450 P.H., dated the 16th April 1936, reverted to his permanent appointment as 2nd Assistant Port Health Officer, Calcutta, with effect from the 15th July 1936.

Calcutta.—No. 3321P.H.—19th August 1936.—Dr. M. J. Mehta, M.B., D.P.H., who was appointed to act as 2nd Assistant Port Health Officer, Calcutta, in notification No. 1451 P. H., dated the 16th April 1936, is appointed to act as 3rd Assistant Port Health Officer, Calcutta, with effect from the 15th July 1936, until further orders.

Chittagong.—No. 3357P.H.—24th August 1936.—In exercise of the power conferred by clause (*b*) of sub-section (*1*) of section 2 of the Bengal Agricultural and Sanitary Improvement Act, 1920 (Bengal Act VI of 1920), the Government of Bengal (Ministry of Public Health) are pleased to appoint Mr. H. Banerjee, I.C.S., Additional District Magistrate, Chittagong, to discharge all functions of the Collector under that Act in respect of the district of Chittagong.

Chittagong.—No. 3385P.H.—25th August 1936.—In pursuance of section 50, sub-section (*2*) of the Indian Ports Act, 1908, the following abstract account of receipts and expenditure of the Hospital Port Dues Fund, Chittagong, for the year 1935-36 is published for general information. It forms a supplement to the abstract account of receipts and expenditure of the Chittagong Port Fund for the year 1935-36, published at pages 698-699, Part II of the *Calcutta Gazette*, dated the 30th July 1936:—

Abstract Account of the Receipts and Expenditure on account of the Chittagong Hospital Port Dues Fund, during the year 1935-36.

Receipts.	Amount.	Expenditure.	Amount.	Total.
	Rs. a. p.		Rs. a. p.	Rs. a. p.
		(*a*) Debitable to balance—		
Balance on the 1st April 1935	4,565 10 6	Audit fee of the accounts of the Hospital Port Dues Fund, Chittagong, for the half year ending March 1935.	50 0 0	
Hospital Port Dues Collection.	2,878 12 0			
Interests on Government securities and deposits in the Bank.	665 9 5	Audit fee of the accounts of the Hospital Port Dues Fund, Chittagong, for the half year ending September 1935.	50 0 0	100 0 0
		(*b*) Debitable to the Hospital Port Dues—		
		Annual subsidy to the Port Commissioners, Chittagong.	300 0 0	
		Contribution to the General Hospital, Chittagong.	3,240 0 0	3,540 0 0
				3,640 0 0
Total ..	3,544 5 5	Balance on 31st March 1936 ..		*4,469 15 11
Grand Total ..	8,109 15 11	Grand Total ..	....	8,109 15 11

*Exclusive of Rs. 14,977-15-2 invested in Government Promissory Notes (4 per cent. Loan of 1960-70) of the face value of Rs. 14,500 which are in the safe custody of the Reserve Bank of India.

G. S. DUTT,
Secy. to the Govt. of Bengal.

Orders by the Director of Public Health, Bengal.

No. 11436A.—20th August 1936.—Maulvi Badi Uzzaman, Assistant Analyst, Dacca Public Health Laboratory, is transferred to Calcutta in the interest of the public service, with effect from the 13th August 1936.

A. C. CHATTERJI, M.B., D.P.H., MAJOR, I.M.S.,
Director of Public Health, Bengal.

EDUCATION DEPARTMENT.

NOTIFICATIONS.

Minister-in-charge: The Hon'ble Khan Bahadur M. Azizul Haque.

Chittagong.—No. 2803Edn.—20th August 1936. Mr. Mahima Ranjan Barua, Professor of Pali, Chittagong College, was granted by the High Commissioner for India, leave on half average pay for the period from the 2nd to 15th July 1936, under Fundamental Rule 81(*d*), in extension of the leave already granted to him, with the summer vacation of the College for 1936, included between the two periods of leave, under rule 82(*d*) of the same rules.

Hooghly.—No. 2811Edn. -21st August 1936.—Babu Benoy Kumar Choudhury, Lecturer in Economics, Bethune College, Calcutta, is appointed to act in the Bengal Educational Service as Professor of that subject at the Hooghly College, with effect from the date on which he joins the appointment, *vice* Mr. Satish Chandra Basu, on leave, or until further orders.

Dacca.- No. 2817 Edn. -21st August 1936. Babu Hem Chandra Banerjee, officiating Professor, Teachers' Training College, Dacca, is appointed substantively to the post and in the Bengal Educational Service, with effect from the 1st April 1934, *vice* Babu Guru Bandhu Bhattacharjee, promoted to the Bengal Senior Educational Service.

Calcutta.- No. 2825Edn.—21st August 1936.—Mahamahopadhyaya Pandit Jogendra Nath Vedantatirtha, officiating Professor of Nyaya in the Tol Department of the Sanskrit College, Calcutta, is appointed substantively to the Bengal Educational Service (Revised Scale), with effect from the date of his appointment to the post, *vice* Mahamahopadhyaya Pandit Kunja Behari Tarkasiddhanta, deceased.

Rajshahi-Chittagong.—No. 2828Edn.—22nd August 1936.—Miss Gladys Seine, officiating Assistant Inspectress of Schools, Rajshahi Division (Rajshahi), is appointed to act as Assistant Inspectress of Schools, Chittagong, with effect from the 31st October 1936 or any subsequent date on which she joins the appointment, during the absence, on leave, of Miss Tejmoyee Sarkar, or until further orders.

Rajshahi.—No. 2829Edn.—22nd August 1936.—Miss Chameli Dutt is appointed to act in the Bengal Educational Service (Women's Branch) as Assistant Inspectress of Schools, Rajshahi Division (Rajshahi), with effect from the 2nd November 1936 or any subsequent date on which she joins the appointment, during the absence, on leave, of Miss Niroj Bashini Shome, or until further orders.

Burdwan.—No. 2838Edn.—24th August 1936.- Rai Kshitish Chandra Ray Bahadur, Inspector of Schools, Burdwan Division, is granted leave on average pay for twenty-two days, with effect from 31st October 1936, under rule 81 (*b*) (*ii*) of the Fundamental Rules.

Calcutta-Chittagong.—No. 2841Edn. —24th August 1936.—Mr. Makhan Lal Chakrabartty, Assistant Head Master, Ballyganj Government High School, is appointed to act in the Bengal Educational Service as Head Master, Chittagong Collegiate School, with effect from the 1st September 1936 or any subsequent date on which he joins the appointment, *vice* Babu Aswini Kumar Bhattacharjee, on leave preparatory to retirement, or until further orders.

Registration.

NOTIFICATION.

Minister-in-charge: The Hon'ble Khan Bahadur M. Azizul Haque.

Faridpur.—No. 531Regn. —24th August 1936.—Maulvi Abul Khair Mohammad Yusuff, District Sub-Registrar of Faridpur, is allowed leave on average pay, on medical certificate, for three months and fifteen days, with effect from the 24th May 1936, under the proviso to rule 81(*b*)(*ii*) of the Fundamental Rules, in extension of the leave granted to him in notification No. 162Regn., dated the 27th February 1936.

H. GRAHAM,
Secy. to the Govt. of Bengal.

Orders by the Director of Public Instruction, Bengal.

Bengal Educational Service.

Bakarganj. No. 40B. 12th August 1936. Maulvi Abdur Razzaq Chaudhury, officiating Head Master, Jhalakati Government High School, in the Bengal Educational Service, is declared, in terms of rules 81 (*b*) (*ii*) and 82 (*b*) of the Fundamental Rules, to have been on leave, on average pay, for the period from 22nd June 1936 to 29th June 1936.

2. He is permitted to prefix to his leave the summer vacation of the Jhalakati Government High School, extending from 21st May 1936 to 21st June 1936, under Fundamental Rule 82 (*d*).

Mymensingh. — No. 40B. — 12th August 1936.—Mr. Abdul Hakim, District Inspector of Schools, Mymensingh, in the Bengal Educational Service, is granted earned leave for the period from 5th October 1936 to 17th October 1936, under rule 10 of the Bengal Services (Revision of Leave) Rules, 1934.

Chittagong Divn.—No. 41B.—15th August 1936.—Babu Dwijendra Nath Datt Choudhury, officiating 2nd Inspector of Schools, Chittagong Division, in the Bengal Educational Service, is granted leave on average pay for one month, under Fundamental Rule 81 (*b*) (*ii*), with effect from 23rd July 1936.

Calcutta.—No. 42B.—15th August 1936.—Rai Sahib Akshay Kumar Dutta Gupta, Kaviratna, Librarian, Bengal Library, in the Bengal Educational Service, is granted privilege leave for the period from 31st October 1936 to 21st November 1936, under Article 260 of the Civil Service Regulations.

Chittagong Divn.—No. 43B.—15th August 1936.—Miss Tejomoyee Sircar, Assistant Inspectress of Schools, Chittagong Division, in the Women's Branch of the Bengal Educational Service, is granted leave on average pay for four months, under Fundamental Rule 81 (*b*) (*ii*), with effect from 31st October 1936.

J. M. BOTTOMLEY,
Director of Public Instrn., Bengal.

Orders by the Inspector-General of Registration, Bengal.

Midnapore.—No. 478.—17th August 1936.—Babu Bamkim Chandra Mukherji, Sub-Registrar of Danton, in the district of Midnapore, is allowed leave on average pay for two months and four days, under rule 81 (*b*) (*ii*) of the Fundamental Rules, in extension of the leave granted to him in this department notification No. 423, dated the 18th July 1936.

Midnapore.—No. 479.—17th August 1936.—Babu Jitendra Lal Basu, Sub-Registrar of Balichak, in the district of Midnapore, under orders of transfer to Anandpur in the same district, is allowed leave on average pay for two months and eight days, under rule 81 (*b*) (*ii*) of the Fundamental Rules, with effect from the 10th August 1936.

Midnapore.—No. 480.—17th August 1936.—Babu Gauri Sankar Mukherjee, Sub-Registrar attached to the Sadar Registration office at Midnapore, is appointed to act as Sub-Registrar of Anandpur in the same district, till he is relieved by Babu Jitendra Lal Bose, or until further orders.

Khulna.—No. 481.—17th August 1936.—Babu Bhababhuti Bhattacharji, Sub-Registrar attached to the Sadar Registration office, Khulna, is appointed to act, until further orders, as Sub-Registrar of Kaliganj in the same district, with effect from the 10th August 1936.

Khulna.—No. 482.—17th August 1936.—Babu Hira Lal Das, Sub-Registrar of Kaliganj, in the district of Khulna, on leave, is appointed to be Joint Sub-Registrar of Morrelganj at Kachua in the same district.

Khulna-Bakarganj. — No. 483. — 18th August 1936.—Maulvi Muhammad Saleh, Sub-Registrar of Morrelganj, in the district of Khulna, is appointed to be Sub-Registrar of Amtoli, in the district of Bakarganj.

Bakarganj-Jessore. — No. 484. — 18th August, 1936.—Maulvi Afiluddin Ahmed, Sub-Registrar of Amtoli, in the district of Bakarganj, on leave, is appointed to be Sub-Registrar of Salkopa, in the district of Jessore.

Jessore-Khulna.—No. 485.—18th August 1936.—Babu Jatindra Nath Basu, Sub-Registrar of Salkopa, in the district of Jessore, on leave, is appointed to be Sub-Registrar of Bagerhat, in the district of Khulna.

Khulna—No. 486.—18th August 1936.—Babu Sachi Nath Guha, Sub-Registrar of Begerhat, in the district of Khulna, is appointed to be Sub-Registrar of Morrelganj in the same district.

Mymensingh. — No. 487.—18th August 1936.—Maulvi Hamidul Huq, formerly Sub-Registrar of Phulbaria, in the district of Mymensingh, is allowed leave for six months, viz., leave on half average pay for two months, under rule 81(*d*) of the Fundamental Rules, in extension of the leave granted to him in this department notification No. 179, dated the 30th March 1936, and leave on quarter average pay, under rule 88 of the same rules, for the remaining period.

Burdwan.—No. 488.—22nd August 1936.—Maulvi Muhammad Habiluddin, Sub-Registrar of Guskara, in the district of Burdwan, is allowed leave on average pay for three months and fifteen days, under rule 81 (*b*) (*ii*) of the Fundamental Rules with effect from the 9th September 1936.

Burdwan.—No. 489.—22nd August 1936.—Lala Profulla Prakash Nanday, Sub-Registrar attached to the Sadar Registration office at Burdwan, is appointed to act as Sub-Registrar of Guskara, in the same district, with effect from the 9th September 1936, or any subsequent date on which he joins the appointment, during the absence, on leave, of the permanent incumbent, or until further orders.

Tippera-Chittagong.—No. 490.—22nd August 1936.—Maulvi Wakiluddin Ahmed Chaudhury, Probationary Sub-Registrar attached to the Sadar Registration office at Comilla, in the district of Tippera, is appointed to act as 1st Joint Sub-Registrar of Patiya at Boalkhali, in the district of Chittagong, during the absence, on leave, of the permanent incumbent, or until further orders.

Dacca-Mymensingh.—No. 491.—22nd August 1936.—Maulvi Khawja Muhammad Salim, 2nd Joint Sub-Registrar of Srinagar at Sirajdi-Khan, in the district of Dacca, is appointed to be Sub-Registrar of Bhairab, in the district of Mymensingh.

Mymensingh-Dacca.—No. 492—22nd August 1936.—Babu Shudhanshu Bhusan Ray, Sub-Registrar of Bhairab in the district of Mymensingh, is appointed to be 2nd Joint Sub-Registrar of Srinagar at Sirajdikhan, in the district of Dacca.

S. CHATTERJEA,
Inspector-General of Regn., Bengal.

FINANCE DEPARTMENT.

Audit.

NOTIFICATIONS.

No. 6828F.—24th August 1936.—In exercise of the powers conferred by rules 41 and 44 of the Civil Services (Classification, Control and Appeal) Rules, the Governor in Council and acting with his Ministers is pleased to make the following amendment to the Bengal Services (Revision of Leave) Rules, 1934, namely:—

Amendment.

For rule 10 of the said rules, the following shall be substituted, namely:—

"The earned leave admissible to a Government servant in permanent employ is one-eleventh of the period spent on duty:

Provided that, when the earned leave due amounts to—

(*i*) 120 days in the case of a Government servant in superior service, who is stationed at and proceeds on leave from a remote locality referred to in Fundamental Rule 105 (*d*);

(*ii*) 90 days in the case of any other; he shall cease to earn such leave."

No. 6698F.—13th August 1936.—In exercise of the powers conferred by rule 44 of the Fundamental Rules and rule 41, Civil Services (Classification, Control and Appeal) Rules, the Governor in Council and acting with his Ministers is pleased to make the following amendments to the Subsidiary Rules made under Fundamental Rule 44, namely:—

Amendments.

For item 2 under "Land Revenue" in Appendix No. 6, the following shall be substituted:—

	Rate of daily allowance. Rs. as.
Settlement Officers, Assistant Settlement Officers, Assistant Director of Surveys, Officers of the Bengal Provincial Service of the Survey of India, Deputy Collectors and Sub-Deputy Collectors employed on survey work in Bengal—	
Officers on Rs. 750 or upwards, or members of the Indian Civil Service not entitled to overseas pay on Rs. 600 and upwards ..	7 8
Members of the Indian Civil Service entitled to overseas pay on less than Rs. 750, or not entitled to overseas pay on less than Rs. 600 ..	6 0
Other officers below Rs. 750 ..	50 per cent. more than ordinary rate subject to a maximum of Rs. 5.

E. N. BLANDY,
Secy. to the Govt. of Bengal.

COMMERCE DEPARTMENT.

NOTIFICATION.

No. 5922Com.—19th August 1936.—In exercise of the power conferred by sub-rule (2) of rule 40A of the Indian Electricity Rules, 1922, and in supersession of this Government notification No. 12125 Com., dated the 24th December 1935, the Governor in Council is pleased to appoint the 1st April 1937 as the date on which the said rule 40A shall come into force in Calcutta and the districts of the 24-Parganas and Howrah and the Sadar and Serampore subdivisions of the district of Hooghly.

E. N. BLANDY,
Secy. to the Govt. of Bengal.

PUBLIC WORKS DEPARTMENT.

Establishment.

NOTIFICATIONS.

Minister-in-charge: The Hon'ble Nawab Sir Mohiuddin Faroqui, Kt., of Ratanpur.

No. 38.—19th August 1936.—Babu Sripada Ghose, Assistant Engineer, City Division, is transferred, in the interest of the public service, to the Suburban Division, *vice* Mr. H. W. Irwin, Assistant Executive Engineer, transferred.

2. This supersedes the orders issued in this department notification No. 36, dated the 10th August 1936, transferring him to the Eastern Circle.

No. 39.—19th August 1936.—Mr. H. W. Irwin, Assistant Executive Engineer, Suburban Division, is transferred, in the interest of the public service, to the Eastern Circle.

H. S. E. STEVENS,
Secy. to the Govt. of Bengal.

DEPARTMENT OF AGRICULTURE AND INDUSTRIES.

Industries.

CALCUTTA, THE 17TH AUGUST 1936.

RESOLUTION—No. 5285 IND.

Minister-in-charge: The Hon'ble Nawab Sir Mohiuddin Faroqui, Kt., of Ratanpur.

Read an application, dated the 25th June 1936, from Messrs. The Bengal Belting Works, Ltd., of Calcutta for a loan of Rs. 80,000 under the Bengal State Aid to Industries Act, 1931 (Bengal Act III of 1931), for the purpose of paying off major portion of an existing loan and of utilising the balance as working capital.

Read also the resolution adopted at the meeting of the Board of Industries, Bengal, held on the 22nd July 1936 and incorporated in the report submitted with letter No. 324B.I., dated the 3rd August 1936, from the Secretary to the Board of Industries, Bengal.

Order—Ordered that the application be rejected and the resolution be published in the *Calcutta Gazette*.

By order of the Govt. of Bengal
(Ministry of Industries),

H. S. E. STEVENS,
Secy. to the Govt. of Bengal.

CALCUTTA, THE 19TH AUGUST 1936.

RESOLUTION—No. 5426 IND.

Minister-in-charge: The Hon'ble Nawab Sir Mohiuddin Faroqui, Kt., of Ratanpur.

Read an application, dated the 24th September 1935, from the Visva-Bharati, Santiniketan, district Birbhum, asking for an advance of Rs. 10,000 under section 19 (*1*) (*a*) of the Bengal State Aid to Industries Act, 1931 (Bengal Act III of 1931), for the purpose of running a small cotton and silk weaving factory at Santiniketan on commercial basis as also to demonstrate the possibility of making such small scale weaving factories profitable.

Read also the resolution of the meeting of the Board of Industries, Bengal, held on the 29th April 1936, and the report submitted with letter No. 225 B. I., dated the 3rd July 1936, from the Secretary to the Board.

Order.—Ordered that the advance of Rs. 10,000 asked for be sanctioned, provided that the amount of advance does not exceed 50 per cent. of the net value of the assets of the applicant in the industry after deducting all encumbrances thereon existing at the time when the application was made. The advance is also subject to the following conditions:—

(*i*) that a mortgage bond be executed by the applicant Visva-Bharati in the form prescribed by Government for the purpose;

(*ii*) that interest be charged at the rate of 6¼ per cent. per annum payable with each instalment on the balance of the unpaid principal;

(*iii*) that penal interest be charged at the rate of 8 per cent per annum on any overdue instalment of repayment of the loan; and

(*iv*) that the entire amount of the loan with interest thereon be repaid in five yearly instalments of Rs. 2,000 each *plus* interest, the first instalment being payable next year on the day and month in which it will be advanced this year.

Ordered also that the resolution be published in the *Calcutta Gazette*.

By order of the Govt. of Bengal
(Ministry of Industries),

H. S. E. STEVENS,
Secy. to the Govt. of Bengal.

Forests.

NOTIFICATION.

Jalpaiguri Divn.—No. 1020For.—6th August 1936.—Mr. Quazi Gholam Ghaus is appointed to be a probationary Extra Assistant Conservator of Forests, Bengal, and is posted in the Jalpaiguri Forest Division at Jalpaiguri.

H. S. E. STEVENS,
Secy. to the Govt. of Bengal.

Orders by the Conservator of Forests, Bengal.

Jalpaiguri.—No. 9743 For.—19th August 1936.—Mr. Quazi Gholam Ghaus, probationary Extra Assistant Conservator of Forests, on first appointment, is posted to the Jalpaiguri Division, as an attached officer, with headquarters at Jalpaiguri, for a period of three weeks. After the expiry of this period he will take over charge of the Lower Tondu Range of the same division with headquarters at Lataguri.

W. MEIKLEJOHN,
Conservator of Forests, Bengal.

REVENUE DEPARTMENT.

Land Revenue.

NOTIFICATIONS.

Rajshahi.—No. 11932 L. R.—19th August 1936.—In exercise of the power conferred by sub-section (*2*) of section 3 of the Bengal Agricultural Debtors Act, 1935 (Bengal Act VII of 1936), the Governor in Council is pleased to appoint the following persons to be Chairman and members respectively of the undermentioned Debt Settlement Boards in the Rajshahi district for a term of three years with effect from 15th July 1936:—

Nator subdivision.

Gurudaspur Debt Settlement Board.

1. Babu Matilal Choudhury, Chairman and member.

Members.

2. Babu Bholanath Kundu.
3. Babu Sureshwar Kundu.
4. Maulvi Muhammad Umiruddin Molla.
5. Maulvi Del Mahammad.

Bamankola Debt Settlement Board.

1. Maulvi Jan Muhammad Talukdar, Chairman and member.

Members.

2. Babu Krishnabandhu Pramanik.
3. Babu Jibankrishna Chaki.
4. Maulvi Muhammad Sefatulla Mia.
5. Maulvi Elahi Baksh Mia.

Hat Singra Debt Settlement Board.

1. Babu Bishnu Chandra Shaha, Chairman and member.

Members.

2. Babu Sriram Chandra Datta
3. Munshi Gazibuila Sardar.
4. Munshi Nasiruddin Sardar.
5. Babu Banamali Das.

Chhota Chowgram Debt Settlement Board.

1. Babu Monoranjan Bhadury, Chairman and member.

Members.

2. Babu Har Chandra Shaha.
3. Munshi Mahiruddin Pramanik.
4. Munshi Chis Lal Khalifa.
5. Munshi Hakimuddin.

Ranbagha Debt Settlement Board.

1. Babu Musuddi Lall Agarwala, Chairman and member.

Members.

2. Babu Joylal Agarwala.
3. Maulvi Masimuddin Talukdar.
4. Munshi Moharali Pramanik.
5. Munshi Maria Paramanik.

Naogaon subdivision.

Hapania Debt Settlement Board.

1. Maulvi Basiruddin Sardar, Chairman and member.

Members.

2. Babu Haripada Ghosh.
3. Munshi Parabdi Mondal.
4. Munshi Akbar Mondal.
5. Babu Prassanna Chandra Mondal.

Khajur Debt Settlement Board.

1. Babu Narendra Narayan Choudhury, Chairman and member.

Members.

2. Babu Gopaldutt Lahiri.
3. Dr. Ashutosh Khan.
4. Munshi Khair Baxa Mondal.
5. Munshi Muhammad Isab Mondal.

Mathurapur Debt Settlement Board.

1. Maulvi Asmatulla Talukdar, Chairman and member.

Members.

2. Maulvi Mahiruddin Choudhuri.
3. Maulvi Majafar Hossain Mondal.
4. Babu Durlav Chandra Basak.
5. Babu Jogendra Nath Ghosh.

Rajshahi.—No. 11933L.R.—19th August 1936.—In exercise of the power conferred by sub-section (*1*) of section 3 of the Bengal Agricultural Debtors Act, 1935 (Bengal Act VII of 1936), the Governor in Council is pleased to establish the undermentioned Debt Settlement Boards in the Nator subdivision of the Rajshahi district for the local areas respectively shown against each.

In exercise of the power conferred by sub-section (*1*) of section 40 of the said Act read with rules 31 and 82 of the Bengal Agricultural Debtors Rules, 1936, the Governor in Council is pleased to appoint the Subdivisional Magistrate of Nator, *ex-officio*, as Ordinary Appellate Officer and the munsif of Rampur-Boalia (Rajshahi), *ex-officio*, as Special Appellate Officer for each of the said local areas :—

Name of Debt Settlement Board.	Names of mauzas comprising the local area, with jurisdiction list number of each mauza.	
Gurudaspur	Gurudaspur	153
	Khamar-Nachkair ..	154
	Chanchkair	155
	Par Gurudaspur	152
	Narayanpur	146
Bamankola	Masinda ..	169
	Bamankola ..	168
	Hansmari	178
Hat Singra	Hat Singra	574
	Singra	577
	Uttar Damdama	571
	Dakshin Damdama ..	511
	Kata Pukuria	573
Chhota Chawgaon	Chhota Chaugoan, Bara Chaugoan } ..	489
	Pambaria	496
	Nima Kadma	396
	Baria	498
Ranbagha	Ranbagha	334
	Kostha	304
	Dat Manik ..	303
	Mathurapur	302
	Hatnar	255

Rajshahi.—No. 12146L.R.—24th August 1936.—In exercise of the power conferred by sub-section (*1*) of section 3 of the Bengal Agricultural Debtors Act, 1935 (Bengal Act VII of 1936), the Governor in Council is pleased to establish the undermentioned Debt Settlement Boards in the Naogaon subdivision of the Rajshahi district for the local areas respectively shown against each.

In exercise of the power conferred by sub-section (*1*) of section 40 of the said Act read with rules 31 and 82 of the Bengal Agricultural Debtors Rules, 1936, the Governor in Council is pleased to appoint the Subdivisional Magistrate of Naogaon, *ex-officio*, as Ordinary Appellate Officer and the munsif of Rampur-Boalia (Rajshahi), *ex-officio*, as Special Appellate Officer for each of the said local areas :—

Name of Debt Settlement Board.	Names of mauzas comprising the local area, with jurisdiction list number of each mauza.	
Hapania	Hat-Hapania	311
	Mohanpur	318
	Saluka	332
	Makharpur	321
	Dafail	319
Khajur	Khajur	36
	Debipur	40
	Dakshinora	105
	Jaypur	15
Mathurapur	Gayespur	2
	Mathurapur	7
	Pirizpur	3
	Hatsapila	6
	Jalalpur	34

Bogra.—No. 11978 L. R.—20th August 1936.—Under the provisions of section 3(*14*) of the Bengal Tenancy Act, 1885 (Act VIII of 1885), Babu Jajneswar Majumdar, Settlement Kanungo, is authorised to discharge, in the district of Bogra, the functions of a Revenue Officer, under Chapter X of that Act, so far as they relate to surveys and the preparation of record-of-rights.

Bogra.—No. 11979 L. R.—20th August 1936.—In exercise of the powers conferred by section 3 of the Bengal Land Revenue Settlement Regulation, 1825 (IX of 1825), read with section 20 of the Bengal Land Revenue Settlement Regulation, 1822 (VII of 1822), the Governor in Council is pleased to vest Babu Jajneswar Majumdar, Settlement Kanungo, who has, by notification No. 11198-C.P., dated the 10th August 1936, been vested by the Board of Revenue with the powers of a Collector in the estate of Maharaja Shashi Kanta Acharjya Choudhuri in the district of Bogra, for the purpose of the work of maintenance of the record-of-rights of that estate, with powers under section 19 of the said Bengal Land Revenue Settlement Regulation, 1822, within the local limits of that estate, to require and compel persons mentioned in the section to attend and produce accounts and other papers and to examine such persons under that section for the purpose of the said work of the maintenance of the record-of-rights.

24-Parganas-Bogra.—No. 11989L.R.—20th August 1936.—Notification No. 11556 L.R., dated the 10th August 1936, published at page 1930, Part I of the *Calcutta Gazette* of the 13th *idem*, appointing Babu Satyendra Nath Das Gupta, Subdivisional Officer, to be the Manager, Joypur Government Estates, Bogra, is hereby cancelled.

Faridpur.—No. 11992 L.R.—20th August 1936.—In exercise of the power conferred by sub-section (*3*) of section 158A of the Bengal Tenancy Act, 1885 (Act VIII of 1885), the Governor in Council is pleased to appoint, for the purpose of that section, the Certificate Officer of Faridpur, Sadar, to perform the functions of a Certificate Officer under the Bengal Public Demands Recovery Act, 1913 (Bengal Act III of 1913), for the recovery of arrears of rent (including cesses) due to the following estates situated in the district of Faridpur:—

1. Estate of Babu Arun Chandra Sinha.
2. Estate of Mr. S. K. Mitter and others.
3. Estate of Maharaja Sir P. K. Tagore, Kt.

Midnapore.—No. 12041L.R.—21st August 1936.—In exercise of the power conferred by sub-section (*1*) of section 3 of the Bengal Agricultural Debtors Act, 1935 (Bengal Act VII of 1936), the Governor in Council is pleased to establish the undermentioned Debt Settlement Boards in the Sadar subdivision of the Midnapore district for the local areas respectively shown against each.

In exercise of the power conferred by sub-section (*1*) of section 40 of the said Act, read with rules 31 and 82 of the Bengal Agricultural Debtors Rules, 1936, the Governor in Council is pleased to appoint the Subdivisional Magistrate of Sadar, *ex-officio*, as Ordinary Appellate Officer and the senior munsif of Midnapore, *ex-officio*, as Special Appellate Officer for each of the said local areas :—

Name of Debt Settlement Board.		Name of union comprising the local area.
Chandra	..	Chandra.
Anandapur	..	Anandapur.
Salboni	..	Salboni.
Amlagora	..	Amlagora.
Shamrpur	..	Shamrpur.
Jamna	..	Jamna.
Sabong	..	Sabong.
Keshiary	..	Keshiary.
Mohanpur	..	Mohanpur.
Monoharpur	..	Monoharpur.
Belda	..	Belda.
Khelar	..	Khelar.

Name of Debt Settlement Board.	Names of mauzas comprising the local area, with jurisdiction list number of each mauza.	
Satbankura	Burisol	677
	Kuarkhal	688/938
	Buramara	688
	Simuldiha	691
	Kelami	690
	Sailara	689
	Metiadahar	707
	Kumari	681
	Andharia	708
	Nabakola	680
	Khandiband	671
	Dwarigeria	672
	Sat Bankura	673
	Bila	458
	Upar Janka	459
	Nam Janka	457
	Kuralganj	456
	Tuntbari	455
	Duki	453
	Arabari	452
	Chandmura	451
	Tilakkhula	678
	Mangalbandi	682
	Kucha Simul	683
	Beliaganj	685
	Nepura	686
	Bhogisol	687
	Kamarberia	684
	Hatikhana	679
	Guranga	676
	Dharampur	675
	Bara Kurya	674

Midnapore.—No. 12042L.R.—21st August 1936.—In exercise of the power conferred by sub-section (*1*) of section 3 of the Bengal Agricultural Debtors Act, 1935 (Bengal Act VII of 1936), the Governor in Council is pleased to establish the undermentioned Debt Settlement Boards in the Jhargram subdivision of the Midnapore district for the local areas respectively shown against each.

In exercise of the power conferred by sub-section (*1*) of section 40 of the said Act, read with rules 31 and 82 of the Bengal Agricultural Debtors Rules, 1936, the Governor in Council is pleased to appoint the Subdivisional Magistrate of Jhargram, *ex-officio*, as Ordinary Appellate Officer and the senior munsif of Midnapore, *ex-officio*, as Special Appellate Officer for the said local areas :—

Name of Debt Settlement Board.	Names of mauzas comprising the local area, with jurisdiction list number of each mauza.	
Sildah ..	Chhotobandi ..	237
	Kurchiboni ..	247
	Sahari ..	248
	Mujrakanali ..	249
	Jamda ..	250
	Panikanali ..	280
	Hijli ..	284
	Dhobasole ..	285
	Bhagaband ..	286
	Kamarda ..	291
	Mahatdanga ..	292
	Narainpur ..	293
	Muchiband ..	294
	Sildah ..	305
Beleberia ..	Ashui ..	565
	Shankrari ..	384
	Beleberia ..	564
	Ambi ..	563
	Kushmar ..	575
	Jhatiara ..	562
	Sirahi ..	561

Name of Debt Settlement Board.	Names of mauzas comprising the local area, with jurisdiction list number of each mauza.		
Beleboria—*concld.* ..	Kujrah	..	559
	Nakhra	..	576
	Kanthalia	..	582
	Bajari	..	581
	Johanpur	..	554
	Gohalmara	..	584
	Talgobra	..	578
	Tentulia	..	577
	Teghari	..	558
	Harki	..	555
	Parshana	..	573
	Rampura	..	572
	Dainmari	..	583
Gidni ..	Dhengbohara	..	42
	Dumuria	..	75
	Faguasol / Kaptuasolo	..	70
	Deogerya	..	69
	Salika	..	106
	Kherajuri	..	113
	Chandabila	..	109
	Charchaka	..	111
	Gidni	..	112
Chandri ..	Jogitota	..	786
	Petbindha	..	785
	Payrachali	..	779
	Dhansole	..	778
	Dhanghori	..	780
	Jangai Khas	..	784
	Chatarpada	..	783
	Sugnia	..	787
	Khas Jangal	..	782
	Jamda	..	819
	Kolshali	..	818
	Jamsole	..	815
	Alkusia	..	792
	Auspal	..	788
	Gobindapur	..	789
	Taldanga	..	790
	Boro Hakanda	..	791
	Kismat Hakanda	..	793
	Guji Hakanda	..	794
	Kalbetal	..	795
	Gangadharpur	..	814
	Majurisol	..	816
	Rajadihi	..	817
	Tulsiboni	..	812
	Chhar Paikan	..	813
	Pathra	..	797
	Asti	..	798
	Chandri	..	811
	Kumardoba	..	810
	Kalaboni	..	836
	Gunguni	..	839
	Bhakat Khulya	..	838
	Dhana Hula	..	837
	Fulsundari	..	849
	Chilki	..	848
	Bira	..	850
	Moraikhati	..	809
	Nayagram	..	808
	Sirishboni	..	807
	Bilat	..	852
	Dangram	..	851
	Malkari	..	847
	Buriband	..	857
	Gundrghura	..	858
	Bandarboni	..	856

Name of Debt Settlement Board.	Names of mauzas comprising the local area, with jurisdiction list number of each mauza.	
Chandri—*concld.* ..	Kanyaduba ..	855
	Gurgurisole ..	859
	Jhikra ..	867
	Matihana ..	866
	Sirishboni ..	865
	Bhandarikata ..	864
	Golaghutia ..	863
	Gokulpur ..	862
	Dohijuri ..	861
	Dhenbahara ..	869
	Salgura ..	854
	Ukta ..	853
	Barkala ..	806
	Feko ..	805
	Bansgerya ..	804
	Shyamkishorepur ..	803
	Jadavpur ..	802
	Tetaldanga ..	801
	Naghata ..	800
	Protappur ..	799

Midnapore.—No. 12043L R.—21st August 1936.—In exercise of the power conferred by sub-section (*1*) of section 3 of the Bengal Agricultural Debtors Act, 1935 (Bengal Act VII of 1936), the Governor in Council is pleased to establish the undermentioned Debt Settlement Boards in the Ghatal subdivision of the Midnapore district for the local areas respectively shown against each.

In exercise of the power conferred by sub-section (*1*) of section 40 of the said Act, read with rules 31 and 82 of the Bengal Agricultural Debtors Rules, 1936, the Governor in Council is pleased to appoint the Subdivisional Magistrate of Ghatal, *ex-officio*, as Ordinary Appellate Officer and the senior munsif of Midnapore, *ex-officio*, as Special Appellate Officer for each of the said local areas :—

Name of Debt Settlement Board.	Name of union comprising the local area
Jara ..	Jara.
Birsingha ..	Birsingha, excluding mauzas Raghunath Kunda, jurisdiction list No. 58 and Thakuranichak, jurisdiction list No. 61.

Name of Debt Settlement Board.	Names of mauzas comprising the local area, with jurisdiction list number of each mauza.	
Brahmanbasan ..	Sarberya ..	104
	Shulan ..	105
	Ratnapara ..	106
	Gangaprasad ..	107
	Kadirpur Fakirbazar ..	108
	Salampur ..	109
	Radhanagar ..	110
	Brahmanbasan ..	111
	Tatarpur ..	112
	Machhgerya ..	113
	Jotmuri ..	114
	Jot Bani ..	115
	Nabin Basudebpur ..	116
	Srirampur ..	117
	Damodarpur ..	118
	Gobindapur ..	119
	Janarddanpur ..	120
	Poshtanka ..	121
	Kritibaspur ..	122

Name of Debt Settlement Board.	Names of mauzas comprising the local area, with jurisdiction list number of each mauza.	
Brahmanbasan—*concld* ..	Uttar Dhankhal ..	123
	Dakshin Dankhal ..	124
	Makarampur ..	125
	Abhirampur ..	126
	Brindabanpur ..	127
	Debkul ..	128
	Jagannathbati ..	129
	Bar Kasimpur ..	130
	Saiadpur ..	131
	Godaipur ..	132
	Krishnanagar ..	133
	Anantapur ..	134
	Nabin Maheshpur ..	135
	Manikpur ..	136
	Dharmasagar ..	138

Midnapore.—No. 12044L.R.—21st August 1936.—In exercise of the power conferred by sub-section (*1*) of section 3 of the Bengal Agricultural Debtors Act, 1935 (Bengal Act VII of 1936), the Governor in Council is pleased to establish the undermentioned Debt Settlement Boards in the Contai subdivision of the Midnapore district for the local areas respectively shown against each.

In exercise of the power conferred by sub-section (*1*) of section 40 of the said Act, read with rules 31 and 82 of the Bengal Agricultural Debtors Rules, 1936, the Governor in Council is pleased to appoint the Subdivisional Magistrate of Contai, *ex-officio*, as Ordinary Appellate Officer and the senior munsif of Midnapore, *ex-officio*, as Special Appellate Officer for each of the said local areas :—

Name of Debt Settlement Board.	Name of union comprising the local area.
Basantia ..	Basantia.
Karanji ..	Karanji.
Egra ..	Egra.
Kajlagarh ..	Kajlagarh.
Kamarda ..	Kamarda

Name of Debt Settlement Board.	Names of mauzas comprising the local area, with jurisdiction list number of each mauza.	
Chistipur ..	Tal Chhitkini	182
	Chistipur Bheri	184
	Golara Bheri	185
	Golara Nij	187
	Rupadighi	186
	Rambasan	194
	Machhranka Nankar ..	196
	Sarbhum	197
	Dhankar	198
	Gopalbandh	199
	Bar Mukhal	183
	Chistipur	188
	Baruibar	189
	Chistipur Bheri	190
	Palparabheri	191
	Godaibheri	192
	Baruipur	193
	Palpara	195
	Sahapur	174

Midnapore.—No. 12045L.R.—21st August 1936.—In exercise of the power conferred by sub-section (*1*) of section 3 of the Bengal Agricultural Debtors Act, 1935 (Bengal Act VII of 1936), the Governor in Council is pleased to establish the undermentioned Debt Settlement Boards in the Tamluk subdivision of the Midnapore district for the local areas respectively shown against each.

In exercise of the power conferred by sub-section (*1*) of section 40 of the said Act, read with rules 31 and 32 of the Bengal Agricultural Debtors Rules, 1936, the Governor in Council is pleased to appoint the Subdivisional Magistrate of Tamluk, *ex-officio*, as Ordinary Appellate Officer and the senior munsif of Midnapore, *ex-officio*, as Special Appellate Officer for each of the said local areas :—

Name of Debt Settlement Board.		Name of union comprising the local area
Kola	..	Kola.
Bhogpur	..	Bhogpur.
Garh Kamalpur	..	Mahishadal.
Nandigram	..	Nandigram.

Name of Debt Settlement Board.		Names of mauzas comprising the local area, with jurisdiction list number of each mauza.		
Anandapur	..	Dakshin Ankha	..	206
		Gar Moyna	..	207
		Bansda	..	22
		Gar Safat	..	208
		Purba Dobandhi Patna	..	209
		Purba Dakshin Moyna	..	210
		Panchpukhuria	..	230
		Dakshin Moyna	..	211
		Anandapur	..	212
		Dakshin Horkuli	..	213
		Horkuli Bhandarchak	..	215
		Gopalchak	..	216
		Masumchak	..	226
		Shyamganja	..	252
Anantapur	..	Lalitageria	..	106
		Dakshin Baguyan	..	107
		Anantapur	..	108
		Haridaspur	..	109
		Kankurkhana	..	110
		Salika Bhupatichak	..	113
		Salika Garchak	..	116
		Damodarpur	..	114
		Asuda Paikbar	..	117
		Chak Kasmali	..	118
		Chak-Siru-Radha	..	119
		Nijjote Garupota	..	121
		Salika Dhanichak	..	122
		Laichanpur	..	123
		Barbariya Paikbar	..	124
		Barbariya	..	125
		Rajnagar	..	160
		Rajnagar Baharjala	..	161
Kasipur	..	Raynagar	..	8
		Agadoro	..	25
		Urddhab Mal	..	26
		Bahardob	..	28
		Dundipur	..	29
		Gopalpur	..	30
		Khanpur	..	31
		Kashipur	..	32
		Kharibere	..	33
		Durbabere	..	78
		Tajnagar	..	79
		Finga	..	80
		Gourangapur	..	81
		Tajpur	..	82
		Uttar-Basudebpur	..	126
		Fetehpur	..	109
		Ata-phala	..	112
		Golapchak	..	114
		Horkhali	..	115
		Begunbere	..	116
		Rupnarayanchak	..	117
		Saluk-khali	..	118
		Parbatipur	..	119

Midnapore.—No. 12046L.R.—21st August, 1936.—In exercise of the power conferred by sub-section (2) of section 3 of the Bengal Agricultural Debtors' Act, 1935 (Bengal Act VII of 1936), the Governor in Council is pleased to appoint the following persons to be Chairmen and members, respectively, of the undermentioned Debt Settlement Boards in the Midnapore district for a term of three years with effect from 15th July 1936:—

Sadar (North) subdivision.

Chandra Debt Settlement Board.

1. Maulvi Abu Ahmed, Member and Chairman.

Members.

2. Dr. Debendra Nath De.
3. Maulvi Lutfar Rahaman.

Anandapore Debt Settlement Board.

1. Babu Ananta Chandra Bag, Member and Chairman.

Members.

2. Babu Radha Krishna Hazra.
3. Babu Surendra Nath Guin.

Salboni Debt Settlement Board.

1. Babu Ashutosh Mondal, Member and Chairman.

Members.

2. Babu Panchanan Ghosh.
3. Babu Sudharam Mandal.

Amlagora Debt Settlement Board.

1. Babu Narayan Chandra Ghosh, Member and Chairman.

Members.

2. Babu Fakir Chandra Dutt.
3. Swami Sailananda.

Satbankura Debt Settlement Board.

1. Babu Sarat Chandra Bose, B.A., Member and Chairman.

Members.

2. Babu Mihir Chandra Guin.
3. Babu Narayan Chandra Pramanik.

Shampur Debt Settlement Board.

1. Babu Mahadeb Tripathy, Member and Chairman.

Members.

2. Babu Parikshit Khanra.
3. Babu Kula Chandra De.

Sadar (South) subdivision.

Jamna Debt Settlement Board.

1. Babu Dhirendra Nath Hazra, Member and Chairman.

Members.

2. Babu Bhubon Chandra Jana.
3. Babu Bihary Lal Majhi.

Sabang Debt Settlement Board.

1. Maulvi Alauddin Ahmed, Member and Chairman.

Members.

2. Babu Radhanath Sith.
3. Babu Kunja Behari Jana.

Keshiary Debt Settlement Board.

1. Dr. Nalini Bihari Pati, Member and Chairman.

Members.

2. Babu Surendra Nath Kar.
3. Babu Govinda Prosad Dutt.

Mohanpur Debt Settlement Board.

1. Choudhury Bon Behari Kar Mohapatra, Member and Chairman.

Members.

2. Babu Narayan Chandra Paricha.
3. Sheik Abdul Latif.

Monoharpur Debt Settlement Board.

1. Babu Suresh Chandra Roy Birbar, Member and Chairman.

Members.

2. Babu Bidyadhar De.
3. Babu Sudhangsu Mohan Roy.

Belda Debt Settlement Board.

1. Babu Bijoy Krishna Laha, Member and Chairman.

Members.

2. Babu Upendra Nath Mahapatra,
3. Dr. Charu Chandra Das-Gupta.

Khelar Debt Settlement Board.

1. Babu Rati Nath Bose, Member and Chairman.

Members.

2. Babu Krisna Chandra Satpati.
3. Babu Pearylal Das.

Ghatal subdivision.

Jara Debt Settlement Board.

1. Babu Fatik Chandra Chakraborty, Member and Chairman.

Members.

2. Babu Birendra Nath Mandal.
3. Babu Surya Kumar Mukerji.

Brahmanbasan Debt Settlement Board.

1. Babu Lalit Mohan Mondal, Member and Chairman.

Members.

2. Babu Radha Nath Masanta.
3. Babu Bhupati Charan Subid.

Birsingha Debt Settlement Board.

1. Babu Parbati Chandra Chakraverty, Member and Chairman.

Members.

2. Babu Ashutosh Singha.
3. Babu Jogendra Nath De.

Tamluk subdivision.

Anantapur Debt Settlement Board.

1. Khan Sahib Abdul Hakim, Member and Chairman.

Members.

2. Babu Behari Panja.
3. Babu Narendra Roy Choudhury.

Kola Debt Settlement Board.

1. Babu Sarat Chandra Chakraverti, Member and Chairman.

Members.

2. Babu Satish Chandra Basu.
3. Babu Swarajit Kumar Chatterji.

Bhogpur Debt Settlement Board.

1. Babu Upendra Kishore Samanta Roy, Member and Chairman.

Members.

2. Babu Gopinath Sow.
3. Maulvi Mejahar Ali.

Anandapur Debt Settlement Board.

1. Babu Herambananda Bahubalindra, Member and Chairman.

Members.

2. Babu Mahendra Maity.
3. Babu Giris Chandra Das.

Garhkamalpur Debt Settlement Board.

1. Babu Kalipada Ghose, Member and Chairman.

Members.

2. Babu Protap Chandra Mondal.
3. Babu Ram Krista Das.

Nandigram Debt Settlement Board.

1. Babu Mahendra Roy, Member and Chairman.

Members.

2. Babu Hrishikesh Jana.
3. Babu Bhagyadhar Manna.

Kasipur Debt Settlement Board.

1. Babu Giris Bhunia, Member and Chairman.

Members.

2. Babu Bhut Nath Pramanik.
3. Babu Atul Bera, B.A.

Contai subdivision.

Basantia Debt Settlement Board.

1. Rai Sahib Chandra Mohan Agasti, Member and Chairman.

Members.

2. Babu Dhruba Charan Jana.
3. Babu Lambodar Misra.

Karanji Debt Settlement Board.

1. Babu Radhashyam Das Mahapatra, Member and Chairman.

Members.

2. Babu Probhat Chandra De.
3. Babu Nikunja Behari Das.

Egra Debt Settlement Board.

1. Dr Birendra Nath Das Gupta, Member and Chairman.

Members.

2. Babu Lal Mohan Maity.
3. Babu Adwitta Charan Maity.

Chistipur Debt Settlement Board.

1. Babu Iswar Chandra Mahapatra, Member and Chairman.

Members.

2. Babu Satish Chandra Maity.
3. Dr. Rajani Kanta Sahoo.

Kajlagarh Debt Settlement Board.

1. Babu Benoy Krishna Choudhury, Member and Chairman.

Members.

2. Babu Gora Chand Prodhan.
3. Babu Dinanath De.

Kamarda Debt Settlement Board.

1. Babu Jagadish Chandra Maity, Member and Chairman.

Members.

2. Babu Ramapati Maity.
3. Babu Gunadhar Prodhan.

Jhargram subdivision.

Silda Debt Settlement Board.

1. Babu Purna Chandra Laha, Member and Chairman.

Members.

2. Babu Upendra Nath Mazumder.
3. Babu Mansaram Nandi.

Beleberia Debt Settlement Board.

1. Babu Girindra Mohan Bhattacharjya, Member and Chairman.

Members.

2. Babu Nagendra Nath Mahapatra.
3. Babu Narendra Nath Sen.

Gidney Debt Settlement Board.

1. Rai Sahib A. L. Mitra, Member and Chairman.

Members.

2. Babu Iswar Chandra Satpati.
3. Babu Prohlad Chandra Das.

Chandri Debt Settlement Board.

1. Babu Ajodhya Nath Hota, Member and Chairman.

Members.

2. Babu Debendra Nath Sau.
3. Babu Bepin Behari Sing.

Jalpaiguri.—No. 12071 L.R.—22nd August 1936.—In exercise of the powers conferred by section 115B of the Bengal Tenancy Act, 1885 (Act VIII of 1885), the Governor in Council is pleased to empower Mr. R. H. Hutchings, C.I.E., I.C.S., Deputy Commissioner of Jalpaiguri, to make corrections in the record-of-rights prepared in respect of those lands in that district where the Bengal Tenancy Act applies, in accordance with, and subject to, the provisions of the said section.

Howrah. — No. 12090L.R.—24th August 1936. — Under the provisions of section *3(14)* of the Bengal Tenancy Act, 1885 (Act VIII of 1885), Babu Profulla Chandra Maulik, Settlement Kanungo, is authorised to discharge, in the district of Howrah, the functions of a Revenue Officer, under Chapter X of that Act, so far as they relate to surveys and the preparation of record-of-rights.

Bakarganj.—No. 12092L.R.—24th August 1936.—In exercise of the powers conferred by section 115B of the Bengal Tenancy Act, 1885 (Act VIII of 1885), the Governor in Council is pleased to empower Mr. Abanibhushan Chattarji, I.C.S., Assistant Settlement Officer, Bakarganj, to make corrections in the record-of-rights prepared in respect of the lands in that district, in accordance with, and subject to, the provisions of the said section.

Land Acquisition.

NOTIFICATIONS.

24-Parganas-Dacca.—No. 11800L.A.—18th August 1936.—Babu Dinesh Chandra Gupta, Deputy Magistrate and Deputy Collector, Dacca, is appointed temporarily to be the Special Land Acquisition Officer at Alipore, district 24-Parganas, with effect from the date on which he joins the appointment, and he is vested with the powers of a Collector under the Land Acquisition Act (I of 1894) in the district of 24-Parganas.

Chittagong.—No. 11972L.A.—20th August 1930.—The Governor in Council is pleased to cancel so much of the notification No. 1471-L.A., dated the 31st January 1936, under section 4 of the Land Acquisition Act, 1 of 1894, published at page 317, Part I of the *Calcutta Gazette* of the 6th February 1936, in respect of acquisition of land for the extension of landing ground and construction of its approach road in the village of East Patenga, police-station Double Moorings, district Chittagong, as relates to 8·91 acres of land comprising the part of revisional survey plots Nos. 377, 378, 381, 383, 393, 396, 402, 405, 406, 409, 410, 411, 412, 413, 761, 762, 887, 930, 1156, 1158, 1159, 1225, 1226, 1227 and 1332 and portions of part plots Nos. 758, 760, 868, 898, 900, 910, 911, 912, 913, 914, 915, 923, 924, 927, 928, 933, 934, 939, 940, 941, 942, 949, 956, 961, 962, 966, 967, 971, 972, 976, 977, 981, 982, 983, 984, 987, 988, 991, 993, 1160, 1304, 1320, 1321, 1322, 1323, 1324, 1327, 1333, 1334 and 1359.

Tippera.—No. 11981L.A.—20th August 1936.—The Governor in Council is pleased to cancel the notification No. 9324 L.A., dated the 12th July 1935, under section 4 of the Land Acquisition Act, I of 1894, published at page 1370, Part I of the *Calcutta Gazette* of the 18th July 1935, in respect of the proposed acquisition of 0·13 of an acre of land required for the construction of union board office at Daudkandi in the village of Noakandi in the district of Tippera.

Chittagong.—No. 11987L.A.—20th August 1936.—Mr. Abul Fazal Muhammad Mohsin Ali, Sadar Subdivisional Officer, Chittagong, is vested with the powers of a Collector under the Land Acquisition Act, I of 1894, in that subdivision.

Murshidabad.—No. 12074L.A.—22nd August 1936.—The Governor in Council is pleased to cancel the notification No. 5761 L.A., dated the 18th April 1935, under section 4 of the

Land Acquisition Act, I of 1894, published at page 770, Part I of the *Calcutta Gazette* of the 25th April 1935, in respect of the proposed acquisition of 0·082 of an acre of land required by the Aurangabad union board for a cattle pound in the village of Dafahat, police-station Suti, pargana Mangalpur, zilla Murshidabad.

Burdwan.—No. 12077L.A.—22nd August 1936.—Whereas it appears to the Governor in Council that land is likely to be required to be taken by Government at the public expense for a public purpose, viz., for the 37th mile of the Damodar left embankment in the village of Sarengpur, jurisdiction list No. 31, thana Jamalpur, pargana Haveli, district Burdwan, it is hereby notified that for the above purpose a piece of land comprising cadastral plot Nos. 1208, 1210, 1212 and 1213, and measuring, more or less, 1·16 acres, is likely to be required within the aforesaid village of Sarengpur.

This notification is made, under the provisions of section 4 of Act I of 1894, to all whom it may concern.

A plan of the land may be inspected in the office of the Special Land Acquisition Officer, Burdwan, as well as in that of the Executive Engineer, Damodar Division, Calcutta.

In exercise of the powers conferred by the aforesaid section, the Governor in Council is pleased to authorise the officers for the time being engaged in the undertaking, with their servants and workmen, to enter upon and survey the land and do all other acts required or permitted by that section.

Any person interested in the above land, who has any objection to the acquisition thereof, may, within thirty days after the date on which public notice of the substance of this notification is given in the locality, file an objection in writting before the Collector of Burdwan.

24-Parganas.—No. 12087L A.—24th August 1936.—Whereas it appears to the Governor in Council that land is likely to be required to be taken by Government at the expense of the Calcutta Medical Aid and Research Society for the extension of the Jadabpur Tuberculosis Hospital and for the treatment of the sick and convalescent, in the village of Jadabpur, jurisdiction list No. 35, thana Tollygunge, pargana Khashpur, district 24-Parganas, it is hereby notified that for the above purpose a piece of land comprising cadastral plots Nos. 191, 192, 193, 194 and 237 and measuring, more or less, 1·92 acres, is likely to be required within the aforesaid village of Jadabpur.

This notification is made, under the provisions of section 4 of Act I of 1894, to all whom it may concern.

A plan of the land may be inspected in the office of the Land Acquisition Deputy Collector, 24-Parganas.

In exercise of the powers conferred by the aforesaid section, the Governor in Council is pleased to authorise the officers for the time being engaged in the undertaking with their servants and workmen, to enter upon and survey the land and do all other acts required or permitted by that section

Any person interested in the above land, who has any objection to the acquisition thereof, may, within thirty days after the date on which public notice of the substance of this notification is given in the locality, file an objection in writing before the Collector of the 24-Parganas.

ERRATA.

Chittagong.—No. 11975L.A.—20th August 1936.—In the notification No. 1471L.A., dated the 31st January 1936, under section 4 of the Land Acquisition Act, 1 of 1894, published at page 317, Part I of the *Calcutta Gazette* of the 6th February 1936, in respect of the proposed acquisition of 63·23 acres of land required for the extension of landing ground and construction of its approach road in the village of East Patenga, police-station Double Mooring, zilla Chittagong, *read* "936 (full plot)" *for* "966 (full plot)" in line 14; *read* "1351 and 1252 (part plots)" *for* "1188 and 1152 (part plots)," respectively, and *read* "1281 (full plot) and 1257 (part plot)" *for* "1284 (part plot)" in line 20; *read* "1291 and 1293 (part plots)" *for* "1291 (part plot)" in line 22; *read* "955 (full plot)" *for* "955 (part plot)" in line 27; and *delete* "949" and "961 (part plots)" in lines 24 and 27, respectively.

24-Parganas.—No. 11984L.A.—20th August 1936.—In line 7 of notification No. 6916 L.A., dated the 1st May 1936, under section 4 of the Land Acquisition Act, published at pages 1064 and 1065, Part I of the *Calcutta Gazette* of the 7th idem, in respect of the proposed acquisition of land required by the Kanchrapara Municipality for a road to connect Eastern Bengal Railway land with Col. Gupta Road in the villages of Halisahar and Jetia, jurisdiction list Nos. 6 and 16, respectively, thana Bijpur, pargana Haveli-sahar, district 24-Parganas, *read* "Col." *for* "Colu."

Excluded Area.

NOTIFICATIONS.

Darjeeling.—No. 11817E.A.—18th August 1936.—In exercise of the power conferred by sub-section (*1*) of section 24 of the Bengal Municipal Act, 1932 (Bengal Act XV of 1932), as modified in its application to the district of Darjeeling, the Governor in Council is pleased to fix Friday, the 18th December 1936, as the date for holding the first general election of the Commissioners of the Kurseong Municipality.

2. This cancels notification No. 534T.R., dated the 18th May 1936 published at page 1449, Part I of the *Calcutta Gazette* of the 18th June 1936.

No 12057E.A.—22nd August 1936.—In exercise of the powers conferred by section 20 of the Bengal Food Adulteration Act, 1919 (Bengal Act VI of 1919), the Governor in Council is pleased to make the following amendment in the rules issued with notification No. 12987 Ex.A., dated the 5th December 1934, published at pages 1937-1938, Part I of the *Calcutta Gazette* of the 13th December 1934 :—

Amendment.

After items (*1*) and (*5*) of the notification referred to above, *insert* the following as items (*2*) and (*6*), respectively, and *renumber* the other items :—

" (2) *Dahi*.

(*a*) Where a sample of *dahi* derived from cow's milk contains less than 3·5 per cent. of milk fat, it shall be presumed, until the contrary is proved for the purposes of the Act, that the *dahi* is not genuine by reason of the abstraction therefrom of milk fat or the addition thereto of water.

(*b*) Where a sample of *dahi* derived from buffalo's milk contains less than 6 per cent. of milk fat, it shall be presumed, until the contrary is proved for the purposes of the Act, that the *dahi* is not genuine by reason of the abstraction therefrom of milk fat or the addition thereto of water.

(6) *Ata*.

Where the proportion of ash in a sample of *ata* exceeds 2·5 per cent. calculated on dried substance, *i.e.*, dried to constant weight at 100°c., it shall be presumed, until the contrary is proved for the purposes of the Act, that the *ata* is not genuine by reason of the excessive amount of extraneous mineral matter therein."

No. 12061E.A.—22nd August 1936.—In exercise of the powers conferred by clause (*f*) of sub-section (*1*) of section 6 of the Bengal Food Adulteration Act, 1919 (Bengal Act VI of 1919), the Governor in Council is pleased to notify the following as articles of food in addition to the article mentioned in notification No. 12988 Ex. A., dated the 5th December 1934, published at page 1938, Part I, of the *Calcutta Gazette* of the 13th December 1934, and to prescribe the conditions mentioned against each such article which must be fulfilled if such article is to be sold or exposed or hawked about for sale or manufactured or stored for sale in the district of Darjeeling, viz :—

(1) *Dahi* derived from cow's milk or buffalo's milk shall contain not less than 3·5 per cent. or 6 per cent. of milk fat, respectively.

(2) *Ata* shall contain not more than 2·5 per cent. of ash.

No. 12065 E A.—22nd August 1936.—In exercise of the power conferred by section 4 of the Bengal Food Adulteration Act, 1919 (Bengal Act VI of 1919), the Governor in Council is pleased to declare that the normal constituents of the articles of food named below are those specified against each such article, namely :—

Dahi is the product obtained by lactic acid fermentation of the pure milk of cow or buffalo and shall have the same percentage of fat as the milk from which it is derived.

Ata is the coarse product obtained by milling and sieving wheat and shall contain not more than 2·5 per cent of ash calculated on the dried substance, *i.e.*, dried to constant weight at 100°c.

ERRATA.

No. 11913E.A.—19th August 1936.—In paragraph 2 of the notifications mentioned below, published at pages 1449-1507, Part I of the *Calcutta Gazette* of the 18th June 1936, *for* the words "15th July 1936" *substitute* the words "15th September 1936" :—

Notifications Nos. 7865 E.A., 7869 E.A., 7873 E.A., 7877 E.A., 7882 E.A., 7886 E.A., 7890 E.A., 7894 E.A., 7898 E.A., 7902 E.A., 7906 E.A., 7912 E.A., 7917 E.A., 7923 E.A., and 7927 E.A., dated the 22nd May 1936.

No. 11917E.A.—19th August 1936.—In paragraph 2 of notification No. 908 T.R., dated the 19th June 1936, published at pages 1654-55, Part I, of the *Calcutta Gazette* of the 2nd July 1936, *for* the words "20th July 1936" *substitute* the words "15th September 1936."

Excise.

NOTIFICATIONS.

Minister-in-charge: The Hon'ble Sir Bijoy Prasad Singh Roy, Kt.

No. 878Ex.—25th August 1936.—In exercise of the powers conferred by section 27 of the Bengal Excise Act, 1909 (Bengal Act V of 1909), the Government of Bengal (Ministry of Excise) are pleased to direct that, with effect from the 1st September 1936, duty shall be imposed on country spirit in the following areas at the rates respectively specified below, as an experimental measure for six months, or until further orders, when transported from any distillery or excise warehouse in Bengal to the premises of a licensed retail vendor :—

Area.	Rates of duty per Imperial gallon of the strength of—						
	25°U.P.	30°U.P.	40°U.P.	55°U.P.	60°U.P.	70°U.P.	75°U.P.
	Rs. a p	Rs. a. p.	Rs. a p.	Rs. a p	Rs. a p.	Rs. a p	Rs. a. p.
Burdwan.							
Area supplied by Carew & Co.—Asansol subdivision only ..	..	6 6 0	..	..	2 3 9	..	..
Hooghly							
Area supplied by D Waldie & Co —Industrial area Thana Serampore exclusive of the villages of Khalsini, Nabagram, Jugipukur and Mankundu in the Bhadreswar outpost	10 4 6	..	7 7 6	4 10 3	..	2 7 6	..
Howrah.							
Area supplied by D Waldie & Co.—Industrial area Thana Uluberia of Uluberia subdivision.	10 4 6		7 7 6	4 10 3	.	2 7 6	..
Area supplied by Haji Ismail Salt & Sons, Ltd.—Industrial area Sadar subdivision and thana Bauria of Uluberia subdivision.	10 8 0	..	7 10 3	4 12 3	..	2 8 9	..
24-Parganas.							
Area supplied by Haji Ismail Salt & Sons, Ltd.—Industrial area. Thanas Metiabruz, Maheshtola, Behala, Tollygunge and Budge-Budge in Sadar subdivision.	10 8 0	..	7 10 3	4 12 3	..	2 8 9	..
Area supplied by D. Waldie & Co.—Industrial area. Barrackpore subdivision.	10 4 6	..	7 7 6	4 10 3	..	2 7 6	..
Calcutta.							
Whole district supplied by Haji Ismail Salt & Sons, Ltd. ..	10 8 0	..	7 10 3	4 12 3	..	2 8 9	..
Jalpaiguri.							
Whole district supplied by Carew & Co., except as shown below	..	6 6 0	..	..	2 3 9	..	..
Area served by all shops in Jalpaiguri district on the east side of the Teesta, including the three shops in British Chit belonging to Jalpaiguri and bounded on all sides by Cooch Behar boundary—supplied by Carew & Co	..	6 6 0	..	..	2 3 9	..	0 11 6
Darjeeling							
Whole district supplied by Carew & Co., except as shown below		6 6 0	..	..	2 3 9	..	0 13 3
Area served by shops at Singia, Ladoma, Sukiapukri, Mirik, Panighata, Nanalbari, Khoribari, Phansidewa, Teesta Bridge, Kalimpong, Algarah (and at Pedang on hat days)—supplied by Carew & Co.	..	6 6 0		.	2 3 9	..	0 10 3

No. 879Ex.—25th August 1936.—In exercise of the power conferred by section 86, clause (2) of the Bengal Excise Act, 1909 (Bengal Act V of 1909), the Government of Bengal (Ministry of Excise) are pleased to direct that with effect from the 1st September 1936, country spirit shall be sold by the retail vendors thereof in the areas specified below at the strengths and at prices not in excess of or below those specified against each area, as an experimental measure for six months or until further orders :-

Area.	Fixed retail price per Imperial gallon of the strength of—						
	25°U.P.	30°U.P.	40°U P.	55°U.P.	60°U P.	70°U.P.	75°U.P.
	Rs. a. p.	Rs a p	Rs. a. p.	Rs a. p.	Rs. a. p.	Rs a p.	Rs. a p.
Burdwan.							
Area supplied by Carew & Co.- Asansol subdivision only .	..	10 6 9	..	..	5 3 0	.	..
Hooghly.							
Area supplied by D Waldie & Co.—Industrial area Thana Serampore exclusive of the villages of Khalsini, Nabagram, Jugipukur and Mankundu in the Bhadreswar outpost.	15 10 0	.	11 12 0	8 4 0	..	4 12 0	..
Howrah.							
Area supplied by D. Waldie & Co.--Industrial area Thana Uluberia of Uluberia subdivision.	15 10 0	..	11 12 0	8 4 0	..	4 12 0	..
Area supplied by Haji Ismail Salt & Sons, Ltd.—Industrial area. Sadar subdivision and thana Bauria of Uluberia subdivision.	15 10 0	..	11 12 0	8 4 0	..	4 12 0	..
24-Parganas							
Area supplied by Haji Ismail Salt & Sons, Ltd --Industrial area Thanas Metiaburuz, Maheshtola, Behala, Tollygunge and Budge Budge in Sadar subdivision.	15 10 0	.	11 12 0	8 4 0	..	4 12 0	..
Area supplied by D. Waldie & Co. Industrial area. Barrackpore subdivision.	15 10 0	..	11 12 0	8 4 0	..	4 12 0	..
Calcutta.							
Whole district supplied by Messrs. Haji Ismail Salt & Sons	15 10 0	..	11 12 0	8 4 0	..	4 12 0	..
Jalpaiguri.							
Whole district supplied by Carew & Co., except as shown below.	.	10 6 9	.	..	5 3 0	..	.
Area served by all shops in Jalpaiguri district on the east side of the Teesta including the three shops in British Chit belonging to Jalpaiguri and bounded by Cooch Behar boundary supplied by Carew & Co.	..	10 6 9	..	..	5 3 0	..	1 15 3
Darjeeling.							
Whole district supplied by Carew & Co., except as shown below.	..	10 6 9	..	..	5 3 0	..	2 8 0
Area served by shops at Singla, Lacloma, Suktapokri, Mirik, Panighata, Nazalbari, Khoribari, Pangsidewa, Teesta Bridge, Kalimpong Algarh (and at Pedang on hat days) supplied by Carew & Co.	..	10 6 9	..	..	5 3 0	..	1 15 3

J. B. KINDERSLEY,
Secy. to the Govt. of Bengal (offg.).

Orders by the Commissioner of Excise and Salt, Bengal.

No. 30Ex.—18th August 1936.—Babu Jitendra Nath Pal, temporary Inspector of Excise and Salt, employed on Matches (Excise) Work in Calcutta, has been allowed to perform the duties of an Inspector of Excise and Salt, Detection Branch, Calcutta, in addition to his own duties with effect from the 18th April 1936.

No. 31Ex.—20th August 1936.—Babu Niharranjan Nandy, Inspector of Excise and Salt, Calcutta, is allowed leave on average pay for eleven days, with effect from 5th August 1936, under rule 81 (*b*) (*ii*) of the Fundamental Rules.

No. 32Ex.—20th August 1936.—Babu Jitendra Nath Pal, temporary Inspector of Excise and Salt, employed on Matches (Excise) work in Calcutta, is allowed earned leave for twenty-seven days, with effect from the 21st September 1936, under rule 11 (*a*) of the Bengal Service (Revision of Leave) Rules, 1934. He is, on the expiry of his leave, likely to return to his old post.

A. S. LARKIN,
Commr. of Excise and Salt, Bengal (offg.).

BOARD OF REVENUE, BENGAL.

NOTIFICATION.

Bakarganj.—No. 11819C.P.—20th August 1936.—In exercise of the powers conferred by clause (*2*) of section 8 of the Bengal Land Revenue (Assistant Collectors) Regulation, 1821 (IV of 1821), the Board of Revenue authorises Babu Naresh Chandra Pal, Settlement Kanungo, who has been placed on duty in connection with the maintenance, for the purposes of section 158A of the Bengal Tenancy Act, 1885, of the record-of-rights of the estate of Maulvi Majub Ali Choudhuri and in the estate of Babu Narendra Nath Mitra in the district of Bakarganj, to exercise and perform within the local limits of the said estate any of the powers and duties vested in the Collectors of Land Revenue under any enactment in force therein for the purpose of the said work of maintenance of the record-of-rights.

This cancels notification No. 10734C.P., dated the 3rd August 1936.

S. BANERJEE,

Secy. to the Board of Revenue, Bengal.

CUSTOM HOUSE, CALCUTTA.

Custom House, Calcutta, the 20th August 1936.

Custom House Agents.

The following rules are prescribed for the grant of Clearing Agents' licenses under section 202 of the Sea Customs Act. These rules and any amendments thereto made from time to time shall apply to all Clearing Agents irrespective of the dates on which their licenses are issued unless the Collector of Customs specially exempts any of the Clearing Agents holding a permanent or provisional license on the date of issue of these rules from the operation of any of the rules:—

1. The number of licenses granted to Clearing Agents will ordinarily be limited to 150 but the Collector of Customs reserves to himself the right of increasing or reducing the number at any time. Vacancies will be filled up as they occur, or once in six months, according to the convenience of the Department, the selected candidate being approved by the Collector.

2. Ordinarily licenses will be granted only to firms or individuals of established position. When a firm or individual applies for a license the following conditions must be satisfied before the applicant's claim can be considered:—

(1) There must be a vacancy on the list.

(2) The applicant must be one whose respectability and reliability is fully vouched for by persons well-known to the Department and must produce at least two certificates of character.

(3) The financial position of the applicant must be thoroughly satisfactory.

(4) The applicant must produce letters from at least six firms of standing expressing their readiness to employ the applicant as a Clearing Agent in Calcutta.

(5) The applicant must agree either to work personally or through a licensed sircar or to employ a person as clerk to be approved by the Department.

(6) The applicant must possess a fair knowledge of English, Bengali and/or Hindustani and also of the Custom House rules and procedure.

3. As a guarantee of his faithful behaviour as regards the Custom House regulations and officers, a Clearing Agent will be required to

deposit Rs. 500 in the Post Office Savings Bank and to pledge the Pass Book to the Collector of Customs and to execute a bond for the amount of deposit in the prescribed form (form I). In addition, every Clearing Agent will be required to furnish another bond (form II), with suitable surety for Rs. 500, or alternatively to make a cash deposit of Rs. 1,000 instead of Rs. 500.

4. A Clearing Agent who has executed a bond in form II must furnish the Collector of Customs every twelve months with a letter signed by the surety stating his willingness to continue to act as security. This will not dispense with the appearance of the surety in person every three years.

5. The Clearing Agent must sign an agreement to bring to the notice of the Collector of Customs the death or insolvency of the surety or his inability satisfactorily to continue his obligations.

6. One Clearing Agent will be allowed to stand security for another provided he can satisfy the Collector of Customs that he has sufficient property to cover his liability and one person will be allowed to stand security for more than one Clearing Agent provided he has sufficient property to enable him to stand security for those Clearing Agents.

7. A Clearing Agent may employ clerks according to the volume of his business subject to the following conditions:—

(1) that the extent of the Clearing Agents' business necessitates the employment of a clerk or clerks,

(2) that the person nominated is of satisfactory character and sufficient education and possesses sufficient knowledge of Customs procedure,

(3) that the Clearing Agent acknowledges responsibility for his clerk's actions.

Such clerks will be licensed under section 203 of the Sea Customs Act.

8. Clearing Agents will be held responsible for seeing that all documents prepared or presented by them are strictly in accordance with the orders relating thereto.

9. Clearing Agents will be required to maintain accounts and submit them for inspection in such form and manner as may be directed from time to time. Misconduct or failure to maintain accounts or to submit them for inspection whenever required will render the license of a Clearing Agent liable to suspension or cancellation.

10. A Clearing Agent's license is also liable to cancellation if the Collector of Customs is satisfied at any time that the volume of work done by him is negligible. A Clearing Agent's license is not transferable by sale or otherwise. Any transfer or attempt at transfer will render the license immediately invalid.

11. The grant of licenses under these rules does not confer a right to accommodation in the Custom House.

G. N. BOWER,
Collector of Customs.

Form No. I.

No. of 193 .

KNOW all men by these presents that we are held and firmly bound to His Majesty's Secretary of State for India in Council (hereinafter called the Secretary of State) in the sum of Rs. for payment whereof we hereby bind ourselves and each of us bindeth himself our and each of our heirs executors and administrators firmly by these presents dated this day of in the year of Christ one thousand nine hundred and

Whereas the said has been licensed to act as a Custom House agent under section 202 of the Act VIII of 1878 and the said has agreed to enter with him into this bond as required by such section and Whereas the said has deposited the sum of Rs. with the Secretary of State as security for his faithful behaviour and that of his clerks and servants as regards the Custom House regulations and officers.

Now the condition of the above-written bond is such that if the said and his clerks and servants do at all times whilst holding such license as aforesaid behave themselves in a faithful and incorrupt manner as regards the Custom House regulations and its officers and if the said and their executors or administrators some or one of them do and shall at all times make good to the Secretary of State all and every sums of money which being due to the Government shall by reason of the misfeasance or negligence of the said or of his clerks or servants have been not paid to the said Secretary of State then the above-written bond shall be void; otherwise the same shall be and remain in full force and virtue and it is hereby agreed and declared that the Secretary of State may apply the said sum of Rs. deposited as aforesaid in making good to the Secretary of State all and every sums due to the Government by reason of the misfeasance or negligence of the said or of his clerks or servants as aforesaid And it is lastly hereby agreed that the said sum of Rs. shall remain with the Secretary of State for six calendar months after the date upon which the said shall cease to act as a Custom House agent as security for the payment of any sums due to the Government by reason of any misfeasance or negligence of the said or of his clerks or servants which may not be discovered until after the said date and that this bond shall be and remain in full force and virtue until the expiration of the said term of six months.

Signed, sealed and delivered by the above-named in the presence of witnesses . Executed before me this day of 193 .

Collector of Customs.

Form No. II.

(Form of surety bond to be taken from the clearing agents under section 202 of the Sea Customs Act.)

No. of 193 .

KNOW all men by these presents that we (A) and (B) are held and firmly bound to His Majesty's Secretary of State for India in Council (hereinafter called the Secretary of State) in the sum of Rs. 500 (Rupees five hundred only) for payment whereof we hereby bind ourselves and each of us bindeth himself our and each of our heirs, executors and administrators firmly by these presents dated this day of in the year of Christ one thousand nine hundred and

Whereas the said (A) has been licensed to act as a clearing agent under section 202 of Act VIII of 1878 and the said (B) has agreed to enter with him into this bond as required by such section.

Now the condition of the above-written bond is such that if the said (A) doth at all times whilst holding such license as aforesaid behave himself in a faithful and incorrupt manner as regards the Custom House regulations and its officers, and if the said (A) and (B) their executors or administrators some or one of them do, and shall at all times make good to the Secretary of State all and every sums of money which being due to the Government shall by reason of the misfeasance or negligence of the said (A) have been not paid to the said Secretary of State then the above-written bond shall be void; otherwise shall be and remain in full force and virtue.

Signed, sealed and delivered by the above-named in the presence of witnesses . Executed before me this day of 193 .

Collector of Customs.

TREASURY NOTICE.

Orders by the Deputy Accountant-General, Bengal.

The Treasury Buildings, the 22nd August 1936.

It is notified that the refund order book No. 181 containing 50 orders "Pink" is in use by the Income-Tax Office, Railways and Miscellaneous Salaries Circles, Calcutta, with effect from the 14th August 1936.

C. BHASKARAIYA,
Dy. Accts.-Genl., Bengal.

HIGH COURT NOTICES.

English Department—Civil.

The 20th August 1936.

No. 18976C.—The Hon'ble the Chief Justice has been pleased to grant Babu Basanta Kumar Banerji, Deputy Magistrate and Deputy Collector now on special duty in the High Court, leave on average pay for six days, under rule 81 (*b*) (*ii*) of the Fundamental Rules, with effect from the 10th to the 15th August, with permission to prefix the 9th and affix the 16th August, 1936.

English Department.

The 19th August, 1936.

No. 18882A.—Babu Subodh Chandra Mukharji, munsif, under orders of transfer to Dubrajpur, in the district of Birbhum, is vested with the powers of a Judge of a Court of Small Causes for the trial of suits cognizable by such a Court up to the value of Rs. 100 within the local limits of the Dubrajpur munsifi.

By order of the High Court,
E. S. STUPSON, *Registrar.*

Original Side.

Calcutta, the 22nd August 1936.

In continuation of the notification, dated the 14th November 1935, published in the *Calcutta Gazette*, dated 21st November 1935, Part I, page 2081, the Hon'ble the Chief Justice has been pleased to confirm Mr. Krishna Lal Dutt, Attorney-at-Law, as Assistant Registrar, High Court, Original Side, on Rs. 300, with effect from 11th November 1935.

The above appointment will be subject to the order of the Hon'ble the Chief Justice of Bengal, dated 22nd March 1933.

By order,
A. L. COLLET, *Registrar.*

ORDERS BY COMMISSIONERS OF DIVISIONS.

Burdwan Division—Chinsura.

No. 4907J.G.— 19th August 1936.—Babu Subodh Lal Banerjee, Sub-Deputy Collector and Circle Officer, Raniganj, district Burdwan, is granted, under rule 81(*b*) (*ii*) of the Fundamental Rules, leave on average pay for six days, with effect from the 20th to 25th July 1936 (both days inclusive).

No. 21311.S.-G. — 19th August 1936.— It is hereby notified for general information that, under rule 20(*b*) of the rules for the management of charitable hospitals and dispensaries in Bengal, the following gentlemen have been appointed to be members of the committee for the management of the charitable dispensary at Molandighi in the district of Burdwan:—

The Subdivisional Officer, Asansol (*ex-officio*).

The Circle Officer, Asansol (*ex-officio*).

Babu Matilal Sarkar.

Babu Rakhal Das Banerjee.

Babu Jnanendra Nath Chatterjee.

Babu Satya Kinkar Mukherjee.

Shaikh Bahadur Tarafdar.

Babu Dakshineswar Dey.

Munshi Abdus Sattar Middah.

Babu Bhudeb Chandra Mukherjee.

Soleman Mridha of Akandara.

Babu Adya Charan Mukherjee.

No. 4953J. G. 20th August 1936.—Maulvi Muhammad Ibrahim, Sub-Deputy Magistrate and Sub-Deputy Collector, Tamluk, District Midnapore, is granted, under rule 81(*b*)(*ii*) of the Fundamental Rules, leave on average pay for twelve days, with effect from the 3rd to the 14th August 1936 (both days inclusive).

L. B. BURROWS, *Commissioner.*

Chinsura, the 13th August 1936.

No. 7710J.G. - It is hereby notified for general information that, under rule 3 of the rules for the management of committees of Government high schools, Maulvi Ajhar Ali Khan, Assistant Head Master, has been elected to be a teachers' representative on the managing committee of the Hooghly Collegiate School for the unexpired period of the present term of the committee, *vice* Babu Surendra Nath Bhattacharya, transferred.

S. P. GHOSE, *District Magistrate.*

Howrah, the 21st August 1936.

It is hereby notified for general information that, under section 13 of the Bengal Village Self-Government Act, 1919 (Bengal Act V of 1919), read with rule 36 of the rules for the election and appointment of members of union boards, Babu Nripendra Nath Mandal has been appointed as a member of the Nalpur union board in police-station Sankrail in the Sadar subdivision of the district of Howrah, *vice* Babu Jogendra Nath Mandal, deceased.

S. C. SINHA, *District Magistrate.*

Orders by the Deputy Inspector-General of Police, Burdwan Range.

Chinsura.—No. 6547.—21st August 1936.—Babu Jatindra Mohan Sen Gupta, officiating Inspector, Midnapore, was granted leave on average pay from 12-7-1936, p.m. to 6-8-1936, p.m., under rule 81(*b*)(*ii*) of the Fundamental Rules.

J. M. MACKENZIE,

Deputy Inspector-General of Police (offg.).

Chittagong Division—Chittagong.

Orders by the Deputy Inspector-General of Police, Bakarganj Range.

Barisal.—No. 4064.—20th August 1936.—Sub-Inspector Muhammad Lal Mian of Bakarganj at present acting as Inspector in that district, *vice* Babu Haridas Mukharji, Inspector, temporarily employed in the Intelligence Branch, will continue to act as such with effect from the 1st August 1936, *vice* Babu Rasik Charan Basu, Inspector, temporarily employed in the D. I. B., Bakarganj.

Babu Subodh Chandra Mazumdar, officiating Inspector, Noakhali, is granted 3 months' leave on average pay, under rule 81(*b*)(*ii*) of the Fundamental Rules, with effect from the 18th August 1936 or any subsequent date on which he may be relieved.

He will revert to his substantive rank of Sub-Inspector while on leave.

Sub-Inspector Sharat Chandra Chatarji of Noakhali is appointed to act as Inspector, *vice* Rai Sahib Prabhat Chandra Datta, Inspector, officiating as Deputy Superintendent, Tippera.

G. H. MANNOOCH,

Deputy Inspector-General of Police, (offg.).

Dacca Division—Dacca.

No. 4264J.—20th August 1936.—It is hereby notified for general information that, under section 25 of the Bengal Local Self-Government Act (III of 1885), I have accorded my approval to the election by the following local boards in the district of Bakarganj of the gentlemen named under each to be their respective Chairmen:—

Sadar local board.

Maulvi Abdul Gaffur.

Bhola local board.

Khan Sahib Maulvi Efazuddin Ahmed.

W. H. NELSON, *Commissioner.*

Presidency Division—Calcutta.

No. 1954R.G.—18th August 1936.—Babu Birendra Nath Maitra, Sub-Deputy Collector and Circle Officer, Sadar, Murshidabad, is granted leave on average pay for six weeks, under rule 81(*b*)(*ii*) of the Fundamental Rules, with effect from the 13th July 1936.

No. 1959R.G.—15th August 1936.—Babu Birendra Nath Maitra, Sub-Deputy Collector, on leave, is posted temporarily to Sadar, Nadia.

A. J. DASH, *Commissioner.*

Jessore, the 18th August 1936.

It is hereby notified for general information that, under section 13 of the Bengal Village Self-Government Act, 1919 (Bengal Act V of 1919), read with rule 35 of the rules for the election and appointment of members of union boards, Munshi Abdus Samad Molla has been duly elected to be a member of the Hazipur union board in the Magura subdivision in the district of Jessore, *vice* Munshi Elahibux Molla, deceased.

[ILLEGIBLE], for *District Magistrate.*

Orders by the Deputy Inspector-General of Police, Presidency Range.

Calcutta.—No. 4537.—11th August 1936.—*Substitute* the following for sub-paragraph 3 of notification Calcutta No. 4197.—27th July 1936, published in the *Calcutta Gazette*, dated the 6th August 1936:—

"Mr. W. Linford, Armed Inspector, 24-Parganas, was allowed leave on average pay from 11th May 1936 to 1st June 1936, under rule 81(*b*) (*ii*) of the Fundamental Rules, on the expiry of which he rejoined his post of Reserve Inspector."

B. N. BANARJI,

Deputy Inspector-General of Police (offg.).

Orders by the Deputy Inspector-General of Police, Intelligence Branch.

Calcutta.—No. 1441/R.O.—18th August 1936.—Sub-Inspector Shamsul Islam Khan is appointed to act as Inspector with affect from 1-8-1936, a.m. *vice* Babu Shyama Pada Chatarji, Inspector, transferred to the Calcutta Police.

C. E. S. FAIRWEATHER,
Deputy Inspector-General of Police (offg.).

Rajshahi Division—Jalpaiguri.

No. 3926M.—15th August 1936.—It is hereby notified for general information that at the by-election held on the 3rd August 1936, Babu Binode Gopal Karmakar, Merchant, Sherpur (Bogra), has been duly elected a Commissioner of the Ward No. II of the Sherpur Municipality, *vice* Babu Jadu Gopal Karmakar, deceased.

No. 3944M.—15th August 1936.—In exercise of the powers conferred on me by section 25 of the Bengal Local Self-Government Act, III of 1885, as amended by Act V (B.C.) of 1908, I approve of the election by the members of the Alipur Duar local board in the district of Jalpaiguri of Babu Dhirendra Kumar Bhowmik to be their Chairman.

No. 4020M.—22nd August 1936.—It is hereby notified for general information under section 50 of the Bengal Municipal Act, 1932, that at the by-election held on the 15th August 1936, Babu Birendra Chandra Ghose, Tea Planter, Jalpaiguri, has been duly elected a Commissioner of Ward No. I of the Jalpaiguri Municipality, *vice* Dr. Jogesh Chandra Ghose, deceased.

Corrigendum.—No. 4017M.—22nd August 1936.—In this office notification No. 3751M., dated the 4th August 1936, published at page 1949, Part I of the *Calcutta Gazette*, of 13th August 1936, *read* "Babu Prem Singh Kunai" and "Rev. Pasang Targain" *for* "Babu Prem Singh Kumar" and "Rai Pasang Targain."

L. R. FAWCUS, *Commissioner (offg.).*

Jalpaiguri, the 19th August 1936.

No. 7789G.—It is hereby notified for general information that, under section 13 of the Bengal Village Self-Government Act, 1919 (Bengal Act V of 1919), the following gentlemen have been duly elected to be members of the union boards in police-stations in the Sadar subdivision of the district of Jalpaiguri:—

District Jalpaiguri—Sadar subdivision.

Jalpaiguri police-station.

(1) Barapatia Nutanbas union board No. 1.

Babu Hedek Chandra Das, *vice* Babu Kundar Singh Das, deceased.

Rajganj police-station.

(2) Mantadari union board No. 2.

Babu Dalsingh Das, *vice* Babu Hem Chandra Bagchi, removed.

Babu Giridhari Das, *vice* Babu Rajbol Sing Das, removed.

(3) Panikauri union board No. 5.

Babu Aula Singh Roy, *vice* Maulvi Jahar ali Muhammad, deceased.

(4) Sukhani union board No. 9.

Babu Kali Charan Sannyasi, *vice* Babu Khola Katu Roy, deceased.

(5) Fulbari union board No. 3.

Babu Daluram Singh Roy, *vice* Babu Faninda Deb Roy, deceased.

No. 7791G.—It is hereby notified for general information that, under section 13 of the Bengal Village Self-Government Act, 1919 (Bengal Act V of 1919), the following gentlemen have been duly appointed to be members of the union boards in police-stations in the Sadar subdivision of the district of Jalpaiguri:—

District Jalpaiguri—Sadar subdivision.

Jalpaiguri police-station.

Garalbari union board No. 7.

Munshi Ajimuddin Muhammad, *vice* Babu Dhirkantha Das, deceased.

Tetulia police-station.

Majhipara union board No. 4.

Babu Ratna Kumar Roy Mandal, *vice* Munshi Ahamuddin Muhammad, resigned.

R. H. HUTCHINGS, *Dy. Commissioner.*

Rajshahi, the 13th August 1936.

No. 6924J.—It is hereby notified for general information that, under section 13 of the Bengal Village Self-Government Act, 1919 (Bengal Act V of 1919), read with rule 35 of the rules for the election and appointment of members of union boards, etc., Babu Nagendra Nath Shaha has been duly elected to be a member of the Dahia union board in Singra police-station in the Nator subdivision of the district of Rajshahi, *vice* Babu Jatindra Nath Ghosh, deceased.

Rajshahi, the 21st August 1936.

No. 1186C.—It is hereby notified for general information that—

Under sub-section (*2*) of section 6 of the Bengal Village Self-Government Act (Bengal Act V of 1919), the following gentlemen have been duly elected to be members of the undermentioned union board in the Naogaon subdivision of the Rajshahi district:—

Naogaon Circle.

Naogaon police-station.

Naogaon union board.

Ward No. I.

Babu Rajani Mohan Sanyal.

Ward No. II.

Maulvi Manikuddin Ahmed.

Ward No. III.

Babu Satish Chandra Goswami.
Babu Satish Chandra Basak.
Babu Durga Prasad Thakur.
Maulvi Mahiruddin Mia.

Under sub-section (*3*) of section 6 of the Bengal Village Self-Government Act, 1919 (Bengal Act V of 1919), the following gentlemen have been appointed by me to be members of Naogaon union board in the police-station Naogaon, in subdivision Naogaon of the Rajshahi district:—

Maulvi Mirajuddin Ahmed.
Maulvi Mujan Ali Mridha.
Babu Hemchandra Chakravarty.

K. K. HAJARA, *District Magistrate.*

Pabna, the 18th August 1936.

It is hereby notified for general information that, under section 13 of the Bengal Village Self-Government Act, 1919 (Bengal Act V of 1919), Munshi Kalimuddin Ahmed of Atiapara has been appointed to be a member of Karanja union board within Santhia police-station in the Sadar subdivision of the Pabna district, *vice* Maulvi Osman Goni, deceased.

MD. MAHMUD, *District Magistrate*

Dinajpur, the 18th August 1936.

It is hereby notified for general information that under section 13 of Bengal Village Self-Government Act (Bengal Act V of 1919), Munshi Amiruddin Sarker of Suryapur has been nominated to be a member of the Saidpur union board in the Thakurgaon subdivision in the police-station of Pirganj of the district of Dinajpur, *vice* Bhadang Barman, resigned.

M. K. KIRPALANI, *District Magistrate.*

Bogra, the 14th August 1936.

No. 3850J.—It is hereby notified for general information that, under sub-section (*2*) of section 6 of the Bengal Village Self-Government Act, 1919 (Bengal Act V of 1919), the following gentlemen have been duly elected to be members of the undermentioned union boards in the district of Bogra:—

Bogra police-station.

Union No. I—Namuja.

Ward No. I.

Munshi Aman Uddin Talukdar.
Munshi Joyenuddin Talukdar.

Ward No. II.

Munshi Karimulla Sardar.
Munshi Rajab Ali Pramanik.

Ward No. III.

Munshi Kasem Ali Talukdar.
Munshi Sayedulla Sardar.

Shibganj police-station.

Union No. V—Majihatta.

Ward No. I.

Munshi Ayenuddin Talukdar.
Babu Shasthi Chandra Sil.

Ward No. II.

Munshi Mamin Uddin Ahmed.
Munshi Nasiruddin Talukdar.

Ward No. III.

Munshi Madhu Talukdar.
Munshi Iman Ali Fakir.

No. 3851J.—It is hereby notified for general information that, under sub-section (*3*) of section 6 of the Bengal Village Self-Government Act, 1919 (Bengal Act V of 1919), the following gentlemen have been duly appointed to be members of the undermentioned union boards in the district of Bogra:—

Bogra police-station.

Union No. I—Namuja.

Babu Hemanta Kumar Nandi.
Munshi Mahir Uddin Ahmed.
Munshi Kheraj Uddin Ahmed.

Shibganj police-station.

Union No. V—Majihatta.

Munshi Najibulla Pramanik.
Babu Binoy Krishna Deb.
Dr. Alimulla Sarkar.

T. I. M. NURANNABI CHAUDHURI,
District Magistrate.

Registered No. C207

The Calcutta Gazette

THURSDAY, AUGUST 27, 1936.

PART I A

Orders and Notifications by the Government of India republished for general information.

HOME DEPARTMENT.

NOTIFICATIONS.

JUDICIAL.

Simla, the 10th August 1936.

No. F. 538/36.—Mr. A. K. Roy, Barrister-at-Law, Advocate-General for the Presidency of Bengal, is granted, under rule 287 (*d*) and (*a*) of the Supplementary Rules, extra-ordinary leave without pay from the 14th to the 27th August 1936, inclusive, and leave on full pay during the vacation of the High Court from the 28th August to the 8th November 1936, both days inclusive.

No. F. 538/36-I.—Mr. S. M. Bose, Barrister-at-Law, Standing Counsel, Bengal, is appointed to act as Advocate-General for the Presidency of Bengal in addition to his own duties, during the absence on leave of Mr. A. K. Roy, Barrister-at-Law, or until further orders.

J. A. THORNE,
Joint Secy. to the Govt. of India.

FOREIGN AND POLITICAL DEPARTMENT.

NOTIFICATIONS.

Simla, the 10th August 1936.

No. 472-G.—The Governor-General in Council is pleased to recognise the appointment of Herr E. von Selzam as Acting Consul General for Germany at Calcutta.

The 12th August 1936.

No. 473-X.—In exercise of the powers conferred by the Indian (Foreign Jurisdiction) Order in Council, 1902, and all other powers enabling him in that behalf, the Governor-General in Council is pleased:—

(1) to invest Rai Sahib Rup Narain, Chief Judge, Sikkim State, with the powers of a magistrate of the first class as described in the Code of Criminal Procedure, 1898 (Act V of 1898) to try those cases in which the Governor-General in Council has jurisdiction except cases against European British subjects and persons jointly charged with European British subjects; and

(2) to direct that a person convicted by the said Rai Sahib Rup Narain in the exercise of the powers hereby conferred may appeal to the Political Officer in Sikkim in the same manner and to the same extent as a person convicted by the British Trade Agent, Gyantse or Yatung, may appeal under Part I of the Notification of the Government of India in the Foreign and Political Department, No. 64-I, dated 19th February 1929.

H. A. F. METCALFE,
Foreign Secy. to the Govt. of India.

DEPARTMENT OF INDUSTRIES AND LABOUR.

NOTIFICATION.

Simla, the 12th August 1936.

No. L.-3050.—The following draft of certain rules which the Governor-General in Council proposes to make in exercise of the powers conferred by sub-section (*4*) of section 33 of the Factories Act, 1934 (XXV of 1934), and in supersession of the rules published with the notification of the Government of India in the Department of Industries and Labour No. L.-3050, dated the 19th February 1935, is published as required by section 79 of the said Act for the information of all persons likely to be affected thereby, and notice is hereby given that the draft will be taken into consideration on or after the 15th November 1936.

Any objection or suggestions which may be received in respect of the draft before the date specified will be considered by the Governor-General in Council.

DRAFT RULES.

1. (*a*) *Title and application.*—These rules may be called the Hazardous Occupations (Lead) Rules, 1936.

(*b*) They shall apply to all factories in which any operation specified in the Schedule is carried on.

2. *Declaration of occupations as Hazardous.*—The operations specified in the Schedule are declared to be hazardous operations when carried on in any factory.

3. (1) *Definition of "lead compound".*—In these rules "lead compound" means any compound of lead, other than galena, or any mixture which contains a compound of lead, other than galena (but does not include an alloy containing lead);

Provided that the compound or mixture when subjected to the treatment prescribed in sub-rule (3) yields to an aqueous solution of hydro-chloric acid a quantity of soluble lead compound exceeding, when calculated as lead monoxide, five per cent. of the dry weight of the portion taken for analysis.

(2) In the case of paints and similar products and other mixtures containing oil or fat the "dry weight" means the dry weight of the material remaining after the substance has been thoroughly mixed and treated with suitable solvents to remove oil, fats, varnish or other media, and the treatment referred to in sub-rule (1) shall be applied to the material so remaining.

(3) The treatment referred to in sub-rule (1) shall be as follows:—

A weighed quantity of the material which has been dried at 100°C and thoroughly mixed shall be continuously shaken for one hour, at the common temperature, with 1,000 times its weight of an aqueous solution of hydrochloric acid containing 0·25 per cent. by weight of hydrogen chloride. This solution shall thereafter be allowed to stand for one hour and then filtered. The lead salt contained in the clear filtrate shall then be precipitated as lead sulphide and weighed as lead sulphate.

4. *Sampling.*—When an Inspector suspects that any substance used or intended for use in any factory contains a lead compound he may at any time take for analysis sufficient samples of that substance:

Provided that the manager of the factory may, at the time when a sample is taken and on providing the necessary appliances, require the Inspector to divide the sample into two parts and to make and seal and deliver to him one such part.

5. *Prohibition of employment of women, adolescents and children.*—No woman, adolescent or child shall be employed in any factory in any of the operations specified in items (*i*) to (*viii*) inclusive of the Schedule.

6. *Medical certification and examination.*—(1) No person shall be employed in any factory in any of the operations specified in the Schedule unless:—

(*a*) a special certificate of fitness in the Form appended to these rules granted to him by a certifying surgeon appointed under section 12 of the Factories Act, 1934, is in the custody of the manager of the factory; and

(*b*) he carries with him while at work a token giving reference to such certificate.

(2) Every person employed shall be medically examined by a certifying surgeon at intervals of not more than six months, and a record of such examinations shall be entered in the Form appended to these rules.

(3) If at any time the certifying surgeon is of opinion that any person is no longer fit for employment in any of the operations specified in the Schedule, he shall cancel the special certificate of fitness of that person.

(4) No person whose special certificate of fitness has been cancelled shall be employed in any of the operations specified in the Schedule unless the certifying surgeon again certifies him to be fit.

7. *Exhaust draughts.*—Where gas, dust or fume is produced in any of the operations specified in the Schedule, provision shall be made for drawing the gas, dust or fume away from every such person by means of an efficient exhaust draught so contrived as to operate on the gas, dust or fume as closely as possible to the point of origin:

Provided that where the provision of an efficient exhaust draught is not reasonably practicable respirators of a type approved by the Inspector shall be provided by the occupier and worn by every person working under such conditions.

Explanation.—"Efficient exhaust draught" means localised ventilation effected by heat or mechanical means, for the removal of gas, vapour, dust or fumes so as to prevent them (as far as practicable under the atmospheric conditions usually prevailing) from escaping into the air of any place in which work is carried on. No draught shall be deemed efficient which fails to remove smoke generated at the point where such gas, vapour, fumes or dust originate.

8. *Floors and work-benches.*—(1) The floor of every room, in which any person is employed on any of the operations specified in the Schedule, shall be of smooth cement or other smooth impervious material.

(2) The top of every work-bench in every such room shall be of smooth impervious material.

9. *Washing facilities.*—The occupier shall provide and maintain in a cleanly state and in good repair for the use of persons employed on any of the operations specified in the Schedule either—

(*i*) a trough with a smooth impervious surface fitted with a waste pipe without plug, and of sufficient length to allow at least two feet for every five such persons employed at any one time, and having a constant supply of warm water from taps or jets above the trough at intervals of not more than two feet; or

(*ii*) at least one lavatory basin for every five such persons employed at any one time, fitted with a waste pipe and plug, having either a constant supply of hot and cold water or warm water laid on, or (if a constant supply of heated water be not reasonably practicable) a constant supply of cold water laid on, and a supply of hot water always at hand when required for use by such persons;

together with, in either case, a sufficient supply of nail brushes, soap or other suitable cleansing material, and clean towels.

10. *Food, drink and tobacco.*—No food, drink or tobacco shall be brought into, or consumed in, any room in which any person is employed upon any of the operations specified in the Schedule.

11. *Protective clothing.*—Adequate protective clothing such as overalls in a clean condition shall be provided by the occupier and worn by every person employed on any of the operations specified in the Schedule.

Provided that the Chief Inspector of Factories may grant exemption from the operation of this rule to such extent as he deems suitable, where he is satisfied that its observation is not necessary for safeguarding the health of the operatives concerned.

12. *Tools and apparatus.*—All tools and apparatus used in any operation specified in the Schedule shall be kept clean.

13. *Exemption of casual operations.*—If it appears to the Chief Inspector of Factories that owing to the casual nature of any operations specified in head (*ix*) of the Schedule, the application of any provisions of these rules is not necessary for safeguarding the health of persons employed on these operations, he may grant exemption from such provisions to such extent and on such conditions as he may deem fit.

SCHEDULE.

(*i*) Work at a furnace where the reduction or treatment of zinc or lead ores is carried on:

(*ii*) The manipulation, treatment, or reduction of ashes containing lead, the desilverising of lead, the refining of dross containing lead or the melting of lead or old zinc:

(*iii*) The manufacture of alloys containing more than ten per cent. of lead:

(*iv*) The use, except solely in the solid state, of metallic lead or of alloys containing more than ten per cent. of lead:

(*v*) The manufacture of any oxide, carbonate, sulphate, chromate, acetate, nitrate, or silicate of lead:

(*vi*) Mixing or pasting in connection with the manufacture or repair of electric accumulators:

(*vii*) Handling or mixing of lead tetra ethyl:

(*viii*) The cleaning of work-rooms where any of the processes aforesaid are carried on:

(*ix*) Every other operation involving the use of any lead compound or the cleaning of work-rooms where any such operation is carried on.

FORM.

SPECIAL CERTIFICATE OF FITNESS.

In respect of persons employed in operations involving the use of lead compounds.

[Rule 6 of the Hazardous Occupations (Lead) Rules, 1936.]

Serial No.

Date

I HEREBY certify that I have personally examined (named) $\frac{\text{son}}{\text{daughter}}$ of $\frac{}{\text{wife}}$
(caste, etc.) residing at
who is desirous of being employed as in the Factory and that his/her
age as nearly as can be ascertained from my examination is years and that he/she is in my opinion
fit for employment at work involving the use of lead compounds. His/her descriptive marks are

Left thumb impression of
person examined.

Certifying Surgeon.

I certify that I re-examined the person mentioned above on	I extend this certificate until	Signature of certifying surgeon.	Note of symptoms of lead poisoning (if any).

A. G. CLOW,
Secy. to the Govt. of India.

Registered No. C207

The Calcutta Gazette

THURSDAY, AUGUST 27, 1936.

PART IB

Educational Notices.

Presidency Division.

Calcutta, the 14th August 1936.

Results of the Final Examinations of the Guru Training and Muallim Training Schools in the Presidency Division, 1936.

ERRATA.

The declaration of the following three candidates as successful at the Guru Training and Muallim Training Examinations, 1936, published in the *Calcutta Gazette* of 9th April 1936, Part IB, page 406-7, is hereby cancelled :—

24-Parganas.

7. Shaikh Golam Kibria of the Basirhat Guru Training School.

Nadia.

1P. Susanta Kumar Mandal—Private.
2P. Md. Azizul (Azizur) Rahman - Private.

ANWAR-UL-QADIR,
for *Inspector of Schools,*
Presidency Division.

Orders by the Vice-Chancellor and Syndicate of the Calcutta University.

Senate House, the 27th August 1936.

The undermentioned candidate, at the Matriculation Examination, 1936, whose result was withheld from publication, is declared to have passed as indicated below :—

Private Student,

Roll. Bbow. F. P. 211 Mary Periera .. Second.

B. B. DUTT,
Controller of Examinations.

Calcutta University.

Senate House, the 21st August 1936.

NOTICE.

The next M. B. Examinations will commence on Thursday, the 19th November 1936, and applications and fees for admission to the examinations must reach the University not later than Thursday, the 15th October 1936.

B. B. DUTT,
Controller of Examinations.

Calcutta University.

Senate House, the 27th August 1936.

ERRATA LIST.

1. In the list of successful candidates at the Intermediate Examination in Arts, 1936, published in the *Calcutta Gazette*, dated the 28th May 1936, on page 689—

for

"S Yeazuddin Ahmed .. City College"

please read

"S. Yeazuddin Ahmed .. City College."

2 In the list of successful candidates at the Matriculation Examination, 1936, published in the *Calcutta Gazette*, dated the 18th June 1936—

(*a*) *on page 886, for*

"Cal 1325 Sheikh Md. Abdul Quahar .. 16-8 First"

please read

"Cal. 1325 Sheikh Md. Abdul Quahar (1) .. 16-8 First ;"

(*b*) *on page 895, for*

"Cal. 3220 Nawratan Lall .. 17-5 Third"

please read

"Cal 3220 Nawratan Lall .. 17-5 Third ;"

(*c*) *on page 919, for*

"Bar. 33 Surendranath Ray .. 16-10 Third"

please read

"Bar. 33 Surendranath Ray .. 16-10 First ;"

(*d*) *on page 952, for*

"Chi. 452 Md Tozodmiyan .. 18-3 Second"

please read

" Chi. 452 Md Tazoo Miyan .. 18-3 Second ;"

(*e*) *on page 960, for*

"Din 52 Jatindranath Gupta .. 16-5 Second"

please read

"Din 52 Jyotirindranath Gupta .. 16-5 Second ;"

(*f*) *on page 1016, for*

"Gopeschandra Basu (27) .. Second"

please read

"Bhupeschandra Basu (27) .. Second."

3. In the list of successful candidates at the B A. Examination, 1936, published in the *Calcutta Gazette*, dated the 25th June 1936 —

(*a*) *on page 1067, for*

"7 Mohammad Abdul Razzaque .. Islamia College"

please read

"7 Mohammad Abdur Razzaque .. Islamia College ;"

(*b*) *for the following entry, on page 1080*

"680 Daskundu, Mangopal . Rangpur Carmichael College"

please read the following entry on page 1077 under "Chakrabarti, Birendrakumar .... Non-collegiate student (Roll Rang. N. 12)

"Chakrabarti, Birendrakumar .. Rangpur Carmichael College."

B. B. DUTT,
Controller of Examinations.

State Medical Faculty of Bengal.

NOTICE.

Grosvenor House, Calcutta, the 17th August 1936.

No. 3197F.—The written part of the ensuing Primary, Intermediate and Final Licentiateship Examinations of the Faculty will be held at the Examination Hall, top floor of the Darbhanga Library Buildings, Calcutta University, on the following days and in the following order:—

Date.	From 10 a.m. to 1 p.m.	From 12 noon to 3 p.m.	From 2 p.m. to 5 p.m.
Final Examination.			
1936.			
Tuesday, 3rd November.	Medicine	..	Medical Jurisprudence and Hygiene.
Wednesday, 4th November.	Surgery	..	Midwifery.
Intermediate Examination.			
Thursday, 5th November.	Physiology	..	Materia Medica.
Friday, 6th November.	..	Anatomy	..
Primary Examination.			
Saturday, 7th November.	..	Chemistry and Physics.	..

The time and place for holding the oral and practical examinations in each subject will be announced later.

Applications and fees for admission to the above examinations will be received in this office up to the 3rd October 1936.

R. M. DAS, *Secretary.*

State Medical Faculty of Bengal.

REVISED NOTICE.

Grosvenor House, Calcutta, the 19th August 1936.

No. 3219F.—The written part of the ensuing Preliminary Examinations for the Senior and Junior Certificates in General Nursing and the examinations for the Senior and Junior Certificates in Maternity Nursing under the revised regulations promulgated under Government of Bengal notification No. 2840 Medl., dated the 11th September 1934, will be held at the Examination Hall of the Calcutta Medical College on the following days and in the following order:—

From 12 noon to 3 p.m.

October 1936.		
Wednesday, 7th	..	Senior Midwife Certificate Examination.
Thursday, 8th	..	Junior Midwife Certificate Examination.
Friday, 9th	.	Preliminary Examinations for the Senior and Junior Certificates in General Nursing.

The time and place for holding the oral and practical examinations will be announced later.

Applications and fees for admission to the above examinations will be received in this office up to the 4th September 1936.

This cancels notification No. 3081F., dated the 30th July 1936.

R. M. DAS, *Secretary.*

Education Department, Bengal.

NOTIFICATION.

Calcutta, the 21st August 1936.

The next Interpretership Examination in Bengali will be held by a Board of Examiners on the 30th November and 1st December 1936 in the room of the Assistant Director of Public Instruction, Bengal, in Writers' Buildings, Calcutta. The oral part will be taken on the first day and the written part on the second day. The time for examination will be as in rule X of the Rules for the Encouragement of the Study of Oriental Languages. Officers under the Government of Bengal who desire to attend the examination and have been duly permitted by the Local Government to appear at the examination should present themselves for examination before the Board of Examiners at 10 a.m. on each of the days mentioned above.

J. M. BOTTOMLEY.

Director of Public Instrn., Bengal.

Registered No. C207

The Calcutta Gazette

THURSDAY, AUGUST 27, 1936.

PART II

Advertisements.

Notices

Advertisements, Notices, etc., intended for insertion in this part of the Gazette must be sent to Press before 12 noon on Saturday, and all costs deposited and proofs returned by 4 p.m. on Monday. Manuscripts and postal remittances must be addressed to Superintendent, Government Printing (Publication Branch), Bengal Government Press, Alipore.

For the convenience of advertisers located in Calcutta, arrangements have been made to accept advertisements and prepayment of charges at Sales Office, Ground Floor, Writers' Buildings, Calcutta. The latest time for receipt of advertisements for current week's Gazette has been extended till 4 p.m. on Mondays.

Land Sale Notices.

Notification A.

NOTICE is hereby given, under sections 6 and 13, Act XI of 1859, that the undermentioned estates and shares of estates in the district of Howrah will be put up for sale at the office of the Collector of that district on the 25th September 1936, at 12 noon, for arrears of revenue and other demands which by law are realisable as arrears of land revenue.

When in columns 5, 7 and 9 of the following statement it is stated that only a share is to be sold, it is to be understood that a separate account is kept for that share :—

Tauzi No.	Name of mahal and pargana.	Sadar jama of the whole estate.	Whether the whole estate is to be sold.	If only a share is to be sold, specification of such share or shares.	Names of proprietor of property to be sold.	If only a share is to be sold, the Sadar jama of such share.	If the whole estate is to be sold, the arrears due from it.	If only a share is to be sold, the arrears due from it.
1	2	3	4	5	6	7	8	9
		Rs. a. p.				Rs. a. p.	Rs. a. p.	Rs. a. p.
1/9	Basantapur, pargana Bhursit, police-station Amta.	11,065 7 0	..	1a. 16gds. share of the estate.	Monohor Lal Seal	1,244 14 4	..	165 5 4
4/7	Mandalghat, pargana Bhursit, police-station Shyampore.	2,23,073 8 0	..	2as. 11 gds. 3 kag 4 til share of the estate.	Ditto ..	35,669 0 0	..	12,208 0 0
4/8	Ditto ..	2,23,078 8 0	..	12 gds. 3c. 16 til share of the estate.	Sm. Nikunja Manjuri Dasi.	8,929 9 6	..	3,574 3 7
4/15	Ditto ..	2,23,078 8 0	..	1a. 10 gds. 2c. 3 kag 10½ til share of the estate.	Gokul Chandra Pyne as receiver to the estate of Panchanon Mullick.	21,402 2 0	..	6,974 6 10
4/16	Ditto ..	2,23,078 8 0	..	1a. 10gds. 2 c. 3kag 10½ til share of the estate.	Jogendra Nath Mullick.	21,402 1 0	..	2,782 12 0
4/17	Ditto ..	2,23,078 8 0	..	1a. 10gds. 2c. 3 kag 10½ til share of the estate.	Girimohon Mullick.	21,402 1 0	..	7,537 4 3
4/18	Ditto ..	2,23,078 8 0	..	1a. 10gds. 2c. 3 kag 10½ til share of the estate.	Gourmohon Mullick.	21,402 1 3	..	8,606 0 2
8/A	Sherpur, pargana Balia, police-station Amta.	10,383 8 0	..	9 annas share of the estate.	Monohor Lal Seal	5,840 11 3	..	2,393 0 11

The estates are being advertised for sale for instalments of revenue which were due on 30th Jaistha, 1343 B.S., of which the latest date of payment was 28th June 1936.

All other shares besides that specified will be excluded from the sale.

Howrah, the 11th August 1936.

S. C. SINHA, Collector.

Notification A.

NOTICE is hereby given, under sections 6 and 13, Act XI of 1859, that the undermentioned estates and shares of estates in the district of Malda will be put up for sale at the office of the Collector of that district on the 25th September 1936, at 12 noon, for arrears of revenue (and other demands which by law are realisable as arrears of land revenue).

When in columns 5, 7 and 9 of the following statement it is stated that only a share is to be sold, it is to be understood that a separate account is kept for that share :-

Tauzi No.	Name of mahal and pargana.	Sadar jama of the whole estate.	Whether the whole estate is to be sold.	If only a share is to be sold, specification of such share or shares.	Names of proprietors of property to be sold.	If only a share is to be sold, the Sadar jama of such share.	If the whole estate is to be sold, the arrears due from it.	If only a share is to be sold, the arrears due from it.
1	2	3	4	5	6	7	8	9
		Rs. a. p.				Rs. a. p.	Rs. a. p.	Rs. a. p.
42	Mahal Chhatrak, pargana Hathinda.	745 10 0	Whole estate.	....	Sarat Chandra Sarkar.	..	54 10 0	..
84	Taraf Hossainpur, pargana Kotwali.	2,614 12 0	Do. ..	....	Gossain Rudramanda Giri.	..	216 0 0	..
146	Taraf Khane Alampur, pargana Bhatia Gopalpur.	11,069 2 2	No ..	110/R. S. 8 annas share of the whole estate.	Kumar Krishna Ghosh.	5,534 0 1	..	1,045 3 9
146	Ditto ..	11,069 2 2	No ..	146/1. 8 annas share of the whole estate. (The above two shares of tauzi No. 146 will be sold together.)	Niroj Krishna Ghosh and others, through their guardian mother Tarangini Dasi.	5,534 0 1	..	1,045 3 9
163	Toke Bhaktipur, Mota-loke mauza Madhai-pur, pargana Rukunpur.	1,188 14 0	No ..	163/1. 8 annas share of the whole estate.	Profulla Kumar Banerjee.	594 7 0	..	98 15 0
205	Taraf Raghunathpur, and others, pargana Bhatia Gopalpur.	1,405 10 4	No ..	205/13. 6 annas share of mauza Raghunathpur and 13 other mauzas.	Dina Bandhu Singh Jha and others.	867 0 0	..	150 1 6
221	Taraf Sadipur, pargana Kotwali.	693 3 0	Whole estate.	....	Gossain Rudramanda Giri.	..	28 0 0	..
681	Mahal Kashimpur, pargana Kashimpur.	2,311 15 0	Do. ..	....	Mahammad Hasimat Ali and others.	..	197 12 6	..

The whole estate is advertised for sale for arrears of its separate accounts R. S. and 15 for kists January, March and June 1936. There is also an arrear of Rs. 12 in separate account No. 13.

N. B. -In cases where shares of estates are advertised for sale, all other shares than those mentioned in this notification will be excluded from sale.

B. R. SEN, Collector.

Malda, the 12th August 1936.

Notification A.

NOTICE is hereby given, under sections 6 and 13, Act XI of 1859, that the undermentioned estates and shares of estates in the district of Chittagong will be put up for sale at the office of the Collector of that district on the 9th November 1936, at 12 noon, for arrears of revenue (and other demands which by law are realisable as arrears of land revenue) :-

Tauzi No.	Name of mahal and pargana.	Sadar jama of the whole estate.	Whether the whole estate is to be sold.	If only a share is to be sold, specification of such share or shares.	Names of proprietors of property to be sold.	If only a share is to be sold, the Sadar jama of such share.	If the whole estate is to be sold, the arrears due from it.	If only a share is to be sold, the arrears due from it.
1	2	3	4	5	6	7	8	9
		Rs. a. p.				Rs. a. p.	Rs. a. p.	Rs. a. p.
388	Thana Sitakund and Town, taraf Ahamed-ullah and Nasarullah.	729 6 0	Whole	....	Maulvi Nazir Ahmad Chowdhury and others.	..	170 4 0	..
33040	Thana Chakaria, mauza Manikpur, taluk Tufan Ali Munshi.	893 4 0	Do. ..	....	Baradn Prasad Parial and others.	..	31 6 6	..

These estates are being advertised for sale for instalments of revenue which were due on or before the 31st Jaistha, 1343 B. S., of which the latest date of payment was 29th June 1936.

H. BANERJI, Additional Collector.

Chittagong, the 12th August 1936.

Notification A.

NOTICE is hereby given, under sections 6 and 13, Act XI of 1859, that the undermentioned estates and shares of estates in the district of Khulna will be put up to sale at the office of the Collector of that district on the 24th September 1936, at 12 noon, for the arrears of land revenue.

When in columns 5, 7 and 9 of the following statement it is stated that only a share will be sold, it is to be understood that a separate account is kept for that share :—

Tauzi No.	Name of mahal and pargana.	Annual land revenue of the whole estate.	Whether the whole estate is to be sold.	If only a share is to be sold, specification of such share or shares.	Names of proprietors of property to be sold.	If only a share is to be sold, the Sadar jama of such share.	If the whole estate is to be sold, the arrears due from it.	If only a share is to be sold, the arrears due from it.
1	2	3	4	5	6	7	8	9
		Rs. a. p.				Rs. a. p.	Rs. a. p.	Rs. a. p.
60	Dakatia Char, pargana Selimabad.	998 9 0	Yes ..	....	Mr. K. S. Banerjee, Official Receiver, Hon'ble High Court.	..	1,382 5 0	..
77/2	Dhulapur, pargana Dhaliapur.	....	No. ..	Separate account No. 2—Share 11 annas.	Dharani Mohan Rai	12,166 15 4	..	5,375 7 6
854	Tildanga, pargana Sunderbans.	4,836 1 8	Yes ..	....	Dhirendra Nath Roy, executor to the estate of late Jogendra Nath Roy.	..	1,536 1 8	..
1027	Maliki Mahal Char Pania, etc., pargana Bajitpur.	574 0 0	Yes ..	....	Hari Mohan Ghose and others.	..	71 13 6	..
963/1	Isofpur Senhati Taraf, pargana Isofpur.	..	No ..	Separate account No. 1—Share 5 as. 17 gds. 1k. 1kr.	Hrishikesh Mittra and others.	930 2 8	..	19 13 9
1327	Murari Mohan, pargana Tala-Khajra.	871 0 5	Yes ..	....	Tarak Nath Mullick, executor to the estate of Banamali Mullick.	..	56 15 11	..
996	Bhaglia, pargana Sunderbans.	1,152 7 0	Yes ..	....	Mohesh Chandra Bhattacharjee.	..	276 7 0	..
998	Uttar Bain Bari, pargana Sunderbans.	816 0 0	Yes ..	....	Sarada Charan Basar and others.	..	203 10 0	..
1144	Deara Mahal Char Tentultola Digar, pargana Hogla.	1,047 0 0	Yes ..	....	Monoranjan Ghose and others.	..	58 5 10	..
779	Alladipur, pargana Mahi, holding No. 32, khatian No. 74.	506 12 0	Yes ..	....	Baksha Gazi and others.	..	501 13 6	..
971	Dhanesh Khali, pargana Sunderbans, holding No. 2, khatian No. 3.	815 12 0	Yes ..	....	Keramat Ali Molla and others.	..	357 0 9	..
984	Hatiardanga, pargana Mamudabad, holding No. 16, khatian No. 70.	817 9 0	Yes ..	....	Sarada Charan Basar and others.	..	466 2 9	..
108/2	Baloria, pargana Buran.	....	No ..	Separate account No. 2—Share 8 annas.	Jatindra Nath Roy Chowdhury and others.	799 3 6	..	393 3 4
949/3	Garkumarpur, pargana Sunderbans.	....	No ..	Separate account No. 3—Share 2 as. 17 gds. 3 k. 7 til.	Hiran Chandra Ghose.	2,022 14 8	..	599 15 7

N. B.—The above estates or shares of estates are being advertised for sale for the instalments of revenue which were due on or before the 31st Jaistha, 1343 B.S. The latest date of payment was the 29th June 1936.

Khulna, the 15th August 1936.

[ILLEGIBLE], *for* Collector.

Notification A.

NOTICE is hereby given, under sections 6 and 13 of Act XI of 1859, that the undermentioned estates and shares of estates in the district of Jessore will be put up to sale at the office of the Collector of that district on the 24th day of September 1936, at 12 noon, for arrears of revenue (and other demands which by law are realizable as arrears of land revenue). These estates are being advertised for sale for instalments of revenue which were due on or before the 31st Jaistha, 1343 B. S., of which the latest day of payment was the 28th day of June 1936.

When in columns 5, 7 and 9 of the following statement it is stated that only a share is to be sold, it is to be understood that a separate account is kept for that share :—

Tauzi No.	Name of mahal and pargana	Sadar jama of the whole estate.	Whether the whole estate is to be sold.	If only a share is to be sold, the specification of such share or shares.	Names of the proprietors of the property to be sold.	If only a share is to be sold, the Sadar jama of such share.	If the whole estate is to be sold, the arrears due from it.	If only a share is to be sold, the arrears due from it.
1	2	3	4	5	6	7	8	9
		Rs. a. p.				Rs. a. p.	Rs. a. p.	Rs. a. p.
71	Zamindari Isofpore Amirabad, pargana Isofpur.	14,993 10 9	Whole	....	Babu Dhirendra Nath Roy, surviving executor to the estate of late Jogendra Nath Roy.	..	19,102 6 6	.
133/0	Kharija Taluk Kachubaria, pargana Naldi.	1,373 1 4	No. Share No. 0.*	8 annas ..	Rai Dhirendra Nath Roy Chaudhury.	686 8 8	..	56 12 8
225/0	Kharija Taluk Patua, pargana Sayedpur.	1,706 10 8	No. Share No. 0.*	1 anna ..	Sayed Md. Mausud	106 10 8	.	16 3 8
225/1	Ditto ..	1,706 10 8	No. Share No. 1.*	7 as. 10 g. ..	Ditto ..	806 0 0	..	58 11 0
228	Kharija Taluk Panami, pargana Mahammad bebi.	1,520 1 2	Whole	...	Mr. S. N. Mukherjee, Official Liquidator to the Kantipara Mazumdar Estate & Ltd. in liquidation, and others.	..	78 4 10	..
243/1	Kharija Taluk Rasulpur, pargana Isofpur.	29,490 6 0	No. Share No. 1.*	2 as. 14 g. 1 k. 2 cr. 7 til.	Monoranjan Sen, common manager to the estate of Chittaranjan Sen, and others.	5,017 7 5	..	351 9 5
243/2	Ditto ..	29,490 6 0	No. Share No. 2.*	1 a. 11 g. 1 cr. 7 til	Murari Mohan Sen and others.	2,507 2 1	..	200 14 7
243/3	Ditto ..	29,190 6 0	No. Share No. 3.*	1 a. 6 g. 1 k. 10 til	Madan Gopal Sen and others.	3,345 0 0	.	220 0 8
243/4	Ditto ..	29,190 6 0	No. Share No. 1.*	18 g. 1 cr. 16 til .	Gaur Krishna Sen and others.	632 6 8	.	116 15 1
257	Kharija Taluk Shyamnagore, police station Isofpur.	526 0 0	Whole	....	Nabu Krishna Roy	..	32 12 0	..
261/0	Kharija Taluk Sagauna Taraf, pargana Mahammadshahi.	1,596 8 0	No Share No. 0.*	11 annas ..	Nagendra Narayan Roy.	1,097 10 0	..	100 9 11
261/1	Ditto .	1,596 8 9	No Share No. 1.*	5 annas ..	Nitya Pada Roy ..	498 14 9	..	45 11 10
4993/0	Kharija Taluk Taraf Ektarpur, pargana Shaunzial.	1,098 4 2	No. Share No. 0.*	10g. 2 k. 2 cr. .	Umashavi Debo, mother and guardian of Ram Das Roy Chaudhary.	136 9 0	..	12 2 7
4993/2	Ditto ..	4,098 4 2	No. Share No. 2.*	8 annas ..	Joy Chand Roy Chaudhary, sebait of Sree Sree Iswar Madan Gopal Jew Thakur and others.	2,049 2 1	..	174 4 0
5016/0	Kharija Taluk Chakradhi, pargana Mahammadshahi.	655 10 10	No. Share No. 0.*	13 as. 6 g. 2 k. 2 cr.	Malina Debi and others.	546 6 4	..	47 2 4
5088/1	Zamindari Joypur, pargana Joypur.	7,406 8 7	No. Share No. 1.*	3 as 4 p. .	Bhola Nath Ganguly and others.	1,481 5 1	..	870 4 9
5110/1	Kharija Taluk Rampur Dihi, pargana Mulghar.	6,010 8 8	No. Share No. 1.*	8 annas ..	Shitendra Nath Sinha Roy.	2,020 4 4	..	77 18 1

*All other shares except that specified in column 4 will be excluded from sale.

Tauzi No.	Name of mahal and pargana.	Sadar jama of the whole estate.	Whether the whole estate is to be sold.	If only a share is to be sold, the specification of such share or shares.	Names of the proprietors of the property to be sold.	If only a share is to be sold, the Sadar jama of such share.	If the whole estate is to be sold, the arrears due from it.	If only a share is to be sold, the arrears due from it.
1	2	3	4	5	6	7	8	9
		Rs. a. p.				Rs. a. p.	Rs. a. p.	Rs. a. p.
5295/1	Zamindari Gangadaspur, pargana Matiary.	5,105 3 7	No. Share No. 1.*	1 a. 15 g. 1 cr. 12 til	Nilpendra Nath Mallik and others, A. P. Susil Kumar Mitra through Babu Bejoy Gopal Bose, pleader.	560 8 2	..	232 7 3
5295/2	Ditto ..	5,105 3 7	No. Share No. 2.*	5 g. 1 til ..	Ram Hari Roy Choudhary, A. P. Susil Kumar Mitra through Babu Bejoy Gopal Bose, pleader.	79 13 9	..	35 7 5
5295/4	Ditto .	5,105 3 7	No. Share No. 4.*	1 a. 10 g. 1 cr. 13 til	Purna Chandra Biswas and others.	480 11 9	..	194 7 1
5295/8	Ditto ..	5,105 3 7	No. Share No. 8.*	1 a. 1 cr. 2 til	Dina Nath Dey Chaudhury and another, A. P. Susil Kumar Mittra, through Babu Bejoy Gopal Bose, pleader.	320 7 9	..	129 10 0
5295/9	Ditto ..	5,105 3 7	No. Share No. 9.*	10 g. 1 til ..	Brojendra Narayan Dey Chaudhury, A. P. Susil Kumar Mitra through Babu Bijoy Gopal Bose, pleader.	159 9 9	..	64 12 11
5295/13	Ditto ..	5,105 3 7	No. Share No. 13.*	5 gandas ..	Balai Chand Dey Chaudhury and others, A. P. Susil Kumar Mittra through Babu Bijoy Gopal Bose, pleader.	79 12 4	..	33 1 4
5417/1	Zamindari Dihi Ulashi, pargana Mulghar.	10,467 13 5	No. Share No. 1.*	3 as. 15 g. 1 cr. 16 til.	Gobinda Chandra Mukherjee	4,120 15 11	..	5,098 2 10
5417/2	Ditto ..	10,467 13 5	No. Share No. 2.*	8 annas ..	Bhupendra Krishna Ghosh.	9,733 14 9	..	14,216 4 3
5417/5	Ditto ..	10,467 13 5	No. Share No. 5.*	2 annas .	Sarfaraj Ali Taraidar and others.	2,433 7 8	..	1,051 1 1
5448/1	Kharija Taluk Dihi Rudrapur, pargana Mulghar.	5,233 10 8	No. Share No. 1.*	8 annas ..	Shibendra Nath Sinha Roy.	2,616 13 1	..	65 5 1½
5507	Kharija Taluk Balohar, pargana Shahanzhal.	1,114 12 1	Whole	....	Jogmaya Debi ..	..	373 2 4	..

*All other shares except that specified in column 4 will be excluded from sale.

[ILLEGIBLE], *for* Collector.

Jessore, the 12th August 1936.

Notification A.

NOTICE is hereby given under sections 6 and 13, Act XI of 1859, that the undermentioned estates and shares of estates in the district of Dacca will be put up for sale at the office of the Collector of that district on the 22nd September 1936, at 11 a.m., for arrears of revenue and other demands which by law are realizable as arrears of land revenue.

When in columns 5, 7 and 9 of the following statement it is stated that only a share is to be sold, it is to be understood that a separate account is kept for that share:—

Tauzi No.	Name of mahal and pargana.	Sadar jama of the whole estate.	Whether the whole estate is to be sold.	If only a share is to be sold, specification of such share or shares.	Names of proprietors of property to be sold.	If only a share is to be sold, the sadar jama of such share.	If the whole estate is to be sold, the arrears due from it.	If only a share is to be sold, the arrears due from it.
1	2	3	4	5	6	7	8	9
		Rs. a. p.				Rs. a. p.	Rs. a. p.	Rs. a. p.
205	Zamindari Chandra Naraiu Bandopadhyaya, pargana Rajnagar.	853 13 3	Whole estate.	....	Digendra Chandra Ray and others.		89 6 3	..
221	Taluq Ram Chandra Das, pargana Rajnagar.	1,966 1 8	No ..	S. A. No. 3 consisting of 2 as. 14 gds. 2 kt. 5 til.	Braja Gopal Das Basak, and Ramani Sundari Dasya.	333 2 0	..	377 3 9
				S. A. No. 5 consisting of 5 as. 2 gds. 5 til.	Basanta Kumar Kar Ray, Mohini Mohan Kar Ray, Ral Mohan Kar Ray, Hemendra Mohan Kar Ray, Jitendra Mohan Kar Ray, Dhirendra Mohan Kar Ray, Raj Kumar Banerjee, Niharan Chandra Banerjee, Niranjan Kumar Banerjee, Girindra Kumar Banerjee, Birendra Kumar Banerjee, Govinda Chandra Ghose, Nanibala Debi, auction purchaser Amulya Ratan Guha.	627 5 6	..	24 0 0
				All other shares besides that specified above will be excluded from the sale, viz., S. A. Nos. 1, 2, 4, 6, 7, 8, 9, 10, 11, 12, 13 and residue share consisting of 8 as. 3 gds. 3 kr. 10 til.				
315	Zamindari Maharaja Naba Krisna Bahadur, pargana Tappa Habeli Mahammadpur.	1,547 11 9	Whole estate.	....	Hemendra Kumar Sen, Administrator to the estate of Protulla Nalini Debi.	..	836 10 4	..
8429	Dayemi Mahal Char Kala Paharia, pargana Sonargaon.	1,037 12 9	No ..	Residue share consisting of 8 annas.	Ramani Sundari Dasya.	518 14 4	..	129 8 0
				All other shares besides that specified above will be excluded from the sale, viz., S. A. No. 1 consisting of 8 annas.				
9013	Deara Mahal Radha Kanta Ray and others, pargana Sinduri.	1,152 0 0	No ..	S. A. No. 1 consisting of 2 as. 2 gds. 1 kt. 13 til.	Kesab Lal Saha Poddar, Kishori Lal Saha Poddar and Nani Gopal Saha Poddar.	151 11 1	..	29 13 1
				S. A. No. 2 consisting of 9 as. 9 gds. 1 kr.	Munshi Bande Ali Ahammad, Inuddin Ahammad, Maulvi Montazuddin Ahammad and Munshi Kudrat Ali Ahammad.	681 4 10	..	136 0 0
				S. A. No. 4 consisting of 1 a. 4 gds. 1 kt. 14 til.	Jamal Khan ..	86 14 10	..	37 6 4
				S. A. No. 6 consisting of 14 gds. 10 til.	Radhika Lal Saha Poddar.	50 8 9	..	9 6 9
				All other shares besides that specified above will be excluded from the sale, viz., S. A. Nos. 3, 5 and residue share consisting of 2 as. 10 gds. 1 kr. 2 kt. 3 til.				
9762	Meyadi Mahal Char Dilarpur, pargana Bardakhat.	5,335 0 0	Whole estate.	....	Bipin Behari Saha Sardar and others, auction purchaser Chandra Mohan Ghose.	..	1,552 0 0	..
10408	Dayemi Mahal Char Kalim, pargana Sinduri.	1,339 6 7	No ..	S. A. No. 1 consisting of 8 annas only.	Satya Charan Dutta.	669 11 4	..	205 1 4
				All other shares besides that specified above will be excluded from sale, viz., S. A. No. 2 and residue share consisting of 8 annas.				

Tauzi No.	Name of mahal and pargana.	Sadar jama of the whole estate.	Whether the whole estate is to be sold.	If only a share is to be sold, specification of such share or shares.	Names of proprietors of property to be sold.	If only a share is to be sold, the sadar jama of such share.	If the whole estate is to be sold, the arrears due from it.	If only a share is to be sold, the arrears due from it.
1	2	3	4	5	6	7	8	9
		Rs. a. p.				Rs. a. p.	Rs. a. p.	Rs. a. p.
11047	Deara Mahal Char Dighaldi, pargana Uttar Sahapur.	639 0 0	Whole estate.	....	Harendra Nath Chakraverty and others.	..	40 0 0	..
15564	Meyadi Mahal Char Kamrangi, pargana Jahangirnagar.	1,597 7 10	No ..	S. A. No. 1 consisting of 8 annas. All other shares besides that specified above will be excluded from the sale, viz., residue share consisting of 8 annas.	Ramani Mohan Barari, settlement holder, Girish Chandra Das, Receiver to the estate of Jatirmayee Debi and others.	798 11 14	..	176 13 11
15642	Deara Mahal Char Sayedpur, pargana Tappa Ran-Bhowal.	692 0 0	Whole estate.	....	Jolekha Khatun, settlement holder, Kartickjan Bibi.	..	252 2 11	..
15862	Lakshmi Kanta Deb Bhowmik Rai Chaudhury, pargana Bardakhat.	858 14 0	Do. ..	....	Lakshmi Kanta Deb Bhowmik Ray Chaudhury and others.		214 10 0	
16032	Meyadi Mahal Char Dilarpur Nasaradi Sarkar, pargana Bardakhat.	2,723 0 0	Do. ..	....	Syed Ali Hazi and another.	..	2,061 14 3	..
16090	Deara Mahal Kismat Hargaz Birendra Nath Ray Chaudhury, pargana Isakabad.	1,342 0 0	Do. ..	....	Birendra Nath Ray Chaudhury.	..	445 13 7	..
16091	Deara Mahal Kismat Hargaz Panchoo Sarkar, pargana Isakabad.	563 0 0	Do. ..	....	Alimuddin Sarkar	..	94 0 0	..

This notice is issued in respect of instalments of revenue due on or before the 31st Jaistha, 1343 B.S., of which the latest date of payment was the 29th June 1936 (28th being Sunday).

Dacca, the 12th August 1936.

C. H. NICHOLAS, Collector.

Notification A.

NOTICE is hereby given, under sections 6 and 13 of Act XI of 1859 that the undermentioned estates in the district of Mymensingh will be put up for sale at the office of the Collector of that district on 25th September 1936, at 12 noon, for arrears of revenue the instalments of which were due on or before the 31st Jaistha, 1343 B.S., of which the latest day of payment was on 29th June 1936, and the other public demands which by Law are realisable as arrears of land revenue.

When in columns 5, 7 and 9 of the following statement it is stated that only a share is to be sold, it is to be understood that a separate account is kept for that share :—

Tauzi No.	Name of mahal and pargana.	Sadar jama of the whole estate.	Whether the whole estate is to be sold.	If only a share is to be sold, specification of such share or shares.	Names of proprietors of property to be sold.	If only a share is to be sold, the sadar jama of such share.	If the whole estate is to be sold, the arrears due from it.	If only a share is to be sold, the arrears due from it.
1	2	3	4	5	6	7	8	9
		Rs. a. p.				Rs. a. p.	Rs. a. p.	Rs. a. p.
26 including share by S. A. Nos. 2 and 9.	Joint Zemindary pargana Barabazu.	9,852 5 4	No ..	16 annas share of the estate excluding shares covered by S. A. Nos. 1, 7, 8, 10, 11, 12, 13, 14, 15, 16, 17, 18, 19, 20, 21, 22, 23, 24, 25, and 26 will be sold.	Heramba Chandra Choudhury, Syed Amirulla, Syed Anwarul Hoque, Abdul Mannan and others.	4,782 14 4	..	6,550 11 0

Mymensingh, the 14th August 1936.

[ILLEGIBLE], *for* Collector.

Notification A.

NOTICE is hereby given under sections 6 and 13, Act XI of 1859, that the undermentioned estates and shares of estates in the district of Tippera will be put up for sale at the office of the Collector of that district on the 21st September 1936 at 12 noon for arrears of revenue and other demands which by law are realizable as arrears of land revenue.

When in columns 5, 7 and 9 of the following statement it is stated that only a share is to be sold, it is to be understood that a separate account is kept for that share :—

Tauzi No.	Name of mahal and pargana.	Sadar jama of whole estate.	Whether the whole estate is to be sold.	If only a share is to be sold, specification of such share or shares.	Names of proprietors of property to be sold.	If only a share is to be sold, the sadar jama of such share.	If the whole estate is to be sold, the arrears due from it.	If only a share is to be sold, the arrears due from it.
1	2	3	4	5	6	7	8	9
		Rs. a. p.				Rs. a. p.	Rs. a. p.	Rs. a. p.
22	Bardakhat pargana, 5 gds. 2 c. 1 kt. kismat, pargana Bardakhat.	2,806 9 1	..	Tauzi No. 22/9, hissa 2 as. 19 gds. 3 c. 1 kt. 3/8 dt. All other shares than that specified will be excluded from the sale.	Taleb Ali *alias* Alep Ali and others.	526 4 8	..	112 13 4
26	Priya Nath Basak, pargana Bardakhat.	3,227 3 0	Whole	....	Mr. S. Guha, Bar.-at-law, Common Manager on behalf of Khirode Nath Basak and others.	..	807 0 0	..
75	Suresh Chandra Mukhapadhya, pargana Mahabbatpur.	964 14 10	Do. ..	....	Suresh Chandra Mukhapadhya and another.	..	241 0 0	..
94	Bipin Behari Roy Choudhury, pargana Hommabad.	678 2 1	Do. ..	....	Bepin Behari Roy Choudhury.	..	170 0 0	..
97	1 anna share of pargana Hommabad, pargana Hommabad.	6,813 0 8	..	Tauzi No. 97/R, hissa 4 as. 13 gds. 1 c. 1 kt. All other shares than that specified will be excluded from the sale.	Ananda Priya Baishnabi.	1,987 2 2	..	189 5 2
190	Nowra mahal, pargana Syampur.	806 11 9	Whole	....	Subarna Bala Debi and another.	..	336 14 9	..
199	Narayanpur pargana, 7 as. 5 gds. kismat, pargana Narayanpur.	1,193 10 3	..	Tauzi No. 199/R, hissa 14 as. 1 gd. 3 c. 1½ kt. All other shares than that specified will be excluded from the sale.	Kafurennessa Choudhurany and others.	1,051 4 11	..	204 1 4
211	Forkabad Tape, 3 as. 5 gds. kismat, pargana Forkabad Tape.	2,347 11 9	Whole	....	Srimati Hafeza Khatoon Choudhurany.	..	521 2 9	..
212	Jajneswar Bose, pargana Forkabad Tape.	768 5 6	Do. ..	....	Kshetra Mohan Mukherjee.	..	142 0 0	..
281	Jajneswar Bose, pargana Singergaon.	1,155 11 4	Do. ..	....	Ditto ..	..	288 14 0	..
372	Ahmedpur mauza, 10 as. 13 gds. 1 c. 1 kt. kismat, pargana Bardakhat.	818 15 0	Do. ..	....	Ananga Mohan Roy Choudhury, sebayat for the estate of Sree Sree Kumadeswar Mahadeb.	..	224 14 6	..
406	Borochar No. 173 Decree under Act 2 of 1819, pargana Mahabbatpur.	1,584 12 0	..	Tauzi No. 406/R, hissa 5 as. 6 gds. 2 c. 2 kt. All other shares than that specified will be excluded from the sale.	Siddhi Gopal Sukul and others.	528 4 0	..	56 2 11
465	Lajair Joar, hissa 10 as. 13 gds. 1 c. 1 kt., pargana Bardakhat.	770 12 0	..	Tauzi No. 465/R, hissa 4 annas. Tauzi No. 465/1, hissa 12 annas. All other shares than that specified will be excluded from the sale.	Akhil Chandra Das and another.	192 11 0	..	35 11 6
					Ditto	578 1 0	..	107 5 6
1910	Punshai Kismat Dehi No. 7, hissa 9 annas, pargana Mehar.	671 14 5	Whole	....	Salamatulla Miah ..	..	125 15 8	..
2099	Surplus alluvial accretion 2nd and 5th parts land to Borochar No. 173, Thak No. 3566 pargana Mahabbatpur.	757 9 0	Do. ..	....	Lasmi Narayan Sukul and others.	..	20 7 8	..

Tauzi No.	Name of mahal and pargana.	Sadar jama of whole estate.	Whether the whole estate is to be sold.	If only a share is to be sold, specification of such share or shares.	Names of proprietors of property to be sold.	If only a share is to be sold, the sadar jama of such share.	If the whole estate is to be sold, the arrears due from it.	If only a share is to be sold, the arrears due from it.
1	2	3	4	5	6	7	8	9
		Rs. a. p.				Rs. a. p.	Rs. a. p.	Rs. a. p.
2296	Sonapur and Tazpur Char, pargana Zazira.	870 10 0	Whole ..	. . .	Mr. A. M. Paruk ..	..	370 10 0	..
2665	Bisara Joar, hissa 5 as. 6 gds. 2 c. 2 kt., pargana Bardakhat.	1,047 1 0	Do. ..	....	Prafulla Kumar Roy Choudhury.	..	194 6 4	..
2749	Diara Taluk Kamta Prasad Sukul, pargana Mahabbatpur.	1,149 0 0	Do. ..	....	Ganga Nayaran Sukl and others.	..	52 5 2	..
2766	Joar Siddheswari, hissa 1 a. 18 gds. 3 c., pargana Bardakhat.	709 15 6	Do. ..	....	Kalipada Das Gupta and another.	..	107 0 0	..
3057	Hem Nalini Choudhurany, pargana Bardakhat.	744 14 0	Do. ..	....	Srimati Hem Nalini Choudhurany.	..	186 0 0	..
3210	Diara Char Webster, pargana Rajnagar.	775 0 0	Do. ..	....	Shiba Prosad Sukul and others.	..	18 14 5	..
3407	Madan Gopal Sukul, pargana Mehar.	1,002 8 0	Do. ..	....	Madan Gopal Sukul and others.	..	251 0 0	..
3408	Taluq Gobinda Narayan Sukul, pargana Mehar.	1,002 8 0	Do. ..	....	Gobinda Narayan Sukul and others.	..	251 0 0	..
3409	Andheari Sukul, pargana Mehar.	1,494 14 0	Do. ..	....	Rameswar Sukul and others.	..	374 0 0	..
3665	Taluq Aktar Begum, pargana Bardakhat.	1,871 14 0	Do. ..	....	Sm. Wanija Johera *alias* Eakuti Begum.	..	468 0 0	..
3672	Radha Krishna Choudhury, pargana Bardakhat.	555 15 6	Do. ..	....	Upendra Chandra Das and others.	..	139 0 0	..
3823	Ashraf Raja Choudhury, pargana Forkanad Tape.	768 5 0	Do. .	....	Khetra Mohan Mukhapadhaya	..	241 6 6	..
3854	Jogendra Chandra Roy Choudhury, pargana Hommabad.	678 8 0	Do. .	....	Jogendra Chandra Roy Choudhury.	..	234 11 6	.
3993	Diara Mahal Tajpur Sonapur, pargana Zazira.	1,283 0 0	Do ..	....	Mr. A. M. Paruk .	..	300 0 0	.

This notice is issued in respect of instalments of revenue due on or before the 31st Jaistha, 1343 B.S., of which the latest date of payment was 29th June 1936.

J. P. RAY, Additional Collector.

Comilla, the 14th August 1936.

Notification A.

NOTICE is hereby given under sections 6 and 13, Act XI of 1859, and under section 11, Act VII of 1868, that the undermentioned tenures and shares of tenures in the district of Tippera will be put up for sale at the office of the Collector of that district on the 21st September 1936 at 12 noon for arrears of revenue and other demands which by law are realizable as arrears of land revenue.

Tauzi No	Name of tenure and pargana	Sadar jama of whole tenure	Whether the whole tenure is to be sold	If only a share is to be sold, specification of such share or shares	Names of proprietors of property to be sold.	If only a share is to be sold, the sadar jama of such share	If the whole tenure is to be sold, the arrears due from it	If only a share is to be sold, the arrears due from it.
1	2	3	4	5	6	7	8	9
		Rs a. p					Rs a p	
1939	Joar Krishnanagar, hissa 5 as 6 gds 2k 2kt, Khatian No 2 of Gournagar, pargana Bardakhat.	3,164 12 0	Whole		Jyotirmayee Roy Choudhurany and others.		1,415 15 3 Cess 43 7 6 1,459 6 9	
2686	Myadi Patni Taluk Durlav Ram Deb, pargana Bardakhat.	1,991 18 0	Do. .	. . .	Mana Mohon Roy Choudhury.	.	890 11 4 Cess - 34 9 4 925 4 8	..
2687	Ditto ..	1,445 3 0	Do. ..	....	Upendra Lochan Majumdar and others	..	721 15 3 Cess-- 29 4 2 751 3 5	..
2691	Myadi Patni Taluk Hriday Ram Das Gupta, Jote No. 47, Khatian No 354, pargana Bardakhat.	855 4 0	Do. .	. . .	Amrita Sekhar Das Gupta and others.	..	213 13 0 Cess - 12 6 6 226 3 6	..
2704	Joar Dhanpatikhola	890 9 0	Do. ..	....	Prasanna Kumar Datta and others.	..	457 3 3	.
2704	Joar Dhanpatikhola, hissa 2 as. 17 gds. 3 c. 2 kt., Jote No. 2, Khatian No. 7, pargana Bardakhat.	644 15 0	Do. ..	....	Radha Charan Nath Bhoumic and others.	..	161 4 0	..
2712	Joar Kadair Patni Taluk Krishna Chandra Roy.	2,603 0 0	Do. ..	....	Kanak Lata Naha	..	962 15 3 Cess 32 12 0 995 11 3	..
2713	Mauza Char Lalpur, pargana Bardakhat.	1,518 6 0	Do. ..	....	Bharat Chandra Roy Choudhury.	..	732 1 6	..
2726	Taluk Ram Hari Das pargana Bardakhat.	1,766 8 0	Do. ..	....	Mahendra Chandra Saha and others.	..	351 0 7 Cess - 23 15 9 375 0 4	..
2730	Mahal Sahapur Dighirpur, pargana Bardakhat.	6,608 13 0	Do. ..	....	Rai Kumar Roy Choudhury, Common Manager on behalf of Sarada Sundari Choudhurany and others.	..	1,336 3 3	..
2915	Joar Kadair Patni Taluk Krishna Chandra Roy, pargana Bardakhat.	1,258 0 0	Do. ..	....	Ranada Kishore Roy and others.	..	156 12 0 Cess 6 7 6 163 3 6	..

This notice is issued in respect of instalments of revenue due on or before the 31st Jaistha, 1343B.S., of which the latest date of payment was 29th June 1936.

J. P. RAY, Additional Collector.

Comilla, the 14th August 1936.

Notification A.

NOTICE is hereby given, under sections 6 and 13, Act XI of 1859, that the undermentioned estates and shares of estates in the district of Bogra will be put up for sale at the office of the Collector of that district on the 25th September 1936, at 12 noon, for arrears of revenue and other demands which by law are realizable as arrears of land revenue.

When in columns 5, 7 and 9 of the following statement it is stated that only a share is to be sold, it is to be understood that a separate account is kept for that share :—

Tauzi No.	Name of mahal and pargana.	Sadar jama of whole estate.	Whether the whole estate is to be sold.	If only a share is to be sold, specification of such share or shares.	Name of proprietors of property to be sold.	If only a share is to be sold, the Sadar jama of such share.	If the whole estate is to be sold, the arrears due from it.	If only a share is to be sold, the arrears due from it.
1	2	3	4	5	6	7	8	9
		Rs. a. p.				Rs. a. p.	Rs. a. p.	Rs. a. p.
2 Residuary.	K. P. Shelbarsha, pargana Shelbarsha.	12,848 4 6	No. ..	6 g. 2 k. 2 kt. of mauzas Balabari, police-station Panchupur (Rajshahi), Andhusura, police-station Singra (Rajshahi), Paranpur and others, police-station Dupchanchia, Alokchhatra and others, police-station Kahaloo, Tundpara and others, police-station Sherpur, Ashokola and others, police-station Bogra, Joydebpur and others, police-station Adamdighi, Harisona and others, police-station Tarua (Pabna), Chhatun and others, police-station Shibganj, Talkhur, police-station Khetlal 3 g. 1 k. 1 kt. of mauzas Damai and others, police-station Kahaloo, Phulbari and others, police-station Bogra. 17 g. 2 k. of mauzas Sillimpur and another, police-station Bogra. 1 a. 15 g. of mauzas Sakpala and others, police-station Bogra. 8 g. 1 k. 1 kt. of mauzas Chandmua Haripur and others, police-station Bogra. 1 a. 6 g. 2 k. 2 kt. of mauzas Titkhur and another, police-station Bogra. 2 as. 3 g. 3 k. of mauzas Sujabadand others, police-station Bogra. 9 g. 2 k. 2 kt. 6 til of mauzas Chakbrindaban and others, police-station Bogra. All other shares than that specified will be excluded from sale.	Md. Mahafuzal Hoque Abu Taib *alias* Raja Miah.	406 4 6	..	53 1 5
2, S. A. 9.	Ditto ..	12,848 4 6	No ..	16 annas of mauza Katnalgar, police-station Kahaloo. 8 annas of mauzas Damai and others, police-station Kahaloo.	Syed Abdur Rub Choudhury.	138 13 9	..	31 9 4
2, S. A. 61.	Ditto ..	12,848 4 6	No ..	3 as. 1 g. 2 k. 2 kt. of mauza Malibari, police-station Kahaloo. 1 a. 15 g. 2 k. 1 kt. 5 til of mauza Bolgharia, police-station Kahaloo.	Adya Nath Bashak and others.	37 10 8	..	1 1 10

Tauzi No.	Name of mahal and pargana.	Sadar jama of whole estate.	Whether the whole estate is to be sold.	If only a share is to be sold, specification of such share or shares.	Name of proprietors of property to be sold.	If only a share is to be sold, the Sadar jama of such share.	If the whole estate is to be sold, the arrears due from it.	If only a share is to be sold, the arrears due from it.
1	2	3	4	5	6	7	8	9
		Rs. a. p.				Rs. a. p.	Rs. a. p.	Rs. a. p.
2, S. A. 103.	K. P. Shelbarsha, pargana Shelbarsha.	12,848 4 6	No ..	8 as. 8 g. 1 k. 1 kt. of mauzas Sahardighi and others, police-station Bogra. 1 a. 8 g. 1 k. 1 kt. of mauzas Belgharia and others, police-station Dupchanchia, Kazipara and others, police-station Kahaloo, Joydebpur, police-station Adamdighi. All other shares than that specified will be excluded from sale.	Radharani Dashya Choudhurani.	593 5 3	..	35 15 8
					Total ..	1,176 2 2	..	121 12 3
43	Taraf Khadash, pargana Shelbarsha.	2,484 1 8	Yes ..	The whole estate will be sold.	Makhan Lal Dutt and others.	..	206 15 0	..
74 Residuary.	Dihi Palikandi, pargana Protapbaju.	5,561 13 10 Police— 358 6 5	No ..	1 anna of mauzas Patti Palikandi, police-station Shibganj, Bharkuthi, police-station Bogra, Rameswarpur, police-station Gabtali, Chakratinath, police-station Shariakandi. 8 annas of mauzas Bahadurpur and others, police-station Gabtali, Dakshinbhag and others, police-station Bogra, Benipara and others, police-station Shibganj, Saro and others, police-station Sherpur, Digdair, police-station Shariakandi, Patti Chapachil, police-station Bogra. 4 annas of Chapachil and another, police-station Shibganj.	Satyendra Narayan Munshi and others.	938 11 3 Police— 74 3 2	..	7 6 5 Police— 14 12 8
74, S. A. 5.	Ditto ..	5,561 13 10 Police— 358 6 5	No ..	1 a. 6 g. 2 k. 2 kt. of mauzas Rameswarpur and another, police-station Gabtali.	Mahendra Narayan Majumder.	71 6 3 Police— 4 9 3	..	4 12 6 Police— 0 7 9
74, S. A. 6.	Ditto ..	5,561 13 10 Police— 358 6 5	No ..	1 a. 6 g. 2 k. 2 kt. of mauzas Mahisaban and others, police-station Gabtali, Bharkuthi, police-station Bogra, Chakratinath, police-station Shariakandi, Patti Palikandi, police-station Shibganj. 13 g. 1 k. 1 kt. of mauzas Chapachil and another, police-station Shibganj.	Ditto ..	71 6 4 Police— 4 9 3	..	4 12 9 Police— 0 7 9
74, S. A. 7.	Ditto ..	5,561 13 10 Police— 358 6 5	No ..	1a. 2g. 2k. of mauzas Rameswarpur and others, police-station Gabtali, Bharkuthi, police-station Bogra, Chakratinath, police-station Shariakandi, Patti Palikandi, police-station Shibganj. 11 g. 1 k. of mauzas Chapachil and another, police-station Shibganj.	Radha Kishore Tarafder and another.	120 7 7 Police— 7 12 0	..	8 1 10 Police— 0 13 6
74, S. A. 8.	Ditto ..	5,561 13 10 Police— 358 6 5	No ..	2 annas of mauzas Rameswarpur and others, police-station Gabtali, Bharkuthi, police-station Bogra, Chakratinath, police-station Shariakandi, Patti Palikandi, police-station Shibganj. 1 anna of mauzas Chapachil and another, police-station Shibganj.	Radhika Mohan Munshi and others.	215 14 8 Police— 11 15 5	..	68 9 4 Police— 4 10 7

Tauzi No.	Name of mahal and pargana.	Sadar jama of whole estate.	Whether the whole estate is to be sold.	If only a share is to be sold, specification of such share or shares.	Name of proprietors of property to be sold.	If only a share is to be sold, the Sadar jama of such share.	If the whole estate is to be sold, the arrears due from it.	If only a share is to be sold, the arrears due from it.
1	2	3	4	5	6	7	8	9
		Rs. a. p.				Rs. a. p.	Rs. a. p.	Rs. a. p.
74, S. A. 9.	Dihi Palikandi, pargana Protapbaju.	5,561 13 10 Police — 358 6 5	No ..	1 anna of mauzas Rameswarpur and others, police-station Gabtali, Bharkuthi, police-station Bogra, Chakratinath, police-station Shariakandi, Patti Palikandi, police-station Shibganj. 10 gandas of mauzas Chapachil and others, police-station Shibganj.	Syama Kishore Munshi.	107 15 10 Police— 5 15 8	..	34 5 8 Police— 2 5 3
74, S. A. 10.	Ditto ..	5,561 13 10 Police — 358 6 5	No ..	1a. 6g. 2k. 2 kt. of mauzas Rameswarpur and others, police-station Gabtali, Bharkuthi, police-station Bogra, Chakratinath, police-station Sharmkandi, Patti Palikandi, police-station Shibganj. 13g. 1k. 1 kt. of mauzas Chapachil and others, police-station Shibganj.	Dwijendra Lal Majumder and others.	142 12 6 Police 9 2 10	..	9 12 3 Police— 1 0 1
74, S. A. 11.	Ditto ..	5,561 13 10 Police — 358 6 5	No ..	1a. 15g. of mauzas Rameswarpur and others, police-station Gabtali, Bharkuthi, police-station Bogra, Chakratinath, police-station Shariakandi, Patti Palikandi, police-station Shibganj. 1a. 8g. 3k. of mauzas Chapachil and another, police-station Shibganj.	Profulla Chandra Tarafder and others.	187 6 0 Police 12 1 0	.	12 10 0 Police 1 5 3
71, S. A. 12	Ditto ..	5,561 13 10 Police— 358 6 5	No ..	1a. 6g 2k. 2kt. of mauzas Mahiran, police-station Gabtali, Bharkuthi, police-station Bogra, Chakratinath, police-station Shariakandi, Patti Palikandi, police-station Shibganj. 13g 1k. 1kt. of mauzas Chapachil and another, police-station Shibganj	Kali Gopal Majumder and others.	142 12 6 Police— 9 2 10	..	9 12 3 Police— 1 0 1
71, S. A. 24.	Ditto ..	5,561 13 10 Police 358 6 5	No ..	3as. 12g. 2k of mauzas Rameswarpur and others, police-station Gabtali, Bharkuthi, police-station Bogra, Chakratinath, police-station Sharjakandi, Patti Palikandi, police-station Shibganj. 1a. 5g. of mauzas Chapachil and another, police-station Shibganj All other shares than that specified will be excluded from sale.	Debendra Kishore Tarafder and others. Total ..	390 2 0 Police 23 0 9 2,388 14 11	.. ..	22 0 9 Police— 2 9 2 182 3 9
91, S. A 1.	Dihi Ullpur, pargana Mehaman shahi.	4,385 5 0	No .	1a. 2g. 2k. of mauzas Aman and others, police-station Sherpur, Kundais and others, police-station Bogra, Sariabad, police-station Singra (Rajshahi).	Debendra Kishore Tarafder and others.	238 9 2	..	10 7 4
91, S. A. 2.	Ditto ..	4,385 5 0	No	1a. 2g. 2k. of above mauzas.	Radha Kishore Tarafder and another.	238 9 2	..	10 7 4
91, S. A. 3.	Ditto ..	4,385 5 0	No .	13g. 1k 1kt. of above mauzas.	Mahendra Narayan Majumder.	141 6 1	..	11 6 11
91, S. A. 4.	Ditto .	4,385 5 0	No ..	1a. 6g. 2k. 2kt. of above mauzas.	Rajendra Lal Majumder.	282 12 8	..	22 12 4
91, S. A. 5.	Ditto ..	4,385 5 0	No ..	1 anna of above mauzas.	Syama Kishore Munshi and others.	212 3 0	..	16 13 9
91, S. A. 6.	Ditto .	4,385 5 0	No .	13g. 1k 1kt of above mauzas.	Mahendra Narayan Majumder.	141 6 1	.	11 6 1

Tauzi No.	Name of mahal and pargana.	Sadar jama of whole estate.	Whether the whole estate is to be sold.	If only a share is to be sold, specification of such share or shares.	Name of proprietors of property to be sold.	If only a share is to be sold, the Sadar jama of such share.	If the whole estate is to be sold, the arrears due from it.	If only a share is to be sold, the arrears due from it.
1	2	3	4	5	6	7	8	9
		Rs. a. p.				Rs. a. p.	Rs. a. p.	Rs. a. p.
91, S. A. 7.	Dihi Ulipur, pargana Mehamansahi.	4,385 5 0	No ..	2 annas of mauzas Aman and others, police-station Sherpur, Kundais and others, police-station Bogra, Sariabad, police-station Singra (Rajshahi).	Radhika Mohan Munshi and others.	424 7 0	..	34 2 8
91, S. A. 8.	Ditto ..	4,385 5 0	No ..	1a. 15g. of above mauzas.	Profulla Chandra Tarafder and another.	371 1 11	..	21 3 5
91, S. A. 9.	Ditto ..	4,385 5 0	No ..	1a. 6g. 2k. 2kt. of above mauzas.	Kali Gopal Majumder and others.	82 12 2	..	22 12 4
91, S. A. 13.	Ditto ..	4,385 5 0	No ..	2as. 10g. of above mauzas.	Radhika Mohan Munshi and others.	530 9 11	..	42 11 11
91, S. A. 15.	Ditto ..	4,385 5 0	No ..	1a. 15g. of mauzas Srirampur and others, police-station Sherpur.	Srish Chandra Sanyal.	108 7 9	..	8 10 1
				All other shares than that specified will be excluded from sale.	Total ..	2,772 5 0	..	230 14 2
97 Residuary.	Dihi Syedpur, pargana Mehamansahi.	5,327 6 2 Police— 53 5 4	No ..	16 annas of mauzas Jamur and others, police-station Sherpur, Baldipara and others, police-station Taras (Pabna), Maria and others, police-station Singra (Rajshahi), Khiali and others, police-station Raiganj (Pabna). All other shares than that specified will be excluded from sale.	Kumud Nath Choudhury	5,304 8 8 Police— 53 1 9	..	450 13 5 Police— 10 10 0
100 Residuary.	Dihi Subhagachha, pargana Mehamansahi.	3,590 6 0	No ..	8 annas of mauzas Khanpur and another, police-station Sherpur, Chandipur, police-station Singra (Rajshahi), Subhagachha, police-station Sherpur.	Nagendra Nath Sanyal and others.	112 11 3	..	4 13 7
100, S. A. 1.	Ditto ..	3,590 6 0	No ..	9 annas of mauzas Helanchapara, police-station Bogra, Baora and others, police-station Sherpur, Khodadpur and another, police-station Raiganj (Pabna). 4as. 10g. of mauza Subhagachha, police-station Sherpur. 6 annas of mauza Phukpal, police-station Singra (Rajshahi).	Kumud Nath Choudhury.	710 5 0	..	58 7 11
100, S. A. 19.	Ditto ..	3,590 6 0	No ..	3 as. 10 g. of mauzas Katham, police-station Singra (Rajshahi), Sadulbari and others, police-station Sherpur, Sengati and another, police-station Raiganj (Pabna). 1a. 15g. of mauzas Krishnapur, police-station Taras (Pabna), Gillabari and another, police-station Sherpur. 17g. 2k. of mauza Darikhaga, police-station Sherpur. 8g. 3k. of mauzas Badlason and another, police-station Singra (Rajshahi), Subhagachha, police-station Sherpur. All other shares than that specified will be excluded from sale.	Srish Chandra Sanyal. Total	247 14 1 1 070 14 4	.. ..	20 8 3 88 13 9

Tauzi No.	Name of mahal and pargana.	Sadar jama of whole estate.	Whether the whole estate is to be sold.	If only a share is to be sold, specification of such share or shares.	Name of proprietors of property to be sold.	If only a share is to be sold, the Sadar jama of such share.	If the whole estate is to be sold, the arrears due from it.	If only a share is to be sold, the arrears due from it.
1	2	3	4	5	6	7	8	9
		Rs. a. p.				Rs. a. p.	Rs. a. p.	Rs. a. p.
103	Dihi Damdighi, pargana Mehamansahi.	512 14 7	Yes ..	The whole estate will be sold.	Dhirendra Chandra Neogi and others.	..	45 11 3	..
104, S. A. 1.	Dihi Eksingh, pargana Mehamansahi.	4,026 9 10	No ..	15 gandas of mauzas Birkulla, police-station Bogra, Bhadra and others, police-station Sherpur, Indrasan, police-station Singra (Rajshahi). 1a. 14g. 1k. 8til of mauzas Darikandi, police-station Bogra, Joanpur and others, police-station Sherpur, Salimpur and others, police-station Singra (Rajshahi). 1a. 3g. 2k. 17til of mauza Barapathar, police-station Bogra. 8 g. 2 k. 16 til of mauza Posi, police-station Sherpur. 15 gandas of mauza Sakdaha, police-station Dhunot.	Profulla Chandra Saha Choudhury.	188 12 1	..	15 9 7
104, S. A. 2.	Ditto ..	4,026 9 10	No ..	1 anna of mauzas Birkulla, police-station Bogra, Bhadra and others, police-station Sherpur, Sakdaha, police-station Dhunot, Indrasan, police-station Singra (Rajshahi). 2as. 5g. 2k. 2kt. 12til of mauzas Darikandi, police-station Bogra, Joanpur and others, police-station Sherpur, Salimpur and others, police-station Singra (Rajshahi). 1 a. 11 g. 1 k. 2 kt. 3 til of mauza Barapathar, police-station Bogra. 11 g. 1 k. 2 kt. 4 til of mauza Posi, police-station Sherpur	Bakhal Chandra Saha Choudhury and another.	251 10 8	..	3 2 [illegible]
104, S. A. 3.	Ditto ..	4,026 9 10	No ..	2 as. 10g. of mauzas Birkulla, police-station Bogra, Bhadra and others, police-station Sherpur, Indrasan, police-station Singra (Rajshahi). 5 as. 14 g. 1 k. 8 til of mauzas Darikandi, police-station Bogra, Joanpur and others, police-station Sherpur, Salimpur and others, police-station Singra (Rajshahi). 3 as. 18 g. 2 k. 17 til of mauza Barapathar, police-station Bogra. 1 a. 8 g. 2 k. 17 til of mauza Posi, police-station Sherpur. 2 as. 10 g. of mauza Sakdaha, police-station Dhunot. 2 annas of mauza Sherpur, police-station Sherpur.	Annapurna Choudhurani.	629 2 0	..	51 15 10
104, S.A. 8.	Ditto ..	4,026 9 10	No ..	1a. 15g. of mauzas Birkulla, police-station Bogra, Bhadra and others, police-station Sherpur, Indrasan, police-station Singra (Rajshahi). 4 annas of mauzas Darikandi, police-station Bogra, Joanpur and others, police-station Sherpur, Salimpur and others, police-station Singra (Rajshahi). 2 as 15 g. of mauza Barapathar, police-station Bogra. 6g. 2k. 2 kt. of mauza Posi, police-station Sherpur 1 a. 15g. of mauza Sakdaha, police-station Dhunot.	Syama Kishore Munshi and others.	440 5 10	..	36 0 4

Tauzi No.	Name of mahal and pargana.	Sadar jama of whole estate.	Whether the whole estate is to be sold.	If only a share is to be sold, specification of such share or shares.	Name of proprietors of property to be sold.	If only a share is to be sold, the Sadar jama of such share.	If the whole estate is to be sold, the arrears due from it.	If only a share is to be sold, the arrears due from it.
1	2	3	4	5	6	7	8	9
		Rs. a. p.				Rs. a. p.	Rs. a. p.	Rs. a. p.
104, S.A. 15.	Dihi Eksingh, pargana Mehamansahi.	4,026 9 10	No ..	3 as. 10 g. of mauzas Bihigram and another, police-station Bogra, Kumarghat and another, police-station Sherpur, Narateghari, police-station Taras (Pabna). 1 a. 15 g. of mauzas Chakrajib and others, police-station Sherpur, Narlia, police-station Bogra. 17 g. 2 k. of mauzas Birkulia, police-station Bogra, Bhadra, police-station Sherpur, Indrasan, police-station Singra (Rajshahi), Sakdaha police-station Dhunot. 1 a. 5 g. of mauzas Raros and another, police-station Sherpur. 3 as. 15 g. of mauzas Eksingh, police-station Singra (Rajshahi). All other shares than that specified will excluded from sale.	Srish Chandra Sanyal. Total ..	250 12 3 1,760 11 4	.. ..	20 11 8 127 14 2
148, Residuary.	Choudhurai Chhatiagram, pargana Khatta.	603 8 0	No ..	9 as. 4 g. 2 k. of mauzas Panchsa and others, police-station Dupchanchia, Chiarigram and others, police-station Adamdighi, Pirojpur and others, police-station Naogaon (Rajshahi).	Radhika Mohan Munshi and others.	340 7 6	..	55 10 8
148, S.A. 1.	Ditto ..	603 8 0	No ..	6 as. 15g 2 k. of above mauzas. All other shares than that specified will be excluded from sale.	Kishori Mohan Sanyal and others. Total ..	257 0 6 603 8 0	.. ..	27 4 6 83 0 2
192, S. A. 2.	Chhandata, pargana Dayanagar.	1,373 11 8	No ..	6 annas of mauzas Taral and others, police-station Bogra, Uttar Debkhanda and others, police-station Kahaloo. All other shares than that specified will be excluded from sale.	Atul Krishna Baral.	515 12 4	..	25 8 0
195, Residuary.	K. P. Talukjoy, pargana Talukjoy.	1,984 6 11	No ..	2 as. 15 g. 7 ch of mauzas Chhatinali, and others, police-station Panchbibi, Helkunda and others, police-station Jaipurhat.	Suresh Chandra Sarker and others.	338 11 9	..	14 4 10
195, S.A. 3.	Ditto ..	1,984 6 11	No ..	2 as. 10 g. of mauzas Pamal and others, police-station Panchbibi, Helkunda and others, police-station Jaipurhat.	Surendra Nath Chattopadhya and others.	310 6 6	..	33 14 6
195, S.A.14.	Ditto ..	1,984 6 11	No ..	16 g. 2 k. of mauzas Pamal and others, police-station Panchbibi, Helkunda and others, police-station Jaipurhat.	Hemanta Kumar Sarker and others. Total ..	102 8 6 751 10 9	.. ..	11 2 7 59 5 11

Tauzi No.	Name of mahal and pargana.	Sadar jama of whole estate.	Whether the whole estate is to be sold.	If only a share is to be sold, specification of such share or shares.	Name of proprietors of property to be sold.	If only a share is to be sold, the Sadar jama of such share.	If the whole estate is to be sold, the arrears due from it.	If only a share is to be sold, the arrears due from it.
1	2	3	4	5	6	7	8	9
		Rs. a. p.				Rs. a. p.	Rs. a. p.	Rs. a. p.
209, Residuary.	Dihi Magura, pargana Shibpur.	4,566 14 4	No ..	1 a. 15 g. 2 k. 13 tl of mauzas Khorna and others, police-station Bogra, Abilamba and others, police-station Kahaloo.	Sasibala Debi ..	507 6 11	..	75 12 5
209, S. A. 2.	Ditto ..	4,566 14 4	No ..	5as. 6 g. 2 k. 2 kt. of mauzas Khorna and others, police-station Bogra, Abilamba and others, police-station Kahaloo.	Upendra Chandra Choudhury.	1,522 4 10	..	75 12 4
209, S. A. 4.	Ditto ..	4,566 14 4	No .	5 as. 6 g. 2 k. 2 kt. of mauzas Khorna and others, police-station Bogra, Abilamba and others, police-station Kahaloo.	Digendra Nath Sarker and others.	1,522 4 9	..	78 12 3
				All other shares than that specified will be excluded from sale.				
					Total ..	3,552 0 6	..	225 5 0
684 Residuary.	Shekta and others pargana Khangolr.	648 11 10	No .	11 as. 10 g. of mauzas Sekta and others, police-station Panchbibi.	Baram Uddin Choudhury.	466 9 5	..	46 13 5
684, S. A. 1.	Ditto ..	648 11 10	No ..	2 as. 10 g. of above mauzas.	Baram Uddin Choudhury and others.	101 0 1	..	7 2 10
684, S. A. 4.	Ditto ..	648 11 10	No ..	2 annas of mauzas Sekta and others, police-station Panchbibi.	Baram Uddin Choudhury.	81 2 4	..	8 14 4
				All other shares than that specified will be excluded from sale.				
					Total ..	648 11 10	..	82 14 7
688	Nandura and others, pargana Apoil.	676 9 8	Yes ..	The whole estate will be sold.	Gobinda Madhab Deb and others.		46 9 8	..

This notice is issued in respect of instalments of revenue which were due on or before the 31st Jaistha, 1343 B.S., of which the latest date of payment was 28th June 1936.

T. I. M. NURANNABI CHAUDHURI, Collector.

Bogra, the 19th August 1936.

Sale notice of Green and Dry Sal trees and timber in the Buxa Division, Bengal, 1936.

THE Divisional Forest Officer, Buxa Division, will offer for sale by public auction at the Forest Office, at Rajabhatkhawa, Eastern Bengal Railway, on the 3rd September 1936, beginning at 11 a.m., the following lots under the conditions specified below.

Intending purchasers are invited to inspect the lots before sale. Applications should be made to the Range Officers concerned regarding the boundaries of the lots :—

Clear Felling lots of 1936-37.

Rajabhatkhawa Range.

Lot No.	Species.	Under 2'.	2'0" to 2'5".	2'6" to 2'11".	3'0" to 3'5".	3'6" to 3'11".	4'0" to 4'5".	4'6" to 4'11".	5'0" to 5'5".	5'6" to 5'11".	6'0" and over.	Total.	Total number of trees in the lot.	Locality.
R/1	Green standing Sal ..	..	3	9	6	8	16	22	28	15	79	186	*190 (Sal) ..	South Rajabhatkhawa Compartment 10, Section I.
	Green badly shaped Sal	..	..	..	1	..	..	..	1	..	1	3		
	Dry standing Sal ..	..	1	..	..	..	..	..	..	..	..	1		
R/2	Green standing Sal ..	..	3	10	15	21	19	34	40	26	35	203	*209 (Sal) ..	South Rajabhatkhawa Compartment 10, Section III.
	Dry standing Sal ..	..	4	..	..	..	..	..	..	..	..	4		
	Green badly shaped Sal	..	..	..	1	..	..	..	..	..	1	2		
					No. C.ft.							No. C. ft.		
	Dressed piece ..	..	..	..	1 12·5	..	..	..	..	..	..	1 12·5	*1 Dressed piece	
R/3	Green standing Sal ..	..	14	21	23	30	36	47	51	30	45	297	*302 (Sal) ..	South Rajabhatkhawa Compartment 10, Section III.
	Dry standing Sal ..	..	1	..	..	..	..	..	..	..	..	1		
	Green badly shaped Sal	..	..	..	1	..	1	..	1	..	1	4		
R/4	Green standing Sal ..	..	3	4	19	23	23	25	23	28	45	193	200 (Sal) ..	South Rajabhatkhawa Compartment 10, Section IV.
	Dry standing Sal ..	..	1	2	1	..	..	..	..	..	..	4		
	Dry top broken Sal ..	..	..	..	..	..	1	1	..	..	1	3		
R/5	Green standing Sal ..	2	7	4	10	24	20	21	20	18	46	172	180 (Sal) ..	South Rajabhatkhawa Compartment 10, Section V.
	Dry standing Sal ..	..	1	3	2	..	..	1	..	..	..	7		
	Dry uprooted Sal ..	..	..	1	..	..	..	..	..	..	..	1		
R/6	Green standing Sal ..	..	..	2	10	5	18	15	23	19	30	122	151 (Sal) ..	Nimati Compartment I, Section I.
	Green Sal, forked ..	..	..	..	1	..	..	2	1	3	4	11		
	Green badly shaped Sal	..	..	..	..	..	1	3	..	2	1	7		
	Dry Sal ..	..	..	..	..	1	1	1	1	..	1	5		
	Dry Sal, top broken ..	..	..	..	..	3	..	..	..	..	..	3		
	Green standing Sal, with knots.	..	..	..	..	..	1	..	..	..	..	1		
	Dry uprooted Sal ..	..	..	..	..	..	1	..	1	..	..	2		
	Green Malagiri ..	..	..	..	..	..	..	..	..	..	3	3	7 (Kukat) ..	
	Dry Malagiri ..	..	..	..	..	..	..	1	..	..	..	1		
	Green Toon ..	..	..	..	..	..	..	..	..	1	1	2		
	Green Lali ..	..	..	..	..	..	..	..	..	1	..	1		

R/7	Green standing Sal ..	..	..	8	24	19	28	43	21	20	29	192				
	Green standing Sal, knotty.	..	..	..	1	2	1	..	..	..	2	6				
	Green Sal, forked ..	..	..	..	..	..	1	..	..	1	2	4				
	Green Sal, top broken ..	..	..	..	..	..	1	1	..	..	..	2	218 (Sal)	..		
	Dry Sal ..	..	..	..	..	1	..	..	..	1	..	2				
	Dry Sal, uprooted ..	..	..	..	1	1	3	..	..	..	..	5				
	Dry badly shaped Sal ..	..	..	..	1	..	..	1	..	..	4	6				Nimati Compartment I, Section II.
	Dry partly hollow Sal .	..	..	..	..	..	..	..	..	..	1	1				
	Green Chickrassia ..	..	..	..	..	..	..	..	..	..	1	1	2 (Kukat)	..		
	Green Lali .	..	..	..	..	..	..	..	..	..	1	1				
R/8	Green standing Sal ..	..	..	2	16	17	26	30	31	24	46	192				
	Dry standing Sal ..	..	..	1	1	1	1	..	..	2	..	6				
	Dry Sal, top dead ..	..	..	..	..	..	..	..	2	..	..	2	201(Sal)	..		
	Dry Sal, uprooted ..	..	..	..	..	..	1	..	..	..	..	1				
	Green Malagiri ..	..	..	..	..	..	..	..	..	2	4	6				Nimati Compartment I, Section III.
	Green Toon ..	..	..	..	..	..	..	4	..	..	1	5				
	Green Lali ..	..	..	..	..	..	..	1	..	..	3	4	18 (Kukat)	..		
	Green Gokul Dhup ..	..	..	..	..	..	..	1	..	..	1	2				
	Green Raktan ..	..	..	..	..	..	..	..	1	..	..	1				
R/9	Green standing Sal ..	1	17	24	28	17	31	19	16	12	16	181				
	Green Sal, badly shaped	..	2	4	7	5	6	6	8	9	18	65				
	Green Sal, partly hollow	..	..	..	..	..	1	..	2	1	3	7	267 (Sal)	..		Poro Compartment 7, Section I.
	Dry standing Sal ..	..	1	2	1	3	2	..	1	1	2	13				
	Dry fallen Sal ..	..	..	1	..	..	..	..	..	..	..	1				
R/10	Green standing Sal ..	7	43	39	59	53	62	34	27	18	25	367				
	Green badly shaped Sal	..	..	1	..	1	..	2	3	1	3	11				
	Green Sal, partly hollow	..	..	..	..	..	..	..	1	1	11	13	394 (Sal)	..		
	Dry standing Sal ..	..	..	..	..	..	1	..	1	..	..	2				
	Dry fallen Sal ..	..	..	1	..	..	..	..	..	..	..	1				Poro Compartment 7, Section II.
	Jaman	..	..	..	..	..	..	..	..	1	..	1	2(Kukat)	..		
	Lator	..	..	..	..	..	..	..	..	1	..	1				
R/11	Green standing Sal ..	12	57	83	44	40	31	30	17	18	10	342				
	Green badly shaped Sal	..	4	9	9	4	6	5	10	1	6	54				
	Green Sal, partly hollow	..	..	1	1	2	3	2	5	6	4	24	439 (Sal)	..		
	Dry standing Sal ..	..	3	..	1	1	3	1	..	1	..	10				
	Dry fallen Sal ..	..	..	..	4	..	4	1	..	..	..	9				Poro Compartment 7, Section III.
	Pakasaj	..	..	..	1	3	..	..	..	..	..	4				
	Tita Champ ..	..	..	..	..	..	..	1	1	..	..	2	8 (Kukat)	..		
	Jaman	..	..	..	..	..	..	..	1	1	..	2				
R/12	Green standing Sal ..	..	5	32	18	47	58	48	61	31	40	340				
	Green badly shaped Sal	..	..	..	..	1	2	..	..	..	5	8				
	Green Sal, partly hollow	..	..	..	..	1	2	1	2	1	..	7	414 (Sal)	..		Poro Compartment 9, Section I.
	Dry standing Sal ..	..	1	6	3	7	6	4	2	3	5	37				
	Dry fallen Sal ..	..	..	3	4	7	6	1	1	..	..	22				

*Sold on the 23rd May 1936.

Lot No.	Species.	Under 2'.	2'0" to 2'5."	2'6" to 2'11."	3'0" to 3'5."	3'6" to 3'11."	4'0" to 4'5."	4'6" to 4'11."	5'0" to 5'5."	5'6" to 5'11."	6'0" and over.	Total.	Total number of trees in the lot.	Locality.
R/34	Green standing Sal ..	..	3	13	22	26	34	35	30	20	46	229		
	Green Sal, badly shaped	..	..	..	2	..	..	5	3	1	5	16		
	Green Sal, partly hollow	..	..	..	..	..	1	..	..	..	..	1	258 (Sal) ..	
	Dry Sal, standing ..	..	..	..	..	1	3	1	3	1	1	10		
	Dry fallen Sal ..	..	..	..	..	..	1	..	..	..	..	1		
	Dry fallen Sal, partly hollow.	..	..	1	..	..	..	..	..	..	..	1		Poro Compartment 7, Section II.
	Chickrassia ..	..	..	..	..	..	..	..	..	1	..	1	1 (Kukat) ..	
R/35	Green standing Sal ..	..	41	51	62	65	81	45	44	31	38	458		
	Green Sal, badly shaped	..	1	3	3	5	..	2	4	..	8	26		
	Green Sal, partly hollow	..	..	..	..	..	1	..	..	..	2	3	506 (Sal) ..	Poro Compartment 7, Section II.
	Dry standing Sal ..	..	1	4	6	2	1	..	1	..	1	16		
	Dry fallen Sal ..	..	..	..	1	..	1	..	1	..	..	3		
R/36	Green standing Sal ..	..	45	86	102	65	69	52	54	16	29	518		
	Green Sal, badly shaped	..	..	..	3	..	1	1	1	2	..	8		
	Green Sal, partly hollow	..	..	1	..	..	1	..	..	1	5	8	551 (Sal) ..	
	Dry standing Sal ..	..	..	1	3	..	1	2	..	3	4	14		
	Dry Sal, fallen ..	..	..	1	1	..	1	..	..	..	..	3		Poro Compartment 7, Section III.
	Toon	..	..	..	..	..	..	..	..	..	1	2		
	Chickrassia ..	..	..	..	..	..	..	..	1	..	1	1	3 (Kukat) ..	

Clear Felling Lots of 1936-37.

Panbari Range.

P/1	Green standing Sal ..	26	31	25	32	34	22	14	22	9	13	228		
	Green badly shaped Sal	15	7	11	10	8	2	5	2	..	..	60	293 (Sal) ..	
	Dry standing Sal ..	..	1	1	..	..	..	..	..	..	..	2		
	Dry badly shaped Sal ..	..	1	..	1	1	..	..	..	..	..	3		Damanpur Compartment 8, Section I.
	Kadam	..	..	..	..	..	..	..	..	1	1	2	3 (Kukat) ..	
	Malagiri	..	..	..	..	..	..	..	..	..	1	1		
P/2	Green standing Sal ..	6	8	8	8	19	19	26	24	19	22	159		
	Green badly shaped Sal	2	3	3	3	3	4	3	1	2	1	25	186 (Sal) ..	
	Dry standing Sal ..	..	..	..	..	..	1	1	..	..	..	2		Damanpur Compartment 8, Section II.
	Malagiri	..	..	..	..	..	..	..	1	1	..	2	2 (Kukat) ..	
P/3	Green Sal	2	4	2	4	7	7	14	12	6	24	82		
	Green badly shaped Sal	..	..	2	1	2	2	..	..	1	2	10	93 (Sal) ..	
	Dry uprooted Sal ..	..	..	..	..	..	1	..	..	..	..	1		
	Sal top	..	..	..	1	..	..	..	..	..	..	1	1 (Sal top) ..	Damanpur Compartment 8, Section III.
	Pitali	..	..	..	..	..	..	..	..	..	1	1		
	Chilsuni	..	..	..	..	..	..	..	..	..	1	1	5 (Kukat) ..	
	Malagiri	..	..	..	..	..	..	1	1	1	..	3		

P/4	Green standing Sal ..	..	1	2	4	9	10	20	24	18	19	107	137 (Sal) ..	Damanpur Compartment 8, Section 4.
	Green badly shaped Sal	..	..	2	1	5	2	2	6	4	2	24		
	Dry Sal	..	..	..	..	..	..	1	1	1	..	3		
	Dry badly shaped Sal ..	..	..	..	1	..	..	..	1	..	..	2		
	Dry uprooted badly shaped Sal.	..	..	..	..	..	..	1	..	..	..	1		
						No. C. ft.	No. C. ft.	No. C. ft	No. C. ft.			No. C. ft.	No. C. ft.	
	Dressed Sal logs ..	..	.	..	..	1 19·1	1 9·8	2 49·2	1 22·0	..	..	5 100·1	5 100·1 (log)	
	Malagri	..	.	..	..	.	1	..	.	1	..	2	3 (Kukat) ..	
	Kadam . ..	..	..	.	..	..	..	..	..	..	1	1		
P/5	Green standing Sal ..	1	4	4	9	12	5	4	1	3	9	52	58 (Sal) ..	Gadadhar Compartment 4, Section I.
	Green badly shaped Sal	..	1		..	..	..	..	..	..	1	2		
	Dry Sal	..	.	.	1	..	1	1	..	..		3		
	Dry uprooted Sal ..	..	..	..	..	.	..	..	..	1	..	1		
P/6	Green standing Sal ..	1	2	5	5	3	17	16	27	24	53	153	168 (Sal) ..	Panbari Compartment 5, Section I.
	Green badly shaped Sal	..	..	..	..	.	..	..	..	..	3	3		
	Dry standing Sal ..	..	..	.	1	..	1	1	1	.	3	7		
	Dry uprooted Sal ..	..	..	..	..	.	2	..	..	2	1	5		
	Lali	..	..	..	..	.	..	..	..	..	1	1	3(Kukat) ..	
	Toon	..	..	.	..	..	..	..	..	..	1	1		
	Chickrassia ..	..	..	..	..	..	..	..	..	..	1	1		
P/7	Green standing Sal ..	1	3	8	16	15	28	18	20	10	10	129	186 (Sal) ..	Cheko Compartment 8, Section 1.
	Green badly shaped Sal	..	1	2	4	10	7	4	6	5	2	41		
	Dry standing Sal ..	..	..	1	2	4	1	..	..	..	..	8		
	Dry badly shaped Sal ..	..	..	1	4	.	..	1	..	..	..	6		
	Dry uprooted Sal ..	..	..	..	..	1	..	..	1	..	..	2		
	Kainjal	..	..			.	..	..	..	1	..	1		
	Lali	.	.	..	.	..	..	1	..	1	..	2	4 (Kukat) ..	
	Chickrassia ..	..	..	.	.	..	..	..	..	.	1	1		
P/8	Green standing Sal ..	7	16	11	18	24	25	16	7	4	14	142	192 (Sal) ..	Cheko Compartment 8, Section 2.
	Green badly shaped Sal	1	4	2	8	7	3	3	4	4	5	41		
	Dry standing Sal ..	..	..	..	..	3	1	..	..	1	..	5		
	Dry badly shaped Sal ..	..	..	..	1	..	..	..	..	..	..	1		
	Dry uprooted Sal ..	..	1	.	1	1	..	..	..	..	..	3		
	Jaman	..	.				1	..	..	..	.	1	2 (Kukat) ..	
	Kainjal	.	.			.	.	1	.	..	..	1		
P/9	Gree standing Sal ..	3	14	18	13	13	11	6	7	..	7	92	111 (Sal) ..	Cheko Compartment 8. Section 3.
	Green badly shaped Sal	1	..	2	2	4	..	1	4	1	2	17		
	Dry badly shaped Sal ..	..	..		.	..	..	1	..	..	..	1		
	Dry uprooted Sal ..	..		.	1	.		..	..	..	..	1		
	Kadam ..	..	.		..		.	.	..	1	..	1	1 (Kukat) ..	

Clear Felling Lots of 1936-37.

Chilapata Range.

C/1	Green Sal ..	..	..	11	22	27	15	31	29	19	26	180	192 (Sal) ..	Salkumar Compartment 3, Section I.
	Green badly shaped Sal	..	..	..	2	..	3	1	2	..	3	11		
	Dry uprooted Sal ..	..	..	..	..	..	..	1	..	..	..	1		
	Kainjal	..	..	..	..	..	..	4	3	1	..	8	8 (Kukat) ..	

Lot No.	Species.	Under 2′.	2′0″ to 2′5.″	2′6″ to 2′11.″	3′0″ to 3′5.″	3′6″ to 3′11.″	4′0″ to 4′5.″	4′6″ to 4′11.″	5′0″ to 5′5.″	5′6″ to 5′11.″	6′0″ and over.	Total.	Total number of trees in the lot.	Locality.
C/2	Green Sal	..	.	33	25	43	35	44	20	21	13	234	246 (Sal) ..	Salkumar Compartment 3, Section II.
	Green badly shaped Sal ..	..	..	1	2	2	3	1	..	..	..	9		
	Dry standing Sal ..	..	..	1	..	1	..	..	..	..	..	2		
	Dry uprooted Sal ..	..	..	..	..	..	..	..	1	..	..	1		
C/3	Green standing Sal ..	..	8	21	28	39	43	38	27	28	21	253	287 (Sal) ..	Bania Compartment 6, Section I.
	Dry standing Sal ..	..	1	..	2	..	1	..	..	..	..	4		
	Green standing badly shaped and defective Sal	..	1	3	9	3	3	3	3	..	3	28		
	Dry fallen Sal ..	..	..	..	..	.	1	..	..	..	..	1		
	Dry uprooted Sal ..	..	..	..	..	..	..	1	..	..	..	1		
C/4	Green standing Sal ..	..	6	24	34	44	49	46	23	26	23	275	300 (Sal) ..	Bania Compartment 6, Section II.
	Dry uprooted Sal ..	..	..	..	..	..	1	..	..	..	..	1		
	Green standing badly shaped and defective Sal.	..	..	1	9	6	3	2	1	1	1	24		
C/5	Green standing Sal ..	..	11	40	55	66	44	50	18	18	12	314	359 (Sal) ..	Bania Compartment 6, Section III.
	Dry standing Sal ..	..	..	..	2	..	1	1	..	..	..	4		
	Green standing badly shaped and defective Sal.	..	1	7	9	10	3	3	3	..	2	38		
	Dry badly shaped Sal ..	..	..	1	..	..	..	..	..	..	..	1		
	Dry uprooted Sal ..	..	..	..	1	1	..	..	..	..	..	2		
C/6	Green standing Sal ..	..	5	19	30	33	42	29	22	14	9	203	229 (Sal) ..	Bania Compartment 6, Section 4.
	Dry standing Sal ..	..	..	1	1	1	..	..	..	..	..	3		
	Green badly shaped and defective Sal.	..	..	1	7	2	2	3	3	2	2	22		
	Dry uprooted Sal ..	..	..	..	..	..	1	..	..	..	..	1		
C/7	Green standing Sal ..	..	5	18	29	31	30	28	32	18	37	228	249 (Sal) ..	Bania Compartment 5, Section I.
	Dry standing Sal ..	..	1	..	1	4	1	..	..	1	1	9		
	Green badly shaped and defective Sal.	..	..	6	2	1	..	..	1	..	..	10		
	Dry uprooted Sal ..	..	..	..	..	..	1	..	..	..	..	1		
	Dry badly shaped and defective Sal.	..	..	..	1	.	..	..	..	..	..	1		
C/8	Green standing Sal ..	..	11	15	14	23	29	35	36	22	33	218	267 (Sal) ..	Mendabari Compartment 4, Section I.
	Dry standing Sal ..	..	2	3	6	..	4	2	..	2	1	20		
	Dry fallen Sal ..	..	1	1	..	1	3	2	2	..	..	10		
	Green badly shaped and defective Sal.	..	1	5	1	4	3	2	2	1	..	19		
	Green Chickrassia ..	..	..	..	..	..	..	..	..	..	1	1	4 (Kukat) ..	
	Green Chilauni ..	..	..	..	..	..	..	..	..	..	1	1		
	Green Lali ..	..	..	..	..	..	..	..	..	..	1	1		
	Green Toon ..	..	..	..	..	..	1	..	..	..	..	1		

C/9	Green standing Sal ..	..	4	43	47	63	36	47	30	38	31	339	371 (Sal) ..	Mendabari Compartment I, Section I.
	Dry standing Sal ..	..	1	4	2	2	1	2	1	2	..	15		
	Dry fallen Sal ..	..	..	..	..	1	..	..	1	..	..	2		
	Green badly shaped and defective Sal.	..	1	3	2	2	4	1	1	1	..	15		
C/10	Green standing Sal ..	..	6	25	22	31	30	29	10	21	17	191	208 (Sal) ..	Mendabari Compartment I, Section II.
	Dry standing Sal ..	..	.	..	4	1	2	..	1	1	..	9		
	Dry fallen Sal ..	..	..	1	1	1	..	..	..	..	..	3		
	Green badly shaped and defective Sal.	..	1	..	1	2	..	1	..	..	..	5		
	Champ ..	.	..	..	..	..	..	1	..	1	..	2	3 (Kukat) ..	
	Chilauni ..	..	..	..	..	..	..	..	..	..	1	1		
C/11	Green standing Sal ..	..	9	13	12	23	24	23	21	23	30	178	192 (Sal) ..	Borodabri Compartment 4, Section I.
	Dry standing Sal ..	..	1	1	3	1	..	2	..	..	..	8		
	Dry uprooted Sal ..	..	..	1	1	2	1	..	..	..	..	5		
	Green badly shaped and defective Sal.	..	..	1	..	..	..	..	..	..	..	1		
C/12	Green standing Sal ..	..	23	34	59	67	86	36	33	29	15	382	412 (Sal) ..	Borodabri Compartment 6, Section I.
	Dry standing Sal ..	..	4	8	4	4	4	2	..	..	..	26		
	Dry uprooted Sal ..	..	..	..	..	1	..	..	1	..	..	2		
	Green uprooted Sal ..	..	..	..	1	..	..	1	..	..	..	2		
	Green Toon ..	..	..	..	..	..	..	..	..	..	1	1	1 (Kukat) ..	
C/13	Green standing Sal ..	..	19	29	29	43	60	66	40	25	22	333	354 (Sal) ..	Borodabri Compartment 6, Section II.
	Green uprooted Sal ..	..	..	.	1	..	..	..	..	..	..	1		
	Dry standing Sal ..	..	2	4	2	2	4	1	..	1	..	16		
	Dry uprooted Sal ..	..	..	3	..	1	..	..	..	..	..	4		
C/14	Green standing Sal ..	..	16	21	32	46	47	35	38	24	23	282	298 (Sal) ..	Borodabri Compartment 6, Section III.
	Dry standing Sal ..	..	2	..	5	2	2	1	1	1	..	14		
	Dry fallen Sal ..	..	..	1	..	..	..	..	..	..	..	1		
	Dry uprooted Sal ..	..	..	..	1	..	..	..	..	..	..	1		
	Chickrassia ..	..	..	..	..	..	..	..	..	..	1	1	2 (Kukat) ..	
	Malagiri ..	..	..	..	..	..	..	..	..	..	1	1		
C/15	Green standing Sal ..	..	2	19	20	27	26	28	23	18	25	188	200 (Sal) ..	Borodabri Compartment 6, Section 4.
	Dry standing Sal ..	..	2	4	1	..	1	..	1	..	2	11		
	Dry fallen Sal ..	..	..	..	..	1	..	..	..	..	..	1		

Clear Felling Lots of 1936-37.

Nilpara Range.

N/1	Green standing Simul ..	..	..	..	..	..	..	..	..	..	..	38	38	91 (Kukat) ..	Godamdabri Compartment 2.
	Green standing Toon ..	..	..	..	..	..	4	6	7	2	6	25		
	Green standing Siris ..	..	..	..	..	..	..	..	1	..	6	7		
	Green standing Kadam ..	..	..	..	..	..	..	3	1	3	9	16		
	Green standing Dabdabi ..	..	..	..	..	..	..	1	..	..	1	2		
	Green standing Chickrassia ..	..	..	..	..	..	..	1	..	..	..	1		
	Green standing Maina ..	..	..	..	..	..	..	..	..	..	1	1		
	Green standing Pitali ..	..	..	..	..	..	..	..	..	..	1	1		

Lot No.	Species.	Under 2′.	2′0″ to 2′5.″	2′6″ to 2′11.″	3′0″ to 3′5.″	3′6″ to 3′11.″	4′0″ to 4′5.″	4′6″ to 4′11.	5′0″ to 5′5.″	5′6″ to 5′11.″	6′0″ and over.	Total.	Total number of trees in the lot.	Locality.
	Clear Felling Lots of 1936-37.													
	Rydak Range.													
RD/1	Green standing Sal	..	..	..	..	3	6	8	9	16	33	75		
	Green badly shaped Sal	..	..	..	1	..	..	..	..	..	1	2	86 (Sal) ..	
	Dry standing Sal ..	..	..	1	1	..	..	..	..	2	1	5		
	Dry fallen Sal ..	..	..	..	..	1	1	2	..	..	..	4		South Rydak Compartment 7, Chipra.
	Sal top	..	..	..	..	1	2	..	..	..	1	4	4 (Sal top)	
	Undressed Sal logs ..	..	..	..	..	1	1	..	..	1	..	3	3 (Sal logs)	
	Green standing Lali ..	..	..	..	..	..	1	..	1	..	..	2	2 (Kukat) ..	
RD/2	Green standing Sal ..	..	1	5	3	11	19	20	32	16	45	152		
	Dry Sal, standing ..	..	1	1	1	3	..	1	1	..	1	9		
	Dry fallen Sal ..	..	..	..	2	..	..	..	..	..	..	2		
	Green standing badly shaped and defective Sal.	..	..	1	..	3	..	2	..	5	4	15	181 (Sal) ..	
	Dry standing badly shaped and defective Sal.	..	..	1	1	..	..	1	..	..	..	3		South Rydak Compartment 1.
	Green standing Lathar	..	..	..	..	..	..	..	..	..	1	1	1 (Kukat) ..	
	Green and Dry Sal and other trees (Selection Coupes of 1936-37).													
	Bholka Range.													
B/1	Green standing Sal ..	..	..	..	..	..	2	2	..	2	88	94		
	Dry standing Sal ..	..	1	4	13	10	13	7	7	4	6	65		
	Dry fallen Sal ..	..	..	1	3	3	4	6	5	1	1	24		
	Green badly shaped and defective Sal.	..	..	..	..	..	..	..	1	..	3	4	188 (Sal) ..	
	Dry badly shaped and defective Sal.	..	..	..	..	..	..	..	..	..	1	1		Newland Compartment I.
	Green standing Champ	..	..	..	..	..	..	..	..	..	1	1	(1 Champ) ..	
B/2	Green standing Sal ..	..	..	..	6	20	23	16	7	3	123	198		
	Dry standing Sal ..	..	2	27	39	40	37	32	14	15	7	213		
	Dry fallen Sal ..	..	..	..	4	3	4	4	4	2	2	23		
	Green badly shaped and defective Sal.	..	..	..	..	..	..	1	1	..	3	5	442 (Sal) ..	
	Dry badly shaped and defective Sal	..	..	..	..	..	1	1	..	..	1	3		North Bholka Compartment II.
	Toon	..	..	..	..	..	..	..	..	..	1	1	3 (Kukat) ..	
	Chickrassia ..	..	..	..	..	..	..	..	..	..	2	2		

Dry Felling Lots of 1936-37.

Rajabhatkhawa Range.

R/13	Dry standing Sal	..	..	..	41	84	81	60	34	20	14	10	344	*438 (Sal) ..	North Rajabhatkhawa Compartment Section I.
	Dry fallen Sal	..	..	..	3	3	7	5	8	1	5	..	32		
	Dry Sal, top broken	..	..	..	3	6	10	12	4	4	3	4	46		
	Dry badly shaped Sal	..	..	..	7	5	3	..	..	1	..	..	16		
R/14	Dry standing Sal	..	..	..	53	106	90	83	62	25	18	20	457	*563 (Sal) ..	North Rajabhatkhawa Compartment 6, Section II.
	Dry fallen Sal	..	..	..	2	6	7	8	11	12	6	1	53		
	Dry Sal, top broken	..	..	..	5	8	5	10	10	8	2	..	48		
	Dry badly shaped Sal	..	..	..	..	2	2	1	..	..	..	..	5		
R/15	Dry standing Sal	..	..	..	36	76	54	50	35	26	16	12	305	*399 (Sal including 1 Undressed piece.)	North Rajabhatkhawa Compartment 6, Section III.
	Dry fallen Sal	..	..	..	2	5	8	16	6	9	7	..	53		
	Dry top broken Sal	..	..	..	2	8	8	10	5	1	1	1	36		
	Dry badly shaped Sal	..	..	..	1	..	1	2	..	..	..	..	4		
	Undressed piece	..	..	..	..	..	..	1 (12'8" × 4'1").	..	..	..	..	1		
R/16	Dry standing Sal	..	..	..	34	71	65	66	46	31	19	16	348	*432 (Sal) ..	North Rajabhatkhawa Compartment 6, Section IV.
	Dry fallen Sal	..	..	..	3	4	7	7	6	10	4	3	44		
	Dry top broken Sal	..	..	..	4	4	7	8	5	2	1	4	35		
	Dry badly shaped Sal	..	..	..	1	..	3	1	..	..	..	..	5		
R/17	Dry standing Sal	..	..	..	7	16	17	17	6	9	3	3	78	*112 (Sal) ..	North Rajabhatkhawa Compartment 6, Section V.
	Dry fallen Sal	..	..	..	1	2	..	3	6	1	1	..	14		
	Dry Sal, top broken	..	..	..	3	2	5	4	1	2	..	2	19		
	Dry badly shaped Sal	..	..	..	..	..	..	..	1	..	..	..	1		
R/18	Dry standing Sal	..	..	..	22	30	45	22	26	23	19	20	207	276 (Sal) ..	North Rajabhatkhawa Compartment 13, Section I.
	Dry fallen Sal	..	..	..	4	7	5	7	9	6	6	4	48		
	Dry top broken Sal	..	..	..	1	4	2	7	1	2	2	1	20		
	Dry badly shaped Sal	..	..	..	..	..	..	1	..	..	..	..	1		
R/19	Dry standing Sal	..	..	..	20	40	49	25	42	28	16	12	232	323 (Sal) ..	North Rajabhatkhawa Compartment 13, Section II.
	Dry fallen Sal	..	..	..	3	6	10	12	5	5	6	3	50		
	Dry top broken Sal	..	..	..	1	5	4	7	13	3	2	5	40		
	Dry badly shaped Sal	..	..	..	..	..	..	1	..	..	..	..	1		
R/20	Dry standing Sal	..	..	..	11	27	23	25	25	27	15	20	173	280 (Sal) ..	North Rajabhatkhawa Compartment 13, Section III.
	Dry fallen Sal	..	..	..	..	4	10	11	13	12	6	10	66		
	Dry top broken Sal	..	..	..	..	9	6	5	5	3	5	2	35		
	Dry badly shaped Sal	..	..	..	1	1	2	..	..	2	..	..	6		
R/21	Dry standing Sal	..	..	..	25	23	25	21	17	10	8	7	136	206 (Sal) ..	North Rajabhatkhawa Compartment 13, Section IV.
	Dry fallen Sal	..	..	..	1	4	3	6	7	8	7	2	38		
	Dry top broken Sal	..	..	..	2	5	2	6	4	3	2	1	25		
	Dry badly shaped Sal	..	..	..	2	5	..	..	..	..	..	..	7		

*Sold on the 23rd May 1936.

Lot No.	Species.	Under 2'.	2'0" to 2'5."	2'6" to 2'11."	3'0" to 3'5."	3'6" to 3'11."	4'0" to 4'5."	4'6" to 4'11."	5'0" to 5'5."	5'6" to 5'11."	6'0" and over.	Total.	Total number of trees in the lot.	Locality.
R/22	Dry standing Sal ..	..	..	13	17	26	25	19	19	6	13	138	179 (Sal including 2 pieces).	North Rajabhatkhawa Compartment 5, Section I.
	Dry fallen Sal ..	..	..	..	..	1	1	1	..	..	3	6		
	Dry top broken Sal ..	..	..	2	4	6	5	3	5	3	3	31		
	Dry badly shaped Sal ..	..	..	1	1	..	..	..	..	..	..	2		
	Dressed logs ..	..	1(37'9" ×2").	..	1(16' ×3'5")	..	..	..	..	..	..	2		
R/23	Dry standing Sal ..	..	..	18	37	42	41	43	38	26	36	281	515 (Sal including 1 piece).	South Rajabhatkhawa Compartment 5, Section I.
	Dry fallen Sal ..	..	..	20	24	27	35	41	27	15	6	195		
	Dry top broken Sal ..	..	..	1	6	3	5	6	2	4	4	31		
	Dry badly shaped Sal ..	..	..	1	..	2	1	1	2	..	..	7		
	Dressed log ..	..	..	1(2'9" ×15').	..	..	..	..	..	..	..	1		
R/24	Dry standing Sal ..	..	..	40	40	53	45	49	40	42	32	341	693 (Sal) ..	South Rajabhatkhawa Compartment 5, Section II.
	Dry fallen Sal ..	..	..	25	29	51	69	50	37	24	4	289		
	Dry top broken Sal ..	..	..	3	2	4	3	6	15	7	10	50		
	Dry badly shaped Sal ..	..	..	2	4	2	2	2	1	..	..	13		
R/25	Dry standing Sal ..	..	..	3	8	22	18	34	13	13	29	140	196(Sal) ..	North Rajabhatkhawa Compartment 12, Section I.
	Dry top broken Sal ..	..	..	..	..	2	4	3	3	1	..	13		
	Dry fallen Sal ..	..	..	1	7	2	6	7	7	7	2	39		
	Dry badly shaped Sal ..	..	..	1	..	..	..	1	..	1	1	4		
R/26	Dry standing Sal ..	..	..	31	32	39	37	37	29	23	19	247	392 (Sal including logs and tops).	Nimati Compartment I, Section I.
	Dry uprooted Sal ..	..	..	..	9	7	5	4	4	..	5	34		
	Dry fallen Sal ..	..	..	3	2	..	..	1	1	2	..	9		
	Dry top broken Sal ..	..	..	1	3	9	9	8	1	2	5	38		
	Dressed log ..	..	..	No. C. ft. 2 15·2	No. C. ft. 1 15·8	..	..	..	..	..	..	No. C. ft 3 31·0		
	Dry standing forked Sal	..	..	..	1	..	1	4	..	..	5	11		
	Dry Sal, tops forked ..	..	..	..	..	2	..	..	..	..	..	2		
	Dry Sal, top dead ..	..	..	2	7	6	7	8	7	5	4	46		
	Dry Sal, partly hollow	..	..	..	..	..	..	..	..	..	1	1		
	Dry Sal, branchy ..	..	..	..	..	..	..	..	..	..	1	1		
R/27	Dry standing Sal ..	..	..	..	24	22	25	18	25	16	7	137	211 (Sal) ..	South Rajabhatkhawa Compartment 12, Section I.
	Dry fallen Sal ..	..	..	..	8	11	20	11	11	8	1	70		
	Dry badly shaped Sal ..	..	..	..	1	1	..	1	..	1	..	4		
R/28	Dry standing Sal ..	..	..	20	45	50	59	62	53	31	40	360	428 (Sal) ..	South Rajabhatkhawa Compartment 12, Section II.
	Dry fallen Sal ..	..	..	1	11	11	18	11	5	6	3	66		
	Dry badly shaped Sal ..	..	..	..	1	..	..	..	..	..	1	2		

R/29	Dry standing Sal ..	..	..	36	65	63	67	55	47	47	44	424	591 (Sal)	..	South Rajabhatkhawa Compartment 12, Section III.
	Dry fallen Sal ..	..	..	3	13	20	35	18	23	10	3	125			
	Dry badly shaped Sal ..	..	..	..	1	1	..	..	..	..	..	2			
	Dry top broken Sal ..	..	..	1	4	10	4	6	8	5	2	40			
R/30	Dry standing Sal ..	..	..	12	63	52	58	17	24	10	7	243	352 (Sal)	..	Poro Compartment 9, Section I.
	Dry fallen Sal ..	..	..	6	34	27	11	5	9	2	..	94			
	Dry badly shaped Sal ..	..	..	..	4	3	2	1	2	2	1	15			
R/31	Dry standing Sal ..	..	..	5	10	8	11	6	1	2	1	44	48 (Sal)	..	Poro Compatrment 10, Section II.
	Dry fallen Sal ..	..	..	..	..	1	1	..	..	..	..	2			
	Dry badly shaped Sal ..	..	..	..	..	..	2	..	..	..	..	2			
R/32	Dry standing Sal ..	..	..	16	37	40	49	20	24	19	8	213	234 (Sal)	..	Poro Compartment 6, Section III.
	Dry fallen Sal ..	..	..	1	..	6	5	1	2	1	2	18			
	Dry badly shaped Sal ..	..	..	1	..	2	..	..	..	..	..	3			
R/33	Dry standing Sal ..	..	..	..	3	..	1	1	2	3	4	14	17 (Sal)	..	North Rajabhatkhawa Compartment 16, Section I.
	Dry fallen Sal ..	..	..	..	..	..	2	..	..	1	..	3			

Dry Felling Lots of 1936-37.

Panbari Range.

P/10	Dry Sal ..	..	..	6	42	26	43	39	17	23	25	221	281 (Sal)	..	Cheko Compartment 5, Section I.
	Dry Sal, badly shaped ..	..	..	..	11	10	13	2	4	3	1	44			
	Dry Sal, uprooted ..	..	..	.	2	1	3	2	2	2	3	15			
	Dry uprooted badly shaped Sal.	.	..	..	..	..	..	1	..	..	..	1			
P/11	Dry Sal ..	..	..	13	40	37	28	18	12	14	9	171	252 (Sal)	..	Cheko Compartment 5, Section II.
	Dry Sal, badly shaped ..	..	..	2	15	11	12	3	4	3	2	52			
	Dry uprooted Sal ..	..	..	1	3	4	6	1	3	1	2	21			
	Dry uprooted badly shaped Sal.	..	..	1	1	1	1	..	4	..	..	8			
P/12	Dry Sal ..	.	..	11	25	29	24	27	24	17	14	171	231 (Sal)	..	Cheko Compartment 5, Section III.
	Dry Sal, badly shaped ..	..	..	3	2	3	1	4	2	1	2	18			
	Dry uprooted Sal ..	..	..	1	10	9	5	..	6	2	2	35			
	Dry uprooted badly shaped Sal.	..	..	..	3	..	..	..	1	..	3	7			
P/13	Dry Sal ..	..	..	12	29	22	34	34	34	24	44	233	345 (Sal)	..	Cheko Compartment I, Section I.
	Dry Sal, badly shaped ..	..	..	5	14	10	6	..	10	2	3	50			
	Dry uprooted Sal ..	..	..	6	10	8	14	12	8	1	..	61			
	Dry uprooted badly shaped Sal.	..	..	..	..	..	1	..	..	..	..	1			
P/14	Dry Sal ..	..	..	10	30	35	54	40	36	32	21	258	430 (Sal)	..	Cheko Compartment 2, Section I.
	Dry Sal, badly shaped ..	..	..	6	10	11	8	8	8	3	2	56			
	Dry uprooted Sal ..	..	..	4	6	14	25	12	15	8	4	88			
	Dry uprooted badly shaped Sal.	..	..	4	2	5	7	2	4	1	3	28			

Lot No.	Species.	Under 2′.	2′0″ to 2′5.″	2′6″ to 2′11.″	3′0″ to 3′5.″	3′6″ to 3′11.″	4′0″ to 4′5.″	4′6″ to 4′11.″	5′0″ to 5′5.″	5′6″ to 5′11½″	6′0″ and over.	Total.	Total number of trees in the lot.	Locality.
P/15	Dry Sal ..	..	..	14	33	40	36	52	29	21	30	255	456 (Sal) ..	Jainti Compartment 9, Section I.
	Dry uprooted Sal ..		..	16	30	37	34	50	18	14	2	201		
P/16	Dry Sal ..	..	..	10	25	35	44	40	26	30	25	235	329 (Sal) ..	Jainti Compartment 9, Sections I and II.
	Dry uprooted Sal ..	..	..	4	14	15	15	22	7	10	7	94		
P/17	Dry Sal ..	..	..	9	37	43	38	36	23	16	6	208	250 (Sal) ..	Jainti Compartment 9, Sections III, IV and V.
	Dry uprooted Sal ..	..	..	1	11	10	11	5	4	..	..	42		
P/18	Dry Sal ..	..	..	..	11	39	55	47	35	28	6	221	354 (Sal) ..	Jainti Compartment 9, Sections VI and VII.
	Dry uprooted Sal ..	..	..	..	36	26	27	15	14	12	3	133		
P/19	Dry Sal ..	..	..	3	11	18	20	18	17	17	14	118	145 (Sal) ..	Panbari Compartment 5, Section I.
	Dry uprooted Sal ..	..	..	..	..	2	2	3	6	7	7	27		
P/20	Dry Sal ..	..	..	12	25	41	29	35	23	16	19	200	568 (Sal) ..	Panbari Compartment 6, Section II.
	Dry badly shaped Sal ..	..	..	..	2	..	1	..	1	..	..	4		
	Dry uprooted Sal ..	..	..	14	43	61	88	64	46	26	19	361		
	Dry badly shaped Sal ..	..	..	..	..	1	2	..	..	..	..	3		
P/21	Dry Sal ..	..	..	6	22	31	32	35	32	23	23	204	312 (Sal) ..	Panbari Compartment 6, Section I.
	Dry badly shaped Sal ..	..	..	..	..	..	1	1	1	..	1	4		
	Dry uprooted Sal ..	..	..	1	11	14	10	16	13	21	16	102		
	Dry uprooted badly shaped Sal.	..	..	1	1	..	..	..	..	..	..	2		
P/22	Dry Sal ..	..	..	3	17	23	21	24	13	13	16	130	151 (Sal) ..	Panbari Compartment 6, Section III.
	Dry badly shaped Sal ..	..	..	..	..	1	..	..	..	..	..	1		
	Dry uprooted badly shaped Sal.	..	..	1	3	1	3	7	4	..	1	20		

Dry Felling Lots of 1936-37.

Baksa-Duar Range.

BD/1	Dry standing Sal ..	..	3	7	10	8	9	5	2	..	3	47	88 (Sal including 9 tops and 3 dressed logs).	Raimatong Block Compartment 3.
	Dry fallen Sal ..	..	1	4	3	2	1	1	2	2	3	19		
	Dry defective standing Sal.	..	..	..	2	..	..	..	1	..	1	4		
	Dry defective fallen Sal	..	..	..	1	1	1	..	2	..	1	6		
			No. C ft.	No. C.ft.	No. C.ft.	No. C.ft.						No. C.ft.		
	Dry Sal top ..	..	2 13·7	3 35·7	3 38·8	1 34·9	..	..	..	..	..	9 123·1		
	Dressed log ..	..		2 34·0	1 15·4	..	..	..	..	..	..	3 49·4		

BD/2	Dry standing Sal ..	..	2	3	2	6	1	1	3	2	3	23				
	Dry fallen Sal ..	..	..	..	..	1	..	..	..	..	..	1				
	Dry defective standing Sal	..	..	..	1	..	..	..	..	..	2	3				
	Dry defective fallen Sal	..	..	..	..	..	1	1	..	..	..	2	32 (Sal including 3 logs).			
				No. C.ft.			No. C. ft.	No. C. ft.				No. C. ft.				
	Dressed logs ..	..	..	1 10·0	..	..	1 14·7	1 16·5	..	..	..	3 41·0				
	Dry standing Khair ..	..	3	7	14	10	16	7	3	1	..	61				
	Dry fallen Khair ..	..	3	8	5	9	7	4	7	..	..	43				
	Dry defective standing Khair.	..	1	..	4	5	3	3	3	1	..	20				
	Dry defective fallen Khair.	..	..	..	1	3	6	2	2	1	1	16	168 (Khair including 28 logs.			
		No. C.ft.	No. C.ft.	No. C.ft.	No. C.ft.	No. C.ft.		No. C.ft.				No. C. ft.				
	Dressed Khair logs ..	1 2·3	2 6·7	12 79·4	9 80·3	3 30·7	..	1 27·6	..	..	..	28 227·0				
	Dry standing Sissoo ..	..	..	..	..	1	1	1	1	..	3	7				
	Dry fallen Sissoo ..	..	..	..	..	..	1	1	1	..	1	4	15 (Sissoo)			
	Dry defective fallen Sissoo.	..	..	..	..	2	1	..	1	..	..	4				
BD/3	Dry standing Sal ..	..	..	..	..	..	1	..	..	..	..	1	2 (Sal)			
	Dry fallen Sal ..	..	..	..	..	..	..	1	..	..	..	1				
	Dry standing Sissoo ..	..	..	..	1	..	1	..	..	..	..	2	3 (Sissoo)			
	Dry defective standing Sissoo.	..	..	..	..	..	..	..	..	..	1	1				
	Dry standing Khair ..	1	9	18	28	24	33	14	5	3	1	136				
	Dry fallen Khair ..	1	5	18	10	8	10	3	6	1	..	62				
	Dry defective standing Khair.	..	..	2	4	8	12	8	4	1	4	43	277 (Khair including 11 logs and 4 tops).			
	Dry defective fallen Khair.	..	2	3	6	3	3	2	1	1	..	21				
	Dressed Khair log	..	No. C.ft.	No. C.ft.	No. C.ft.	No. C.ft.	No. C. ft.					No. C.ft.				
			2 7·0	2 8·9	4 31·6	2 12·3	1 16·4	..	..	..	..	11 76·2				
	Dry Khair top ..	..	1 11·7	3 25·1	..	..	..	..	..	..	..	4 36·8				

Dry Felling Lots of 1936-37.

Chilapata Range.

C/16	Dry standing Sal ..	..	1	4	10	10	7	7	4	3	2	48	68 (Sal) ..	Borodabri Compartments I and II, Section I.
	Dry uprooted Sal ..	..	1	..	5	5	5	..	1	..	..	17		
	Dry felled Khair ..	..	1	..	..	..	1	..	..	..	..	2		
	Sal top ..	..	..	..	..	..	..	1	..	..	..	1		
C/17	Dry standing Sal ..	..	..	15	37	20	49	31	28	23	28	231	294 (Sal) ..	Borodabri Compartment IV, Section I.
	Dry fallen Sal ..	..	..	1	3	3	15	14	7	5	9	57		
	Dry badly shaped and defective Sal.	..	..	..	2	..	2	2	..	..	..	6		
C/18	Dry standing Sal ..	..	5	38	43	42	36	47	28	16	27	282	359 (Sal) ..	Mendabari Compartment 5, Section I.
	Dry fallen Sal ..	..	1	6	10	10	5	5	4	3	5	49		
	Dry badly shaped and defective Sal.	..	..	4	5	8	1	5	3	1	1	28		
C/19	Dry standing Sal ..	..	..	..	..	..	..	1	..	..	..	1	4 (Sal) ..	Salkumar Compartment 4, Section I.
	Dry fallen Sal ..	..	..	..	1	..	..	..	..	..	2	3		

Lot No.	Species.	Under 2′.	2′0″ to 2′5″.	2′6″ to 2′11″.	3′0″ to 3′5″.	3′6″ to 3′11.	4′0″ to 4′5″.	4′6″ to 4′11″.	5′0″ to 5′5″.	5′6″ to 5′11″.	6′0″ and over.	Total.	Total number of trees in the lot.	Locality.
Dry Felling Lot of 1936-37.														
Nilpara Range.														
N/2	Dry standing Sal ..	..	..	..	7	9	13	7	9	12	19	76	88 (Sal and dressed Sal logs).	Bhutri Compartments 3 and 5.
	Dry uprooted Sal ..	..	..	..	4	1	..	3	..	3	1	12		
	Dry dressed Sal log ..	..	No. C. ft. 1 4·8	No. C.ft. 3 21·2	No. C.ft. 5 66·2	No. C.ft. 7 90·6	No. C.ft. 6 112·8	No. C.ft. 5 90·5	No. C.ft. 5 94·3	No. C.ft. 4 88·0	No. C.ft. 10 311·7	No. C.ft. 46 880·1		
Dry Felling Lots of 1936-37.														
Bholka Range.														
B/3	Dry standing Sal ..	..	10	28	44	54	39	41	17	9	4	246	485 (Sal) .	North Bholka Compartment 5.
	Dry Sal, fallen ..	4	12	26	42	53	36	22	31	5	7	238		
	Dry standing badly shaped Sal.	..	1	..	..	..	..	..	..	..	..	1		
B/4	Dry Sal, standing ..	..	2	26	31	38	31	19	6	3	2	158	247 (Sal) ..	South Bholka Compartment 5.
	Dry Sal, fallen ..	..	2	9	7	10	13	4	1	..	..	46		
	Dry badly shaped and defective Sal.	..	..	11	5	6	13	4	3	..	1	43		
B/5	Dry Sal, standing ..	..	8	36	67	71	57	31	10	3	3	286	352 (Sal) ..	South Bholka Compartments 1 and 6.
	Dry Sal, fallen ..	.	2	4	4	4	3	3	..	..	..	20		
	Dry badly shaped and defective Sal.	..	2	3	13	10	9	4	3	..	2	46		
Plantation Clearing Lots of 1936-37.														
Rajabhatkhawa Range.														
RP/1	Green Sal, felled ..	..	..	1	1	1	10	11	11	7	64	106	*125 (Sal) ..	South Rajabhatkhawa Compartment 10.
	Dry Sal, felled ..	..	..	..	2	..	3	1	1	2	3	12		
	Dry Sal, uprooted ..	..	..	..	..	..	1	1	1	1	3	7		
RP/2	Green Sal, felled ..	..	..	..	1	1	3	3	6	1	24	39	*62 (Sal) ..	South Rajabhatkhawa Compartment 10.
	Dry Sal, felled ..	..	..	..	5	2	3	3	1	3	5	22		
	Dry Sal, uprooted ..	..	..	..	..	..	..	1	..	..	..	1		

*Sold by tender.

Condition.

1. The Officer holding the auction is not bound to accept the highest or any offer for any lot. The sale of any lot, the value of which exceeds Rs. 5,000, shall not be complete until confirmed by the Conservator of Forests, Bengal.

2. If the Officer holding the auction accepts an offer for any lot, the purchaser who has made the accepted offer shall immediately deposit as earnest money Rs. 100 in currency notes if the bid is below Rs. 1,000, Rs. 200 for a bid between Rs. 1,000 and Rs. 2,000, and Rs. 300 for a bid over Rs. 2,000. This earnest money will be returned if the sale is not confirmed, and will be transferred to the security deposit if the sale is confirmed; but if the amount of the earnest money be more than the required security deposit, the excess amount of the earnest money will be credited as part revenue for the lot.

3. Purchasers will be required to deposit security as follows:—

(1) For Clear Felling Lots, 10 per cent. of the purchase money.
(2) For Selection Coupes, 15 per cent. of the purchase money.
(3) For Dry Sal Coupes, 20 per cent. of the purchase money.

Payment of the security deposit according to the foregoing scale must be completed within fifteen days after the date of confirmation of the sale. The amount of security will be calculated to the nearest rupee.

4. Purchasers will be required to sign agreements in the printed form for outright sales (a copy of which may be seen at the Divisional Forest Offices at Darjeeling, Kurseong, Kalimpong, Buxa, Jalpaiguri and Rajabhatkhawa Subdivisional Forest Office).

5. The following are among the conditions of the agreement:—

(*a*) Felling and extraction to be completed before the 31st December 1938 except in the case of clear felling areas which must be completed by the 15th March 1937.

(*b*) The purchase money to be paid in approximately equal instalments on or before the following dates, or as may subsequently be fixed by the Divisional Forest Officer:—

For Clear Felling Lots.

1st instalment	.. ..	1st October 1936.
2nd instalment	.. ..	1st December 1936.
3rd instalment	.. ..	1st February 1937.

For Selection Felling and Dry Felling Lots.

1st instalment	.. ..	1st December 1936.
2nd instalment	.. ..	1st April 1937.
3rd instalment	.. ..	1st November 1937.
4th instalment	.. ..	1st April 1938.

(*c*) In clause 6 of the agreement, a period of two months from date of confirmation of sale will be allowed for claim to shortage in number of trees and timber.

(*d*) Purchasers of green lots must bark all trees within one week of felling, unless previously removed.

6. Failure to complete the payment of security deposit by the prescribed date will render the purchaser liable to forfeiture of the earnest money and failure to sign the agreement within one month of confirmation of sale will render the purchaser liable to forfeiture of the security deposit.

The lot or lots so affected shall be resold by public auction at the discretion of the Divisional Forest Officer, and the purchaser shall be liable for any loss, short of bid, on such resale.

7. In clear felling lots purchasers will be permitted to take away the tops of the trees they buy for fuel on free cart-load permit, until 15th March 1937, after which royalty rate will have to be paid for any such export. Tops of either over 8 feet in length or more than 3 feet in girth must be hammer marked as timber. Sufficient Sal tops must be left by the purchasers for fencing the plantations. Purchasers of the Rajabhatkhawa Clearing Felling areas will not be allowed to take away the Sal tops for fuel, this coupe only includes the timber in the trees sold and not pieces of under 8 feet in length and 3 feet in girth.

N.B.—The girth of green trees recorded above are at 4 feet from the ground and are over bark and are from the thicker end in the case of felled trees and logs.

F. J. A. HART, Deputy Conservator of Forests, Buxa Division.

Baksa-Duar, the 4th August 1936.

Notification A.

NOTICE is hereby given under sections 6 and 13, Act XI of 1859, that the undermentioned estates and shares of estates in the district of Faridpur will be put up for sale at the office of the Collector of that district on the 24th September 1936 at 11 a.m. for arrears of revenue (and other demands which by law are realizable as arrears of land revenue).

When in columns 5, 7 and 9 of the following statement it is stated that only a share is to be sold, it is to be understood that a separate account is kept for that share :—

Tauzi No.	Name of mahal and pargana.	Sadar jama of whole estate.	Whether the whole estate is to be sold.	If only a share is to be sold, specification of such share or shares.	Names of proprietors of property to be sold.	If only a share is to be sold, the sadar jama of such share.	If the whole estate is to be sold, the arrears due from it.	If only a share is to be sold, the arrears due from it.
1	2	3	4	5	6	7	8	9
		Rs. a. p.				Rs. a. p.	Rs. a. p.	Rs. a. p.
250	Taluk Panchas Hazari Char, pargana Kasimnagor.	4,289 0 0	Whole	....	Amarendra Nath Roy and others.	..	200 15 9	..
1141	Taluk Narayanpur Kismat, pargana Telihati Amirabad.	8,659 6 11	No ..	Residuary share consisting of 12 annas only. All other shares than that specified above will be excluded from sale, viz., S. A. No. 1 of 4 annas.	Nanibala Dasi as guardian and another.	1,994 8 11	..	347 2 11
2436	Taluk Brajanath Pal Chowdhury, pargana Satair.	42,278 3 0	No ..	Residuary share consisting of 5 annas only. S. A. No. 1 consisting of 6 annas. S. A. No. 5 consisting of 2 annas. All other shares than those specified above will be excluded from sale, viz., S. A. No. 3 of 2 annas and S. A. No. 6 of 1 anna.	Sital Bala Debi .. Sarat Chandra Goswami. Ditto ..	13,207 4 9 15,873 9 1 5,291 15 0	.. .. ..	4,392 13 3 11,684 8 10 1,760 1 10
6467	Taluk Alexander Thomas Saheb. Surplus alluvial accretion to Badrasan known as Gopalpur, pargana Baikanthapur.	1,263 0 0	Whole	....	Lala Rajendra Kumar Basu and others.	..	34 8 9	..
6518	Exess land of Mauza Salepur, pargana Nasti.	1,455 0 0	Do. ..	....	Dinesh Chandra Chatterjee and another.	..	181 0 0	..
6692	Deara Taluk Amrita Nath Das, pargana Makimpur.	663 0 0	No ..	Residuary share consisting of 12 annas. All other shares than that specified above will be excluded from sale, viz., S. A. No. 1 consisting of 4 annas.	Rabindra Kumar Sarkar as guardian.	497 4 0	..	61 14 0
6771	Deara taluk Fazlali Khan, pargana Kasimpur, Shehalapatti.	7,627 0 0	Whole	....	Md. Israil Chowdhury, Receiver, Gopalpur Wakf Estate.	..	6,166 0 3	..

N.B.—This notification is issued in respect of instalments of revenue due on or before the 31st Jaistha, 1343 B.S., of which the latest date of payment was 29th June 1936.

Faridpur, the 20th August 1936.

[ILLEGIBLE], *for* Collector.

In the High Court of Judicature at Fort William in Bengal, in Insolvency.

NOTICE OF ADJUDICATION ORDER

No. 107 OF 1936.

Re James Harry Rayfield, residing at No. 8, Chapel Road, Hastings, in the suburbs of Calcutta, and working for gain as an assistant of Messrs. Allen Berry & Co., Ltd., of No. 24 B & C, Park Street, in the town of Calcutta, ex parte the debtor.

K. P. Mustaphy, debtor's solicitor.

ON the 12th day of August 1936 an order was made by the High Court of Judicature at Fort William in Bengal in its insolvency jurisdiction adjudging the abovenamed as an insolvent.

Note.—All debts due to the estate should be paid to me.

Dated this 17th day of August 1936.

G. M. FALKNER, Official Assignee.

In the High Court of Judicature at Fort William in Bengal, in Insolvency.

NOTICE OF ADJUDICATION ORDER

No. 108 OF 1936.

Re Bhabadeb Mukherjee, residing at No. 48, Barrackpore Trunk Road, in the district of 24-Parganas, and carrying on business as jute brokers and order suppliers at No. 4, Commercial Building, in the town of Calcutta, under the name and style of B. D. Mukherjee & Co., ex parte the debtor.

Raj Kumar Basu, debtor's solicitor.

ON the 13th day of August 1936 an order was made by the High Court of Judicature at Fort William in Bengal in its insolvency jurisdiction adjudging the abovenamed as an insolvent.

Note.—All debts due to the estate should be paid to me.

Dated this 17th day of August 1936.

G. M. FALKNER, Official Assignee.

In the High Court of Judicature at Fort William in Bengal, in Insolvency.

NOTICE OF ADJUDICATION ORDER.

No. 109 OF 1936.

Re Ramanand and Sri Kissen, both residing at No. 34, Nalini Seth Road, in the town of Calcutta, and lately carrying on business in co-partnership with each other and also with one Dwarkadas, under the name, style and firm of Dwarkadas Srikissen, at No. 1, Burtollah Street, in Calcutta aforesaid, but both now of no occupation, ex parte the debtors.

M. G. Poddar, Attorney for the debtors.

ON the 15th day of August 1936, an order was made by the High Court of Judicature at Fort William in Bengal in its insolvency jurisdiction adjudging the abovenamed as insolvents.

Note.—All debts due to the estate should be paid to me.

Dated this 19th day of August 1936.

G. M. FALKNER, Official Assignee.

In the High Court of Judicature at Fort William in Bengal, in Insolvency.

NOTICE OF ADJUDICATION ORDER.

No. 110 OF 1936.

Re Rameswar Prosad Jalan, a service-holder, residing at No. 196, Darmahatta Street, in the town of Calcutta, and lately carrying on business as timber merchant at No. 187, Darmahatta Street, in Calcutta aforesaid, ex parte the debtor.

P. D. Himatsingka & Co., debtor's solicitors.

ON the 17th day of August 1936, an order was made by the High Court of Judicature at Fort William in Bengal in its insolvency jurisdiction adjudging the abovenamed as an insolvent.

Note.—All debts due to the estate should be paid to me.

Dated this 21st day of August 1936.

G. M. FALKNER, Official Assignee.

In the High Court of Judicature at Fort William in Bengal, in Insolvency.

(1) No. 146 OF 1930.

Re Attarsing Moolsing.

(2) No. 168 OF 1930.

Re Mrs. Marie Pearson.

NOTICE is hereby given that dividends are intended to be declared in the above estates. Persons claiming to be creditors in the above estates are required to file their claims supported by affidavit and vouchers on or before the 31st August 1936, after which date no claims received by the undersigned will be considered.

Persons who have already lodged their claims need not file fresh claims.

A form of proof of debt may be had on application from the undersigned.

G. M. FALKNER, Official Assignee.

10, Old Post Office Street, Calcutta, the 17th August 1936.

(1729—1)

In the Court of the Sub-Judge at Asansol.

Section 19 of the Provincial Insolvency Act.

INSOLVENCY CASE No. 22 OF 1936.

H. A. Merrit, petitioner.

TAKE notice that the petition for insolvency filed by the aforesaid petitioner has been admitted, and that the Court has fixed the 18th September 1936 as the date for the hearing thereof.

K. BANERJI, Sub-Judge.

Asansol, the 18th August 1936. (1739—1)

In the Court of the District Judge of Bankura.

INSOLVENCY CASE No. 3 OF 1936.

Jotirmoy Dutta, son of late Pitambar Dutta, of Jamtora, police-station Chhatna, district Bankura, petitioner.

NOTICE is hereby given to his creditors that the abovenamed petitioner was adjudged insolvent by order of this Court, dated the 1st August 1936, and he was directed to apply for his final discharge within six months.

S. K. GANGULI, District Judge.

Bankura, the 20th August 1936. (1743—1)

In the Court of the Addl. District Judge of Hooghly at Howrah.

INSOLVENCY PETITION No. 138 OF 1935.

NOTICE is hereby given that Bipin Behari Khanra, son of late Jharu Charan Khanra, of 44, Ananda Banerjee Lane, thana Howrah, district Hooghly, was on the 7th December 1935 adjudged an insolvent. The 4th September 1936 has been fixed for hearing the final discharge application.

S. N. GUHA RAY, Addl. District Judge.

Howrah, the 15th August 1936.

(1732—1)

In the Court of the District Judge of Khulna.

INSOLVENCY CASE No. 6 OF 1936.

IT is hereby notified that Abdul Mina, son of late Ketabdi Mina, of Baniakhamar, police-station Khulna, district Khulna, applied for being adjudicated as an insolvent on 29th July 1936, and 3rd September 1936 has been fixed for hearing of the case.

B. N. CHAKRAVARTY, District Judge.

Khulna, the 22nd August 1936. (1745—1)

ORDER OF ADJUDICATION.

Section 27 of the Provincial Insolvency Act, V of 1920.

In the Court of the District Judge at Midnapore.

INSOLVENCY APPLICATION No. 58 OF 1936.

PURSUANT to a petition, dated 17th June 1936, against Barendra Nath Maity, son of late Kali Prasanna Maity, of Durmuth, pargana Majnamutha, thana Contai, district Midnapore, debtor, and on the application of Sristidhar Jana, son of late Nandaram Jana, of Durmuth, pargana Majnamutha, thana Contai, district Midnapore, creditor, and on reading his application and hearing his pleader, it is ordered that the debtor be and the said debtor is hereby adjudged insolvent.

It is further ordered that the debtor do apply for his discharge within one year from this date, and that 12th September 1936 has been fixed for proof of debts.

Dated this 8th day of August 1936.

S. K. HALDAR, District Judge.

(1733—1)

ORDER OF ADJUDICATION.

In the Court of the District Judge of Noakhali.

INSOLVENCY CASE No. 7 OF 1936.

PURSUANT to a petition, dated 24th April 1936, filed by the debtor Bazler Rahman, son of late Hanu Miah, of Purba Chandrapur, police-station Feni, district Noakhali, and on the application of the debtor and on reading the application and hearing the debtor, it is ordered that the debtor is hereby adjudged insolvent.

Dated this 12th day of August 1936.

J. N. SEN, *for* District Judge.

(1738—1)

NOTICE TO CREDITORS OF APPLICATION FOR DISCHARGE.

Section 41 (1) of the Provincial Insolvency Act, V of 1920.

In the Court of the District Judge at Suri.

INSOLVENCY CASE No. 24 OF 1931.

(1) Nikunja Behari Das, (2) Abanish Chandra Das and (3) Indra Bhusan Das, sons of late Nadai Chand Das, of Margram, police-station Rampurhat, chauki Rampurhat, district Birbhum, applicants.

TAKE notice that the abovenamed insolvents have applied at the Court for their discharge, and that the Court has fixed the 2nd day of October 1936 at 11 o'clock for hearing the application.

Dated this 18th day of August 1936.

B. K. GUHA, District Judge.

(1731—1)

MR. AMULYA CHARAN NASKER, B.L., intends to be enrolled as an Advocate, High Court.

(1740—4)

MR. SISIR KUMAR BASU, M.A., B.L., intends to enroll as an Advocate of the Calcutta High Court.

(1680—4)

MR. AJAY KUMAR BASU, B.Sc., B.L., intends to be enrolled as an Advocate of the Calcutta High Court.

(1581—4)

MR. BIRESWAR CHATTERJEE, M.Sc., B.L., desires to be enrolled as an Advocate, High Court.

(1592—4)

MR. SUSIL CHANDRA DAS GUPTA, LL.B., desires to be enrolled as an Advocate, High Court, Calcutta.

(1593—4)

MR. SATYENDRA NATH SEN desires to be enrolled as an Advocate, High Court.

(1594—4)

MR. SAURENDRA MOHAN BASU desires to be enrolled as an Advocate, High Court.

(1595—4)

MR. HEMENDRA NATH LAHIRI, M.A., B.L., intends to be enrolled as an Advocate of the High Court.

(1596—4)

MR. TARUN KUMAR DHAR intends to get enrolled as an Advocate, High Court.

(1597—4)

MR. GURUPADA CHAKRAVARTY, B.L., desires to be enrolled as an Advocate, High Court, Calcutta.

(1598—4)

AMARENDRANATH ROY CHOWDHURY, M.A., B.L., desires to be enrolled as an Advocate, High Court.

(1599—4)

MR. POLISETTI MAMILLAIAH, B.A., B.L., desires to be enrolled as an Advocate, High Court.

(1600—4)

MR. CHOWDHURY FAZLUL ALI, M.A., B.L., desires to be enrolled as an Advocate, High Court.

(1601—4)

MR. JNAN KUMAR CHATTERJEE, B.Com., B.L., intends to be enrolled as an Advocate, High Court.

(1602—4)

BHAGAWATI PRASAD KHAITAN, Attorney-at-Law, intends to be enrolled as an Advocate, High Court.

(1603—4)

MR. PROVAT KUMAR SEN GUPTA, M.A., B.L., desires to be enrolled as an Advocate of the High Court.

(1607—4)

MR. MANINDRA KUMAR DEB, B.L., desires to be enrolled as an Advocate of the High Court.

(1608—4)

MR. SUKUMAR GHOSE desires to be enrolled as an Advocate of the High Court, Calcutta.

(1609—4)

MR. PHANINDRA NATH GUPTA, B. L., desires to be enrolled as an Advocate of the High Court.

(1610—4)

AMAL CH. CHATTERJEE, LL.B., Advocate (Punjab), intends to be enrolled as an Advocate, High Court.

(1641—4)

MR. AMARENDRA NATH GUPTA, M.Sc., B.L., intends to be enrolled as an Advocate, High Court.

(1630—4)

MR. BIMAL CHANDRA DAS GUPTA, M.A., B.L., intends to be enrolled as an Advocate, High Court.

(1642—4)

MR. NISHITH RANJAN MUKHOPADHYAY, B.L., intends to be enrolled as an Advocate, High Court.

(1651—4)

MR. SATYA BHUSAN CHAKRABERTTY, M.A., B.L., intends to be enrolled as an Advocate, High Court.

(1657—4)

MR. SUDHIR KUMAR BASU, M.A. B.L., intends to be enrolled as an Advocate, Calcutta High Court.

(1658—4)

KHAN BAHADUR SHARFUDDIN AHMAD, B.L., intends to be enrolled as an Advocate, High Court.

(1663—4)

APPLICATIONS are invited for the post of Civil Medical Officer, Kurseong, district Darjeeling. The pay of the post will be Rs. 300—25—400 with a pony allowance of Rs. 20 per month.

The appointment will be for five years in the first instance, renewable, on satisfactory service.

Candidates should possess a medical degree of a recognised Indian University, but preference will be given to one possessing higher British qualifications in Medicine or Surgery. Candidates should be between 30 and 40 years of age and able to ride.

The selected candidate will be on probation for six months. Leave for one month on full pay for every year will be admissible on condition that a *locum tenens* is provided at his own expense.

Canvassing will disqualify. Applications supported by evidence of the qualifications possessed and of age should reach the Surgeon-General with the Government of Bengal, Writers' Buildings, Calcutta, not later than the 9th September 1936.

D. P. GOIL, Major General, I.M.S.,
Surgeon-General with the Govt. of Bengal.

WANTED a Muslim Lecturer in Mathematics for the Islamia College at Calcutta. The scale of pay of the post is Rs. 125—25/2—150—20/2—250—15/2—265 (efficiency bar)—15/2—310—20/2—350.

2. Candidates must possess a Master's degree in Mathematics (in addition to a good Honours degree) of a recognised Indian University or Honours degree of a European University. A satisfactory record of teaching experience will be an additional qualification.

3. Canvassing in any form, direct or indirect, will be regarded as a disqualification.

4. Persons in the Subordinate Educational Service possessing the requisite qualifications are permitted to apply.

5. Applications, supported by documentary evidence of date of birth, qualifications and experience, together with the father's name and particulars of home and present addresses (village, post office, thana and district) will be received by the Principal, Islamia College, up to 31st August 1936.

WANTED by the district board of Jalpaiguri an Assistant Engineer on a pay of Rs. 150—25/2—200—10—300 with efficiency bar at Rs. 200 and travelling allowance according to the Fundamental Rules. None but a B. E. need apply. Preference will be given to an experienced man having knowledge in district board works. Application with copies of testimonials will be received by the undersigned up to 15th September 1936.

Rai Sahib K. C. GUE, B.A., B.Sc., B.E.,
District Engineer, Jalpaiguri.

Dated Jalpaiguri, the 20th August 1936.

(1744—8)

Custom House Notice.

NOTICE is hereby given that whereas Messrs. Turnbull Brothers (Merchants), Ltd., have failed to meet the demand made for duty on 29 packages of whisky marked T. B. L., *ex* s.s. "Jalajyati"; and bonded at 1/1, Umakanta Sen Lane, under warehousing bill of entry No. 92 of 5th January 1931, the said goods will be sold by auction on the 31st August 1936 at the sale rooms of Messrs. Mackenzie Lyall & Co., under the provisions of section 119 of the Sea Customs Act.

G. N. BOWER, Collector of Customs.

Custom House, Calcutta, the 14th August 1936.

(1722—2)

BOARD OF REVENUE, BENGAL.

"A" Group—Wards Branch.

ORDER No. 11357W.

WHEREAS application has been made by (1) Babu Bholanath Banerji, (2) Babu Purna Chandra Banerji, (3) Babu Biswa Nath Banerji, co-sharers of the Panihati estate in the district of the 24-Parganas, praying that they may be declared disqualified proprietors for the purpose of managing their own estate and that their estate be brought under the management of the Court of Wards, under clause (*c*) of section 6 of the Bengal Court of Wards Act, IX (B.C.) of 1879, as amended by the Bengal Decentralization Act, 1915 (Bengal Act V of 1915), the Court of Wards is pleased to declare that the said Bholanath Banerji and others are disqualified proprietors within the meaning of that section and that it is expedient in the public interest that the estate should be managed by the Court of Wards.

Under sections 7 and 35 of the said Act [Act IX (B.C.) of 1879] the Court of Wards also declares that it has decided to take under its charge the property of the disqualified proprietors abovenamed, and it directs that possession be taken of such property on behalf of the said Court.

By order of the Court of Wards, Bengal,

S. BANERJEE, Secretary.

Calcutta, the 13th August 1936.

(1728—1)

BOARD OF REVENUE, BENGAL.

"A" Group—Wards Branch.

ORDER No. 11358W.

UNDER section 27, Act IX (B.C.) of 1879, the Court of Wards hereby declares Babu Shambhunath Banerji, co-sharer of the Panihati estate in the district of the 24-Parganas, to be the minor under clause (*b*) of section 6 of the Act.

Under section 35 of the said Act the Court of Wards also declares that it has decided to take under its charge the person and property of the minor abovenamed, and it directs that possession be taken of such person and property on behalf of the said Court.

By order of the Court of Wards, Bengal,

S. BANERJEE, Secretary.

Calcutta, the 13th August 1936.

(1727—1)

THE Bengal and Madras Service Family Pension Fund which is provisionally managed and assisted by Government has for its object the provision of monthly pensions for the maintenance of the widows and children of subscribers and is open, with certain exceptions, to all active and pensioned members of the Uncovenanted service of Government (except those serving under the Government of Bombay), and to Local Fund servants earning pensions from Government. Some of the special features of the fund are (1) that widowed daughters incapable of re-marriage or children labouring under such mental or bodily infirmities as incapacitate them from earning their livelihood or preclude the possibility of marriage (in case of a daughter) are admitted to its benefits; and (2) that subscribers to the Widows and Daughters' branches are entitled to a refund of 30 per cent. of the premia paid, should the nominee predecease them after five years of admission. The second quinquennial valuation of the Fund has been completed by the Actuary to the Government of India, and his report discloses very favourable results. For forms of application and rules of the Fund apply to the Accountant-General, Bengal, Imperial Secretariat Buildings, Calcutta.

Custom House Notice.

NOTICE is hereby given that whereas Messrs. Turnbull Brothers (Merchants), Ltd., have failed to meet the demand made for duty on 40 packages of brandy marked T. B. L., *ex* s.s. "Norvada", and bonded at 1/1, Umakanta Sen Lane, Malda, under warehousing bill of entry No. $\frac{12}{1}$ of $\frac{\text{3rd March 1931}}{\text{1st April 1931}}$ the said goods will be sold by auction on the 28th August 1936 at the sale rooms of Messrs. Mackenzie Lyall & Co., under the provisions of section 119 of the Sea Customs Act.

G. N. BOWER, Collector of Customs.

Custom House, Calcutta, the 13th August 1936.

(1721—2)

Imperial Bank of India.

THE following appointments on the Bank's Staff are hereby notified:—

Mr. P. C. Chanda, Staff Assistant, Park Street Branch, Calcutta, to act as Accountant at that Branch as from the 24th July 1936.

Mr. S. C. Roy Chowdhury, Staff Assistant, Burra Bazar Branch, Calcutta, to act as Accountant at that Branch as from the 3rd August 1936.

H. J. FITZ-PATRICK,

Secretary and Treasurer (offg.).

Calcutta, the 14th August 1936. (1737—1)

Lost.

THE Government promissory note No. 202171 of the 3½ per cent. loan of 1900-01 for Rs. 1,000 originally standing in the name of Bhoobun Mohini Debee (since deceased), the proprietress, by whom it was never endorsed to any other person, having been lost, notice is hereby given that payment of the above note and the interest thereupon have been stopped at the Public Debt Office, Reserve Bank of India, Calcutta, and that application is about to be made for the issue of duplicate in favour of Sm. Sasti Money Debi. The public are cautioned against purchasing or otherwise dealing with the abovementioned security.

Signature of the advertiser—Sasti Money Debi.

Residence—Khasbati, Halisahar, Hazinagore P.O., district 24-Parganas.

(1730—3)

Note.

PORTION of the following note of the Calcutta Circle of Issue is stated to have been destroyed. Payment of its value has been claimed by the person whose name is placed against the number. Any other person claiming a right to it is warned to communicate at once with the undersigned :—

Regtd. No.	No. of the note.	Value. Rs.	Name and address of the claimant.
W. D. 13 of 36.	T/13, 659649	100	Sekh Abdul Rauf, s/o Sk. Mohamad Nayeen, village Nipania, p. o. Marhowrah, district Saran.

S. GUPTA, Currency Officer.

Reserve Bank of India, Issue Department, Calcutta, the 20th August 1936.

In the matter of Indian Companies Act, 1913, and

In the matter of the Dacca Provident Co., Ltd. (in liquidation).

NOTICE is hereby given that a general meeting of the shareholders of the Dacca Provident Co., Ltd., will be held at the Liquidator's office at Kalirbazar, Narayanganj, on the 27th September 1936, at 4-30 p.m., to consider and approve the liquidator's final account of winding up.

ALI ACKS, Liquidator.

Narayanganj, the 12th August 1936.

(1734—1)

In the matter of the Indian Companies Act, VII of 1913, and

In the matter of Press House Contractors, Limited (in liquidation).

PURSUANT to section 209 (1) of the Indian Companies Act, VII of 1913, a meeting of the creditors of the Company abovenamed will be held at the office of the liquidators at 12/1, Old Post Office Street, Calcutta, Saturday, the 5th September 1936, at 2 p.m.

For Ganguli Mukherji & Co.,

A. K. MUKHERJEE, B. Com., G.D.A., R.A.,

Liquidator.

12/1, Old Post Office Street, Calcutta, the 18th August 1936.

(1742—1)

In the matter of the Indian Companies Act, VII of 1913, and

In the matter of Press House Contractors, Ltd. (in liquidation).

NOTICE is hereby given that at an extraordinary general meeting of the Company held at the registered office on the 7th August 1936 at 12 noon resolutions were duly passed—(i) putting the Company into voluntary liquidation and (ii) appointing Messrs. Ganguli Mukherji & Co. of 12/1, Old Post Office Street, Calcutta, as liquidators with all powers under the Indian Companies Act, VII of 1913.

B. D. MUKHERJI, Chairman.

Dated the 8th August 1936. (1735—1)

In the matter of the Indian Companies Act,

and

In the matter of the Great Indian Leather Works, Ltd.

NOTICE is hereby given, pursuant to section 209, that a meeting of the creditors of the above Company will be held on the 9th September 1936, at 4 p.m., at liquidator's office at 261, Bowbazar Street, Calcutta. The creditors are required to send their names and address and their particulars of their claims to the undersigned.

K. R. SEN, Liquidator,

261, Bowbazar Street, Calcutta.

Dated Calcutta, the 21st August 1936.

(1741—1)

In the matter of Indian Companies Act, 1913, and

In the matter of the Great Indian Leather Works, Ltd. (in liquidation).

AT an extraordinary general meeting of the members of the abovementioned Company duly convened and held on the 14th day of August 1936, the following extraordinary resolution was duly passed:—

"That it has been proved to the entire satisfaction of this meeting the Company cannot by reason of its liabilities continue its business and accordingly the Company be wound up voluntarily and that Mr. K. R. Sen was appointed liquidator for the purpose of such winding up."

H. K. BOSE, Chairman.

87, Durga Charan Mittra Street, Calcutta, the 18th August 1936.

(1736—1)

Public Service Commission (India).

APPLICATIONS are invited for the post of Veterinary Investigation Officer for Sind and Ajmer-Merwara. (2) A candidate should be a Member of the Royal College of Veterinary Surgeons or a graduate of an Indian Veterinary College and should have some experience in Veterinary Research work. He should preferably know Sindhi; otherwise he will be required to learn the language within a reasonable period. (3) Pay Rs. 400—25—500. (4) Post non-pensionable and temporary for five years. Probation one year. Service terminable by three months' notice on either side. (5) Age not exceeding 35 years. (6) Government servants eligible if permitted by their departments. (7) Canvassing, in any form, will disqualify. (8) Last date for receipt of applications 22nd September 1936. Prescribed application forms and further particulars may be obtained from the Secretary, Public Service Commission, Simla. Applicants for forms must mention the name of the post.

Simla, the 19th August 1936. (1748—1)

NOTICE TO CREDITORS OF THE DATE OF HEARING OF AN INSOLVENCY PETITION.

Section 19 of the Provincial Insolvency Act, V of 1920.

In the Court of the District Judge at Chittagong.

INSOLVENCY APPLICATION No. 28 OF 1936.

WHEREAS debtor Rasik Chandra Das, son of late Ratnamoni Das, of Noapara alias Chand Roy Chowdhurypara, police-station Raozan, district Chittagong, has applied to this Court by a petition, dated 27th day of July 1936, to be declared an insolvent under the Provincial Insolvency Act, V of 1920, this is to give notice that the Court has fixed the 19th day of September 1936 for the hearing of the aforesaid petition and the examination of the debtor.

J. GEORGE, *for* District Judge.

Chittagong, the 19th August 1936. (1747—1)

In the Court of the District Judge of Hooghly.

NOTICE is hereby given, under clause (2) of section 12 of the Provincial Insolvency Act, V of 1920, to his creditors that the insolvency petition of Dhirendra Krishna Rakshit, son of Bepin Behary Rakshit, of Kulakash, thana Jangipore, district Hooghly, has been admitted by this Court as No. 66 of 1936, and that the 19th September 1936 has been fixed for the hearing thereof.

[ILLEGIBLE], *for* District Judge.

Chinsura, the 20th August 1936. (1749—1)

In the Court of the District Judge of Hooghly.

NOTICE is hereby given, under clause (2) of section 12 of the Provincial Insolvency Act, V of 1920, to his creditors that the insolvency petition of Sanat Kumar Chakravarty, son of late Jogendra Nath Chakravarty, of Bhadreswar, thana Bhadreswar, district Hooghly, has been admitted by this Court as No. 69 of 1936, and that the 26th September 1936 has been fixed for the hearing thereof.

[ILLEGIBLE], *for* District Judge.

Chinsura, the 21st August 1936. (1750—1)

In the Court of the District Judge of Khulna.

INSOLVENCY CASE No. 7 OF 1936.

IT is hereby notified that Promotha Nath Das and Manmotha Nath Das, sons of late Panchanan Das, of Kushadanga, police-station Kalaroa, district Khulna, applied for being adjudicated as insolvents on 31st July 1936, and 7th September 1936 has been fixed for hearing of the case.

B. N. CHAKRAVARTY, District Judge.

Khulna, the 22nd August 1936.

(1746—1)

Lost.

A RECEIPT numbered 36687, dated 15th December 1927, and granted by the Imperial Bank of India, Public Debt Office, on submission of the undermentioned Government Promissory Notes. Notice of loss has been given to the Reserve Bank of India, Public Debt Office, and the undersigned is about to apply for surrender of the securities :—

G. P. Note No.	Loan.	Amount.	Holders' names.
		Rs.	
004749 ..	5 per cent., 1945-55.	100	Lalit Madhab Banerji and Surja
022301 ..	5½ per cent., 1928.	100	Kumar Mukerji.

Names of the proprietors—Lalit Madhab Banerji and Surja Kumar Mukerji.

Residence—24, Sankaripara Road, Bhowanipore, Calcutta.

(1751—1)

Imperial Library.

Secretariat Buildings, 6, Esplanade East, Calcutta.

Open on—

Week days and Saturdays from 10 a.m. to 7 p.m.
Sundays and Gazetted holidays from 2 p.m. to 5 p.m.

THE Imperial Library is also a Lending Library. It is free to all except children. There is no subscription to pay.

K. M. ASADULLAH, Librarian.

CINCHONA FACTORY PRODUCTS.

By order of the Government of Bengal Cinchona Factory Products as manufactured and packed at the Cinchona Factory, Mungpoo, Darjeeling district, will be sold and distributed by the Superintendent of the **Presidency Jail,** *in original packages* as received from the Mungpoo Factory, at the rates herein noted **from the 1st May 1926 :—**

Name of drug.	Price per lb. in powder form. Taken at a time. For 60 lbs. and upwards.	For 6 lbs. and over but less than 60 lbs.	For any quantity less than 6 lbs.	Price in 5 grain tablets. 1,000 tablets.	500 tablets.	250 tablets.	Price by weight per lb.
	Rs.	Rs.	Rs.	Rs.	Rs. a.	Rs. a.	Rs.
Quinine Bisulphate ..	18	19	20	16	8 0	4 4	..
,, Hydrobromide ..	23	24	25	20	10 0	5 4	..
,, Bihydrobromide ..	26	27	28	23	11 8	6 0	..
,, Salicylate ..	24	25	26	..	..	..	..
,, Tannate ..30 per cent. 35 per cent.	14	15	16	..	..	..	14

N.B.—Packing free in tins, sizes 1 lb., 8 oz. and 4 oz. only. Packing in bottles or smaller sizes of tins extra.

Quinine Sulphate.

For 60 lbs. and upwards at a time .. Rs. 18 per lb.
For 6 lbs. and over but less than 60 lbs. at a time .. .. .. ,, 19 ,,
For any quantity less than 6 lbs. .. ,, 20 ,,

Totaquina.

Irrespective of quantity .. Rs. 13-8 per lb.
For sale to hospitals and dispensaries in Bengal, Bihar, Orissa and Assam.

Quinine Hydrochloride.

For 60 lbs. and upwards at a time .. Rs. 23 per lb.
For 6 lbs. and over but less than 60 lbs. at a time .. .. .. ,, 24 ,,
For any quantity less than 6 lbs. .. ,, 25 ,,

Quinine Di-Hydrochloride.

For 60 lbs. and upwards at a time .. Rs. 25 per lb.
For 6 lbs. and over but less than 60 lbs. at a time .. .. .. ,, 26 ,,
For any quantity less than 6 lbs. .. ,, 27 ,,

Quinidine Sulphate.

For 60 lbs. and upwards at a time .. Rs. 20 per lb.
For 6 lbs. and over but less than 60 lbs. at a time .. .. .. ,, 21 ,,
For any quantity less than 6 lbs. .. ,, 22 ,,

Cinchonidine Sulphate.

For 60 lbs. and upwards at a time .. Rs. 25 per lb.
For 6 lbs. and over but less than 60 lbs. at a time .. .. .. ,, 26 ,,
For any quantity less than 6 lbs. .. ,, 27 ,,

Cinchonine Sulphate.

For 60 lbs. and upwards at a time .. Rs. 12 per lb.
For 6 lbs. and over but less than 60 lbs. at a time .. .. .. ,, 13 ,,
For any quantity less than 6 lbs. .. ,, 14 ,,

*Cinchona Febrifuge (Powder).

For 60 lbs. and upwards at a time .. Rs. 9 per lb.
For 6 lbs. and over but less than 60 lbs. at a time .. .. .. ,, 9 ,,
For any quantity less than 6 lbs. .. ,, 10 ,,

*Cinchona Febrifuge (Tablets).

For 60 lbs. and upwards at a time .. Rs. 10 per lb.
For 6 lbs. and over but less than 60 lbs. at a time .. .. .. ,, 10 ,,
For any quantity less than 6 lbs. .. ,, 11 ,,

Supply of Cinchona Febrifuge to all authorised indentors will be rationed in the proportion of 1½ of Cinchona Febrifuge to 1 of Quinine Sulphate at their existing prescribed prices.

Cinchona Bark (in 50 pound original bags).

Per bag .. Rs. 25.

4 grains Quinine Tablets.

Rs. a.
2 8 per box of 200 tablets (for Bengal and other provinces).
12 1 per 5 boxes—(Transit charges inclusive) for Public in Bengal.
15 8 per lb.

5 grains Quinine Tablets.

Rs. a.
15 8 per lb. sold in 1 lb., ½ lb. and ¼ lb. tins.

5 grains Quinine Hydrochloride Tablets.

Rs. a.
20 0 per 1,000 tablets.
10 0 ,, 500 ,,
5 4 ,, 250 ,,

Packing free in tins, sizes 1 lb., 8 oz. and 4 oz. only. Packing in bottles or smaller sizes in tins extra.

5 grains Quinine Bihydrochloride Tablets.

Rs. a.
22 0 per 1,000 tablets.
11 0 ,, 500 ,,
6 0 ,, 250 ,,

Packing free in tins, sizes 1 lb., 8 oz. and 4 oz. only. Packing in bottles or smaller sizes in tins extra.

Transit charges extra in every case.

***Cinchona Febrifuge** is for sale to Government and Charitable Institutions, Local Bodies and Missionaries only. **It is not for sale to Private Firms or the General Public.**

Quinine Sulphate is now open for sale to the Public at the above rates. But it will be supplied to Hospitals and Dispensaries in Bengal, Bihar, Orissa and Assam at Rs. 18 per pound irrespective of quantities.

Five and ten boxes of Quinine Tablets are sold to the public at the concession rates which will be intimated on application.

Provinces other than Bengal, Bihar, Orissa and Assam will get their supplies of Sulph. Quinine and Cinchona Febrifuge Powder and Tablets from the Director, Botanical Survey of India, Sibpur, Howrah.

Local sale at the jail gate from 10 to 12 noon.

The system of payment is by—*Cash in advance*—by "*Treasury Challans,*" which should accompany the order or indent.

In cases where this is not possible, payment should be made by "*Remittance Transfer Receipts*" or crossed "*Cheques.*"

Indents unaccompanied by cash in advance will be sent Value Payable Post. Credit sale is not allowed except under special circumstances.

In the case of *Government officers* payments will be recovered by *Book Transfer, i.e., Countersigned Invoices,* in the event of *Cash* not accompanying the indent by "*Treasury Challans,*" *Remittance Transfer Receipt or Cheque.*

2. Price and postage must accompany the price of the drug (when the drug is required by post).

The name of the Railway and Steamer Station or Post Office must be written distinctly when the parcels are required by Rail, Steamer or by Post. Railway parcels are sent by passenger train only.

A scale of postage is given below.

	1 oz.	2 ozs.	4 ozs.	½ lb.	¾ lb.	1 lb.
	As.	As.	As.	As.	As.	Rs. A.
Quinine Sulph. ..	..	..	7	7	11	0 11
Cinchona Feb. ..	..	..	7	7	11	0 11
Cinchona Feb. Tablets	..	..	7	7	11	0 11
Quinine Hydrochlor. ..	5	5	7	7	..	0 11
Quinine Di-hydrochlor.	5	5	7	7	..	0 11
Quinine Tablets ..	..	..	7	7	11	0 11
Totaquina ..	..	..	7	7	11	0 11

	1¼ lb.	2 lb.	3 lb.	4 lb.	5 lb.	6 lb.
	Rs. A.	Rs. A.	Rs. A.	Rs. A.	Rs. A.	Rs. A.
Quinine Sulph. ..	0 15	1 3	1 7	1 15	2 7	2 11
Cinchona Feb. ..	0 15	0 15	1 7	1 11	2 3	2 7
Cinchona Feb. Tablets	0 15	1 3	1 11	1 15	2 7	2 15
Quinine Hydrochlor. ..	0 15	1 3	1 7	1 15	2 7	2 11
Quinine Di-hydrochlor.	0 15	0 15	1 7	1 11	2 3	2 7
Quinine Tablets ..	0 15	0 15	1 7	1 11	1 15	2 3
Totaquina ..	0 15	1 3	1 7	1 15	2 7	2 11

Two different drugs are not packed in the same parcel and postage must be paid separately for each kind.

N.B.—**Postage stamps are not accepted as revenue.**

Government reserve the right to alter the price without notice.

Government Publications for Sale

At the Bengal Government Press (Publication Branch)

Sales Office, Writers' Buildings, Calcutta.

Customers in the United Kingdom and the Continent of Europe may obtain the publications either direct from the High Commissioner's Office or through any book-seller.

NOTICE—Books required for private use can be purchased. Applications should be accompanied by remittance in each case.

All remittances on account of subscriptions to or enquiries regarding prices of Gazettes, Indian Law Reports or other Government publications available for sale should be addressed to the Superintendent, Government Printing, Bengal Government Press, Alipore. Advices of remittances should be sent to the same address.

Remittances on account of advertisements in official publications should be addressed to Accountant, Bengal Secretariat.

All remittances must include postal and packing charges which are shown in parentheses against each item in the list below.

All advertisements intended for publication in the *Calcutta Gazette* should be sent direct to the Superintendent, Government Printing, Bengal Government Press, Alipore, 24-Parganas.

Books required for the public service should be obtained through the Heads of Departments.

New Publications issued during the Current Quarter.

Legislative Council Proceedings.

For the meetings held on the 13th, 14th, 16th to 20th, 23rd to 27th and 30th March 1936. Vol. XLVIII, No. 2. Rs. 2-3 (11a.).

Acts.

Bengal Police Act (Bengal Act VII of 1869) as modified up to 1st May 1936. A. 1 (9p.).

Bengal Muhammadan Marriages and Divorces Registration Act (Bengal Act I of 1876) as modified up to 20th May 1935. In Urdu. As. 12 (1a.).

Bengal Water Hyacinth Act (Bengal Act XIII of 1936). A. 1 (1a.).

Court-fees Act (Reprint of I. C. Act VII of 1870) as modified up to 15th April 1936. As. 2 (2a.).

Howrah Bridge Act (Bengal Act IV of 1926) as modified up to 1st May 1936. As. 2 (1a.).

Miscellaneous Publications.

Administration. Annual Reports for Establishment, Buildings, Railways and Communications, 1934-35. As. 6 (1a.).

Agriculture. Annual Report of the Department of —, Bengal, 1934-35. Part I. As. 4 (2a.).

Bulletin No. 47. Neem Oil and its Treatment in Soap-making. A. 1 (1a.).

No. 70. Utilisation of Waste Glass in the manufacture of Sodium Silicate, 1936. A. 1 (1a.).

Censors. Manual of the Bengal Board of—, 1936. As. 8 (2a.).

Cinematograph. Annual Report on the Working of—Act in Bengal, 1936. Re. 1-4 (1a.).

Crop. Season and—Report of Bengal, 1935-36. As. 4 (2a.).

Debtors. Bengal Agricultural—Rules, 1936. As. 8 (3a.).

Dispensaries. Triennial Report on the Working of Hospitals and—under the Government of Bengal, 1932-34. Rs. 2 (6a.).

List of Hospitals—and other Medical Institutions in Bengal, corrected up to 31st December 1935. Rs. 2-2 (4a.).

District Boards. Resolution reviewing the Reports on the Working of—in Bengal, 1933-34. As. 3 (3a.).

Health. Bengal Public—Report, 1934. Re. 1 (6a.).

Reports of the—Departments of the Ports of Calcutta and Chittagong, 1935. As. 4 (1a.).

Legislation. Effect of—list for 1935. A. 1 (1a.).

Nursery and Plantation Notes for Bengal, 1933. Re. 1 (6a.).

Police. Bengal—Training College Manual, 1936. As. 9 (3a.).

Registration. Statistical Returns with a Brief Note of the—Department in Bengal, 1935. As. 3 (2a.).

Smoke Nuisances. Thirtieth Annual Report of Bengal—Commission, 1935. A. 1 (1a.).

Statistics. Agricultural—of Bengal, 1934-35. As. 6 (2a.).

Survey. Annual Report on the—and Settlement Operations in Bengal, 1934-35. Rs. 3 (5a.).

Veterinary. Annual Reports of the Civil—Department, Bengal, and of Bengal—College, 1934-35. As. 4 (2a.).

Workmen's. Annual Report on the Working of—Compensation Act in Bengal, 1935. As. 3 (1a.).

Publications issued between 1st January and 30th June 1936.

Legislative Council Proceedings.

For the meetings held on the 25th to 29th November, 2nd to 7th and 9th to 12th December 1935, Vol. XLVII, No. 1. Re. 1-14 (9a.).

For meetings held on the 13th, 14th and 16th to 20th December 1935. Vol. XLVII, No. 2. Re. 1-4 (7a.).

For the meetings held from 12th to 14th, 17th, 24th, 26th, 27th and 28th February and 2nd and 9th March 1936. Vol. XLVIII, No. 1. Re. 1-6 (7a.).

Acts.

Bengal Development Act (Bengal Act XVI of 1935). A. 1 (1a.).

Bengal Alluvial Lands Act (Bengal Act V of 1920) as modified up to 1st June 1935. A. 1 (1a.).

Bengal Village Self-Government Amendment Act (Bengal Act VIII of 1935), in Bengali. A. 1 (1a.).

Bengal Village Self-Government Temporary Provision Act (Bengal Act XX of 1935), in Bengali. A. 1 (1a.).

Bengal Land Registration Amendment Act (Bengal Act III of 1936). A. 1 (9p.).

Bengal Development Act (Bengal Act XVI of 1935), in Bengali. As. 4 (1a.).

Bengal Court of Wards Amendment Act (Bengal Act VI of 1936). A. 1 (9p.)

Bengal Alluvial and Diluvial Amendment Act (Bengal Act IX of 1936). A. 1 (9p.).

Bengal Wakf Amendment Act (Bengal Act IV of 1936), in Bengali. A. 1 (9p). In Urdu. A. 1 (9p.).

Bengal Village Self-Government Act (Bengal Act V of 1919) as modified up to 1st August 1935. As. 2 (2a.).

Bengal Agricultural Debtors' Act (Bengal Act VII of 1936), in Bengali. As. 4 (2a.).

Bengal Whipping Act (Bengal Act X of 1936). A. 1 (9p.).

Bengal Municipal Amendment Act (Bengal Act XI of 1936). A. 1 (9p.).

Bengal Agricultural Debtors' Act (Bengal Act VII of 1936). A. 1 (9p.).

Calcutta Suburban Police Act (Bengal Act II of 1866) as modified up to 1st June 1930. As. 8 (2a.).

Court-fees—Bengal Third Amendment Act (Bengal Act I of 1936). A. 1. (9p.).

Calcutta Municipal Second Amendment Act (Bengal Act II of 1936). A. 1 (1a.).

Calcutta Municipal Amendment Act (Bengal Act VIII of 1936). A. 1. (9p.).

Calcutta Municipal Second Amendment Act (Bengal Act XII of 1936). A. 1 (9p.).

Howrah Bridge Amendment Act (Bengal Act V of 1936). A. 1 (9p.).

Indian Stamp Act (Reprint of I. C. Act II of 1899) as modified up to 1st January 1936. As. 4 (3a.).

Miscellaneous Publications.

Accountantship. Examination papers for 1936. A. 1 (1a.).

Administration. Report on the—of Bengal, 1934-35. Re. 1-8 (7a.).

Advisory Committee. Final Report of the Provincial—on the Delimitation of Constituencies, 1935. As. 4 (2a.).

Agriculture. Annual Report of the Department of—, Bengal, 1934-35. Part II. Re. 1-4 (5a.).

Apprenticeship. Questions for the—Training Examination, 1936. As. 8 (1a.).

Audit. Annual Report on the working of Local—Department, 1933-34. As. 3 (2a.).

Budget. Civil—Estimate, 1936-37. Rs. 2 (11a.).

P. W. D.—Estimate of 60—Civil Works not charged to Revenue in Bengal, 1936-37. A. 1 (1a.).

P. W. D.—Estimate of Provincial Civil Works in Bengal, 1936-37. As. 4 (2a.).

Bulletin (Agriculture Department). No. 1 of 1921. A Brief History of Experimental Cotton Cultivation in the Plains of Bengal, 1935. As. 2 (1a.).

No. 2 of 1921. Historical Notes on Experiments with Jute in Bengal, 1935. As. 4 (1a.).

No. 66. Report on the Industrial Survey of the District of Pabna, 1934. As. 12 (2a.).

No. 63. Handbook of Tanning. Rs. 2-8 (7a.).

Chronological Tables, 1936. A. 1 (1a.).

Classified List and Distribution Return of Establishment of Roads and Buildings, corrected up to 1st January 1936. As. 9 (2a.).

Co-operative. Annual Report on the working of—Societies in Bengal, 1935. As. 10 (4a.).

Constables. Major Chamney's Manual for Instruction of—in their Duties, in Hindi. As. 12 (4a.).

Electoral. Bengal—Orders and Rules, 1936. As. 4 (4a.).

Electricity. Regulations under Rule 40A of the Indian—Rules, 1922. Published 1936. As. 4 (1a.).

Electrical Energy. Report of the Committee appointed to enquire into the charges for—levied by the Calcutta Electric Supply Corporation, Ltd., 1936. Rs. 2-8 (9a.).

Excise. Report on the Administration of—Department in Bengal, 1934-35. Re. 1-2 (3a.).

Factories. Abstract of the—Act, 1934, and Bengal—Rules, 1935. As. 2 (1a.).

Abstract of the—Act, 1934, and Bengal—Rules, 1935, in Bengali. As. 2 (1a.).

Abstract of the—Act, 1934, and Bengal—Rules, 1935, in Hindi. As. 2 (1a.). Nepali. As. 2 (1a.).

Cotton Ginning and Pressing—Rules, 1925. Published 1936. A. 4 (1a.).

Forest (s). Annual Progress Report on—Administration in Bengal, 1934-35. Re. 1 (4a.).

The—of Bengal, 1935. Rs. 3 (5a.).

High Court. Rules of the—Appellate Side, 7th edition, 1936. Re. 1-8 (7a.).

Rules from Civil Rules and Orders of—regarding the Service of Processes in Bengali, 1936. As. 4 (2a.).

Industries. Annual Administration Report of the Department of—, Bengal, 1934-35. As. 6 (3a.).

Irrigation Department. Classified List and Distribution Return of Establishment of the—, corrected up to 1st January 1936. As. 12 (2a.).

Justice. Report on the Administration of Civil—in Bengal, 1934. As. 15 (4a.).

Legislation. Effect of—List for 1934. A. 1 (2a.).

List of Members of the Bengal Legislative Council, etc., 24th list, dated the 16th January 1936. As. 5 (2a.)

Of members of the Bengal Legislative Council, etc., 25th list, dated the 25th April 1936. As. 5 (2a.).

Medical College. Annual Report on the Working of the—, Calcutta, 1934-35. As. 8 (1a.).

Physical Education. Suggestions for the Improvement of—in Schools, 1936. As. 5 (2a.).

Public Health. Annual Report of the Chief Engineer,—Department, Bengal, 1934. As. 8 (1a.).

Schools. Syllabuses of Studies for Secondary—for Boys and Girls in Bengal, 1936. As. 4 (2a.).

List of High—and Colleges in Bengal corrected up to 31st December 1935. As. 2 (2a.).

Steam-vessels. List of Inland—and Motor—plying in Bengal, Bihar and Orissa corrected up to 31st December 1935. Re. 1-3 (1a.).

Survey. Bengal—and Settlement Manual, 1935, Re. 1-2 (12a.).

Tenancy. Terms and conditions on which applications under section 158A of the Bengal—Act may be allowed by Government, 1935. A. 1 (1a.).

Tenderers. Instructions for the Guidance of—of Calcutta Police Uniform, 1936. Rs. 3 (2a.).

Tobacco. Bengal—(Sales Licensing) Rules, 1935. A. 1 (1a.).

Trade Union. Report on the working of the Indian—Act in Bengal for the year ending 31st March 1935 As. 8 (1a.).

Wards. Report on the Administration of the—, Attached and Trust Estates in Bengal, 1934-35. As. 11 (3a.).

Waste Lands. Bengal—Manual, 1936. Re. 1 (8a.).

Registered No. C207

No. 35 of 1936

The Calcutta Gazette

THURSDAY, AUGUST 27, 1936.

CONTENTS:

	PAGE.		PAGE.
Statement under the Cotton Ginning and Pressing Factories Act, 1925 ..	1159	Prices-current (wholesale and retail) of Food-grains, Salt, etc., in the districts of Bengal for the first half of August 1936	1167—1170
Statements of weekly gauge-readings on certain rivers in Bengal	1160—1162		
Weather and Crop Report for the week ending 19th August 1936	1163—1166	Vital Statistics of towns of Bengal for the weeks ending 8th and 15th August 1936	1171—1172

SUPPLEMENT.

Official Papers.

FORM C—BENGAL.

STATEMENT OF COTTON PRESSED IN THE BENGAL PRESIDENCY FOR THE WEEK ENDING THE 14th AUGUST 1936.

[Section 5 (2) of the Cotton Ginning and Pressing Factories Act, 1925.]

Name of Division or block.	Number of bales pressed.				District included in the block.
	During the week.	During the corresponding week last year.	Since 1st September 1935 (the date prescribed by the Local Government as the commencement of the season).	During the corresponding period last year.	
The Bengal Presidency	610 bales of 400 lbs. each.	542	65,944	46,703	All districts in the Presidency.

J. B. McBRIDE,

Chief Inspector of Factories, Bengal.

Statement of weekly gauge readings on the river Ganges at Rampur Boalia for the week ending the 15th August 1936.

Date.	Hour.	Height of surface above P. W. D. datum.	Height of surface above P. W. D. datum on the same date last year.	Remarks.
1936.				
9th August	7 a.m.	61·60	58·45	Value of B. M. on Rajshahi College step =64·73 P. W. D. Zero of gauge=0·00 P. W. D.
10th „	7 „	61·90	58·75	
11th „	7 „	62·40	59·10	
12th „	7 „	62·60	59·30	
13th „	7 „	62·80	59·65	
14th „	7 „	63·15	60·00	
15th „	7 „	63·25	60·35	

Highest recorded level on 26-8-1879=64·24.
Lowest recorded level on 24-4-1931=32·05.

S. GUPTA, *Subdivisional Officer,*
Irrigation Department, Rajshahi.

Rampur Boalia, the 16th August 1936.

Statement showing the gauge readings at Dacca Waterworks Station on the river Buriganga for the week ending 1st August 1936.

Date.	At highest water.		At lowest water.		Commencement of—		Remarks.	
	Time.	Reading.	Time.	Reading.	Ebb tide.	Flow tide.	7 a.m.	5 p.m.
1936.								
26th July ..	Tide is not perceptible.						16·0	16·1
27th „ ..							16·1	16·1
28th „ ..							16·05	16·0
29th „ ..							16·0	16·05
30th „ ..							16·0	16·1
31st „ ..							16·15	16·3
1st August ..							16·45	16·6

Notable high and low water-levels of previous years.

		Taken at high tide.			Taken at low tide
27th August	1906 ..	70·5	23rd February	1907 ..	51·06
5th September	1909 ..	66·86	13th „	1908 ..	51·06
10th August	1910 ..	69·86	12th March	1912 ..	51·06
1st „	1911 ..	68·46	6th „	1914 ..	50·60
13th „	1912 ..	67·16	22nd February	1915 ..	50·30
31st „	1915 ..	69·7	15th „	1916 ..	50·60
8th „	1916 ..	68·1	3rd March	1917 ..	51·0
12th „	1917 ..	67·1	21st February	1918 ..	51·40
13th „	1918 ..	69·12	26th „	1919 ..	50·4
2nd „	1919 ..	66·8	18th „	1920 ..	50·9
8th September	1920 ..	66·9	19th „	1921 ..	50·9
28th July	1921 ..	68·4	8th March	1922 ..	51·05
10th August	1922 ..	68·00	14th „	1923 ..	50·8
31st July	1923 ..	66·15	16th February	1924 ..	50·50
29th August	1924 ..	68·82	5th March	1925 ..	50·9
8th September	1925 ..	68·52	9th February	1926 ..	2·2
15th August	1926 ..	19·6	27th „	1927 ..	2·10
17th September	1927 ..	18·70	16th „	1928 ..	2·2
22nd August	1928 ..	20·0	21st „	1929 ..	2·0
13th July	1929 ..	17·8	24th „	1930 ..	2·3
12th September	1930 ..	18·65	28th „	1931 ..	2·2
16th August	1931 ..	21·7	18th „	1932 ..	1·8
6th September	1932 ..	18·5	6th „	1933 ..	2·10
7th „	1933 ..	17·80	26th March	1934 ..	2·40
23rd August	1934 ..	19·35	15th February	1935 ..	1·70
1st September	1935 ..	19·80			

N.B.—Zero of the gauge at Dacca Waterworks prior to 11 a.m. on the 8th January 1926= —48·51 with reference to P. W. D. datum.

Zero of the gauge at Dacca Waterworks since 11 a.m. of the 8th January 1926—0·00 with reference to P. W. D. datum.

S. CHANDA, for *Executive Engineer,*
Khulna Division.

Khulna, the 22nd August 1936.

Statement showing the gauge readings at Dacca Waterworks Station on the river Buriganga for the week ending 8th August 1936.

Date.	At highest water.		At lowest water.		Commencement of—		Remarks.	
	Time.	Reading.	Time.	Reading.	Ebb tide.	Flow tide.	7 a.m.	5 p.m.
1936.								
2nd August ..							16·7	16·8
3rd „ ..							16·9	16·95
4th „ ..							17·05	17·2
5th „ ..	Tide is not perceptible.						17·45	17·7
6th „ ..							17·9	18·0
7th „ ..							18·05	18·1
8th „ ..							18·3	18·35

Notable high and low water levels of previous years.

		Taken at high tide.			Taken at low tide.
27th August	1906 ..	70·5	23rd February	1907 ..	51·06
5th September	1909 ..	66·86	13th „	1908 ..	51·06
10th August	1910 ..	69·86	12th March	1912 ..	51·06
1st „	1911 ..	68·46	6th „	1914 ..	50·60
13th „	1912 ..	67·16	22nd February	1915 ..	50·30
31st „	1915 ..	69·7	15th „	1916 ..	50·60
8th „	1916 ..	68·1	3rd March	1917 ..	51·0
12th „	1917 ..	67·1	21st February	1918 ..	51·40
13th „	1918 ..	69·12	26th „	1919 ..	50·4
2nd „	1919 ..	66·8	18th „	1920 ..	50·9
8th September	1920 ..	66·9	19th „	1921 ..	50·9
28th July	1921 ..	68·4	8th March	1922 ..	51·05
10th August	1922 ..	68·00	14th „	1923 ..	50·8
31st July	1923 ..	66·15	16th February	1924 ..	50·50
29th August	1924 ..	68·82	5th March	1925 ..	50·9
8th September	1925 ..	68·52	9th February	1926 ..	2·2
15th August	1926 ..	19·6	27th „	1927 ..	2·10
17th September	1927 ..	18·70	16th „	1928 ..	2·2
22nd August	1928 ..	20·0	21st „	1929 ..	2·0
13th July	1929 ..	17·8	24th „	1930 ..	2·3
12th September	1930 ..	18·65	28th „	1931 ..	2·2
16th August	1931 ..	21·7	18th „	1932 ..	1·8
6th September	1932 ..	18·5	6th „	1933 ..	2·10
7th „	1933 ..	17·80	26th March	1934 ..	2·40
23rd August	1934 ..	19·35	15th February	1935 ..	1·70
1st September	1935 ..	19·80			

N.B.—Zero of the gauge at Dacca Waterworks prior to 11 a.m. on the 8th January 1926= −48·51 with reference to P. W. D. datum.

Zero of the gauge at Dacca Waterworks since 11 a.m. of the 8th January 1926=0·00 with reference to P. W. D. datum.

S. CHANDA, for *Executive Engineer,*
Khulna Division.

Khulna, the 22nd August 1936.

DISTRICT REPORTS ON WEATHER AND CROPS.

For the week ending on the 19th August 1936.

Summary.—Excepting heavy showers in places the rainfall was generally light to moderate. More rain is needed for the transplantation of winter paddy in parts of West and North Bengal. Harvesting of autumn crops continues in full swing. Prospects of standing crops are generally satisfactory. During the week ending Saturday, the 15th August, 1,729 and 5,112 persons received gratuitous relief in Nadia and Murshidabad, respectively. In Burdwan, daily average of persons receiving gratuitous relief was 8,190 during the week ending Saturday, the 15th idem. The average price of common rice for the province has risen by about 0·45 per cent. as compared with that of the previous week.

Serial No.	District and subdivision.	Rainfall.	Price of common rice, in seers, per rupee.		Character of the weather, condition of crops, etc.
			This week.	Previous week.	
1	2	3	4	5	6
		Inches.			
1	24-Parganas ..	1·40	9¾	9½	Weather seasonable. Condition of standing crops is favourable. Fodder and water are sufficient. No import or export of paddy except in Basirhat where import of paddy from East Bengal continues. Agricultural loans also gratuitous relief were distributed in Sadar, Basirhat and Diamond Harbour. Harvesting of jute continues.
	Diamond Harbour..	2·03	9¾	9½	
	Barrackpore ..	1·83	8½	8½	
	Baraset ..	1·90	9	9	
	Basirhat ..	0·51	11	11	
2	Nadia ..	0·86	8½	8⅝	Weather seasonable. Fodder and water are sufficient. No agricultural loan distributed during the week. Gratuitous relief was given to 37 persons in Sadar, 1,666 persons in Chuadanga and to 26 persons in Meherpur for the week ending 15th August. Harvesting of jute not yet commenced except in Kushtia subdivision.
	Kushtia ..	3·49	9½	10	
	Meherpur ..	1·06	11	11	
	Chuadanga ..	0·91	11	11	
	Ranaghat ..	0·30	9½	9½	
3	Murshidabad ..	0·90	9½	9¾	Weather seasonable. Prospects of standing crops are favourable. Fodder and water are sufficient. No large import or export. Number of persons receiving gratuitous relief in the distressed areas for the week ending Saturday, the 15th August, was 271, 3,451 and 1,390 in Lalbagh, Kandi and Jangipur subdivisions, respectively. Floods in Domkal, Jellanghi and Berhampore police-stations in Sadar, Lalgola, Bhagwangola and Ranuagar police-stations in Lalbagh and Raghunathganj, Suti and Shamshergani police-stations in Jangipur subdivisions. Food required. People and cattle may want rescue. Flood abating in Kandi subdivision. Relief is being arranged.
	Lalbagh ..	0·71	9¾	10½	
	Jangipur ..	1·95	10	10	
	Kandi ..	1·99	10	9¾	
4	Jessore ..	0·58	11½	11	Weather seasonable. Prospects of standing crops are fair Harvesting of *aus* paddy and jute continues. No large export or import. Fodder and water are sufficient.
	Jhenidah ..	0·40	13	13	
	Magura ..	3·00	13	13	
	Narail ..	0·30	12	12	
	Bongaon ..	1·09	10	10	
5	Khulna ..	0·61	10	10	Weather seasonable. Fodder and water are sufficient. Test relief works suspended.
	Satkhira ..	1·76	10½	(*n*)	
	Bagerhat ..	2·20	8½	8½	

(*n*) Not reported.

Serial No.	District and sub-division.	Rainfall.	Price of common rice, in seers, per rupee.		Character of the weather, condition of crops, etc.
			This week.	Previous week.	
1	2	3	4	5	6
		Inches.			
6	Burdwan ..	1·30	9	9½	Weather seasonable. Condition of crop is favourable. Fodder is sufficient. 8,190 persons daily on avarage received gratuitous relief during the week ending 15th August 1936.
	Asansol ..	2 37	11	11	
	Katwa ..	0·74	9	9	
	Kalna ..	Nill	8½	8½	
7	Birbhum ..	1·80	10	10	Weather seasonable and cloudy. Prospects of standing crops are fair. Transplantation of winter paddy is finished. Water is sufficient but there is scarcity of fodder.
	Rampurhat ..	0·50	10½	10	
8	Bankura ..	0·84	10	10½	Weather seasonable. Transplantation of paddy seedlings is nearly completed. Weeding has been affected to some extent on account of heavy rain in Khatra Circle. Prospects of standing crops are good. Fodder and water are sufficient. Cattle-disease is reported from Indas and Kotalpur thanas.
	Vishnupur .	2·68	9½	9½	
9	Midnapore ..	2·09	10	10	Transplantation of winter paddy continues. Cattle-disease is reported from Ghatal subdivision. Fodder and water are sufficient.
	Contai ..	0·58	9½	9	
	Tamluk ..	0·18	8½	8½	
	Ghatal ..	0·13	11½	11½	
	Jhargram ..	1·10	10	10	
10	Hooghly ..	0·97	9½	9½	Weather seasonable. Fodder and water are sufficient. Harvesting of jute continues.
	Serampore ..	1·88	9½	9½	
	Arambagh ..	0·76	9½	9½	
11	Howrah ..	0·67	10	10	Fodder and water are sufficient. Harvesting of jute not yet commenced.
	Uluberia ..	0·42	9½	9½	
12	Rajshahi (Rampur-Boalia).	1·30	9½	9½	Weather seasonable. Due to the rise of the Padma parts of Sadar and Nator subdivisions have gone under water and damage has been caused to the standing crops there. The prospects of standing crops in other parts of the district appears to be fair. There is scarcity of fodder in the flooded area. Harvesting of jute continues.
	Naogaon ..	0·85	10½	10½	
	Nator ..	1·15	9½	9½	
13	Dinajpur ..	1·69	10	10	Weather seasonable. Transplantation of winter paddy continues. Fodder and water are sufficient. Cattle-disease is reported from Birganj thana.
	Thakurgaon ..	3·32	11	11	
	Balurghat ..	1·95	11	11	
14	Jalpaiguri ..	1·33	9½	10	Weather very hot. Transplantation of winter paddy and harvesting of *bhadoi* paddy are nearing completion. Fodder and water are sufficient. Cattle-disease is reported from Alipur Duar and Bhalka Tahsils.
	Alipur ..	1·75	9½	9½	

Serial No.	District and sub-division.	Rainfall.	Price of common rice, in seers, per rupee.		Character of the weather, condition of crops, etc.
			This week.	Previous week.	
1	2	3	4	5	6
		Inches.			
15	Darjeeling ..	3·50	8	8	Weather favourable. Transplantation of paddy and *marua* is about to be completed. *Bhuta* and potatoes are being harvested. Fodder and water are sufficient.
	Kurseong ..	1·94	8	8	
	Siliguri ..	0·50	9½	9½	
	Kalimpong ..	4·30	7	7	
16	Rangpur ..	4·11	10	11	Weather seasonable. More rain is needed in Nilphamari subdivision. Prospects of standing crops are fair. No large export or import. Fodder and water are sufficient. Harvesting of jute continues.
	Nilphamari ..	1·48	10½	10½	
	Kurigram ..	3·15	10	10	
	Gaibandha ..	1·39	9	9	
17	Bogra ..	0·78	10½	10½	Agricultural operation not affected by weather condition. Jute and *aus* paddy are being harvested. Fodder and water are sufficient.
18	Pabna ..	5·31	10	10	Weather seasonable and rainy. Condition of standing crops is favourable. *Aus* paddy has been harvested. Cutting of jute and steeping continue in full swing. Prospects and outturn of jute and *aus* paddy seem bright. Flood water which inundated pasture-lands and standing crops at places is receding. Fodder and water are sufficient except in Bhangura Circle wherefrom scarcity of fodder is reported. Harvesting of jute continues.
	Serajganj ..	2·74	11½	11	
19	Malda ..	1·54	10½	10½	Weather seasonable. *Bhadoi* Deara sides totally destroyed by flood. Transplantation of winter rice continues. Sporadic cases of cattle-disease reported from Barind area. Fodder and water available.
20	Cooch Behar ..	1·52	12 4/16	12 4/16	Weather seasonable. Preparation of lands for winter paddy and transplantation of seedlings continue briskly. Harvesting of autumn paddy, cutting, steeping and washing of jute continuing. Prospects and condition of standing crops fair. Fodder and water sufficient. Cattle-disease is reported from Dinhatta, Tufanganj and Mathabhanga subdivisions.
21	Dacca ..	3·71	11½	11	Rainfall at North Sadar (Kapasia) 1·34. Weather seasonable and its effects on the agricultural operations are fair. No large export and import. Fodder and water are sufficient. Cattle-disease exists in Kapasia police-station. Harvesting of jute continues.
	Manikganj ..	0·50	10	10	
	Narayanganj ..	2·37	12	12	
	Munshiganj ..	3·42	10½	10½	

Serial No.	District and sub-division.	Rainfall.	Price of common rice, in seers, per rupee.		Character of the weather, condition of crops, etc.
			This week.	Previous week.	
1	2	3	4	5	6
		Inches.			
22	Mymensingh ..	2·38	10	10	Weather seasonable. Harvesting continues. Condition of crops is fair. Fodder and water are available.
	Jamalpur ..	3·04	10½	10½	
	Tangail ..	0·88	10	10	
	Netrakona ..	2·44	11¼	11⅛	
	Kishorganj ..	3·15	10⅛	10⅛	
23	Faridpur ..	8·18	11½	11½	Weather seasonable. Condition of standing crops is fair. Fodder and water are sufficient.
	Goalundo (Rajbari)	1·26	11	11	
	Madaripur ..	4·31	11	10½	
	Gopalganj (*a*) ..	2·58	10½	(*n*)	
24	Bakarganj (Barisal)	3·14	10¼	10¼	Weather seasonable. Prospects of standing crops are not good in Sadar and fair in Pirojpur and good in Bhola and Patuakhali. Fodder and water are sufficient.
	Pirojpur ..	1·01	10½	10	
	Patuakhali ..	4·75	10½	10½	
	Dakshin Shabazpur (Bhola).	2·79	10	10	
25	Chittagong ..	0·93	10 11*	10 11*	Weather seasonable. Condition of standing crops is fair in Sadar and unsatisfactory at Cox's Bazar owing to flood. Fodder and water are sufficient. Cattle-disease is reported from places. Panga salt sells at 14 seers at Sadar and 12 seers at Cox's Bazar.
	Cox's Bazar ..	0·62	10	(*n*)	
26	Tippera (Comilla) ..	5·37	10½	10½	Weather fair.
	Brahmanbaria ..	1·85	10½	10½	
	Chandpur ..	6·33	11¼	11¼	
27	Noakhali ..	5·52	10	10½	Weather seasonable. Cattle-disease (Anthrax) has subsided. Fodder and water sufficient.
	Feni ..	2·60	10½	10½	
28	Chittagong Hill Tracts.	4·76	9	11	Weather seasonable. Its effects are favourable. Cattle disease is gradually subsiding. Fodder and water are sufficient.
29	Tripura State ..	3·09	10½	10½	Weather seasonable. Fodder and water are sufficient. Cattle-disease exists in Belonia Division. Cotton sells at Rs. 9 to Rs. 12 and jute at Rs. 2-8 to Rs. 5-8 per maund.

(*a*) The rainfall at Haridaspur, which is very near to Gopalganj, is shown here.

* Burma rice.

(*n*) Not reported.

S. ABDULLAH, for *Director of Agriculture, Bengal.*

Dacca, the 24th August 1936.

Wholesale prices current of food grains, gur, etc., in the undermentioned marts of Bengal for the first half of August 1936.

Marts.	Paddy local (best quality).			Paddy local (common quality).			Rice local (best quality).		
	Present return.	Next preceding return.	Corresponding return of last year.	Present return.	Next preceding return.	Corresponding return of last year.	Present return.	Next preceding return.	Corresponding return of last year.
1	2	3	4	5	6	7	8	9	10
	Rs. a. p.	Rs. a. p.	Rs. a. p.	Rs. a. p.	Rs. a. p.	Rs. a. p.	Rs. a. p.	Rs. a. p.	Rs. a. p.
Calcutta	3 0 0	2 15 0	2 10 0	2 10 0	2 10 0	2 8 0	5 8 0	5 8 0	5 12 0
Burdwan	2 8 0	2 8 0	2 2 0	2 6 0	2 6 0	2 0 0	4 10 0	4 10 0	4 10 0
Midnapore	2 8 0	2 8 0	2 2 0	2 2 0	2 2 0	1 14 0	4 12 0	4 12 0	4 4 0
Chittagong	1 14 0	1 14 0	1 13 0	1 13 0	1 13 0	1 11 0	4 10 0	4 10 0	5 0 0
Dacca	2 8 0	2 8 0	2 5 0	2 4 0	2 4 0	2 2 0	4 6 0	4 4 0	3 14 0
Pabna	2 6 0	2 4 0	2 6 0	1 12 0	2 0 0	2 1 0	5 0 0	4 14 0	4 12 0
Rangpur	2 2 0	2 2 0	2 0 0	1 14 0	1 14 0	1 14 0	5 4 0	5 4 0	5 8 0
Serajganj (Pabna)	..	..	..	..	..	..	..	..	..
Sarisabari (Mymensingh) ..	..	..	..	..	..	..	..	..	..
Narayanganj (Dacca)	..	..	..	..	..	..	..	..	..

Marts.	Rice local (common quality).			Wheat.			Raw cotton.		
	Present return.	Next preceding return.	Corresponding return of last year.	Present return.	Next preceding return.	Corresponding return of last year.	Present return.	Next preceding return.	Corresponding return of last year
	11	12	13	14	15	16	17	18	19
	Rs. a. p.	Rs. a. p.	Rs. a. p.	Rs. a. p.	Rs. a. p.	Rs. a. p.	Rs. a. p.	Rs. a. p.	Rs. a. p.
Calcutta	5 0 0	4 12 0	4 8 0	3 11 0	3 11 0	3 4 0	21 4 0	21 12 0	16 8 0
Burdwan	4 4 0	4 4 0	3 10 0	..	..	..	..	..	..
Midnapore	3 12 0	3 12 0	3 5 6	..	..	..	..	..	..
Chittagong	3 12 0	3 12 0	3 12 0	..	..	..	..	..	..
Dacca	3 5 0	3 12 0	3 6 0	..	..	..	..	..	..
Pabna	4 6 0	4 2 0	3 10 0	..	..	..	..	..	..
Rangpur	4 6 0	4 6 0	4 0 0	..	..	..	..	..	..
Serajganj (Pabna)	..	..	..	..	..	..	..	..	..
Sarisabari (Mymensingh) ..	..	..	..	..	..	..	..	..	..
Narayanganj (Dacca)	..	..	..	..	..	..	..	..	..

Marts.	Coal.			Raw Jute (weighted average).			Gur (sugarcane).		
	Present Return.	Next preceding return.	Corresponding return of last year.	Present return.	Next preceding return.	Corresponding return of last year	Present return.	Next preceding return.	Corresponding return of last year.
	20	21	22	23	24	25	26	27	28
	Rs. a. p.	Rs. a. p.	Rs. a. p.	Rs. a. p.	Rs. a. p.	Rs. a. p.	Rs. a. p.	Rs. a. p.	Rs. a. p.
Calcutta	0 6 6	0 6 6	0 6 6	5 0 0	4 12 0	5 6 0	3 8 0	3 0 0	3 10 0
Burdwan	..	..	..	..	..	..	4 6 0	4 6 0	4 4 0
Midnapore	..	..	..	..	..	..	4 0 0	4 0 0	4 8 0
Chittagong	..	..	..	..	..	..	4 0 0	4 0 0	6 4 0
Dacca	..	..	..	..	..	..	3 12 0	3 12 0	5 8 0
Pabna	..	..	..	..	..	..	2 4 0	2 4 0	4 2 0
Rangpur	..	..	..	..	..	..	3 0 0 to 3 4 0	3 0 0 to 3 4 0	3 0 0 to 3 4 0
Sirajganj (Pabna)	..	..	..	(a) 4 2 0	(a) 4 0 0	5 6 0	..	..	..
Sarisabari (Mymensingh) ..	..	..	..	(a) 3 10 0 to 6 0 0	(a) 3 8 0 to 6 0 0	3 11 0 to 6 12 0	..	..	..
Narayanganj (Dacca)	..	..	..	4 0 0 to 5 2 0	3 12 0 to 5 0 0	4 12 0 to 6 2 0	..	..	..

(a) New.

Dacca, the 22nd August 1936.

S. ABDULLAH, for *Director of Agriculture, Bengal.*

Prices-current (retail) of common rice and salt in the districts of Bengal for the first half of August 1936.

Districts and Marts	Quantity per rupee in seers of eighty tolas.								
	Common rice.						Salt.		
	Average.			Cheapest.					
	Present return.	Next preceding return.	Corresponding return of last year.	Present return.	Next preceding return	Corresponding return of last year	Present return.	Next preceding return.	Corresponding return of last year.
	S. Ch.	S. Ch	S. Ch.	S. Ch	S. Ch.	S Ch	S. Ch	S Ch	S. Ch.
Presidency Division.									
24-Parganas—									
1 Chetla Hat ..	9 2	9 13	10 0	11 8	11 8	11 6	17 4G	19 6C	17 12
2 Mogra Hat ..	9 6	9 6	9 6	10 10	10 5	10 0	17 0C 16 0K	16 0C 15 0K	16 0
3 Calcutta-Behaghata..	8 0	8 6	8 12	10 0	10 0	11 8	18 10C 17 10K 16 0P	18 10C 17 10K 16 0P	16 0
Nadia—									
4 Goari	8 8	8 10	8 7	11 12	11 13	11 0	14 0P 14 0K	14 0P 14 0K	14 0†
5 Ranaghat ..	9 8	9 8	9 4	11 12	11 12	12 4	14 0P 14 0K	14 0P 14 0K	14 0†
Murshidabad—									
6 Berhampore ..	9 8	9 8	9 8	10 0	10 0	10 0	14 0K	14 0K	14 0K
7 Kandi	9 12	9 8	9 8	10 0	9 12	9 12	12 8K 12 8B	13 5K 13 5B	14 8
8 Jangipur ..	9 12	10 0	9 8	10 4	10 4	10 0	16 0K	16 0K	15 0
Jessore—									
9 Sadar	11 8	11 8	10 8	13 0	12 8	11 0	16 0P 15 0K	16 0P 16 0K	15 0 14 0K
10 Bongaon ..	10 0	10 0	9 12	12 8	12 8	12 0	14 8P 15 0K	14 8P 15 0K	14 8 13 0K
Khulna—									
11 Sadar	10 0	10 0	10 8	13 0	13 8	11 8	16 0C 16 0K	16 0C 16 0K	14 0 13 8K
12 Bagerhat ..	8 8	8 8	10 0	10 0	10 0	11 8	15 0K	15 0K	13 8
Burdwan Division.									
Burdwan—									
13 Sadar	9 4	9 4	11 0	9 8	9 8	10 8	13 0C 13 0K	13 0C 13 0K	16 0†
14 Kalna	8 7	8 8	9 6	12 0 (R)	12 4 (R)	10 8	18 0P	18 0P	16 0
Birbhum—									
15 Suri	10 0	10 0	10 0	11 0	11 0	11 0	14 0M	14 0M	14 0
16 Rampurhat ..	10 8	10 8	9 0	11 0	11 0	9 8	16 0C	16 0C	16 0
Bankura—									
17 Sadar	10 0	10 0	10 0	11 0	11 0	10 8	13 0P	14 0P	14 0
18 Vishnupur ..	8 10	9 0	10 0	9 0	10 0	10 8	13 0P	13 8P	13 0

P—Panga. R—Rangoon rice. K—Karkach. B—Bombay. C—Crushed.

N.B.—The prices of Karkach and Liverpool salt tally with each other in marts marked†.

M—Madras. G—Graham.

Prices-current (retail) of common rice and salt in the districts of Bengal for the first half of August 1936.

Districts and Marts.	Quantity per rupee in seers of eighty tolas.								
	Common rice.						Salt.		
	Average.			Cheapest.					
	Present return.	Next preceding return.	Corresponding return of last year.	Present return.	Next preceding return.	Corresponding return of last year.	Present return.	Next preceding return.	Corresponding return of last year.
	S. Ch.	S. Ch.	S. Ch.	S. Ch.	S. Ch.	S. Ch.	S. Ch.	S. Ch.	S. Ch.
BURDWAN DIVISION—*concld.*									
Midnapore—									
19 Sadar	11 0	11 0	9 10	11 11	11 11	12 6	14 0L 14 0K	14 0L	14 0
20 Contai	9 0	9 0	11 0	9 8	10 0	12 0	15 0C	13 0C	16 0
Hooghly—									
21 Sadar	9 8	9 0	9 8	11 8	11 8	10 0	15 0P	16 0P	14 8
22 Arambagh ..	9 8	9 8	11 0	10 0	10 0	11 4	15 0P 14 8K	15 8P 15 0K	15 0 14 12K
Howrah—									
23 Sadar ..	9 0	9 0	9 8	12 8	11 0	10 8	16 0C 16 0K	16 0C 13 0K	16 0
24 Uluberia ..	9 8	9 8	10 8	10 8	10 8	11 8	16 0C 13 4K	16 0C 13 0K	16 0
RAJSHAHI DIVISION.									
Rajshahi—									
25 Rampur-Boalia ..	9 8	9 8	10 0	10 0	10 4	10 8	12 0C 12 0K	12 0C 12 0K	13 4†
26 Nator	9 12	9 12	9 12	10 8	10 8	10 8	12 0C 12 0K	12 0C 12 0K	12 0†
27 Dinajpur—Railbazar Hat.	9 0	9 0	10 12	10 12	10 12	12 9	10 0K	10 0K	13 8†
28 Jalpaiguri—Sadar ..	9 0	9 0	10 8	10 8	10 0	12 0	13 0C	13 0C	13 0
Darjeeling—									
29 Sadar	9 0	8 0	9 0	9 0	9 0	10 0	10 8P 10 0K	10 8P 10 0K	10 8 9 0K
30 Siliguri ..	9 8	10 0	10 0	10 0	10 8	11 0	12 0P 12 0K 12 0C	12 0P 12 0K 12 0C	12 0†
Rangpur—									
31 Sadar	10 2	10 2	11 0	10 2	10 2	11 0	13 8P	13 8P	14 12
32 Nilphamari ..	10 12	11 0	10 0	11 14	12 4	13 0	12 8K	12 8K	12 8
33 Bogra—Sadar ..	10 9	10 8	10 14	10 12	10 12	11 4	12 0C	12 0C	12 0
Pabna—									
34 Sadar	10 0	10 0	11 0	12 8	11 8	11 8	14 8L 14 8K	14 0L 14 0K	13 0 13 4K
35 Serajganj ..	11 8	11 4	10 8	12 0	12 0	11 8	16 0L 15 0K	16 0L 15 0K	16 0 15 0K
Malda—									
36 Sadar	10 8	10 4	10 8	11 12	10 12	11 0	14 8OK 13 0K	14 8OK 14 0K	14 8 14 0K
37 Balia—Nawabganj	11 0	10 5	10 12	12 8	12 8	11 14	15 8OK 14 8K	15 8OK 14 8K	15 0 14 8K

P—Panga. K—Karkach. C—Crushed. L—Liverpool.

N. B.—The prices of Karkach and Liverpool salt tally with each other in marts marked †.

OK—Okha and other Indian varieties.

Prices-current (retail) of common rice and salt in the districts of Bengal for the first half of August 1936.

Districts and Marts.	Quantity per rupee in seers of eighty tolas.								
	Common rice						Salt.		
	Average.			Cheapest.					
	Present return.	Next preceding return.	Corresponding return of last year.	Present return	Next preceding return.	Corresponding return of last year.	Present return.	Next preceding return.	Corresponding return of last year.
	S. Ch.	S. Ch.	S. Ch.	S. Ch.	S. Ch.	S. Ch.	S. Ch.	S. Ch.	S. Ch.
Dacca Division.									
Dacca—									
38 Sadar	9 12	9 8	11 0	10 0	9 12	12 8	13 0C 13 4K	13 4C 13 4K	13 12†
39 Markadim ..	10 0	10 8	11 0	11 0	11 8	11 8	14 8K	14 8K	15 0K
Mymensingh—									
40 Nasirabad ..	10 0	10 0	10 0	10 8	11 0	11 4	13 0L 12 0K	13 0L 12 0K	13 0K
41 Netrakona ..	11 8	11 8	10 10	12 8	12 8	13 4	13 12L 12 8K	13 8L 12 8K	13 4 12 8K
Faridpur—									
42 Sadar ..	11 8	11 8	10 8	12 8	12 8	11 8	13 0K	13 0K	12 0
43 Rajbari ..	11 0	10 8	10 0	13 0	12 8	12 0	12 0C	12 0C	12 0
Bakarganj—									
44 Barisal ..	10 8	10 0	10 8	11 0	10 8	12 8	14 8C 14 8K	14 8C 14 8K	14 8 13 0K
45 Pirojpur ..	10 0	9 12	10 0	10 2	10 0	10 2	14 0C 14 0K	14 0C 14 0K	13 0†
Chittagong Division.									
Tippera—									
46 Comilla ..	9 8	10 0	10 0	(a) 13 5	10 11	13 5	14 8C	14 8C	12 13 10 10K
47 Chandpur ..	10 1	10 1	10 4	11 4	11 4	11 0	14 8C	14 8C	13 5
Noakhali—									
48 Kalitara Hat ..	10 0	9 0	10 0	11 0	10 8	10 8	13 0C 10 8K	13 0C 10 8K	13 0 11 0K
49 Feni Hat ..	10 12	10 0	10 12	(a) 14 0	10 12	12 8	14 0C 13 0K	13 0C 13 0K	15 0 10 0K
Chittagong—									
50 Sadar	8 12	8 12	8 0	10 0	10 0	10 10	13 0P	13 0P	13 0
51 Cox's Bazar ..	9 8	9 8	8 0	11 0	11 0	10 0	13 0P	13 0P	13 0
52 Chittagong Hill Tracts —Rangamati ..	11 0	11 0	10 0	12 0	12 0	11 0	10 8L 7 0K	10 8L 7 0K	13 0 6 4K

P—Panga. C—Crushed. K—Karkach. L—Liverpool.

N.B.—The prices of Karkach and Liverpool salt tally with each other in marts marked †.

(*a*) New *aush*.

Dacca, the 22nd August 1936

S. ABDULLAH, for *Director of Agriculture, Bengal.*

Vital statistics of towns with a population of 50,000 and over of the Bengal Presidency for the week ending Saturday, the 8th August 1936.

Districts.	Nos.	Towns.	Population under registration according to census of 1931.			Births registered.		Deaths registered.																							
			Male.	Female.	Total.	Number registered (excluding still-births).	Still-births registered.	Cholera.	Small-pox.	Plague.	Cerebro-spinal meningitis.	Malaria.	Enteric fever.	Measles.	Relapsing fever. (Spirochetal).	Kala-azar.	Influenza.	Other fevers.	Dysentery.	Diarrhœa.	Pneumonia.	Pulmonary tuberculosis.	Other respiratory diseases.	Injuries including suicide.	Deaths from child-birth.	Other causes.	Total of all causes.			Total of corresponding week of the previous year.		
																											Male.	Female.	Total.	Male.	Female.	Total.
Calcutta ..	1	Calcutta ..	778,817	362,045	1,140,862	515	72	4	8	..	5	10	32	3	..	5	6	16	37	12	81	68	38	9	5	254	314	279	593	322	210	532
Burdwan ..	2	Asansol Mining Settlement.	209,544	173,136	382,680	196	1	3	4	..	..	..	..	..	..	..	..	30	3	..	7	1	7	4	1	42	50	52	102	80	82	162
Howrah ..	3	Howrah ..	145,120	79,758	224,878	151	8	2	..	..	..	..	5	1	..	1	..	..	3	9	10	10	22	2	..	41	57	49	106	62	54	116
Dacca ..	4	Dacca ..	79,365	59,153	138,518	55	5	..	..	..	..	..	2	..	..	1	..	9	3	4	5	1	4	..	..	28	26	31	57	40	25	65
24-Parganas	5	Bhatpara ..	60,134	24,841	84,975	34	2	..	..	..	..	1	..	1	..	..	..	19	..	5	3	5	1	..	..	12	22	25	47	10	13	23
	6	Garden Reach	36,131	19,741	55,872	Return not received.																								7	6	13
Chittagong ..	7	Chittagong ..	35,049	18,107	53,156	28	..	..	..	..	..	..	..	..	..	3	..	4	1	..	3	1	2	2	..	6	11	11	22	8	6	14

Calcutta, the 21st August 1936.

A. C. CHATTERJI, M.B., D.P.H., MAJOR, I.M.S., *Director of Public Health, Bengal.*

Vital statistics of towns with a population of 50,000 and over of the Bengal Presidency for the week ending Saturday, the 15th August 1936.

Districts.	Nos.	Towns.	Population under registration according to census of 1931.			Births registered.		Deaths registered.																							
			Male.	Female.	Total.	Number registered (excluding still-births).	Still-births registered.	Cholera.	Small-pox.	Plague.	Cerebro-spinal meningitis.	Malaria.	Enteric fever.	Measles.	Relapsing fever. (Spirochætal).	Kala-azar.	Influenza.	Other fevers.	Dysentery.	Diarrhœa.	Pneumonia.	Pulmonary Tuberculosis.	Other respiratory diseases.	Injuries including suicide.	Deaths from child-birth.	Other causes.	Total of all causes.			Total of corresponding week of the previous year.		
																										Male.	Female.	Total.	Male.	Female.	Total.
Calcutta ..	1	Calcutta ..	778,817	362,045	1,140,862	492	74	5	7	..	4	9	34	1	..	4	7	20	52	8	76	64	42	22	1	252	323	285	608	287	296	583
Burdwan ..	2	Asansol Mining Settlement.	209,544	173,136	382,680	304	4	10	..	..	..	3	4	..	..	..	1	77	5	..	14	4	7	6	3	54	106	82	188	71	57	128
Howrah ..	3	Howrah ..	145,120	79,753	224,873	141	9	2	2	..	..	1	7	..	..	..	..	1	13	5	5	4	17	2	..	43	52	50	102	83	64	147
Dacca ..	4	Dacca ..	79,365	59,153	138,518	67	11	..	1	..	..	..	3	..	..	1	..	1	5	2	7	2	1	..	1	35	28	31	59	42	27	69
24-Parganas	5	Bhatpara ..	60,134	24,841	84,975	29	3	1	..	..	..	..	2	..	..	..	..	13	3	2	1	1	..	..	..	8	17	14	31	17	14	31
	6	Garden Reach.	36,131	19,741	55,872	17	..	..	..	..	..	3	..	..	..	..	..	4	3	1	1	..	3	..	..	2	9	8	17	5	7	12
Chittagong ..	7	Chittagong.	35,049	18,107	53,156	21	1	..	..	..	..	..	1	..	..	..	..	3	3	..	..	1	..	..	..	7	10	5	15	10	5	15

Calcutta, the 21st August 1936.

A. C. CHATTERJI, M.B., D.P.H., MAJOR, I.M.S., *Director of Public Health, Bengal.*

Printed and published by the Superintendent, Government Printing, Bengal Government Press, Alipore, Bengal, on the 27th August 1936.

Registered No. C207

No. 36 of 1936 — 23.9.36

The Calcutta Gazette

Published by Authority

THURSDAY, SEPTEMBER 3, 1936.

CONTENTS:

	Page.
PART I.—Orders and Notifications by the Governor of Bengal, the Government of Bengal, the High Court, Government Treasury, etc.	2051—2104
PART IA.—Orders and Notifications by the Government of India republished for general information	233 238
PART IB.—Educational Notices ..	1361—1394
PART II.—Advertisements ..	827—886
PART III.—Acts of the Bengal Legislative Council	*Nil*
PART IV.—Bills introduced in the Bengal Legislative Council, Reports of Select Committees presented or to be presented to that Council, and Bills published before introduction in that Council ..	*Nil*
PART V.—Acts of the Indian Legislature assented to by the Governor-General and Ordinances promulgated under section 72 of the Government of India Act ..	*Nil*
PART VI.—Bills introduced in the Council of State and Legislative Assembly, Reports of Select Committees presented to the Council and Assembly and Bills published under rule 18 of the Indian Legislative Rules—	
The Indian Motor Vehicles (Amendment) Bill, 1936, with Statement of Objects and Reasons and Notes on Clauses	135- 140
SUPPLEMENT No. 36 :—	
Weekly Gauge Readings—Daily Rainfall —Cotton Ginning and Pressing - Weekly Vital Statistics, Weekly Weather and Crop Report ..	1173—1196

PART I

Orders and Notifications by the Governor of Bengal, the Government of Bengal, the High Court, Government Treasury, etc.

Orders by the Government of Bengal.

No 10090A

Appointments and Transfers.

GENERAL

Burdwan - Jessore.—No. 9642 A.—25th August 1936.—Mr. Viresh Chandra Dutta, Deputy Magistrate and Deputy Collector, Burdwan, is transferred to the headquarters station of the Jessore district.

Burdwan - 24-Parganas - Faridpur.—No. 9646A.—25th August 1936.—Maulvi Faizal Huq, Deputy Magistrate and Deputy Collector, Katwa, Burdwan, is transferred to the headquarters station of the 24-Parganas district.

This cancels the orders of the 12th August 1936 transferring him to the headquarters station of the Faridpur district.

Pabna - Faridpur - Midnapore - Bakarganj-Mymensingh.—No. 9655A.—25th August 1936.—The officers named below who have, under the orders of the 19th August 1936, been appointed to be Deputy Magistrates and Deputy Collectors, on probation, are posted to the headquarters station of the districts mentioned opposite their names:—

(1) Babu Khagendra Nath Mitra (Serajganj, Pabna)—Faridpur.
(2) Maulvi Khurshed Ali (Midnapore)—Bakarganj.
(3) Babu Jatindra Kumar Mazumdar (on leave)—Mymensingh.

Dinajpur-Dacca.—No. 9662A.—25th August 1936.—The officer named below who has, under the orders of the 19th August 1936, been appointed to be a Deputy Magistrate and Deputy Collector, on probation, is posted to the headquarters station of the district mentioned opposite his name:—

Babu Surendra Nath Roy (Dinajpur)—Dacca.

Darjeeling-Jessore.—No. 9667A.—25th August 1936.—The officer named below who has, under the orders of the 19th August 1936, been appointed to be a Deputy Magistrate and Deputy Collector, on probation, is posted to the headquarters station of the district mentioned opposite his name:—

Maulvi Muhammad Fazlur Rahman (Darjeeling)—Jessore.

Midnapore-Birbhum.—No. 9774A.—25th August 1936.—The officer named below who has, under the orders of the 19th August 1936, been appointed to be a Deputy Magistrate and Deputy Collector, on probation, is posted to the headquarters station of the district mentioned opposite his name:—

Babu Dhirendra Nath Banarji (Midnapore)—Birbhum.

Rajshahi.—No. 9779A.—25th August 1936.—Mr. T. M. Dow, I.C.S., on leave, is appointed to be Magistrate and Collector, Rajshahi.

Presidency-Divn.—No. 9822A.—26th August 1936.—Babu Mahendra Nath Chaudhuri, Sub-Deputy Collector, on leave, is posted to the Presidency Division.

Chittagong Divn.—No. 9826A.—26th August 1936.—Babu Heramba Nath Bhattacharji, Sub-Deputy Collector, on leave, is posted to the Chittagong Division.

Mymensingh-Noakhali.—No. 9835A.—26th August 1936.—The officer named below who has, under the orders of the 19th August 1936, been appointed to be a Deputy Magistrate and Deputy Collector, on probation, is posted to the headquarters station of the district mentioned opposite his name:—

Babu Pramod Lal Dhar (Mymensingh)—Noakhali.

E. N. BLANDY,
Chief Secy. to the Govt. of Bengal (offg.).

Calcutta.—No. 10003A.—27th August 1936.—Mr. R. L. Walker, I.C.S., officiating Additional Deputy Secretary to the Government of Bengal in the Finance, Commerce, and Marine Departments and officiating Labour Commissioner, Bengal, is appointed temporarily to act as Secretary to the Government of Bengal in the Finance, Commerce and Marine Departments.

S. BASU,
Dy. Secy. to the Govt. of Bengal.

Jessore-Khulna.—No. 9916A.—28th August 1936.—Babu Birendra Kishore Kar, Sub-Deputy Collector, Narail, Jessore, is transferred to the Satkhira subdivision of the Khulna district.

Rajshahi — Malda — 24-Parganas.—No. 9960A.—29th August 1936.—Mr. S. K. Gupta, I.C.S., officiating District and Sessions Judge, Rajshahi and Malda, is appointed to act, until further orders, as an Additional District and Sessions Judge, 24-Parganas.

Rangpur-Tippera-Chittagong.—No. 9993A.—29th August 1936.—Babu Sarat Chandra De, Subordinate Judge and Assistant Sessions Judge, Rangpur, is appointed temporarily to act as Additional District and Sessions Judge, Tippera and Chittagong.

This cancels notification No. 7246A., dated the 15th August 1936, appointing Babu Abani Prasad Neogi, officiating Additional District and Sessions Judge, Howrah, to act as Additional District and Sessions Judge, Tippera and Chittagong.

Bankura - Burdwan - Birbhum - Midnapore Hooghly-Howrah.—No. 9965A.—29th August 1936.—Mr. S. K. Ganguli, District and Sessions Judge, Bankura, is appointed to act, in addition to his own duties, as Additional Sessions Judge of Burdwan, Birbhum, Midnapore, Hooghly and Howrah during a portion of the ensuing civil court vacation, viz., from the 14th October to the 30th October 1936, inclusive.

He is authorised, under section 193 of the Code of Criminal Procedure, to receive and dispose of all criminal applications and cases, except applications for revision under section 435 of the Code, during the absence, on vacation leave, of Messrs. M. H. B. Lethbridge, I.C.S., B. K. Guha, I.C.S., S. K. Haldar, I.C.S., S. Sen, I.C.S., and S. N. Guha Ray, I.C.S.

Mr. Ganguli is also authorised, under section 9(4) of the Code of Criminal Procedure, during the ensuing civil court vacation, to sit at Bankura, Burdwan, Suri, Midnapore, Chinsura or at Howrah for the disposal of cases arising in any of these districts.

Hooghly-Burdwan-Bankura-Birbhum-Midnapore-Howrah.—No. 9967A.—29th August 1936.—Mr. S. Sen, I.C.S., District and Sessions Judge, Hooghly, is appointed to act, in addition to his own duties, as Additional

Sessions Judge of Burdwan, Bankura, Birbhum, Midnapore and Howrah, during a portion of the ensuing civil court vacation, viz., from the 31st October to the 16th November 1936, inclusive.

He is authorised, under section 193 of the Code of Criminal Procedure, to receive and dispose of all criminal applications and cases, except applications for revision under section 435 of the Code, during the absence, on vacation leave, of Messrs. M. H. B. Lethbridge, I.C.S., S. K. Ganguli, B. K. Guha, I.C.S., S. K. Haldar, I.C.S., and S. N. Guha Roy, I.C.S.

Mr. Sen is also authorised, under section 9(*4*) of the Code of Criminal Procedure, during the ensuing civil court vacation, to sit at Chinsura, Burdwan, Bankura, Suri, Midnapore or at Howrah for the disposal of cases arising in any of these districts.

24-Parganas-Nadia - Murshidabad - Jessore-Khulna.—No. 9969A.—29th August 1936.—Mr. S. K. Gupta, I.C.S., officiating Additional District and Sessions Judge, 24-Parganas, is appointed to act, in addition to his own duties, as Additional Sessions Judge of Nadia, Murshidabad, Jessore and Khulna, during the ensuing civil court vacation.

He is authorised, under section 193 of the Code of Criminal Procedure, to receive and dispose of all criminal applications and cases, except applications for revision under section 435 of the Code, during the absence, on vacation leave, of Messrs. A. M. Ahmad, K. C. Nag, M.B.E., and S. Mukharji.

Mr. Gupta is also authorised, under section 9(*4*) of the Code of Criminal Procedure, during the ensuing civil court vacation, to sit at Alipore, Krishnagar, Berhampore, Jessore or at Khulna for the disposal of cases arising in any of these districts.

Faridpur-Dacca-Mymensingh-Bakarganj.—No. 9971A.—29th August 1936.—Mr. Kunja Bihari Ray, District and Sessions Judge, Faridpur, is appointed to act, in addition to his own duties, as Additional Sessions Judge of Dacca, Mymensingh and Bakarganj, during the ensuing civil court vacation.

He is authorised, under section 193 of the Code of Criminal Procedure, to receive and dispose of all criminal applications and cases, except applications for revision under section 435 of the Code, during the absence, on vacation leave, of Messrs. W. McC. Sharpe, I.C.S., S. M. Masih and A. N. Sen.

Mr. Ray is also authorised, under section 9(*4*) of the Code of Criminal Procedure, during the ensuing civil court vacation, to sit at Faridpur, Dacca, Mymensingh or at Barisal for the disposal of cases arising in any of these districts.

Dinajpur-Jalpaiguri-Darjeeling - Rangpur - Pabna-Bogra-Rajshahi-Malda.—No. 9973A—29th August 1936.—Mr. A. D. Khan, I.C.S., officiating District and Sessions Judge, Dinajpur, Jalpaiguri and Darjeeling, is appointed to act, in addition to his own duties, as Additional Sessions Judge of Rangpur, Pabna-Bogra and Rajshahi-Malda, during the ensuing civil court vacation.

He is authorised, under section 193 of the Code of Criminal Procedure, to receive and dispose of all criminal applications and cases except applications for revision under section 435 of the Code, during the absence, on vacation leave, of Messrs. P. C. De, I.C.S., S. N. Modak, I.C.S., and A. F. M. Rahman, I.C.S.

Mr. Khan is also authorised, under section 9(*4*) of the Code of Criminal Procedure, during the ensuing civil court vacation, to sit at Dinajpur, Jalpaiguri, Darjeeling, Rangpur, Pabna, Bogra, Rampur-Boalia or at Malda for the disposal of cases arising in any of these districts.

Noakhali-Tippera-Chittagong.—No. 9975A.—29th August 1936.—Mr. Naranath Mukharji, District and Sessions Judge, Noakhali, is appointed to act, in addition to his own duties, as Additional Sessions Judge of Tippera and Chittagong, during the ensuing civil court vacation.

He is authorised, under section 193 of the Code of Criminal Procedure, to receive and dispose of all criminal applications and cases except applications for revision under section 435 of the Code, during the absence, on vacation leave, of Mr. H. G. Waight, I.C.S.

Mr. Mukharji is also authorised, under section 9(*4*) of the Code of Criminal Procedure, during the ensuing civil court vacation, to sit at Noakhali, Comilla or at Chittagong for the disposal of cases arising in any of these districts.

24-Parganas.—No. 9977A.—29th August 1936.—Mr. S. K. Gupta, I.C.S., officiating Additional District and Sessions Judge, 24-Parganas, is authorised, under section 193 of the Code of Criminal Procedure, to receive and dispose of all criminal applications and cases except applications for revision under section 435 of the Code, during the ensuing civil court vacation.

Khulna-24-Parganas.—No. 9982A.—29th August 1936.—Babu Bishnupada Bhattacharji, Deputy Magistrate and Deputy Collector, Bagerhat, Khulna, is appointed to have charge of the Diamond Harbour subdivision of the 24-Parganas district.

Pabna-Khulna.—No. 9986A.—29th August 1936.—Babu Sudhindra Kumar Sanyal, Deputy Magistrate and Deputy Collector, Pabna, is appointed to have charge of the Bagerhat subdivision of the Khulna district.

Chittagong-Midnapore.—No. 10015A.—29th August 1936.—Babu Surendra Nath Sarkar, Deputy Magistrate and Deputy Collector, Chittagong, is appointed to have charge of the Ghatal subdivision of the Midnapore district.

Tippera-Chittagong.—No. 10019A.—29th August 1936.—Babu Gadadhar Singh Roy, Sub-Deputy Collector, Tippera, who has, under the orders of the 19th August 1936, been appointed to be a Deputy Magistrate and Deputy Collector, on probation, is posted to the headquarters station of the Chittagong district.

ECCLESIASTICAL.

Calcutta.—No. 9813A.—26th August 1936.—The Reverend Ernest Joseph Young, officiating Archdeacon of Calcutta, is appointed to be Archdeacon of Calcutta, with effect from the 19th September 1936, *vice* the Ven'ble O. W. Birch, resigned from the Indian Ecclesiastical Establishment.

E. N. BLANDY,

Chief Secy. to the Govt. of Bengal (offg.).

Leave.

GENERAL.

Calcutta.—No. 9617A.—25th August 1936.—Mr. G. P. Hogg, C.S.I., C.I.E., I.C.S., Chief Secretary to the Government of Bengal, is allowed leave for five months and three days, viz., leave on average pay for one month and twelve days, under rule 81 (*b*) (*i*) of the Fundamental Rules, with effect from the 28th August 1936, and leave on half average pay for the remaining period, under rule 81 (*d*) of those Rules.

S. BASU,

Dy. Secy. to the Govt. of Bengal.

Noakhali.—No. 9783A.—25th August 1936.—Maulvi Abu Muhammad Hosamuddin Haidar, Deputy Magistrate and Deputy Collector, Noakhali, is allowed leave on average pay for four months, under rule 81 (*b*) (*ii*) of the Fundamental Rules, with effect from the 5th September 1936 or any subsequent date on which he may be relieved.

Bakarganj. — No. 9785A. — 25th August 1936.—Maulvi Azizur Rahman Khalifa, Deputy Magistrate and Deputy Collector, Bakarganj, is allowed leave on average pay up to the 17th October 1936, under rule 81 (*b*) (*ii*) of the Fundamental Rules, with effect from the date on which he may be relieved.

Dacca.—No. 9796A.—25th August 1936.—Babu Dwarka Nath Das, Sub-Deputy Collector, Dacca, is allowed leave up to the 16th August 1936, in extension of the leave granted to him under the orders of the 10th July 1936, viz., leave on average pay for twenty-six days, under rule 81 (*b*) (*ii*) of the Fundamental Rules, and leave on half average pay for the remaining period, under rule 81 (*d*) of those Rules.

Jalpaiguri.—No. 9799A. — 25th August 1936.—Babu Byomkesh Sen Gupta, Deputy Magistrate and Deputy Collector, Jalpaiguri, is allowed earned leave for twenty days, under rule 10 of the Bengal Services (Revision of Leave) Rules, 1934, with effect from the 28th September 1936.

Bankura.—No. 9930A.—28th August 1936.—Rai Sahib Phani Bhushan Mitra, Deputy Magistrate and Deputy Collector, Bankura, is allowed leave on average pay up to the 31st August 1936, under rule 81(*b*) (*ii*) of the Fundamental Rules, with effect from the 4th August 1936.

24-Parganas.—No. 9934A.—28th August 1936.—Babu Hari Charan Banarji, Sub-Deputy Collector, Barrackpore, 24-Parganas, is allowed leave on average pay, under rule 81(*b*) (*ii*) of the Fundamental Rules, from the 1st October 1936 to the 5th January 1937, inclusive.

Hooghly.—No. 9979A.—29th August 1936.—The orders of the 2nd January 1936, granting leave not due on half average pay for five days to Mr. Mriganka Mauli Basu, I.C.S., Assistant Magistrate and Collector, Hooghly, are cancelled.

POLICE.

Mymensingh.—No. 9803A.—25th August 1936.—Mr. Ajit Kumar Mazumdar, I.P., Assistant Superintendent of Police, Tangail, Mymensingh, is allowed leave on average pay for twenty-one days, under rule 81(*b*) (*ii*) of the Fundamental Rules, with effect from the 12th August 1936 or any subsequent date on which he may avail himself of it.

E. N. BLANDY,

Chief Secy. to the Govt. of Bengal (offg.).

NOTIFICATIONS.

No. 9625A.—25th August 1936.—The following amendment is made in the schedule of posts included in the Bengal General Service constituted under Government notification No. 1665 A., dated the 14th February 1936:—

Delete the sign ‡ before item 97—"Deputy Director of Sericulture, Bengal", and also the footnote appertaining thereto, viz., "‡ when not held by a member of the Indian Agricultural Service".

E. N. BLANDY,

Chief Secy. to the Govt. of Bengal (offg.).

Calcutta.—No. 10000A.—27th August 1936.—Mr. E. N. Blandy, C.I.E., I.C.S., Secretary to the Government of Bengal in the Finance, Commerce and Marine Departments, is appointed temporarily to act as Chief Secretary to the Government of Bengal.

S. BASU,
Dy. Secy. to the Govt. of Bengal.

POLITICAL DEPARTMENT.

Political.

NOTIFICATIONS.

Calcutta, — No. 13746P. — 29th August 1936.—Whereas the Governor in Council is satisfied that by reason of a movement subversive of law and order a state of emergency has arisen in the town of Calcutta, as defined in the Calcutta Police Act, 1866, together with the suburbs of Calcutta as defined by notification under section 1 of the Calcutta Suburban Police Act, 1866, of such a kind that the existing powers of Government are inadequate for the maintenance of the public security;

Now, therefore, in exercise of the power conferred by sub-section (*4*) of section 1 of the Bengal Public Security Act, 1932 (Ben. Act XXII of 1932), the Governor in Council is pleased to direct that all the provisions of Chapters II and III of the said Act shall come into force in the said area on the 3rd September 1936.

24-Parganas.—No. 13747P.—29th August 1936.—Whereas the Governor in Council is satisfied that by reason of a movement subversive of law and order a state of emergency has arisen in the district of the 24-Parganas of such a kind that the existing powers of Government are inadequate for the maintenance of the public security;

Now, therefore, in exercise of the power conferred by sub-section (*4*) of section 1 of the Bengal Public Security Act, 1932 (Ben. Act XXII of 1932), the Governor in Council is pleased to direct that all the provisions of Chapters II and III of the said Act shall come into force in the said area on the 3rd September 1936.

Howrah.—No. 13748P.—29th August 1936.—Whereas the Governor in Council is satisfied by reason of a movement subversive of law and order a state of emergency has arisen in the district of Howrah of such a kind that the existing powers of Government are inadequate for the maintenance of the public security;

Now, therefore, in exercise of the power conferred by sub-section (*4*) of section 1 of the Bengal Public Security Act, 1932 (Ben. Act XXII of 1932), the Governor in Council is pleased to direct that all the provisions of Chapters II and III of the said Act shall come into force in the said area on the 3rd September 1936.

Darjeeling.—No. 13723P.—28th August 1936.—In pursuance of section 61 of the Cantonments Act, 1924 (II of 1924), the Governor in Council is pleased to give notice of his intention to impose under section 60 of the said Act a tax on the trades and professions carried on by the following classes of persons within the limits of Jalapahar Cantonment according to the rates laid down in the table given below. The said tax shall be payable annually by every such person:—

	Classes of persons carrying on trades, etc.	Fees per annum.
		Rs.
1.	Retail shop-keepers in bazar area ...	5
2.	Wholesale and retail shop-keepers in bazar area ...	10
3.	Washermen ...	2
4.	Fortune tellers ...	2
5.	Tailors and shoe makers ...	2
6.	Photographers ...	5
7.	Tatoo wallah ...	5
8.	Pedlar, vendor of goods in boxes, hawkers or box wallah ...	2
9.	Dyer or cleaners ...	5
10.	Itinerant dealer hawking goods for sale in basket and tray ...	1
11.	Owner of any rickshaw, pony, dandies which is let out on hire ...	2

II. Any objections or suggestions with regard to the said proposal which may be received by the undersigned through the Cantonment Authority, Jalapahar, from any inhabitant of the said Cantonment within thirty days from the date of this notification will be considered by the Local Government.

E. N. BLANDY,
Chief Secy. to the Govt. of Bengal (offg.).

Special.

NOTIFICATION.

No. 29639X.—3rd September 1936.—Whereas in the opinion of the Government of Bengal there are reasonable grounds for believing that Babu Anil Das *alias* Renu, son of Babu Annada Charan Das, of village Panchgaon, police-station Rajanagar, in the district of Sylhet, and of 54, Channighat, Dacca town, is a person in respect of whom an order may lawfully be made under sub-section (*1*) of section 2 of the Bengal Criminal Law Amendment Act, 1930; and

Whereas the Governor in Council on the 7th August 1936 in exercise of the powers conferred by the said section 2 was pleased to order the said Babu Anil Das *alias* Renu to be committed to custody in the nearest District or Central Jail, and the arrest without warrant of the said Babu Anil Das *alias* Renu at any place where he might be found by any police officer with a view to his commitment to custody; and

Whereas the said Babu Anil Das *alias* Renu has not been arrested and the said order under section 2 of the said Act has not been served personally on the said person, and whereas due diligence has in the opinion of the Local Government been exercised to effect such personal service;

Now, therefore, the Governor in Council in exercise of the powers conferred by sub-section (*2*) of section 3 of the Bengal Criminal Law Amendment Act, 1930, is pleased to direct the said Babu Anil Das *alias* Renu, son of Babu Annada Charan Das, of village Panchgaon, police-station Rajanagar, in the district of Sylhet, and of 54, Channighat, Dacca town, to appear before the Additional Superintendent of Police, Dacca, at Dacca town, within fifteen days of this date for the purpose of receiving the aforesaid order.

J. R. BLAIR,

Addl. Secy. to the Govt. of Bengal.

POLICE DEPARTMENT.

Orders by the Inspector-General of Police, Bengal.

Calcutta.—No. 9378A.—27th August 1936. —**Burdwan.**—Maulvi Abdul Halim Khan, probationary Court Inspector, Burdwan, is confirmed in his appointment with effect from the 28th August 1936.

J. C. FARMER,

Inspector-General of Police (offg).

JUDICIAL DEPARTMENT.

No. 10091A.

Powers.

Dacca-Midnapore. — No. 9620A. — 25th August 1936.—The Joint Magistrates and Deputy Collectors named below are vested with the powers of a Subordinate Judge within the districts noted against their names:—

Mr. W. J. Palmer, I.C.S., Dacca.
Mr. A. K. Ghosh, I.C.S., Midnapore.

Dacca - Faridpur - Jessore - Noakhali-Hooghly-Mymensingh-Birbhum.—No. 9816A. —26th August 1936.—The Deputy Magistrates on probation, named below are vested with the powers of a Magistrate of the first class:—

(1) Babu Pramod Lal Dhar, Noakhali.
(2) Babu Khagendra Nath Mitra, Faridpur.
(3) Maulvi Muhammad Fazlur Rahman, Jessore.
(4) Babu Surendra Nath Roy, Dacca.
(5) Babu Purna Chandra Sen, Madaripur, Faridpur.
(6) Babu Jatindra Kumar Mazumdar, Mymensingh.
(7) Babu Dhirendra Nath Banarji, Birbhum.

Chittagong.—No. 10028A. — 31st August 1936.—Babu Gadadhar Singh Roy, Deputy Magistrate on probation, Chittagong, is vested with the powers of a Magistrate of the first class.

Bakarganj.—No. 10030A. — 31st August 1936.—Maulvi Khurshed Ali, Deputy Magistrate on probation, Bakarganj, is vested with the powers of a Magistrate of the second class.

E. N. BLANDY,

Chief Secy. to the Govt. of Bengal (offg.).

Appointments and Transfers.

Birbhum.—No. 6470J.—26th August 1936. —Babu Subodh Chandra Mukharji, munsif of Rampurhat, in the district of Birbhum, is appointed to be a munsif in the said district, to be ordinarily stationed at Dubrajpur, *vice* Babu Gouripada Mukharjji, granted leave.

Tippera-Mymensingh.—No. 6476J. —26th August 1936.—Babu Sushil Chandra Mukharji, probationary munsif, now employed as a munsif at Nabinagar, in the district of Tippera, is appointed to be a munsif, in the district of Mymensingh, to be ordinarily stationed at Netrokona, during the absence, on leave, of Babu Achintya Kumar Sen Gupta.

Hooghly.—No. 6564J.—28th August 1936.—In exercise of the powers conferred by sections 14 and 15 and the proviso to section 357 of the Code of Criminal Procedure, 1898 (Act V of 1898), the Governor in Council is pleased—

(*a*) to confer upon Babu Atul Chandra Banarji, the powers of a Magistrate of the third class, in the district of Hooghly, for a period of three years from the 14th September 1936,

(*b*) to direct him to sit as a member of the Bhadreswar bench in the said district, and

(*c*) to direct him to take down evidence in the English language.

Burdwan.—No. 6572J.—28th August 1936.—In exercise of the powers conferred by sections 14 and 15 and the proviso to section 357 of the Code of Criminal Procedure, 1898 (Act V of 1898), the Governor in Council is pleased—

(*a*) to confer upon Mr. Saileswar Singh Roy the powers of a Magistrate of the second class, in the district of Burdwan, for a period of three years from the 9th September 1936, in respect to such cases as may be made over to him within the limits of the Sadar subdivision of the said district,

(*b*) to direct that he shall, in addition to sitting singly, sit as a member of the Sadar bench in the said district, and

(*c*) to direct him to take down evidence in the English language.

Leave.

Birbhum.—No. 6583J.—6th August 1936.—Babu Gauripada Mukharji, munsif of Dubrajpur, in the district of Birbhum, is allowed leave on average pay for six weeks, under rules 81(*b*)(*ii*) and 82(*b*) of the Fundamental Rules, with effect from the 2nd September 1936. He is also permitted to affix the civil court vacation of 1936 to the leave, under rule 82 (*d*) of those rules.

Hooghly.—No. 6584J.—7th August 1936.—Babu Prabodh Chandra Ghosh, munsif of Arambagh, in the district of Hooghly, is allowed leave on average pay for the period from the 2nd July to the 1st August 1936, under rules 81(*b*)(*ii*) and 82(*b*) of the Fundamental Rules.

No. 6585J.—7th August 1936.—Babu Jogindra Kumar De, munsif, is allowed leave on average pay, on medical certificate, for two months, under the proviso to rule 81(*b*)(*ii*) of the Fundamental Rules, in extension of the leave granted to him under the orders of the 26th February 1936.

Tippera.—No. 6586J.—8th August 1936.—Mr. Satish Chandra Bagchi, munsif of Chandpur, in the district of Tippera, is allowed leave on average pay, for three days, under rules 81 (*b*) (*ii*) and 82 (*b*) of the Fundamental Rules, in extension of the leave granted to him under the orders of the 10th July 1936.

Birbhum.—No. 6587J.—11th August 1936.—Maulvi Syed Alla Hafez, munsif of Rampurhat, in the district of Birbhum, is allowed leave on average pay, on medical certificate, for three months, under the proviso to rule 81(*b*)(*ii*) of the Fundamental Rules, with effect from the 4th June 1936.

Hooghly.—No. 6588J.—12th August 1936.—Babu Prabodh Chandra Ghosh, munsif of Arambagh, in the district of Hooghly, is allowed leave for the period from the 2nd August to the 13th October 1936, viz., leave on average pay, for one month and twenty-seven days, under rules 81(*b*)(*ii*) and 82(*b*) of the Fundamental Rules and leave on half average pay for the remaining period, under rule 81(*d*) of those rules, in extension of the leave granted to him under the orders of the 7th August 1936. He is also permitted to affix the civil court vacation of 1936 to the leave, under rule 82 (*d*) of those rules.

Bakarganj.—No. 6589J.—15th August 1936.—Maulvi Amiruddin Sarkar, additional munsif of Pirojpur, in the district of Bakarganj, is allowed leave on average pay, for the period from the 3rd August to the 12th September 1936, under rules 81(*b*)(*ii*) and 82(*b*) of the Fundamental Rules.

Bakarganj.—No. 6590J. — 18th August 1936.—Maulvi Abul Quasem, munsif of Patuakhali, in the district of Bakarganj, is allowed earned leave for the period from the 24th July to the 19th August 1936, under rules 10 and 14(*a*) of the Bengal Services (Revision of Leave) Rules, 1934.

Rangpur.—No. 6591J.—18th August 1936.—Babu Shib Chandra Datta, munsif of Kurigaon, in the district of Rangpur, is allowed leave on average pay, for the period from the 2nd to the 22nd August 1936, under rules 81(*b*)(*ii*) and 82(*b*) of the Fundamental Rules, in extension of the leave granted to him, under the orders of the 10th July 1936.

Jessore.—No. 6592J.—19th August 1936.—Maulvi Mahatabuddin Ahmed, munsif of Jessore (Sadar), is allowed leave on average pay, for the period from the 15th September to the 13th October 1936, under rules 81(*b*)(*ii*) and 82(*b*) of the Fundamental Rules. He is also permitted to affix the civil court vacation of 1936 to the leave, under rule 82(*d*) of those rules.

24-Parganas.—No. 6593J.—19th August 1936.—Babu Sailendra Nath Chatarji, munsif of Sealdah, in the district of the 24-Parganas, is allowed leave on average pay, for fourteen days, under rules 81 (*b*) (*ii*) and 82 (*b*) of the Fundamental Rules, with effect from the 6th August 1936.

Tippera.—No. 6594J.—19th August 1936.—Babu Somnath Chakrabatti, munsif of Brahmanbaria, in the district of Tippera, is allowed leave on average pay, for twelve days, under rules 81(*b*)(*ii*) and 82(*b*) of the Fundamental Rules, with effect from the 2nd October 1936. He is also permitted to affix the civil court vacation of 1936 to the leave, under rule 82(*d*) of those rules.

Resignation.

Mymensingh.—No. 6566J.—28th August 1936.—The Governor in Council is pleased to accept the resignation tendered by Khan Sahib Khundkar Saidur Rahman of his appointment as an Honorary Magistrate of the Jamalpur bench in the district of Mymensingh.

Promotions and Confirmations.

No. 6575J.—29th August 1936.—In partial modification of the orders contained in this department notification No. 5699J., dated the 24th July 1936, the following promotions and confirmations are sanctioned in the Bengal Civil Service (Judicial):—

Promoted to the Selection Grade on Rs. 1,200.

Babu Gajanan Banarji, a Subordinate Judge and Assistant Sessions Judge, now acting as Additional District and Sessions Judge, Faridpur, with effect from the 1st March 1936, *vice* Mr. Phanindra Nath Mitra, confirmed as a District and Sessions Judge.

Promoted to the Selection Grade of Subordinate Judges on Rs. 1,000.

Babu Subodh Chandra Datta, a Subordinate Judge and Assistant Sessions Judge, now acting as Additional District and Sessions Judge, Mymensingh, with effect from the 1st March 1936, *vice* Babu Gajanan Banarji, promoted.

Confirmed in the grade of Subordinate Judges below the Selection Grade.

Babu Banku Bihari Chatarji, officiating Additional Subordinate Judge and Assistant Sessions Judge, Nadia, with effect from the 1st March 1936, *vice* Babu Subodh Chandra Datta, promoted.

Babu Dhirendra Nath Guha, officiating Subordinate Judge and Assistant Sessions Judge, Howrah, with effect from the 16th June 1936, *vice* Babu Suresh Chandra Sen, No. 1, retired.

Babu Tej Chandra Mukharji, officiating Subordinate Judge and Assistant Sessions Judge, 24-Parganas, with effect from the 16th June 1936, *vice* Babu Jamini Kishor Ray, retired.

Powers.

24-Parganas.—No. 6448J.—25th August 1936.—In exercise of the powers conferred by sections 14 and 15 of the Code of Criminal Procedure, 1898 (Act V of 1898), the Governor in Council is pleased—

(*a*) to confer upon Mr. David Dunn Frier the powers of a Magistrate of the third class, in the district of the 24-Parganas, for a period of three years from the date of this notification, and

(*b*) to direct him to sit as a member of the Naihati bench in the said district.

24-Parganas.—No. 6451J.—25th August 1936.—In exercise of the powers conferred by sections 14 and 15 of the Code of Criminal Procedure, 1898 (Act V of 1898), the Governor in Council is pleased—

(*a*) to confer upon Babu Banwari Lal Dhole the powers of a Magistrate of the third class, in the district of the 24-Parganas for a period of three years from the 26th September 1936, and

(*b*) to direct him to sit as a member of the Baranagar bench in the said district.

Burdwan.—No. 6495J.—27th August 1936.—In exercise of the power conferred by the proviso to section 357 of the Code of Criminal Procedure, 1898 (Act V of 1898), the Governor in Council is pleased to direct Babu Dinabandhu Tewari, Honorary Magistrate of the Sadar bench, in the district of Burdwan, to take down evidence in the English language.

Birbhum.—No. 6501J.—27th August 1936.—Babu Subodh Chandra Mukharji, munsif, under orders of transfer to Dubrajpur, in the district of Birbhum, is vested with powers to exercise final jurisdiction in the trial of suits for the recovery of rent under section 153(*b*) of the Bengal Tenancy Act, VIII of 1885.

NOTIFICATIONS.

Calcutta.—No. 6445J.—25th August 1936.—Under rule 4(*3*) of the rules regarding the management and discipline of the House of Detention in Calcutta published with notification No. 8033J., dated the 12th December 1923, the Governor in Council is pleased to reappoint Khan Bahadur A. F. M. Abdul Ali to be a member of the Visiting Board for the control and management of the House of Detention, Calcutta, for a period of two years from the 16th August 1936.

Jalpaiguri.—No. 6492J.—27th August 1936.—In exercise of the power conferred by section 65 of the Bengal Village Self-Government Act, 1919 (Bengal Act V of 1919), the Governor in Council is pleased to appoint Babu Ram Mohan Barman a member of the Panikauri union board within the Rajganj police-station in the Sadar subdivision of the Jalpaiguri district to be, during his term of office as such member, a member of the union bench within the jurisdiction of the said union board for the purposes of that section, *vice* Maulvi Jaharali Ahamad, deceased.

Jalpaiguri.—No. 6493J.—27th August 1936.—In exercise of the power conferred by section 73 of the Bengal Village Self-Government Act, 1919 (Bengal Act V of 1919), the Governor in Council is pleased to appoint Babu Ram Mohan Barman a member of the Panikauri union board within the Rajganj police-station in the Sadar subdivision of the Jalpaiguri district to be, during his term of office as such member, a member of the union court within the jurisdiction of the said union board for the purposes of that section, *vice* Maulvi Jaharali Ahamad, deceased.

N. G. A. EDGLEY,
Secy. to the Govt. of Bengal.

LOCAL SELF-GOVERNMENT DEPARTMENT.

NOTIFICATIONS.

Minister-in-charge: The Hon'ble Sir Bijoy Prasad Singh Roy, Kt.

Chittagong.—No. 6766M.—28th August 1936.—In exercise of the power conferred by section 58(2) of the Bengal Municipal Act, 1932 (Bengal Act XV of 1932), the Government of Bengal (Ministry of Local Self-Government) are pleased to appoint Maulvi Kabiruddin Ahammad to be a Commissioner of the Cox's Bazar Municipality, in the district of Chittagong, *vice* Khan Sahib Maulvi Mazaffar Ahmad Chowdhury, deceased.

24-Parganas.—No. 6796M.—29th August 1936.—In exercise of the power conferred by sub-section (*1*) of section 24 of the Bengal Municipal Act, 1932 (Bengal Act XV of 1932), the Government of Bengal (Ministry of Local Self-Government) are pleased to fix Thursday, the 25th February 1937, as the date for the first general election of Commissioners of the Garden Reach Municipality in the Presidency Division.

Rangpur.—No. 6812M.—31st August 1936.—In exercise of the power conferred by section 506 of the Bengal Municipal Act, 1932 (Bengal Act XV of 1932), the Government of Bengal (Ministry of Local Self-Government) are pleased to confirm the by-laws framed by the Commissioners of the Rangpur Municipality in the district of Rangpur, under section 329 of the said Act, and published for information under notification No. 2904M., dated the 27th April 1936.

Khulna.—No. 6848L.S.-G.—1st September 1936.—It is hereby notified that under section 7 of the Bengal Local Self-Government Act, 1885 (Bengal Act III of 1885), the following gentlemen have been elected to be members of the Khulna district board:—

Elected by Sadar local board.

Babu Hemnath Banerji, B.L.

Babu Rajendra Nath Sarkar, M.A., B.L.

Babu Dhirendra Nath Bhattacharji.

Maulvi Shamsur Rahman, B.L.

Maulvi Abdul Wahab.

Babu Sashadhar Bachar.

Elected by Bagerhat local board.

Rai Suk Lal Nag Bahadur, M.L.C.

Rai Sahib Rasik Lal Chakravarty.

Babu Sailendra Nath Ghosh.

Babu Pranab Chandra Ray Chaudhuri.

Babu Gopal Chandra Acharjyya.

M. Khalilar Rahaman.

M. Serajuddin Jamadar.

Elected by Satkhira local board.

Rai Jatindra Nath Ghosh Bahadur, B.L.

Babu Arabinda Nath Ray Chaudhuri, B.L.

Maulvi Abul Quasem, M.A., B.L., M.L.C.

Maulvi Abdur Rauf Khan Chaudhuri.

Babu Surendra Nath Chaudhuri.

Babu Rajendra Nath Nandi.

Babu Satyapriya Chatterjee.

2. Under section 7 of the Act, the Government of Bengal (Ministry of Local Self-Government) are pleased to appoint the following gentlemen to be members of the above district board:—

Civil Surgeon, Khulna (*ex-officio*).

Subdivisional Officer, Bagerhat (*ex-officio*).

Subdivisional Officer, Satkhira (*ex-officio*).

Maulvi Syed Sultan Ali, B.L.

Khan Bahadur Maulvi Mabarak Ali.

Khan Sahib Maulvi K. M. Rezwanullah Khan.

Maulvi Syed Tofazzel Hossain, B.A., B.L.

Alhadj Khan Sahib Nesamuddin Ahmed.

Rai Mahendra Kumar Ghose, Bahadur, B.L.

Babu Mukunda Behari Mallick, M.A., B.L., M.L.C.

Medical.

Minister-in-charge: The Hon'ble Sir Bijoy Prasad Singh Roy, Kt.

Calcutta.—No. 3389Medl.—21st August 1936.—Dr. Biraj Mohan Das Gupta, Assistant Professor of Protozoology, School of Tropical Medicine, Calcutta, is appointed to act, until further orders, as Professor of Protozoology of that institution in addition to his own duties, with effect from the 4th August 1936, *vice* Lt.-Col. R. Knowles, I.M.S., deceased.

NOTIFICATIONS.

Minister-in-charge: The Hon'ble Sir Bijoy Prasad Singh Roy, Kt.

No. 3074Medl.—22nd July 1936.—It is hereby notified for general information that the Government of Bengal (Ministry of Local Self-Government) are pleased to make the following amendments of rules 22 and 68 of the rules for the management, admission and training of students in the Government Medical Schools in Bengal, issued under notification No. 1716Medl., dated the 30th June 1921, as subsequently amended, viz.:—

(*i*) For the word "March" in rule 22 *substitute* "February".

(*ii*) *Add* the following to rule 68:—

Any such student who fails to appear at the school test examination shall be deemed to have failed at such examination:

Provided that if a first year student fails to appear at the examination on the ground of illness or any other adequate ground beyond his control which must be proved to the satisfaction of the Superintendent, he may be readmitted at the discretion of the Superintendent at the next ensuing session only.

No. 3393Medl.—22nd August 1936.—The following draft of an amendment, which in exercise of the power conferred by section 459A of the Bengal Municipal Act, 1932 (Bengal Act XV of 1932), and clause (*k*) of section 138 of the Bengal Local Self-Government Act of 1885 (Bengal Act III of 1885), the Government of Bengal (Ministry of Local Self-Government) propose to make in the rules for the establishment and management of hospitals and dispensaries under the supervision of the Government of Bengal published under notification No. 138T.Medl., dated the 7th June 1915, as subsequently amended, is published for the information of persons likely to be affected thereby.

2. The draft will be taken into consideration on or after the 1st November 1936, and any objection or suggestion which may be received by the undersigned before that date will be duly considered:—

Draft Amendment.

For rule 22(3) *substitute* the following:—

"A manager or a member of a Committee appointed under rule 20, clause (*c*), may at any time be removed from office by the Commissioner of the Division, at the request of the proprietors or supporters *or any of them*, or by the Commissioner of his own motion—

(*a*) if he refuses to act or becomes incapable of acting, or is declared insolvent, or if after his appointment as manager or member he is convicted of an offence which in the opinion of the Commissioner of the Division involves moral turpitude; or

(*b*) if he absents himself from six consetive meetings of the Committee without having obtained permission from the Committee at a meeting; or

(*c*) if he knowingly acquires or continues to have, directly or indirectly, by himself or his partner, any share or interest in any contract or employment with, by or on behalf of the members of the Committee or holds any office of profit under them.

Note.—Nothwithstanding anything contained in clause (*c*) above, no person shall be deemed to be disqualied thereunder by reason only—

(*i*) of his having a share or interest in a contract entered into between the members of the Committee and any incorporated or registered company of which such person is a member or shareholder;

(*ii*) of his being professionally engaged on behalf of the members of the Committee as a legal practitioner and receiving a fee for services rendered in his professional capacity;

Provided that no such person shall act as a member of the Committee or take part in any proceedings relating to any matter in which he has a share or interest as described in clause (*i*) above."

Public Health.

NOTIFICATION.

Minister-in-charge: The Hon'ble Sir Bijoy Prasad Singh Roy, Kt.

Bakarganj.—No. 3445P.H.—1st September 1936.—The following draft of amendments, which in exercise of the power conferred by section 311 (*k*) of the Bengal Municipal Act, 1932 (Bengal Act XV of 1932), the Government of Bengal (Ministry of Local Self-Government) propose to make in the rules for the regulation of the supply of filtered water to private houses in the Barisal Municipality, published with notification No. 1738M., dated 26th July 1915, as subsequently amended, is published for the information of persons likely to be affected thereby.

2. The draft will be taken into consideration on the 16th November 1936, and any objection or suggestion which may be received by the undersigned through the District Magistrate and the Divisional Commissioner before that date will be duly considered:—

Draft amendment.

For rule 14, *substitute* the following:—

14. (*1*) Every owner or occupier of any holding in respect of which a connection has been made under these rules shall be entitled to a supply of—

(*a*) 2,000 gallons of water per quarter for each rupee; and

(*b*) a further proportionate number of gallons per quarter for every additional fraction of a rupee;

paid by him quarterly as water-rate in respect of such holding.

(*2*) For all water in excess of the amount allowed under sub-rule (*1*) such owner or occupier shall be charged quarterly as follows:—

	Per 1,000 gallons.
(*a*) For any excess quantity of water not exceeding one-half of the amount of the allowance prescribed in sub-rule (1) ...	Annas four.
(*b*) For any further excess quantity of water exceeding one-half of the amount of the allowance prescribed in sub-rule (1), but not exceeding that amount ...	Annas eight.
(*c*) For any further excess quantity of water exceeding the amount of the allowance prescribed in sub-rule (1), but not exceeding twice that amount ...	Annas twelve.
(*d*) For any further excess quantity of water exceeding twice the amount of the allowance prescribed in sub-rule (1) ...	Rupee one and annas four only.

G. S. DUTT,

Secy. to the Govt. of Bengal.

EDUCATION DEPARTMENT.

NOTIFICATIONS.

Minister-in-charge: The Hon'ble Khan Bahadur M. Azizul Haque.

Hooghly.—No. 2879Edn.—28th August 1936.—Babu Charusashi Chatterji, officiating Professor of Philosophy, Hooghly College, is confirmed in the appointment and in the Bengal Educational Service (old scale) with effect from the 1st April 1935.

Malda-Nadia.—No. 2899Edn.—28th August 1936.—Maulvi Khabiruddin Ahmad, District Inspector of Schools, Malda, is transferred as District Inspector of Schools, Nadia, with effect from the date on which he joins the appointment, *vice* Khan Sahib Maulvi Anwarul Quadir.

Howrah-Nadia. — No. 2900Edn. — 28th August 1936.—Maulvi Dilwar Hossain, Subdivisional Inspector of Schools, Howrah, in the Subordinate Educational Service, is appointed to act, until further orders, in the Bengal Educational Service as District Inspector of Schools, Malda, with effect from the date on which he joins the appointment, *vice* Maulvi Khabiruddin Ahmad, transferred.

Nadia.—No. 2901Edn.—28th August 1936 —Mr. Manmatha Nath Kar, Subdivisional Inspector of Schools, Nadia, in the Subordinate Educational Service, is appointed to act in the Bengal Educational Service as District Inspector of Schools, Nadia, with effect from the 1st August 1936, pending the arrival of Maulvi Khabiruddin Ahmad, or until further orders.

Dacca.—No. 2918Edn.—29th August 1936. —Miss Niranjan Kumari Bairagi, Assistant Inspectress of Schools, Dacca Division, is allowed leave for four months and six days, with effect from the 12th June 1936, in extension of the leave already granted to her, viz., leave on average pay for two months on medical certificate, under the proviso to rule 81 (*b*) (*ii*) of the Fundamental Rules and leave on half average pay for the remaining period, under rule 81 (*d*) of those rules.

Calcutta.—No. 2927Edn.—29th August 1936.—Mr. Somnath Maitra, Professor of English, Presidency College, Calcutta, was on leave on half average pay for the period from the 3rd July to the 18th November 1934 (both days inclusive), under rule 81(*d*) of the Fundamental Rules.

2. This cancels the orders in notification in No. 593T./Edn., dated the 7th June 1936.

Calcutta.—No. 2930Edn.—29th August 1936.—The Government of Bengal (Ministry of Education) are pleased to appoint the Hon'ble Mr. B. K. Basu, C.I.E., as a member of the Governing Body of the Presidency College, Calcutta, constituted under notification No. 3472Edn., dated the 11th September 1935, for the remainder of its term, *vice* Mr. S. N. Mullick, C.I.E., deceased.

Rajshahi.—No. 2947Edn. — 31st August 1936.—The Government of Bengal (Ministry of Education) are pleased to appoint Mr. Ashraf Ali Khan Chowdhury, Bar.-at-Law, to be a member of the Governing Body of the Rajshahi College for the remainder of its present term, *vice* Khan Bahadur Maulvi Emaduddin Ahmed, deceased.

Calcutta.—No. 2951 Edn.—31st August 1936.—The Government of Bengal (Ministry of Education) are pleased to appoint the following members to constitute the Managing Committee of the Sakhawat Memorial High English School for Muslim Girls, Calcutta, for a period of one year, with effect from the 1st September 1936:—

1. Khan Bahadur Muhammad Abdul Momen, C.I.E., President.

Members.

2. Mr. Adamji Haji Dawood.

3. Sir Abdul Halim Khan Ghuznavi, M.L.A.

4. Mr. Amin Ahmed, M.A., BAR.-AT-LAW.

5. Dr. Dabiruddin Ahmad, M.B., O.B.E., V.H.A.S.

6. Assistant Director of Public Instruction, for Muhammadan Education, Bengal.

7. Mrs. Momen.

8. Mrs. Hasina Murshed.

9. Mrs. Jenkins.

10. Miss Suniti Bala Gupta, Inspectress of Schools, Presidency and Burdwan Divisions.

11. Miss Asiya Majid, Assistant Inspectress of Schools for Muhammadan Education, Presidency and Burdwan Divisions.

12. Head Mistress of the School, Secretary.

Registration.

NOTIFICATIONS.

Minister-in-charge: The Hon'ble Khan Bahadur M. Azizul Haque.

Faridpur-Rangpur.—No. 536Regn.—25th August 1936.—Babu Bijoy Chandra Dhar, officiating District Sub-Registrar of Faridpur, is appointed to act as District Sub-Registrar of Rangpur, with effect from the date on which he joins the appointment, during the absence, on leave, of Maulvi Mir Saiyid Ali, or until further orders.

Rangpur.—No. 537Regn.—25th August 1936.—Babu Ramesh Chandra Ghosh, Sadar Joint Sub-Registrar of Rangpur, is appointed to act as District Sub-Registrar of that place, with effect from the date on which he takes over charge, pending the arrival of Babu Bijoy Chandra Dhar, or until further orders.

Bakarganj.—No. 542Regn.—25th August 1936.—In exercise of the power conferred by section 3 of the Bengal Muhammadan Marriages and Divorces Registration Act, 1876 (Bengal Act I of 1876), the Government of Bengal (Ministry of Education) are pleased to appoint Maulvi A. B. M. Nurul Haq temporarily to be a Muhammadan Registrar within the police-station of Baufal, in the district of Bakarganj, during the absence, on leave, of Maulvi Raihanuddin, or until further orders.

Bakarganj.—No. 543Regn.—25th August 1936.—In exercise of the power conferred by section 2 of the Kazis' Act, 1880 (Act XII of 1880), the Government of Bengal (Ministry of Education) are pleased to appoint Maulvi A. B. M. Nurul Haq temporarily to be the Kazi for the celebration of marriages and the performance of other rites and ceremonies within the police-station of Baufal, in the district of Bakarganj, during the absence, on leave, of Maulvi Raihanuddin, or until further orders.

Chittagong.—No. 548Regn.—25th August 1936.—In exercise of the power conferred by section 3 of the Bengal Muhammadan Marriages and Divorces Registration Act, 1876 (Bengal Act I of 1876), the Government of Bengal (Ministry of Education) are pleased to appoint Maulvi Akhtar Kamal Chowdhury temporarily to be a Muhammadan Registrar within the police-station of Ramu, in the district of Chittagong, during the absence, on leave, of Maulvi Aziz Ahmed, or until further orders.

Chittagong.—No. 549Regn.—25th August 1936.—In exercise of the power conferred by section 2 of the Kazis' Act, 1880 (Act XII of 1880), the Government of Bengal (Ministry of Education) are pleased to appoint Maulvi Akhtar Kamal Chaudhury temporarily to be the Kazi for the celebration of marriages and the performance of other rites and ceremonies within the police-station of Ramu, in the district of Chittagong, during the absence, on leave, of Maulvi Aziz Ahmed, or until further orders.

Midnapore.—No. 554Regn.—25th August 1936.—In exercise of the power conferred by section 3 of the Bengal Muhammadan Marriages and Divorces Registration Act, 1876 (Bengal Act I of 1876), the Government of Bengal (Ministry of Education) are pleased to appoint Maulvi Muhammad Abdul Quadir temporarily to be a Muhammadan Registrar within the police-stations of Khajri and Bhagawanpur, in the district of Midnapore.

Midnapore.—No. 555 Regn.—25th August 1936.—In exercise of the power conferred by section 2 of the Kazis Act, 1880 (Act XII of 1880), the Government of Bengal (Ministry of Education) are pleased to appoint Maulvi Muhammad Abdul Quadir temporarily to be the Kazi for the celebration of marriages and the performance of other rites and ceremonies within the police-stations of Khajri and Bhagawanpur, in the district of Midnapore.

Bakarganj.—No. 560 Regn.—25th August 1936.—In exercise of the power conferred by section 3 of the Bengal Muhammadan Marriages and Divorces Registration Act, 1876 (Bengal Act I of 1876), the Government of Bengal (Ministry of Education) are pleased to appoint Maulvi Khondkar Muhammad Shamsul Haq temporarily to be a Muhammadan Registrar within the police-station of Bamna, in the district of Bakarganj, during the absence, on leave, of Maulvi Mahmudullah, or until further orders.

Bakarganj.—No. 561Regn. — 25th August 1936.—In exercise of the power conferred by section 2 of the Kazis Act, 1880 (Act XII of 1880), the Government of Bengal (Ministry of Education) are pleased to appoint Maulvi Khondkar Muhammad Shamsul Haq temporarily to be the Kazi for the celebration of marriages and the performance of other rites and ceremonies within the police-station of Bamna, in the district of Bakarganj, during the absence, on leave, of Maulvi Mahmudullah, or until further orders.

Nadia.—No. 569Regn.—28th August 1936.—In exercise of the power conferred by section 3 of the Bengal Muhammadan Marriages and Divorces Registration Act, 1876 (Bengal Act I of 1876), the Government of Bengal (Ministry of Education), are pleased to appoint Maulvi Mahiuddin Khan temporarily to be a Muhammadan Registrar within the police-stations of Daulatpur and Bhairamara, in the district of Nadia, during the absence, on leave, of Maulvi Muhammad Waliullah, or until further orders.

Nadia.—No. 570Regn.—28th August 1936.—In exercise of the power conferred by section 2 of the Kazis' Act, 1880 (Act XII of 1880), the Government of Bengal (Ministry of Education) are pleased to appoint Maulvi Mahiuddin Khan temporarily to be the Kazi for the celebration of marriages and the performance of other rites and ceremonies within the police-stations of Daulatpur and Bhairamara, in the district of Nadia, during the absence, on leave, of Maulvi Muhammad Waliullah, or until further orders.

Murshidabad.—No. 575Regn.—29th August 1936.—Maulvi Abul Khair Muhammad Siddiq, officiating District Sub-Registrar of Murshidabad, is allowed leave on average pay for two months, on medical certificate, under the proviso to rule 81(*b*)(*ii*) of the Fundamental Rules, in extension of the leave already granted to him.

Dacca.—No. 577Regn.—29th August 1936.—In exercise of the power conferred by section 3 of the Bengal Muhammadan Marriages and Divorces Registration Act, 1876 (Bengal Act I of 1876), the Government of Bengal (Ministry of Education) are pleased to appoint Maulvi Muhammad Ishaque temporarily to be a Muhammadan Registrar within the police-station of Raipura, in the district of Dacca.

Dacca.—No. 578Regn.—29th August 1936.—In exercise of the power conferred by section 2 of the Kazis' Act, 1880 (Act XII of 1880), the Government of Bengal (Ministry of Education) are pleased to appoint Maulvi Muhammad Ishaque temporarily to be the Kazi for the celebration of marriages and the performance of other rites and ceremonies within the police-station of Raipura, in the district of Dacca.

H. GRAHAM,
Secy. to the Govt. of Bengal.

Orders by the Director of Public Instruction, Bengal.

Bengal Educational Service.

Dinajpur.—No. 44B.—20th August 1936.—Mr. Maniruddin Tarafdar, District Inspector of Schools, Dinajpur, in the Bengal Educational Service, is granted leave on average pay for the period from the 31st July 1936 to the 19th August 1936, both days inclusive, under Fundamental Rules 81 (*b*) (*ii*) and 82 (*b*).

Chittagong.—No. 54B.—21st August 1936.—Babu Aswini Kumar Bhattacharjee, Head Master, Chittagong Collegiate School, in the Bengal Educational Service, is granted in terms of rules 81 (*b*) (*ii*) and 82 (*b*) of the Fundamental Rules, leave on average pay for 3 months and 29 days from 1st September 1936.

Bakarganj.—No. 47B.—22nd August 1936.—Khan Sahib Maulvi Serajuddin Ahmed, Head Master, Barisal Zilla School, in the Bengal Educational Service, is granted leave for the period from 14th August 1936 to 13th October 1936, viz., leave on average pay for one month and 27 days under Fundamental Rules 81 (*b*) (*ii*) and 82 (*b*) and leave on half average pay for the remaining period, under Fundamental Rule 81 (*d*).

2. He is permitted to suffix to his leave, the Puja vacation of the Barisal Zilla School extending from 14th October 1936 to 16th November 1936, under Fundamental Rule 82 (*d*).

Bankura.—No. 48B.—24th August 1936.—Babu Umesh Chandra De, District Inspector of Schools, Bankura, in the Bengal Educational Service, is declared to have been on privilege leave on full pay for one month, under Article 260 of the Civil Service Regulations, in extension of the leave already granted to him in this office notification No. 32B., dated 30th June 1936.

J. M. BOTTOMLEY,
Director of Public Instrn., Bengal.

FINANCE DEPARTMENT.

Audit.

NOTIFICATIONS.

No. 6956F.—25th August 1936.—In exercise of the powers conferred by rule 44 of the Civil Services (Classification, Control and Appeal) Rules, and in supersession of the rule promulgated with Bengal Government, Finance Department, notification, dated the 23rd September 1929, the Governor in Council is pleased to make the following amendment to the Fundamental Rules, namely:—

Amendment.

Below Fundamental Rule 27 the following shall be inserted as a note, namely:—

"*Note*—A subordinate police officer, *i.e.*, an officer of or below the rank of Inspector, when re-enlisted after discharge or resignation may, with the sanction of the authority competent to fill the appointment held by him, be allowed to count towards increment of pay the service (including military police service) rendered before such discharge or resignation, even though it was not on the same time-scale or was under another Government. Each case, however, will be decided on its merits and it must always be considered whether the individual is deserving of the privilege."

No. 6703F.—13th August 1936.—In exercise of the power conferred by rule 41 of the Civil Services (Classification, Control and Appeal) Rules, the Governor in Council and acting with his Ministers is pleased to make the following rule regulating the pension of the incumbent of the post of Junior Public Prosecutor, Calcutta:—

Rule.

For the purpose of pension, the incumbent of the said post shall be treated as if he were an officer enumerated in articles 349A and 404A of the Civil Service Regulations.

2. All existing orders relating to the pension of the holder of the said post in so far as they are not inconsistent with the above rule are hereby confirmed.

No. 6710F.—14th August 1936.—In exercise of the powers conferred by Fundamental Rule 44 and rules 41 and 44 of the Civil Services (Classification, Control and Appeal) Rules, the Governor in Council and acting with his Ministers is pleased to make the following amendment to the Subsidiary Rules made under Fundamental Rule 44:—

Page 69.—S.R. 113.—At the end of S.R. 113 the following shall be inserted as a note:—

"*Note.*—In cases where a Government servant is transferred from station A to station B and is again transferred within a reasonably short time to another station C, he may be allowed under Subsidiary Rule 113(*a*) I (*iii*) to recover the cost of carriage of personal effects from station A to station C subject to the conditions (1) that the total weight carried

from station B to station C and from station A to station C does not exceed the maximum limit prescribed in the rule and (2) that the total cost of transporting the effects from station A to station B, from station B to station C and from station A to station C does not exceed the amount admissible from station A to station B *plus* that admissible from station B to station C."

ADDENDUM AND CORRIGENDUM.

No. 7116F.—29th August 1936. The following correction, which has been authorised, is published for general information:

Fundamental and Subsidiary Rules, 1st Edition (Reprint), 1929.

Page 50.—S. R. 67—For note 2 under this rule as inserted by correction slip No. 277, dated the 14th September 1932, substitute the following:—

"*Note 2.* In the following cases, the absences have been declared as "absence on duty," but the travelling allowance is permitted to be drawn from the Government of Assam if the journey is to Gauhati or Sylhet, otherwise from the funds of the Calcutta University at the rates admissible under their rules:—

(*i*) Government servants in Western Bengal, who are Fellows of the University, attending meetings of the Senate, Faculties and the Boards of Studies of the University.

(*ii*) Government servants appointed by the University to inspect educational institutions or to conduct examinations in practical subjects on behalf of the University".

E. N. BLANDY,
Secy. to the Govt. of Bengal.

COMMERCE DEPARTMENT.

NOTIFICATIONS.

No. 6121Com.—25th August 1936.—In exercise of the powers conferred by the proviso to sub-rule (*1*) of rule 40A of the Indian Electricity Rules, 1922, the Governor in Council is pleased to make the following amendments in this Government notification No. 3162Com., dated the 29th April 1936, namely:—

(1) After item No. (14) *add* the words "The Corporation of Calcutta" as item No. (15).

(2) *Delete* the proviso to the said notification.

No. 6277Com.—27th August 1936.—In exercise of the powers conferred by sub-section (*2*) of section 10B of the Workmen's Compensation Act, 1923 (VIII of 1923), the Governor in Council is pleased to direct that the provisions of sub-section (*1*) of the said section shall apply to all ships wherein, whereon or in connection with which any of the operations enumerated in clause (*vii*) of Schedule II to the said Act are carried on and that the report referred to in the said sub-section (*1*) shall be sent to the Commissioner by the owners or the agents of such ship.

No. 6331Com.—31st August 1936.—In exercise of the power conferred by the first proviso to rule 9 of the Bengal Electricity Duty Rules, 1935, the Governor in Council is pleased hereby to appoint the Chief Electric Inspector, Bengal, to make assessments under the said proviso and to exempt consumers from the requirements of the said rules within the district of the 24-Parganas.

No. 6373Com. 1st September 1936. The following draft of certain rules which the Government of Bengal propose to make in exercise of the powers conferred by sub-section (*2*) of section 26 of the Payment of Wages Act, 1936 (IV of 1936), read with section 22 of the General Clauses Act, 1897 (X of 1897), is published as required by sub-section (*5*) of section 26 of the first named Act for the information of all persons likely to be affected thereby, and notice is hereby given that the draft will be taken into consideration on or after the 1th December 1936.

Any objection or suggestions which may be received in respect of the draft before the date specified will be considered by the Government of Bengal:

Draft Rules.

1. *Title.* These rules may be called the Bengal Payment of Wages Rules, 1936.

2. *Definitions.* In these rules, unless there is anything repugnant in the subject or context,—

(*a*) "the Act" means the Payment of Wages Act (IV of 1936);

(*b*) "the Authority" means the authority appointed under sub-section (*1*) of section 15 of the Act;

(*c*) "the Chief Inspector of Factories" means the Chief Inspector of Factories appointed under sub-section (*2*) of section 10 of the Factories Act (XXV of 1934);

(*d*) "the Court" means the court mentioned in sub-section (*1*) of section 17 of the Act;

(*e*) "deduction for breach of contract" means a deduction made in accordance with the provisions of the proviso to sub-section (*2*) of section 9;

(*f*) "deduction for damage or loss" means a deduction made in accordance with the provisions of clause (*c*) of sub-section (*2*) of section 7;

(*g*) "Form" means a form appended to these rules;

(*h*) "Inspector" means the Inspector authorized by or under section 14 of the Act;

(*i*) "person employed" excludes all persons to the payment of whose wages the Act does not apply;

(*j*) "section" means a section of the Act;

(*k*) "paymaster" means an employer or other person responsible under section 3 of the Act for the payment of wages;

(*l*) words and expressions defined in the Act shall be deemed to have the same meaning as in the Act.

3. *Register of Fines.*—(1) In any factory in respect of which the employer has obtained approval under sub-section (*1*) of section 8 to a list of acts and omissions in respect of which fines may be imposed, the paymaster shall maintain a Register of Fines in Form I.

(2) At the beginning of the Register of Fines there shall be entered serially numbered the approved purpose or purposes on which the fines realized are to be expended.

(3) When any disbursements are made from the fines realized, a deduct entry of the amount so expended shall be made in the Register of Fines, and a voucher or receipt in respect of the amount shall be affixed to the register. If more than one purpose has been approved the entry of the disbursement shall also indicate the purpose for which it is made.

4. *Register of deductions for damage or loss.*—In every factory in which deductions for damage or loss are made the paymaster shall maintain the register required by sub-section (*2*) of section 10 in Form II.

5. *Register of Wages.*—A Register of Wages shall be maintained in every factory and may be kept in such form as the paymaster finds convenient but shall include the following particulars :—

(*a*) the gross wages earned by each person employed for each wage period;

(*b*) all deductions made from those wages, with an indication in each case of the clause of sub-section (*2*) of section 7 under which the deduction is made;

(*c*) the wages actually paid to each person employed for each wage period.

6. *Maintenance of Registers.*—The registers required by rules 3, 4, 5 and 17 shall be preserved for twelve months after the date of the last entry made in them.

7. *Weights and Measures.*—(1) All weights, measures, or weighing machines which are used in checking, or ascertaining the wages of persons employed in any factory shall be examined at least biennially by an Inspector who may prohibit the use of any weight, measure, or weighing machine which he finds to register incorrectly.

(2) If the Inspector considers that any action should be taken under the Indian Weights and Measures of Capacity Act (XXXI of 1871), or the Indian Penal Code (XLV of 1860), he may seize the article in question and shall record his opinion and send it to the District Magistrate for such action as he may think fit.

8. *Notice of dates of payment.*—The paymaster shall display, in a conspicuous place at or near the main entrance of the factory a notice, in English and in the language of the majority of the persons employed therein, giving for not less than two months in advance, the days on which wages are to be paid.

9. *Prescribed authority.*—The Chief Inspector of Factories shall be the authority competent to approve, under sub-section (*1*) of section 8, acts and omissions in respect of which fines may be imposed and, under sub-section (*3*) of section 8, the purposes on which the proceeds of fines shall be expended.

10. *Application in respect of fines.*—Every employer requiring the power to impose fines in respect of any acts and omissions on the part of employed persons shall send to the Chief Inspector of Factories –

(*a*) a list, in English, in duplicate, clearly defining such acts and omissions;

(*b*) in cases where the employer himself does not intend to be the sole person empowered to impose fines, a list, in duplicate, showing those appointments in his factory of which the incumbents may pass orders imposing fines and the class of establishment on which the incumbent of each such appointment may impose fine.

11. *Approval of list of acts and omissions.*—The authority appointed under rule 9 on receipt of the lists prescribed in the preceding rule may, after such enquiry as he considers necessary, pass orders either—

(*a*) disapproving the lists,

(*b*) approving the lists either in their original form or as amended by him, in which case such lists shall be considered to be approved lists,

provided that no order disapproving or amending any lists shall be passed unless the employer shall have been given an opportunity of showing cause orally or in writing why the lists as submitted by him should be approved.

12. *Posting of list.*—The employer shall display at or near the main entrance of the factory a copy in English, together with a literal translation thereof, in the language of the majority of the persons employed therein, of the list approved under rule 11.

13. *Persons authorized to impose fines.*—No fine may be imposed by any person other than an employer, or a person holding an appointment named in a list submitted under rule 10.

14. *Procedure in imposing fines and deductions.*—Any person desiring to impose a fine on an employed person or to make a deduction for damage or loss shall explain personally to the said person the act or omission, or damage or loss, in respect of which the fine or deduction is proposed to be imposed and the amount of the fine or deduction, which it is proposed to impose, and shall hear his explanation in the presence of at least one other person.

15. *Information to paymaster.*—The person imposing a fine or directing the making of a deduction for damage or loss shall at once inform the paymaster of all particulars, so that the register prescribed in rule 3 or rule 4 may be duly completed.

16. *Deductions for breach of contract.*—(1) No deduction for breach of contract shall be made from the wages of an employed person who is under the age of fifteen years or is a woman.

(2) No deduction for breach of contract shall be made from the wages of any employed person unless:—

(*a*) there is provision in writing forming part of the terms of the contract of employment requiring him to give notice of the termination of his employment, and

(*i*) the period of this notice does not exceed fifteen days or the wage-period, whichever is less; and

(*ii*) the period of this notice does not exceed the period of notice which the employer is required to give of the termination of that employment;

(*b*) this rule has been displayed in English and in the language of the majority of the employed persons at or near the main entrance of the factory and has been so displayed for not less than one month before the commencement of the absence in respect of which the deduction is made;

(*c*) a notice has been displayed at or near the main entrance of the factory giving the names of the persons from whom the deduction is proposed to be made, the number of days' wages to be deducted and the conditions (if any) on which the deduction will be remitted.

Provided that where the deduction is proposed to be made from all the persons employed in any departments or sections of the factory, it shall be sufficient, in lieu of giving the names of the persons in such departments or sections, to specify the departments or sections affected.

(3) No deduction for breach of contract shall exceed the wages of the person employed for the period by which the notice of termination of service given falls short of the period of such notice required by the contract of employment.

(4) If any conditions have been specified in the notice displayed under clause (*c*) of sub-rule (*2*), no deduction for breach of contract shall be made from any person who has complied with these conditions.

17. *Advances.*—(1) An advance of wages not already earned shall not, without the previous permission of an Inspector, exceed an amount equivalent to the wages earned by the employed person during the preceding two calendar months, or if he has not been employed for that period, twice the wages he is likely to earn during the two subsequent calendar months.

(2) The advance may be recovered in instalments by deductions from wages spread over not more than twelve months. No instalment shall exceed one-third, or where the wages for any wage-period are not more than twenty rupees, one-fourth of the wages for the wage-period in respect of which the deduction is made.

(3) The amounts of all advances sanctioned and the repayments thereof shall be entered in a register in Form III.

18. *Annual Return.*—In respect of every factory in which during the calendar year any fines have been imposed or any deductions for breach of contract or for damage or loss have been made from wages, a return shall be sent in Form IV so as to reach the Chief Inspector of Factories not later than the 15th of February following the end of the calendar year to which it relates.

19. *Costs.*—(1) Where the Authority or the Court, as the case may be, directs that any costs shall not follow the event, he shall state his reasons for so doing in writing.

(2) The costs which may be awarded shall include:—

(*a*) the charges necessarily incurred on account of court-fees;

(*b*) the charges necessarily incurred on subsistence money to witnesses; and

(*c*) pleader's fees which shall ordinarily be Rs. 10 provided that the Authority or the Court, as the case may be, in any proceedings, may reduce the fee to a sum not less than Rs. 5 or increase it to a sum not exceeding Rs. 30.

(3) When a party engages more pleaders than one to defend a case, he shall be allowed one set of costs only.

20. The Authority or the Court, as the case may be, may fix fees on the payment of which any person entitled to do so may obtain copies of any documents filed with the Authority or the Court, as the case may be.

Provided that the Authority or the Court, as the case may be, may, in consideration of the poverty of the applicant, grant copies free of cost.

21. *Fees.*—The fee payable in respect of proceedings under the Act shall be:—

(*i*) For every application to summon a witness.—Four annas in respect of each witness.

(*ii*) For every other application made by or on behalf of an individual person before the Authority.—Eight annas.

(*iii*) For every other application made by or on behalf of an unpaid group before the Authority.—Four annas for each member of the group, subject to a maximum of five rupees.

(*iv*) For every appeal lodged with the Court.—Five rupees.

Provided that the Authority or the Court may, in consideration of the poverty of the applicant, reduce or remit this fee.

Provided further that no fee shall be chargeable in respect of an application presented by an Inspector.

22. *Abstracts.*—The abstracts of the Act and of the rules made thereunder to be displayed under section 25 shall be in Form V.

23. *Penalties.*—Any breach of rules 3, 4, 5, 6, 8, 12, 15 and 18 of these rules shall be punishable with fine which may extend to two hundred rupees.

FORM I.

Register of Fines.

.....*Factory*, ...

Serial No.	Name.	Father's name.	Department.	Act or omission for which fine imposed.	Whether workman showed cause against fine or not. If so, enter date.	Rate of wages.	Date and amount of fine imposed.	Date on which fine realized.	Remarks.
1	2	3	4	5	6	7	8	9	10

FORM II.

Register of Deductions for damage or loss caused to the employer, by the neglect or default of the employed persons.

.....*Factory*, ...

Serial No.	Name.	Father's name.	Department.	Damages or loss caused.	Whether worker showed cause against deduction or not. If so, enter date.	Date and amount of deduction imposed.	Nos. of instalments, if any.	Date on which total amount realised.	Remarks.
1	2	3	4	5	6	7	8	9	10

FORM III.

Register of Advances made to employed persons.

.....*Factory*, ...

Serial No.	Name.	Father's name.	Department.	Date and amount of advance made.	Purpose(s) for which advance made.	No. of instalments by which advance to be repaid.	Postponements granted.	Dates on which total amount repaid.	Remarks.
1	2	3	4	5	6	7	8	9	10

FORM IV.

Deductions from Wages.

Return for the year ending 31st December 19 .

1. Name of factory and postal address.....

2. Total number of persons employed { Adults..... Children.....

3. Total wages paid.....

4. Number of cases and amounts realized as

	No. of cases.	Amounts.
(*a*) fines		
(*b*) deductions for damage or loss		
(*c*) deductions for breach of contract		

5. Disbursements from fine fund -

Amount.	Purpose.
Rs.	

Signature.....

Dated.... .....19 . *Designation*.....

FORM V.

Abstract of the Payment of Wages Act, 1936, and the Rules made thereunder.

Whom the Act affects.

1. The Act applies to the payment of wages to persons in this factory receiving less than Rs. 200 a month.

2. No employed person can give up by contract, or agreement, his rights under the Act.

Definition of wages.

3. "Wages" means all remuneration payable to an employed person on the fulfilment of his contract of employment.

It includes bonus and any sum payable for want of a proper notice of discharge.

It excludes:

(*a*) the value of house-accommodation, supply of light, water, medical attendance, or other amenity or of any service excluded by the Governor-General in Council or the Local Government;

(*b*) the employer's contribution to a pension or provident fund;

(*c*) travelling allowance or concession or other special expenses entailed by the employment;

(*d*) any gratuity payable on discharge.

Responsibility for and method of payment.

4. The manager of the factory is responsible for the payment under the Act of wages to persons employed under him, and any contractor employing persons is responsible for payment to the persons he employs.

5. Wage-periods shall be fixed for the payment of wages at intervals not exceeding one month.

6. Wages shall be paid on a working day within seven days of the end of the wage period (or within ten days if 1,000 or more persons are employed).

The wages of a person discharged shall be paid not later than the second working day after his discharge.

7. Payments in kind are prohibited.

Fines and deductions.

8. No deductions shall be made from wages except those authorised under the Act (*see* paragraphs 9—15 below).

9. (1) Fines can be imposed only for such acts and omissions as the employer may, with the previous approval of the Chief Inspector of Factories, specify by a notice displayed at or near the main entrance of the factory and after giving the employed person an opportunity for explanation.

(2) Fines—

(*a*) shall not exceed half-an-anna in the rupee;

(*b*) shall not be recovered by instalments, or later than sixty days of the date of imposition;

(*c*) shall be recorded in a register and applied to such purposes beneficial to the employed persons as are approved by the Chief Inspector of Factories;

(*d*) shall not be imposed on a child.

10. (*a*) Deductions for absence from duty can be made only on account of the absence of the employed person at times when he should be working, and such deductions must not exceed an amount which is in the same proportion to his wages for the wage period, as the time he was absent in that period is to the total time he should have been at work.

(*b*) If ten or more employed persons, acting in concert, absent themselves without reasonable cause and without due notice, the deduction for absence can include wages for eight days in lieu of notice, but:—

(1) no deduction for breaking a contract can be made from a person under 15 or a woman,

(2) there must be a provision in writing which form part of the contract of employment, requiring that a specific period of notice of intention to cease work not exceeding fifteen days or the period of notice which the employer has to give to discharge a worker, must be given to the employer and that wages may be deducted in lieu of such notice.

(3) The above provision must be displayed at or near the main entrance of the factory.

(4) No deduction of this nature can be made until a notice that this deduction is to be made has been posted at or near the main entrance of the factory.

(5) No deduction must exceed the wages of the employed person for the period by which the notice he gives of leaving employment, is less than the notice he should give under his contract.

11. Deductions can be made for damage to or loss of goods expressly entrusted to an employed person or for loss of money for which he is required to account, where such damage or loss is due to his neglect or default.

Such deduction cannot exceed the amount of the damage or loss caused and can be made only after giving the employed person an opportunity for explanation.

12. Deductions can be made, equivalent to the value thereof, for house accommodation, amenities, or services (other than tools and raw material) supplied by the employer, provided these are accepted by the employed person as a part of the terms of his employment and have in the case of amenities and services been authorised by order of Government.

13. (*a*) Deductions can be made for the recovery of advances, or for adjustment of overpayment of wages.

(*b*) Advances made before the employment began can only be recovered from the first payment of wages for a complete wage-period but no recovery can be made of advances given for travelling expenses before employment began.

(*c*) Advances of unearned wages can be made at the paymaster's discretion during employment but must not exceed the amount of two months' wages without the permission of an Inspector.

These advances can be recovered by instalments, spread over not more than twelve months and the instalments must not exceed $\frac{1}{3}$rd, or if the wages are not more than Rs. 20, $\frac{1}{4}$th of the wages for any wage-period.

14. Deductions can be made for subscription to and for repayment of advances from any recognised provident fund.

15. Deductions can be made for payments to co-operative societies approved by the Local Government or to the postal insurance, subject to any conditions imposed by the Local Government.

Inspections.

16. An Inspector can enter on any premises, and can exercise powers of inspection (including examination of documents and taking of evidence) as he may deem necessary for carrying out the purposes of the Act.

Complaints of deductions or delays.

17. (1) Where irregular deductions are made from wages, or delays in payment take place, an employed person can make an application in the prescribed form within six months to the Authority appointed by the Local Government for the purpose. An application delayed beyond this period may be rejected unless sufficient cause for the delay is shown.

(2) Any legal practitioner, official of a registered trade union, Inspector under the Act, or other person acting with the permission of the Authority, can make the complaint on behalf of an employed person.

(3) A single application may be presented by, or on behalf of, any number of persons belonging to the same factory the payment of whose wages has been delayed.

Action by the Authority.

18. The Authority may award compensation to the employed person in addition to ordering the payment of delayed wages or the refund of illegal deductions.

If a malicious or vexatious complaint is made, the Authority may impose a penalty not exceeding Rs. 50 on the applicant and order that it be paid to the employer.

Appeal against the Authority.

19. An appeal in the prescribed form against a direction made by the Authority may be preferred, within thirty days (in Calcutta to the Court of Small Causes) to the District Court:—

(*a*) by the paymaster if the total amount directed to be paid exceeds Rs. 300;

(*b*) by an employed person, if the total amount of wages withheld from him or his co-workers, exceeds Rs. 50;

(*c*) by a person directed to pay a penalty for a malicious or vexatious application.

Punishments for breaches of the Act.

20. Any one delaying the payment of wages beyond the due date, or making any unauthorised deduction from wages is liable to a fine up to Rs. 500, but only if prosecuted with the sanction of the Authority or the Appellate Court.

21. The paymaster who,—

(1) does not fix a wage-period, or
(2) makes payment in kind, or
(3) fails to display at or near the main entrance of the factory this Abstract in English and in the language of the majority of the employed persons, or
(4) breaks certain rules made under the Act,

is liable to a fine not exceeding Rs. 200.

A complaint to this effect can be made only by the Inspector, or with his sanction.

R. L. WALKER,
Secy. to the Govt. of Bengal (offg.).

Orders by the Registrar of Joint Stock Companies, Bengal.

Calcutta, the 27th August 1936.

In the matter of the Indian Companies Act, 1913 (VII of 1913), and in the matter of Midnapore Dairy, Ltd.

Notice is hereby given that, on the expiration of three months from date, the name of Midnapore Dairy, Ltd., will, unless cause is shown to the contrary, be struck off the register, and the company will be dissolved.

In the matter of the Indian Companies Act, 1913 (VII of 1913), and in the matter of Ganges Insurance Co., Ltd.

Notice is hereby given that, on the expiration of three months from date, the name of Ganges Insurance Co., Ltd., will, unless cause is shown to the contrary, be struck off the register, and the company will be dissolved.

In the matter of the Indian Companies Act, 1913 (VII of 1913), and in the matter of India Pacific Assurance, Ltd.

Notice is hereby given that, on the expiration of three months from date, the name of India Pacific Assurance, Ltd., will, unless cause is shown to the contrary, be struck off the register, and the company will be dissolved.

In the matter of the Indian Companies Act, 1913 (VII of 1913), and in the matter of Goenka and Co., Ltd.

Notice is hereby given that, on the expiration of three months from date, the name of Goenka and Co., Ltd., will, unless cause is shown to the contrary, be struck off the register, and the company will be dissolved.

N. K. MAJUMDER,
Registrar of Companies under Act VII of 1913.

MARINE DEPARTMENT.

NOTIFICATION.

No. 26Mne.—26th August 1936.—In the table appended to rule 4A of the rules published under Marine Department notification No. 50Mne., dated the 22nd November 1930, as amended by Marine Department notification No. 20Mne., dated the 27th July 1936, all the entries in columns 1, 2 and 3 of the said table relating to Dhamra river and False Point shall be omitted.

E. N. BLANDY,
Secy. to the Govt. of Bengal.

PUBLIC WORKS DEPARTMENT.

Establishment.

NOTIFICATION.

No. 40.—29th August 1936.—Babu Dhirendra Nath Roy, Assistant Engineer, Bakarganj Division, was allowed leave on average pay for thirteen days, from the 3rd to the 15th August 1936 (both days inclusive).

C. P. M. HARRISON, *Chief Engineer.*

Communications.

NOTIFICATION.

Minister-in-charge: The Hon'ble Nawab Sir Mohiuddin Faroqui, Kt., of Ratanpur.

No. 11C.—27th August 1936.—It is hereby notified for general information that the Government of Bengal (Ministry of Public Works) are pleased to order that the following roads together with the drains and side lands appertaining thereto which are now under the charge of the district board of the 24-Parganas, shall be taken over by the Public Works Department for future maintenance with effect from the 1st October 1936:—

	Roads.	Approximate length. M. F. Yds.
1.	Lock Gate Road (from Chitpore Lock Gate to Paikpara)	0 5 0
2.	Cossipore Dum-Dum Road (from Cossipore Ghat to Dum-Dum) ..	2 7 180
3.	Barrackpore Park Road (from Barrackpore Trunk Road 14th mile Titagar to south-west gate of Government Park at Barrackpore)	0 5 67
4.	Cross Dam Road (from Diamond Harbour Road to Diamond Harbour Railway Station) ..	0 4 215
5.	Budge Budge Road (from Sonadanga to river Hooghly at Achipore) ..	13 1 0

2. Contribution payable by Government to the district board for maintenance of the roads in question will cease from 1st October 1936.

H. S. E. STEVENS,
Secy. to the Govt. of Bengal.

DEPARTMENT OF AGRICULTURE AND INDUSTRIES.

Industries.

CALCUTTA, THE 25TH AUGUST 1936.

RESOLUTION—No. 5633 IND.

Minister-in-charge: The Hon'ble Nawab Sir Mohiuddin Faroqui, Kt., of Ratanpur.

Read an application from Babus Darpa Narayan Pal, Narendra Narayan Pal, Sarojaksya Pal and Bhola Nath Pal of village Bhadrapur, police-station Nalhati, district Birbhum (as modified by their subsequent letter of 30th October 1935), asking for a loan of Rs. 1,325 under the Bengal State Aid to Industries Act, 1931 (Bengal Act III of 1931), for the purpose of developing their Bhadrapur Silk Factory in Birbhum district.

Read also the resolution adopted by the Board of Industries, Bengal, at a meeting held on the 20th November 1935, incorporated in the report submitted with letter No. 785B.I., dated the 20th February 1936, from the Secretary to the Board of Industries, Bengal, and resolution No. 13, dated the 24th June 1936, adopted in its meeting, dated the 24th June 1936, and submitted with the Secretary to Board's letter No. 277B.I., dated the 13th July 1936.

Order.—Ordered that the loan of Rs. 1,325 only asked for be sanctioned, provided that it does not exceed 50 per cent. of the net value of the assets of the applicants in the factory after deducting all encumbrances thereon existing at the time when the application was made. The loan is also subject to the following conditions:—

(1) that suitable alterations be made in their factory in order to enable the cooking and the cleaning of the cocoons being conducted separately from the hot water containing vessels attached to the ghais on the same lines as the Italian pattern machinery installed in the Berhampore Silk Weaving Institute;

(2) that the skilled reeler already in their employ be deputed to the Berhampore Silk Weaving Institute for necessary training in the use of up-to-date improved reeling machinery;

(3) that a mortgage bond be executed jointly by the applicants in the form prescribed by Government for the purpose;

(4) that interest be charged at the rate of 6¼ per cent. per annum payable with each instalment on the balance of the unpaid principal;

(5) that penal interest be charged at the rate of 8 per cent. per annum on any overdue instalment of repayment of the loan; and

(6) that the entire amount of the loan with interest thereon be repaid in ten yearly instalments of Rs. 132-8 each *plus* interest, the first instalment being payable next year on the day and month in which it will be advanced this year.

2. This cancels the orders issued with this department resolution No. 35T.A.I., dated the 24th April 1936.

Ordered also that the resolution be published in the *Calcutta Gazette*.

By order of the Govt. of Bengal,
(Ministry of Industries),

H. S. E. STEVENS,
Secy. to the Govt. of Bengal.

Agriculture.

NOTIFICATION.

Minister-in-charge: The Hon'ble Nawab Sir Mohiuddin Faroqui, Kt., of Ratanpur.

Hooghly.—No 5615Agri.—24th August 1936.—Babu Suresh Chandra Ghose, Manager, Banga Luxmi Cotton Mills, Serampur, district Hooghly, is appointed to be a non-official member of the Cotton Sub-Committee of the Board of Agriculture Department, Bengal, reconstituted in this department No. 1136Agri., of the 6th February 1936, *vice* Rev. A. E. Brown, M.A., B.SC., C.I.E., resigned.

CORRIGENDUM.

Minister-in-charge: The Hon'ble Nawab Sir Mohiuddin Faroqui, Kt., of Ratanpur.

No. 5598Agri.—24th August 1936.—In the resolution No. 1136Agri., dated the 6th February 1936, published at page 359, part I of the *Calcutta Gazette* of the 13th idem, *for* "Dr. Narendra Nath Law, M.A., PH.D., Managing Director, Bangeswari Cotton Mills, Ltd., Calcutta," *read* "Mr. Ashutosh Bhattacharyya, President, Paddy Merchants' Association, Chetla."

H. S. E. STEVENS,
Secy. to the Govt. of Bengal.

Veterinary.

NOTIFICATIONS.

Minister-in-charge: The Hon'ble Nawab Sir Mohiuddin Faroqui, Kt., of Ratanpur.

No. 5648Vety.—25th August 1936.—The following amendments are made by the Government of Bengal (Ministry of Agriculture) to the Rules for the admission of animals into the hospitals of the Bengal Veterinary College issued with notification No. 1032Vety., dated the 4th February 1936:—

Substitute the following *for* rule 14:—

"14. (*a*) A motor ambulance for the conveyance of disabled animals to the hospital from within the Glanders area in Calcutta and suburbs under the control of the Principal, Bengal Veterinary College, is available on prepayment of a fee of Rs. 10.

(*b*) The fee for the use of the motor ambulance attached to the Bengal Veterinary College Hospital *in cases other than when the animal is conveyed to the hospital* is at the flat rate of Rs. 15 per call for conveyance of animals within the Glanders area in Calcutta and suburbs *plus* an additional fee of Re. 1 per every hour or part of an hour the ambulance is detained over two hours on the actual work for which it is called, *i.e.*, not including the journey to and the journey back from, the place the ambulance is required to proceed to. The fee of Rs. 15 is payable in advance. The additional fee for detention will either be realized by the ambulance driver on the spot from the owner of the animal who shall be given a printed receipt in return for the proper fee for which the driver shall be supplied with a book of vouchers; or the same will be realized later.

(*c*) Exceptions to advance payments under (*a*) and (*b*) will be made in cases of Government departments or corporate bodies, such as the Royal Calcutta Turf Club and Calcutta Corporation and other such bodies who generally pay on receipt of bills only, and also in exceptionally emergent cases under the authority of the Principal only.

(*d*) The Principal is also empowered to exercise his discretion to remit the fees in cases of ownerless animals picked up from the street or of poor people.

No. 5737 Vety.—31st August 1936.—In pursuance of rule IX of the Bengal Provincial Services Recruitment Rules, published with Appointment Department notification No. 7183, dated the 22nd May 1930, as amended from time to time, the Government of Bengal (Ministry of Agriculture) are pleased to notify the following particulars and instructions regarding a direct appointment to be made this year to the Bengal Lower Veterinary Service:—

1. *Vacancies.*—One vacancy in the post of Assistant Director, Civil Veterinary Department; will be filled by direct appointment.

2. *Method of recruitment.*—The appointment will be mode by selection from among Muhammadan candidates possessing the qualifications specified in paragraph 4 below.

3. *Date of submission of applications.*—Applications which should be addressed to the Secretary to the Government of Bengal, Agriculture and Industries Department, Writers' Buildings, Calcutta, should reach him not later than the 30th of September 1936.

4. *Qualifications.*—The indispensable qualifications for a candidate are:—

(*i*) that he is a British subject or the subject of a State in India in respect of whom the Governor General in Council has made a declaration under section 96A of the Government of India Act;

(*ii*) that he is a native of Bengal or has a permanent domicile within Bengal, the local Government are empowered to relax this condition in exceptional cases and circumstances;

(*iii*) candidates over 25 years of age are not ordinarily eligible for appointment, exception will be made in the case of a candidate who possesses the M.R.C.V.S. diploma;

(*iv*) that he must possess diploma of a recognised Veterinary College, preference being given to those who have undergone a course of post-graduate instruction and special preference will be given to a candidate who possesses the M.R.C.V.S. diploma;

(*v*) that he is of good character; and

(*vi*) that he is of sound health, good physique and active habits and free from organic defect or bodily infirmity.

5. The selected candidate will be required to pass language test if not a Bengali.

6. Along with his appliciation every candidate shall submit certificates, written not more than one year prior to the date of his application, from two responsible persons unconnected with his College or University and not related to him, particulars of whom shall also be furnished, testifying to his private character. Every candidate shall give his present address and shall communicate at once any subsequent change in it and shall state if he has already secured employment, and if so, what.

H. S. E. STEVENS,
Secy. to the Govt. of Bengal.

Orders by the Conservator of Forests, Bengal.

Sundarbans.—No. 10158 For.—29th August 1936.—This office notification No. 8290 For., dated the 14th July 1936, posting Babu Suresh Chandra Basu, Extra Assistant Conservator of Forests, to the charge of the Khulna Range, is cancelled.

W. MEIKLEJOHN,
Conservator of Forests, Bengal.

Orders by the Registrar of Co-operative Societies, Bengal.

No. 14537.—31st August 1936.—In modification of this office notification No. 13-L., dated the 31st July 1926, so far as it relates to the appointment of Maulvi Abdul Wahed Khan, Director, Central Co-operative Bank, Limited, Rampurhat, as liquidator of the Kushipur Co-operative Society (registered No. 48 of 1918) in the district of Birbhum, I appoint the Departmental Officer in charge of Co-operative Societies, Nalhati, instead, as liquidator of the said society.

A. M. ARSHADALI,
Regr. of Co-operative Societies, Bengal.

REVENUE DEPARTMENT.

Land Revenue.

NOTIFICATIONS.

Malda.—No. 12483L.R. — 28th August 1936.—In exercise of the powers conferred by sub-section (*3*) of section 158A of the Bengal Tenancy Act, 1885 (VIII of 1885), the Governor in Council is pleased to appoint for the purpose of that section Babu Ashutosh Choudhury, Sub-Deputy Collector, Malda, to perform the functions of a Certificate Officer under the Bengal Public Demands Recovery Act, 1913, for the recovery of any arrears of rents (including cesses) due to the following estates in that district:—

(1) Mathurapur Estate.
(2) Nashipur Raj Estate.
(3) Estate of Khan Bahadur Maulvi Abdul Hayat Muhammad Abdul Ghani Khan Choudhury and his brother.
(4) Estate of Maharaja Shasi Kanta Acharya.
(5) Estate of Kazi Azharuddin Ahmed and Mosamat Kaniz Jaharan Nesa.
(6) Estate of Rai Sahib Judunandan Choudhury and Babu Ashutosh Choudhury.
(7) Estate of Babu Radhika Bhusan Majumdar and others.
(8) Estate of Maulvi Kalu Muhammad Choudhury.
(9) Estate of Babus Mohini Mohan Misra and Manmath Nath Misra.
(10) Bais Hazari Wakf Estate.
(11) Estate of Maulvi Azizur Rahman Khan and Bibi Samsunnesa Khatun *alias* Bibi Ujifannesa Khatun.
(12) Estate of Babu Bahadur Singh Singhi (tauzi Nos. 1 and 60 of the Malda Collectorate).
(13) Estate of Babu Atul Chandra Boral and another.
(14) Estate of Babu Ram Kinkar Roy.
(15) Estate of Babu Abani Mohan Moitra and another.
(16) Estate of Babu Annada Prasanna Lahiri.
(17) Estate of Babu Bhupal Chandra Roy Choudhury.
(18) Estate of Sreemati Sarat Sundari Devi.

Jessore.—No. 12486L.R.—28th August 1936.—In exercise of the power conferred by sub-section (*3*) of section 158A of the Bengal Tenancy Act, 1885 (Act VIII of 1885), the Governor in Council is pleased to appoint for the purpose of the said section Babu Pran Kumar Mukherjee, Deputy Collector, and Babu Bibhas Chandra Ghosh, Sub-Deputy Collector, Jessore, to perform the functions of Certificate Officers under the Bengal Public Demands Recovery Act, 1913 (Bengal Act III of 1913), for the recovery of the arrears of rents (including cesses) due to the following estates in the district of Jessore:—

(1) Estate of Babu Narendra Nath Mittra.

(2) Estate of Babu Sachi Prasanna Mukherjee and others of Gobardanga (Chhota Taraf).

(3) Estate of Babu Hemendra Nath Roy Choudhury and others of Satkhira.

(4) Estate of Babu Sudhangsu Kumar Mittra.

(5) Estate of Babu Arun Chandra Sinha.

Midnapore.—No. 12541L.R.—29th August 1936.—In exercise of the power conferred by sub-section (*1*) of section 3 of the Bengal Agricultural Debtors Act, 1935 (Bengal Act VII of 1936), the Governor in Council is pleased to establish a Special Debt Settlement Board, which shall be known as the Sadar Special Debt Settlement Board, in the Midnapore district, for the local areas specified in notification No. 12041L.R., dated 21st August 1936.

In exercise of the power conferred by sub-section (*2*) of section 3 of the said Act the Governor in Council is pleased to appoint the undermentioned persons to be Chairman and members respectively of the said Board for a term of three years, with effect from 16th September 1936.

In exercise of the power conferred by section 7 of the said Act the Governor in Council is pleased to empower the said Board to exercise powers under sub-section (*2*) of section 9, sub-section (*2*) of section 13, clause (*b*) of sub-section (*1*) of section 19, and section 21 of the said Act:—

1. Maulvi Osman Ali, Chairman and Member.

Members.

2. Maulvi Abul Faiz.
3. Babu Ananta Chandra Bag.
4. Babu Suresh Chandra Roy Birabar.
5. Babu Ratinath Bose.

Midnapore.—No. 12542L.R.—29th August 1936.—In exercise of the power conferred by sub-section (*1*) of section 3 of the Bengal Agricultural Debtors Act, 1935 (Bengal Act VII of 1936), the Governor in Council is pleased to establish a Special Debt Settlement Board which shall be known as the Tamluk Special Debt Settlement Board, in the Midnapore district, for the local areas specified in notification No. 12045L.R., dated the 21st August 1936.

In exercise of the power conferred by sub-section (*2*) of section 3 of the said Act the Governor in Council is pleased to appoint the undermentioned persons to be Chairman and members respectively of the said Board for a term of three years, with effect from 16th September 1936.

In exercise of the power conferred by section 7 of the said Act the Governor in Council is pleased to empower the said Board to exercise powers under sub-section (*2*) of section 9, sub-section (*2*) of section 13, clause (*b*) of sub-section (*1*) of section 19, and section 21 of the said Act:—

1. Khan Bahadur Alfazuddin Ahmed, Chairman and member.

Members.

2. Babu Monmatha Basu.
3. Babu Nibaran Pattanayek.
4. Babu Nagendra Nath Roy.
5. Babu Lalit Mitra.

Midnapore.—No. 12543L.R.—29th August 1936.—In exercise of the power conferred by sub-section (*1*) of section 3 of the Bengal Agricultural Debtors Act, 1935 (Bengal Act VII of 1936), the Governor in Council is pleased to establish a Special Debt Settlement Board, which shall be known as the Jhargram Special Debt Settlement Board, in the Midnapore district, for the local areas specified in notification No. 12042L.R., dated the 21st August 1936.

In exercise of the power conferred by sub-section (*2*) of section 3 of the said Act the Governor in Council is pleased to appoint the undermentioned persons to be Chairman and members respectively of the said Board for a term of three years, with effect from 16th September 1936.

In exercise of the power conferred by section 7 of the said Act the Governor in Council is pleased to empower the said Board to exercise powers under sub-section (*2*) of section 9, sub-section (*2*) of section 13, clause (*b*) of sub-section 19, and section 21 of the said Act:—

1. Subdivisional Officer, Jhargram (*ex-officio*), Chairman and member.

Members.

2. Rai Sahib D. M. Bhattacharjya.
3. Babu Rajendra Nath Mullick.
4. Babu Rajani Kanto Singha.
5. Babu Kunja Behari De.

Midnapore.—No. 12544L.R.—29th August 1936.—In exercise of the power conferred by sub-section (*1*) of section 3 of the Bengal Agricultural Debtors Act, 1935 (Bengal Act VII of 1936), the Governor in Council is pleased to establish a Special Debt Settlement Board, which shall be known as the Ghatal Special Debt Settlement Board, in the Midnapore district, for the local areas specified in notification No. 12043L.R., dated 21st August 1936.

In exercise of the power conferred by sub-section (*2*) of section 3 of the said Act the Governor in Council is pleased to appoint the undermentioned persons to be Chairman and members respectively of the said Board for a term of three years, with effect from 16th September 1936.

In exercise of the power conferred by section 7 of the said Act the Governor in Council is pleased to empower the said Board to exercise powers under sub-section (*2*) of section 9, sub-section (*2*) of section 13, clause (*b*) of sub-section (*1*) of section 19, and section 21 of the said Act:—

1. Babu Surendra Krishna Roy, Chairman and member.

Members.

2. Babu Gobordhan Das.
3. Babu Ashutosh Singha.
4. Babu Parbati Charan Chakravarty.
5. Babu Lalit Mohan Mandal.

Midnapore.—No. 12545L.R.—29th August 1936.—In exercise of the power conferred by sub-section (*1*) of section 3 of the Bengal Agricultural Debtors Act, 1935 (Bengal Act VII of 1936), the Governor in Council is pleased to establish a Special Debt Settlement Board, which shall be known as the Contai Special Debt Settlement Board, in the Midnapore district, for the local areas specified in notification No. 12044L.R., dated 21st August 1936.

In exercise of the power conferred by sub-section (*2*) of section 3 of the said Act the Governor in Council is pleased to appoint the undermentioned persons to be Chairman and members respectively of the said Board for a term of three years, with effect from 16th September 1936.

In exercise of the power conferred by section 7 of the said Act the Governor in Council is pleased to empower the said Board to exercise powers under sub-section (*2*) of section 9, sub-section (*2*) of section 13, clause (*b*) of section (*1*) of section 19, and section 21 of the said Act:—

1. Khas Mahal Officer, Contai Khas Mahal (*ex-officio*) Chairman and member.

Members.

2. Babu Debendra Narain Mazumdar.
3. Babu Debendra Narain Hazra.
4. Babu Shital Prosad Maity.
5. Babu Biswambhar Dinda.

Land Acquisition.

NOTIFICATIONS.

Murshidabad.—No. 12451L.A.—28th August 1936.—Whereas it appears to the Governor in Council that land is likely to be required to be taken by Government at the public expense for a public purpose, viz., for earth work for re-building bridge No. 56 at mile 102/10-11, Lalgolaghat branch of the Eastern Bengal Railway, in the village of Nawpukuria, jurisdiction list No. 120, thana Beldanga, pargana Plassey, zilla Murshidabad, it is hereby notified that for the above purpose two pieces of land comprising parts of cadastral plots Nos. 218, 217, 212, 211 and 210 of mauza Nawpukuria, in block No. I and parts of cadastral plots Nos. 477, 479, 480, 481, 482, 538, 539, 540, 541, 542, 543, 545, and plot No. 478 of mauza Nawpukuria in block No. 2/16 and altogether measuring, more or less, 1·839 acres, are likely to be required within the aforesaid village of Nawpukuria.

This notification is made, under the provisions of section 4 of Act I of 1894, to all whom it may concern.

A plan of the land may be inspected in the office of the Collector of Murshidabad.

In exercise of the powers conferred by the aforesaid section, the Governor in Council is pleased to authorise the officers for the time being engaged in the undertaking, with their servants and workmen, to enter upon and survey the land and do all other acts required or permitted by that section.

Any person interested in the above land, who has any objection to the acquisition thereof, may, within thirty days after the date on which public notice of the substance of this notification is given in the locality, file an objection in writing before the Collector of Murshidabad.

Calcutta.—No. 12457L.A.—28th August 1936.—In exercise of the powers conferred by section 48(*1*) of the Land Acquisition Act, I of 1894, the Governor in Council is pleased to withdraw from the acquisition of the entire area, viz., 0·1118 of an acre of land which was notified for acquisition under declaration No. 7003 L.A., dated the 2nd May 1936, published at page 1067, Part I of the *Calcutta Gazette* of the 7th idem and required by the authorities of the Carmichael Medical College and Hospitals for the extension of the Carmichael Medical College and Hospitals, Belgachia, in ward No. 30 of the Calcutta Municipality in the city of Calcutta.

Bakarganj.—No. 12463L.A.—28th August 1936.—Whereas it appears to the Governor in Council that land is likely to be required to be taken by Government at the expense of the Jhalakati Municipality for a public purpose, viz., for raising up the trenching ground and excavation of a tank for use of the municipal sweepers at Jhalakati, in the village of Chandkati, pargana Silimabad, district Bakarganj, it is hereby notified that for the above purpose a piece of land comprising cadastral survey plot No. 172 and portions of cadastral survey plot Nos. 171, 173, and 193 in block A, and cadastral survey plot No. 218 and portions of cadastral survey plot, Nos. 215, 217 and 219 in Block B, and measuring, more or less, 1·90 acres, is likely to be required within the aforesaid village of Chandkati.

This notification is made, under the provisions of section 4 of Act I of 1894, to all whom it may concern.

A plan of the land may be inspected in the office of the Collector of Bakarganj.

In exercise of the powers confered by the aforesaid section, the Governor in Council is pleased to authorise the officers for the time being engaged in the undertaking, with

their servants and workmen, to enter upon and survey the land and do all other acts required or permitted by that section.

Any person interested in the above land, who has any objection to the acquisition thereof, may, within thirty days after the date on which public notice of the substance of this notification is given in the locality, file an objection in writing before the Collector of Bakarganj.

Pabna.—No. 12466 L.A.—28th August 1936.—Whereas it appears to the Governor in Council that land is likely to be required to be taken by Government at the public expense for a public purpose, viz., for the Bera police-station, in the village of Uttar Shambhupur, jurisdiction list No. 4, thana Bera, pargana Kagmari, district Pabna, is is hereby notified that for the above purpose a piece of land comprising plot No. 913 and measuring, more or less, 1·01 acres, is likely to be required within the aforesaid village of Uttar Shambhupur.

This notification is made, under the provisions of section 4 of Act I of 1894, to all whom it may concern.

A plan of the land may be inspected in the office of the Collector of Pabna.

In exercise of the powers conferred by the aforesaid section, the Governor in Council is pleased to authorise the officers for the time being engaged in the undertaking, with their servants and workmen, to enter upon and survey the land and do all other acts required or permitted by that section.

Any person interested in the above land, who has any objection to the acquisition thereof, may, within thirty days after the date on which public notice of the substance of this notification is given in the locality, file an objection in writing before the Collector of Pabna.

Hooghly.—No. 12472L.A.—28th August 1936.—Whereas it appears to the Governor in Council that land is likely to be required to be taken by Government at the expense of the Hooghly-Chinsurah Municipality for a public purpose, viz., for a municipal slaughter house at Cockrel Road, in the village of Kapasdanga, jurisdiction list No. 10, thana Chinsura, pargana Arsa, district Hooghly, it is hereby notified that for the above purpose a piece of land comprising cadastral plots Nos. 3016 and 3017, and measuring, more or less, 2·089 acres, is likely to be required within the aforesaid village of Kapasdanga.

This notification is made, under the provisions of section 4 of Act I of 1894, to all whom it may concern.

A plan of the land may be inspected in the office of the Land Acquisition Collector of Hooghly.

In exercise of the powers conferred by the aforesaid section, the Governor in Council is pleased to authorise the officers for the time being engaged in the undertaking, with their servants and workmen, to enter upon and survey the land and do all other acts required or permitted by that section.

Any person interested in the above land, who has any objection to the acquisition thereof, may, within thirty days after the date on which public notice of the substance of this notification is given in the locality, file an objection in writing before the Land Acquisition Collector of Hooghly.

Nadia.—No. 12519L.A.—29th August 1936.—Maulvi Saiyid Ghulam Kabir, Deputy Magistrate and Deputy Collector, Kusthia, district Nadia, is vested with the powers of a Collector under the Land Acquisition Act I of 1894, in that subdivision.

Dacca.—No. 12521L.A.—29th August 1936.—Mr. A. B. Ganguli, I.C.S., Subdivisional Officer, Munshiganj, district Dacca, is vested with the powers of a Collector under the Land Acquisition Act (Act I of 1894) in that subdivision.

Bakarganj.—No. 12532L.A.—29th August 1936.—Whereas it appears to the Governor in Council that land is likely to be required to be taken by Government at the expense of the Kadamtala union board No. 2 for a public purpose, viz., for construction of a road in the village of Ekpaijujkhola, pargana Silimabad, zilla Bakarganj, it is hereby notified that, for the above purpose, a piece of land measuring, more or less, 0·03375 of an acre, comprising portions of cadastral survey plot Nos. 716, 720 and 724, is likely to be required within the aforesaid village of Ekpaijujkhola.

This notification is made, under the provisions of section 4 of Act I of 1894, to all whom it may concern.

A plan of the land may be inspected in the office of the Collector of Bakarganj.

In exercise of the powers conferred by the aforesaid section, the Governor in Council is pleased to authorise the officers for the time being engaged in the undertaking, with their servants and workmen, to enter upon and survey the land and do all other acts required or permitted by that section.

Any person interested in the above land, who has any objection to the acquisition thereof, may, within thirty days after the date on which public notice of the substance of this notification is given in the locality, file an objection in writing before the Collector of Bakarganj.

Pabna.—No. 12535 L.A.—29th August 1936.—Whereas it appears to the Governor in Council that land is likely to be required to be taken by Government at the expense of the district board of Pabna for a public purpose, viz., for extension of the approach road to the inspection bungalow at Shahazadpur in the village of Dwariapur, jurisdiction list No. 53, thana Shahazadpur, pargana Esupshahi, district Pabna, it is hereby notified that for the above purpose a piece of land comprising cadastral plots Nos. 5694, 5712, 5714 and 5713, and measuring, more or less, 0·24 of an acre, is likely to be required within the aforesaid village of Dwariapur.

This notification is made, under the provisions of section 4 of Act I of 1894, to all whom it may concern.

A plan of the land may be inspected in the office of the Subdivisional Officer of Sirajganj.

In exercise of the powers conferred by the aforesaid section, the Governor in Council is pleased to authorise the officers for the time being engaged in the undertaking, with their servants and workmen, to enter upon and survey the land and do all other acts required or permitted by that section.

Any person interested in the above land, who has any objection to the acquisition thereof, may, within thirty days after the date on which public notice of the substance of this notification is given in the locality, file an objection in writing before the Collector of Pabna.

Hooghly.—No. 12565L.A.—31st August 1936.—Whereas it appears to the Governor in Council that land is likely to be required to be taken by Government at the expense of the Hooghly-Chinsura Municipality for a public purpose, viz., for a trenching ground in Ward No. 1 of the said municipality, in the village of Keota, jurisdiction list No. 7, thana Chinsura, pargana Arsa, district Hooghly, it is hereby notified that for the above purpose a piece of land comprising cadastral plots Nos. 4035, 4037 and part of plot No. 4038 and measuring, more or less, 1·309 acres, is likely to be required within the aforesaid village of Keota.

This notification is made, under the provisions of section 4 of Act I of 1894, to all whom it may concern.

A plan of the land may be inspected in the office of the Land Acquisition Collector of Hooghly.

In exercise of the powers conferred by the aforesaid section, the Governor in Council is pleased to authorise the officers for the time being engaged in the undertaking, with their servants and workmen, to enter upon and survey the land and do all other acts required or permitted by that section.

Any person interested in the above land, who has any objection to the acquisition thereof, may, within thirty days after the date on which public notice of the substance of this notification is given in the locality, file an objection in writing before the Collector of Hooghly.

Nadia.—No. 12568L.A.—31st August 1936.—Whereas it appears to the Governor in Council that land is likely to be required to be taken by Government at the expense of the Kushtia Municipality for a public purpose, viz., for a burial ground in the village of Chourhans, jurisdiction list No. 32, thana Kushtia, pargana Muhammadshahi, district Nadia, it is hereby notified that, for the above purpose, a piece of land comprising cadastral plots Nos. 2422, 2459, 2439, 2440, and parts of cadastral plots Nos. 2460 and 2458, and measuring, more or less, 3·50 acres, is likely to be required within the aforesaid village of Chourhans.

This notification is made, under the provisions of section 4 of Act I of 1894, to all whom it may concern.

A plan of the land may be inspected in the office of the Subdivisional Officer, Kushtia.

In exercise of the powers conferred by the aforesaid section, the Governor in Council is pleased to authorise the officers for the time being engaged in the undertaking, with their servants and workmen, to enter upon and survey the land and do all other acts required or permitted by that section.

Any person interested in the above land, who has any objection to the acquisition thereof, may, within thirty days after the date on which public notice of the substance of this notification is given in the locality, file an objection in writing before the Collector of Nadia.

Hooghly.—No. 12571L.A.—31st August 1936.—Whereas it appears to the Governor in Council that land is likely to be required to be taken by Government at the expense of the Serampore Municipality, for a public purpose, viz., for opening out a road between Jagannath Ghat Lane and Mansatala Lane, in the village of Mahesh, jurisdiction list No. 15, thana Serampore, pargana Boro, district Hooghly, it is hereby notified that for the above purpose a piece of land comprising portions of cadastral plots Nos. 4754 and 4780, and measuring, more or less, 0·081 of an acre, is likely to be required within the aforesaid village of Mahesh.

This notification is made, under the provisions of section 4 of Act I of 1894, to all whom it may concern.

A plan of the land may be inspected in the office of the Land Acquisition Collector, Serampore.

In exercise of the powers conferred by the aforesaid section, the Governor in Council is pleased to authorise the officers for the time being engaged in the undertaking, with their servants and workmen, to enter upon and survey the land and do all other acts required or permitted by that section.

Any person interested in the above land, who has any objection to the acquisition thereof, may, within thirty days after the date on which public notice of the substance of this notification is given in the locality, file an objection in writing before the Land Acquisition Collector of Serampore.

Chittagong.—No. 12574L.A.—31st August 1936.—Whereas it appears to the Governor in Council that land is likely to be required to be taken by Government at the public expense for a public purpose, viz., for widening the two existing drains at the landing ground for aeroplanes in the village of Purba-Patenga, police-station Double Moorings, zilla Chittagong, it is hereby notified that for the above purpose pieces of land comprising the parts of revisional survey plots Nos. 1293, 1302,

1303, 1301, 1298, 1147, 1146, 1121, 1122, 1123, 1139, 1140, 1138, 1141, 1034, 1035, 1033 and 1032 and measuring, more or less, 1·40 acres, are likely to be required within the aforesaid village of Purba-Patenga.

This notification is made, under the provisions of section 4 of Act I of 1894, to all whom it may concern.

A plan of the land may be inspected in the office of the Collector of Chittagong.

In exercise of the powers conferred by the aforesaid section, the Governor in Council is pleased to authorise the officers for the time being engaged in the undertaking, with their servants and workmen, to enter upon and survey the land and do all other acts required or permitted by that section.

In exercise of the powers conferred by section 17 (*4*) of the Land Acquisition Act, I of 1894, as amended by Act XXXVIII of 1923, the Governor in Council is pleased to direct that the provisions of section 5A of the Act shall not apply in this case.

Rangpur.—No. 12577L.A.—31st August 1936.—Whereas it appears to the Governor in Council that land is likely to be required to be taken by Government at the public expense for a public purpose, viz., for construction of a drain by the Telegraph Department at Saidpur, in the village of Koya, jurisdiction list No. 7, thana Saidpur, pargana Kazirhat, district Rangpur, it is hereby notified that, for the above purpose, a piece of land comprising cadastral plot No. 6628 (part) and measuring, more or less, ·03240 of an acre is likely to be required within the aforesaid village of Koya.

This notification is made, under the provisions of section 4 of Act I of 1894, to all whom it may concern.

A plan of the land may be inspected in the office of the Subdivisional Officer, Nilphamari (Rangpur).

In exercise of the powers conferred by the aforesaid section, the Governor in Council is pleased to authorise the officers for the time being engaged in the undertaking, with their servants and workmen, to enter upon and survey the land and do all other acts required or permitted by that section.

In exercise of the powers conferred by section 17 (*4*) of the Land Acquisition Act, I of 1894, as amended by Act XXXVIII of 1923, the Governor in Council is pleased to direct that the provisions of section 5A of the Act shall not apply in this case.

Rajshahi.—No. 12580L.A.—31st August 1936.—Whereas it appears to the Governor in Council that land is likely to be required to be taken by Government at the expense of Rajshahi district board for a public purpose, viz., for Nepaldighi Gobindapur drainage scheme in the villages of Baladkhal, jurisdiction list No. 278, Goaldighi, jurisdiction list No. 355, Talgachi, jurisdiction list No. 276, Dhacopara, jurisdiction list No. 272 and in the village of Nepaldighi, jurisdiction list No. 277, thana Natore, parganas Laskarpur, Chhindabagu and Digha, district Rajshahi, it is hereby notified that, for the above purpose, a piece of land comprising cadastral part plots Nos. 493, 494, 495, 724, 725, 726, 745, 704, 705, 706, 664, 665, 680, 681, 683, 684, 685, 1070, 1071, 1073, 1076, 1077, 1078, 1084, 1085 and 1166, of mauza, Baladkhal, part plots Nos. 14, 17, 18, 207, 212, 213, 214, 215, 217, 218, 219, 220, 436, 438, 439, 441, 442, 481, 482, 483, 611, 618, 619, 621, 622, 623 and 636 of mauza Goaldighi, part plots Nos. 69, 70, 76, 83, 105, 106, 107, 108, 109, 110, 120, 121, 122, 123, 124, 125, 126, 130, 131, 132, 133, 135, 136, 137, 138, 139, 141, 142, 143, 150, 152, 155, 156, 157, 164, 165, 166, 183, 184, 195, 196, 211, 214, 215, 233, 265, 272, 290, 294, 295, 297, 298, 300, 301, 309, 310, 311, 312, 313, 316, 317, 320, 321, 327, 333, 338, 339, 343, 351, 352 and 353 of mauza Talgachi, part plots Nos. 136, 137, 138, 139, 140, 141, 142, 143, 144, 145, 582, 583, 584 and 585 of mauza Dhacopara and part plots Nos. 204, 205, 206, 208, 217, 836, 854, 855, 856, 857 and 762 of mauza Nepaldighi and measuring, more or less 12·69 acres, is likely to be required within the aforesaid villages of Baladkhal, Goaldighi, Talgachi, Dhacopara and Nepaldighi.

This notification is made, under the provisions of section 4 of Act I of 1894, to all whom it may concern.

A plan of the land may be inspected in the office of the Subdivisional Officer of Natore.

In exercise of the powers conferred by the aforesaid section, the Governor in Council is pleased to authorise the officers for the time being engaged in the undertaking, with their servants and workmen, to enter upon and survey the land and do all other acts required or permitted by that section.

In exercise of the powers conferred by section 17(*4*) of the Land Acquisition Act, I of 1894, as amended by the Act XXXVIII of 1923, the Governor in Council is pleased to direct that the provisions of section 5A of the Act shall not apply to waste or arable portions of the land in this case.

Chittagong.—No. 12583L.A.—31st August 1936.—Whereas it appears to the Governor in Council that land is likely to be required to be taken by Government at the public expense for a public purpose, viz., for the approach road to the bridge over the Tankabati river in the villages of Amirabad and Mallick-chuang, police-station Satkania, zilla Chittagong, it is hereby notified that, for the above purpose, pieces of land comprising the revisional survey plots Nos. Na 520(part), Na 522, Na 524(part), Na 526(part), Na 525-(part), Na 976, 7475, Na 839, Na 840(part), Na 842(part), Na 841, Na 529, Na 528, Na 975, Na 527(part), Na 838, Na 533(part), Na 532, 7490(part), 7489, Na 835, Na 836, Na 837, 7477, Na 843, 7478 (part), 7479(part), Na 852, Na 851(part), 4867, 4866, 9134(part), Na 634(part), 4869(part), 4870(part), Na 633(part), Na 631(part), 4871(part), 4897, 4900, Na 972, Na 973(part), 4898(part), 9153, 4896, 9152, 4895, 9150, 9151, 4894(part), Na 629(part), 4893(part), 4874(part), 4873-(part), 4872, 9135, 9115(part), 9116(part), 4839(part), 9119(part), 4842(part), 9120-(part), 4836(part), 4835(part) 4837(part), 4838(part), 9118(part), Na 636, 9149(part), 4868, 7611(part), Ka 167, 7609, 7610(part),

Ka 172(part), 7612(part), Ka 166, Ka 165-(part), Ka 164(part), 7606(part), Ka 126-(part), 7614(part), Ka 174(part), 7588(part), Ka 122(part), Ka 121, Ka 120, Ka 175, 7621-(part), 7586(part), Ka 125(part), Ka 123-(part), Ka 124(part), 7587, Ka 117, and Ka 119 of village Amirabad, and part of revisional survey plots Nos. 805, 806 and 2837 of village Mallick-chuang, and measuring, more or less, 11·95 acres are required within the aforesaid villages of Amirabad and Mallick-chuang.

This notification is made, under the provisions of section 4 of Act I of 1894, to all whom it may concern.

A plan of the land may be inspected in the office of the Collector of Chittagong.

In exercise of the powers conferred by the aforesaid section, the Governor in Council is pleased to authorise the officers for the time being engaged in the undertaking, with their servants and workmen, to enter upon and survey the land and do all other acts required or permitted by that section.

Any person interested in the above land who has any objection to the acquisition thereof, may, within thirty days after the date on which public notice of the substance of this notification is given in the locality, file an objection in writing before the Collector of Chittagong.

DECLARATIONS.

Birbhum.—No. 12448L.A.—28th August 1936.—Whereas it appears to the Governor in Council that land is required to be taken by Government at the public expense for a public purpose, viz., for throwing spoils in connection with the Kashia Nulla, Irrigation Scheme, in the village of Tailpara, jurisdiction list No. 80, in thana Nalhati, pargana Shahajadpur, district Birbhum, it is hereby declared that for the above purpose a piece of land comprising portions of the cadastral plots Nos. 1020, 1019, 1018, 1017, 1014, 1004, 1237, 1241, 1242, 1272, 1271, 1273, 1274, 1275, 1276, 1277, 1346, 1347, 1348, 1353, 1240, and 1238, and measuring, more or less, 1·02 acres, is required within the aforesaid village of Tailpara.

This declaration is made, under the provisions of section 6 of Act I of 1934.

A plan of the land may be inspected in the office of the Land Acquisition Deputy Collector, Rampurhat.

Burdwan.—No. 12454L.A.—28th August 1936.—Whereas it appears to the Governor in Council that additional land is required to be taken by Government at the public expense for a public purpose, viz., for an approach to the head sluice and for connecting the existing road pipe up to chainage 3 and 88 feet of distributary No. 10, branch canal, Damodar Canal Project in the village of Nrisinhapur, jurisdiction list No. 29, in thana Bhatar, pargana Burdwan, district Burdwan, it is hereby declared that for the above purpose two pieces of land comprising parts of cadastral survey plot No. 99, and together measuring, more or less, 0.01 of an acre, are required within the aforesaid village of Nrisinhapur.

This declaration is made, under the provisions of section 6 of Act I of 1894, to all whom it may concern.

A plan of the land may be inspected in the office of the Special Land Acquisition Officer, Burdwan, as well as in that of the Executive Engineer, Damodar Canal Division, Burdwan.

Murshidabad — No. 12460L.A. — 28th August 1936.—Whereas it appears to the Governor in Council that land is required to be taken by Government at the public expense for a public purpose, viz., for the extension of the compound of the sub-jail at Kandi in the village of Ruppur, thana Kandi, pargana Fatesingh, district Murshidabad, it is hereby declared that for the above purpose a piece of land comprising part of cadastral plot No. 1168 of village Ruppur, jurisdiction list No. 85, thana Kandi, and measuring, more or less, 0.065 of an acre, is required within the aforesaid village of Ruppur.

This declaration is made, under the provisions of section 6 of Act I of 1894, to all whom it may concern.

A plan of the land may be inspected in the office of the Subdivisional Officer of Kandi, district Murshidabad.

Midnapore.—No. 12469L.A.—28th August 1936.—Whereas it appears to the Governor in Council that land is required to be taken by Government at the expense of the Commissioners for the Port of Calcutta for a public purpose, viz., for affording access to Column No. 40 in the village of Shuklalpur, jurisdiction list No. 165, in thana Mahishadal, pargana Mahishadal, district Midnapore, it is hereby declared that for the above purpose a piece of land comprising portion of settlement plot No. 253, and measuring, more or less, 0·0017 of an acre, is required within the aforesaid village of Shuklalpur.

This declaration is made, under the provisions of section 6 of Act I of 1894, to all whom it may concern.

A plan of the land may be inspected in the office of the Subdivisional Officer, Tamluk.

Excise.

NOTIFICATIONS.

Minister-in-charge: The Hon'ble Sir Bijoy Prasad Singh Roy, Kt.

No. 786Ex.—5th August 1936.—Maulvi Motahar Husain Khan, Superintendent of Excise and Salt, is allowed leave on average pay for one month, under rule 81 (*b*) (*ii*) of the Fundamental Rules, in extension of the leave granted to him under orders of the 25th May 1936.

No. 812Ex.—12th August 1936.—In exercise of the powers conferred by section 86 of the Bengal Excise Act, 1909 (Bengal Act V of 1909), the Government of Bengal (Ministry of Excise) are pleased to make the following rules for the manufacture of Ayurvedic preparations such as Mritasanjibani Sura, Mritasanjibani Sudha, etc., in which processes of fermentation and distillation are used in their production.

Definition.

1. *The Ayurvedic medicinal preparations in which process of fermentation and distillation are used in their preparations such as Mritasanjibani Sura or Mritasanjibani Sudha or Mritasanjibani or any other preparation manufactured in accordance with the recipe and direction laid down in Arkaprokash, Ayurved Sangraha and Vaisaja-Ratnabali, hereafter referred to as "the preparations" are medicated wines of spirits.*

To be manufactured in a bonded warehouse.

2. The preparations shall be manufactured only in bond by a qualified Kabiraj or by a Kabiraji firm having a qualified Kabiraj for supervision of the manufacturing operations, and the place of manufacture shall be deemed to be a private warehouse within the meaning of the notification No. 601S.R., dated 30th March 1915.

3. Any Kabiraj or Kabiraji firm desiring to manufacture the preparations in bond shall apply for a license to the Collector of the district concerned giving the following particulars, namely:—

(*i*) the name or names, and the address or addresses of the person or persons applying; if a private firm, the name of every partner of the firm; and if a joint stock company, the name of every director thereof;

(*ii*) the name of the place at which and the full description of the premises in which the manufacture will be carried on;

(*iii*) the capital likely to be invested in the venture;

(*iv*) the name and qualifications of the Kabiraj under whose supervision the manufacture will be carried on;

(*v*) the number and full description of fermenting vessels, stills, receivers, etc., to be installed in the warehouse;

(*vi*) the amount of security the applicant or applicants are in a position to deposit with the Government in case the hypothecation of the warehouse premises and of the plants, utensils, apparatus, etc., that the bonded premises may contain at any time, is not practicable or desirable;

(*vii*) if a whole-time officer is not required, the number of days in a week on which the warehouse will have to be kept open by an Excise Officer;

(*viii*) the maximum quantity of finished preparations in I. P. gallons intended to be stored at any one time; and

(*ix*) a correct plan (in triplicate) of the proposed warehouse premises showing therein the respective position of the fermentation room,

still room, bottling room, store room, Excise Office and also of the fermenting vessels, receivers, stills and other permanent apparatus.

4. The Collector after causing such enquiries to be made as he deems necessary, shall forward the application to the Commissioner along with his report stating particularly therein if it would be possible for the existing Excise staff under him to manage the work of the warehouse. The Commissioner, if he finds no objection, shall ask the Collector to issue a license in form No. 28C, to the applicant or applicants. The license shall be renewed annually by the Collector subject to the approval of the Commissioner.

5. Prior to the commencement of work in the warehouse the licensee or the licensees (hereinafter referred to as the licensee) shall deposit Rs. 250 (two hundred and fifty rupees) as cash security for the due observance of the conditions of the license and shall also execute a bond in the prescribed form pledging the warehouse premises and also the plants, utensils, apparatus and the stock of finished preparations that the bonded premises may contain at any time for due discharge of all payments which may become due to the Government. In lieu of executing such a bond the licensee may deposit Government promissory notes of such value as the Commissioner may direct.

6. Unless the Commissioner directs otherwise, the Excise establishment attached to the warehouse shall consist of one Inspector and two peons. The licensee shall pay at the end of each calendar month the actual cost of the peons as well as such portion of the actual cost of the officer-in-charge as the Commissioner may deem commensurate with the officer's attendance. If it be not possible to detail an officer from the ordinary Excise establishment of the district for the supervision of the warehouse, the officer who may be placed in charge thereof shall, unless he is also the officer-in-charge of another warehouse, be deemed to be a whole-time officer and the entire actual cost shall be borne by the licensee, actual cost shall imply pay as well as leave and pension contribution.

7. (1) The licensee shall provide for the peons rent-free quarters in close proximity to the warehouse premises and also such quarters, to the satisfaction of the Commissioner, for a whole-time officer. In lieu of rent-free quarters for the whole-time officer-in-charge, the licensee may pay such house allowance at the end of each calendar month as may be directed by the Commissioner. If an officer is appointed exclusively for the supervision of more than one private warehouse, house allowance in such proportions as may be fixed by the Commissioner shall be realised from the different licensees.

(2) Office furniture required by the officer-in-charge shall be supplied and maintained in proper condition by the licensee at his own cost.

8. The warehouse building shall have brick walls and a roof of fire resisting material. It shall consist of a fermentation room, a still room, a large room where receivers may be installed in a separate enclosure and bottling carried on, and at least one store room for finished preparations. All the rooms, especially the fermentation room, shall be well ventilated and all the windows securely barred and wirenetted the net having a mesh not more than one inch. If a fire-heated still is intended to be used, the still room shall be situated at a safe distance from the bottling and store room, and also sufficiently protected to eliminate all possibilities of an outbreak of fire. The licensee, if he

so desire, may be permitted to store raw materials in a separate room in the warehouse. Every room shall bear on the outside a board on which shall be legibly painted in oil colour the name of the room. The receiving room, bottling room and store room for finished preparations shall have but one entrance each and shall be separately locked by the officer-in-charge and the licensee. During the hours between sunset and sunrise, the still room, when the still therein remain charged with wash, shall also be similarly locked.

9. The fermenting vessels shall be serially numbered but need not be guaged. A fire-heated still shall have a closed furnace with a chimney to carry off the smoke. The man-hole of the still intended to be used shall have a suitable contrivance so that it may be secured either with a lock or with wire and lead seals after running in work. The receivers shall be non-portable, serially numbered and gauged vessels made of approved materials and provided with suitable arrangements for taking dips and locking the man-holes and discharge cocks. Distillates must be conveyed direct from the still to a receiver through a closed pipe which shall be sealed and provided with cocks to the satisfaction of the Commissioner.

10. The warehouse shall be built strictly in accordance with the plan approved by the Commissioner. No additions and alterations to the bonded premises and to the permanent fixtures therein shall be made without his previous sanction; provided that any addition and alteration urgently required may be sanctioned by the Collector subject to the final approval of the Commissioner. The licensee shall carry out any addition or alteration which the latter may consider desirable at any time. A fresh plan of the warehouse in triplicate shall be submitted by him to the Collector whenever any addition or alteration is made.

11. A sufficient number of chemical fire extinguishers and fire-buckets shall be maintained by the licensee in the warehouse. Smoking and use of naked lights within the warehouse is prohibited. A notice to this effect should be conspiciously displayed in the warehouse building.

12. Where there is no whole-time officer, the licensee shall give in writing at least 24 hours' notice of his intention to keep the warehouse open for work, stating clearly therein the operations to be carried out. Such a notice shall be given also to a whole-time officer for work to be done on an approved holiday. He shall not keep the warehouse open for more than 8 hours on any working day, or between sunset and sunrise. For work done on an approved holiday on a requisition of the licensee, he shall pay such overtime fees for the officer as the Commissioner may prescribe.

13. The quantities of molasses and water placed in each fermenting vessel, the bulk of the fermented wash therein and the original and final gravities of the wash shall be ascertained by the officer-in-charge. For the first two items he may rely on the figures furnished by the licensee who shall keep correct accounts of materials and of wash, manufactured and distilled. No fermented wash shall be taken out of the warehouse and none brought within from outside.

14. The Commissioner may, if he deems it necessary, fix normal spirit strength and allowable margins for the preparations.

15. (1) Distillation shall be so conducted that distillates from a complete number of fermenting vessels may be collected in a receiver

at a strength of about 42 per cent. proof. After the distillation is over the licensee shall be permitted to take a duty free sample not exceeding 22 ounces from a receiver for analysis and declaration of spirit strength of the distillate. If the strength is found to be over 42 per cent. proof, the distillate shall be reduced and a fresh sample similar to the first one again be tested by the licensee before declaring the final strength. If, however, the strength of the first distillation is found to be below 42 per cent. it shall not be increased except with the previous sanction of the Collector of the district. When the requisite strength has been reached, the officer-in-charge shall send at the cost of the licensee a quart bottle of duty free sample of the product to the Head Chemist, Excise Laboratory, Calcutta, for a report on the correct strength and obscuration, and also for a declaration as to whether the product is free from deleterious matters and, therefore, fit for consumption. He shall then take charge of the receiver and issue at the strength declared by the licensee. The strength must however be corrected and necessary adjustments in the precribed registers shall be made if the actual strength as found by the Head Chemist differs from it by more than 3·0 proof degree or exceeds 42 per cent. proof.

(2) No issues shall be given prior to the receipt of the Head Chemist's report, or if the actual strength as declared by him exceeds 42 per cent. proof.

(3) The residue remaining in the still after distillation shall be destroyed by running into a drain. The officer-in-charge must personally see that the fire in the furnace is put out completely at the end of each day's distillation.

16. Only colouring matter previously approved by the Head Chemist and in such proportions as may be declared by him to be suitable shall be used. Colouring shall be done in presence of the officer-in-charge prior to drawing of a sample from a receiver for analysis and declaration of strength by the licensee. Flavouring substances other than those included in the recipe must not be used.

17. (1) Except in the case of trade samples intended for free distribution, the preparation shall be put up only in reputed quart and pint bottles and nibs containing not less than 22 ounces per quart and 11 ounces per pint and 6 ounces per nib. Each bottle shall be sealed and capsuled by the licensee in such a manner as the Commissioner may consider adequate for an easy detection of any attempt to tamper with the contents. The licensee shall also affix on each bottle a label previously approved by the Commissioner on which shall be legibly printed not only the name of the preparation and the name and address of the manufacturer, the percentage of proof spirit contained in the preparation in English and Bengali, but also the dosage and the words "for medicinal use only." The batch number shall be noted in a corner of the label. The preparation shall be removed to the store room immediately after bottling, labelling, sealing and capsuling and kept there well arranged.

(2) If for any reason re-bottling is found indispensible, it shall be permitted by the officer-in-charge. The new spirit strength shall be determined by him in such a case with the hydrometer making necessary correction for the obscuration already declared by the Head Chemist. In case reduction of the spirit strength is necessary prior to re-bottling, this may be done in an ordinary vessel noting carefully the exact quantity of the water added.

(3) Whenever bottling or re-bottling is carried on it shall be the duty of the officer-in-charge to check at random the contents of at least 5 per cent. of the bottles.

(4) The Collector may approve, reject or withdraw any label from use, whenever he considers that any such label does not conform with the provisions of the Indian Merchandise Marks Act, 1889 (IV of 1889), of any rules or orders made thereunder, or is in any way so coloured, drawn or worded as to mislead the public regarding the nature of the liquor contained in the bottle.

18. (1) Issue of the preparation shall be given by the officer-in-charge on receipt of a requisition in the prescribed form from the licensee. Only batches declared by the Head Chemist to be fit for consumption shall be issued and a new batch shall not be issued so long as there is an older batch of requisite quality in stock.

(2) For sale in Bengal duty shall be realised at the rate of Rs. 21-14 per proof gallon, and for export to other provinces at the rates prevailing therein. The preparations shall be exported from the warehouse, and duty on the exports paid strictly in accordance with the instructions issued from time to time by the Commissioner of Excise. Under-bond issues shall not be given except for export.

(3) No spirituous preparation shall be removed from the warehouse except under cover of a pass granted by the officer-in-charge.

19. For payment of duty on issues for sale in Bengal the licensee may open a personal ledger account.

20. The preparations shall not be sold by the licensee except to holders of the license in form No. 19A, to authorised importers.

21. (1) Wash found unfit for distillation shall be destroyed by the licensee in the presence of the officer-in-charge who shall note the fact in the proper register.

(2) If a batch of finished preparation is suspected to have deteriorated in quality further issues from it shall be forthwith suspended and a sample sent to the Head Chemist at the cost of the licensee for an examination. Any batch found by him unfit for consumption or not of the requisite quality shall be destroyed by the Superintendent of Excise and Salt of the district who shall note the fact in the registers concerned. Duty on the quantity destroyed shall be remitted.

22. The officer-in-charge shall maintain registers in form numbers 1, 78, 79, 81 and 200. He shall submit weekly returns in form No. 78 and monthly returns in form Nos. 78 and 89. The licensee shall keep accounts in form Nos. II, III, 78 and 89, but the first two accounts shall be checked and signed daily by the officer-in-charge who shall also be responsible for their safe custody. At the end of each calendar month the licensee shall submit to the Collector through the Officer-in-carge a statement in the prescribed form showing the working of the warehouse during the month. A copy of the statement shall be forwarded by the Collector to the Commissioner.

23. The licensee shall be bound by the provisions of the Bengal Excise Act, 1909, and the orders passed and other rules made thereunder.

Appendix.

Bengal Excise & Salt Department,
Form No. 28C.

License to establish a warehouse for the manufacture, storage in bond and wholesale vend of "Mritasanjibani Sura (Sudha)" and "Mritasanjibani."

(The counterpart agreement of this license to be signed by the Licensee and filed in the Collector's office.)

.....resident of.....
.....is hereby authorised by the undersigned, Collector of.....to establish a private warehouse at..... for the manufacture by fermentation and distillation, storage in bond and wholesale vend of Ayurvedic medicated wines, to wit "Mritasanjibani Sura (Sudha)" and "Mritasanjibani" hereinafter referred to as "the Preparations," from.....till 31st March,.....
.....

It is required of the holder of license, hereinafter called "The Licensee" as condition of its remaining in force that he duly and faithfully perform and abide by the following conditions:—

(1) That the licensee shall be bound by the provisions of the Bengal Excise Act of 1909, as amended by the Bengal Excise (Amendment) Act, 1914, and by all the notifications issued and rules made under that Act, in so far as they are applicable to this license and by all special orders which may be issued by the Excise Commissioner regarding the aforesaid and also by all the rules and orders which may be issued from time to time by the local Government or by the Excise Commissioner in connection with the manufacture of the preparations and shall cause all persons employed by him to obey such rules.

(2) That the licensee shall provide within the warehouse the following rooms to the satisfaction of the Excise Commissioner, each of which, except the fermentation room and the still room when the still therein is not charged with wash, shall be under the separate locks and keys of the officer-in-charge and of the licensee:—

(*i*) A well ventilated fermentation room.

(*ii*) A still room.

(*iii*) A room where receivers may be installed in a separate enclosure and bottling carried on.

(*iv*) One or more rooms for the storage of the preparations.

(3) That the plants, utensils and permanent apparatus within the warehouse shall be of such description and number as the Excise Commissioner may approve of maintained by the licensee in proper condition.

(4) That no addition or alteration to the warehouse or to the permanent fixtures therein shall be made by the licensee without the previous sanction of the Excise Commissioner.

(5) That the preparations shall be manufactured under the personal supervision of a qualified Kabiraj in accordance with the recipes laid down in Arkaprakash, Ayurved-Sangrah or Vaisajyaratnabali.

(6) That the licensee shall not remove fermented wash from the warehouse or bring into it any such wash from outside.

(7) That except in case of trade samples intended for free distribution the licensee shall put up the preparations only in reputed quart and pint bottles and nibs containing not less than 22 ounces per quart, 11 ounces per pint and 6 ounces per nib.

(8) That the licensee shall not bottle the preparations for sale at any strength exceeding 42 per cent. proof or beyond the normal strengths and margins that may be fixed by the Excise Commissioner.

(9) That the licensee shall not flavour the preparations with any other substances other than those included in the recipes.

(10) That the licensee shall not store in the warehouse any quantity of the preparation exceeding the limit fixed by the Excise Commissioner

(11) That the licensee shall not store in the warehouse any spirituous substance other than the preparations.

(12) That the licensee shall not take issue of the preparation from the warehouse unless and until the Head Chemist, Excise Laboratory, has declared their true spirit strength and also found them fit for consumption.

(13) That the licensee shall provide such rent-free quarters for the Excise establishment attached to the warehouse and pay such establishment cost as the Excise Commissioner may direct.

(14) That as security for the fulfilment of these conditions the licensee shall deposit with the Excise Commissioner a sum of Rs. 250 and shall execute deed hypothecating to Government the premises, plants, utensils, etc., together with the stock of raw materials and finished preparations in the warehouse.

(15) That in the case of breach of any of the rules or order referred to in condition (1) above or any of the conditions of the license, or in case of any attempt, by altering the capacity of the receptacles or otherwise to deceive the officer-in-charge of the aforesaid warehouse in any manner by the licensee or by any person employed by him, the licensee will be liable to the penalties prescribed by the rules made from time to time under section 86 of the Bengal Excise Act, 1909, as amended by the Bengal Excise (Amendment) Act, 1914.

Collector.

Counterpart Agreement.

I.....the above-mentioned licensee for myself and my heirs, legal representatives and assignees hereby agree to bind myself to perform and observe all the terms and conditions hereinbefore written and expressed.

Date

Witness

Signature.

B. E. & S. Form No. 4A.

License for the bottling of "Mritasanjibani Sudha" and "Mritasanjibani."

13. E. & S. Form No. 44.

License for the bottling of "Mritasanjibani Sudha" and "Mritasanjibani."

COUNTERFOIL.

Name of district—
No. of license in Register No. 178—
Name of licensee—
Locality where bottling is to be carried on—

No. in Register No. 178 of license in Form No. 28C held by the licensee—
Received the license of which this is the counterfoil.
Signature of the licensee.
Dated.....

(The counterfoil to be signed by the licensee and filed in the Collector's office.)

District.....
Name of licensee.....
Locality where bottling is to be carried on.....

.....resident of.....holding a license for the manufacture, storage in bond and wholesale vend of "Mritasanjibani Sudha" and "Mritasanjibani" is hereby authorised by the undersigned, Collector of.....to bottle the aforesaid preparation in the private warehouse at..... mentioned in his license in Form No. 28C from..... to 31st March.....

It is required of the holder of the license as a condition of its remaining in force that he duly and faithfully perform and abide by the following conditions and by the provision of the Bengal Excise Act of 1909 as amended by the Bengal Excise (Amendment) Act, 1914, and by all notifications and rules which have been or which may from time to time be published or made thereunder, so far as they are applicable to this license :—

(*i*) That he carry on the bottling operation only in the bottling room of the private warehouse mentioned above.

(*ii*) That he bottle the abovenamed preparations at spirit strengths neither exceeding 42 per cent. proof not beyond the limits that may

be fixed by the Excise Commissioner by means of a suitable normal strength and allowable margins.

(*iii*) That except in the case of trade sample intended for free distributions he put up the preparations in only quart and pint bottles and nibs containing not less than 22 ounces per quart and 11 ounces per pint and 6 ounces per nib.

(*iv*) That each bottle bear a label previously approved by the Excise Commissioner and be sealed and capsuled by the licensee to the Commissioner's satisfaction.

(*v*) That he maintains a regular, accurate and up to date account of all bottling operations in a form prescribed by the Excise Commissioner and keep the same in the custody of the officer-in-charge of the private warehouse.

(*vi*) That he removes the bottled preparations to the store room for finished preparations in the warehouse immediately after bottling and labelling, etc.

N. B.—Infraction of any of the above conditions or any of the provisions of the Bengal Excise Act, 1909, as amended by the Bengal Excise (Amendment) Act, 1914, or any of the notification published or rules made thereunder, so far as they are applicable to this license, will subject the licensee to forfeiture of this license as well as of the license in Form No. 28C held by him and to all or any of the penalties prescribed by the law and rule.

Collectorate of

Date

Collector.

Statement showing the working of Messrs.....
. . . .Bonded Warehouse for the month of..... 19 .

I.

1. No. of vessels under fermentation brought forward from the previous month's account.....

2. No. of fermenting vessels set up during the month... .. ..

Total. .....

3. (*a*) No. of fermenting vessels distilled during the month.
(*b*) .....contents of which had to be destroyed.

4. No. of vessels under fermentation at the end of the month... .. ..

5. Bulk gallons of wash distilled during the month.....

6. Quantity (in L. P. gallons) of finished preparations obtained by distillation during the month... .....

7. Total quantity (in L. P. gallons) of finished preparations produced by distillation since the beginning of the year... .....

II.

L. P. Gallon.

1. Quantity of finished preparations in stock at the beginning of the month ...
2. Quantity of finished preparations stored during the month ...
3. Total quantity to be counted for ...
4. Quantity issued on payment of duty to the credit of Bengal ...
5. Quantity issued on payment of duty in Bengal to the credit of other provinces:

Provinces.	L. P. gallons.	Rates of duty
	Total	

6. Quantity issued on payment of duty in other provinces:

Provinces.	L. P. gallons.	Rates of duty
	Total	

L. P. Gallon.

7. Quantity issued for export in bond ...
8. Quantity issued for duty free as sample or otherwise ...
9. Wastage, breakage, etc. ...
10. Total of columns 4-9 ...
11. Balance of finished preparations in hand at the end of the month ...

III.

Rs. as. p.

1. Duty paid to the credit of Bengal during the month ...
2. Total duty paid to the credit of Bengal since the beginning of the year ...
3. Total duty paid to the credit of Bengal during the corresponding period of the last year ...
4. Duty paid in Bengal to the credit of other provinces during the month: –

Provinces.	Challan.	Amounts.

Total.....

Certified that the above statement is correct.
Officer-in-charge

Manager... .. ..'s
Private warehouse.

Date.. .....

Form No. I.

Register of fermentation, distillation and receiver charge for the month of.....19 .

1	Date of setting up wash.	
2	Fermenting vessel No.	
3	Serial No. of fermentation.	
4	Name of the preparation.	
5	Quantity of molasses used.	
6	Quantity of water used.	
7	Original gravity of wash.	
8	Date of distillation.	
9	Bulk of wash after fermentation.	
10	Final gravity of wash.	
11	Details of other fermenting vessels contents of which have to be distilled together with wash in column 9.	No. in column 3.
12		Bulk of fermented wash.
13	Total quantity of fermented wash distilled.	
14	Date and hour of taking charge.	
15	Receiver No.	
16	Dip before colouration and declaration of strength.	
17	Dip after colouration and declaration of strength.	
18	Apparent strength found by hydrometer.	
19	Strength declared by licensee.	
20	Bulk as per column 17.	
21	L. P. gallon as per columns 19 and 20.	
22	Date and hour of issue for bottling.	
23	Remarks.	
24	Initial of officer in-charge.	

Form II.

Register of bottling for the month of.....19 .

1	Date of receiving the preparations for bottling.	
2	From receiver No. store.	
3	Bulk gallons.	
4	Strength per cent. proof.	
5	L. P. gallons.	
6	Name of preparation.	
7	Date of removing the finished preparations to store.	
Details of bottled preparations.	8	Number of quarts.
	9	Number of pints.
	10	Number of nips.
	11	Oz. per qt.
	12	Oz. per pint.
	13	Oz. per nips.
	14	Number of cases.
	15	Bulk gallons corresponding to totals 8—13.
	16	Strength per cent. preparation declared by the licensee.
	17	L. P. gallon.
18	Batch No.	
19	Remarks.	
20	Initial of the Excise Officer.	

Form No. III.

Register of Stock Ledger of bottled finished preparations.

Name of preparation.....

1	Date of storing.																																
2	Batch No.																																
	Details of containers brought into store.								Quantity stored and to be accounted for.						Issues or wastage.						Balance after issue.								Total daily issues.				Total balance in stock.					
3	Number of quarts.								Bulk.						Number of quarts.						Number of quarts.						Remarks.		Date.				Date.				Remarks.	
4	Number of pints.								Strength.						Number of pints.						Number of pints.						Initial of Excise officer.		Duty paid L. P. gallon.				Bulk.				Initial of Excise Officer.	
4a	Number of nibs.								L. P.						Number of nibs.						Number of nibs.								Under bond L. P. gallon.				L. P.					
5	Contents of each quart in oz.								Date of issue.						Case number.						Case number.								Duty free L. P. gallon.									
6	Contents of each pint in oz.								Requisition No. and date.						Bulk.						Bulk.																	
7	Contents of nibs in oz.														L. P.						L. P.																	
8	Case No.																																				
	9	10	11	12	13	14	15	16	17	18	19	20	21	22	23	24	25	26	27	28	29	30	31	32	33	34	35	36										

Form No. IV.

Requisition for issues.

..... 's private warehouse.

Dated .....

To

The Officer-in-charge.

Dear Sir,

The undermentioned issues for $\frac{\text{export}}{\text{transport}}$ are required at..... $\frac{\text{a.m.}}{\text{p.m.}}$

Please arrange accordingly.

Name of preparation.	Batch No.	Actual strength.	No. of quart.	No. of pint.	No. of nips.	Oz. per quart.	Oz. per pint.	Oz. per nips.	Bulk gallon.	L. P. gallon.	Kind of issue.	To whom issued with address.	Amount of duty paid.	Challan No. and date.	No. and date.	Granting authority.	Remarks.
1	2	3	4	5	6	7	8	9	10	11	12	13	14	15	16	17	18

Yours faithfully,

Manager.

Issues under

pass No.....

Dated.....

Officer-in-charge.

Bengal Excise and Salt Department Form No. 19A.

[Paragraph 237, Vol. II.]

License for the sale of medicated wines by Kabiraj or Kabiraji firms.

COUNTERFOIL.

Name of district—

No. of license in Register No. 178—

Name of Kabiraj or Kabiraji firm.

Locality of vend—

Current from
to

Date of license—

Amount of fee paid in advance, Rs. 50/25.

Received the license of which this is the counterfoil and a copy of the general conditions applicable to all Excise and Opium Vend Licenses.

Signature of licensee.

The 19 .

Bengal Excise and Salt Department Form No. 19A.

[Paragraph 237, Vol. II.]

License for the sale of medicated wines by a Kabiraj or Kabiraji firm.

[*Note.—The counterfoil of this license is to be signed by the licensee and filed in the Collector's office.*]

District—
Number of license in register No. 178—
Name of Kabiraj or Kabiraji firm—
Locality of vend—

resident of thana
district and carrying on the business of Kabiraj or Kabiraji firm at
is hereby authorized by the undersigned, Collector of , to sell medicated wines *bona-fide* as
medicines at from to the 31st March 19

It is required of the holder of this license, as a condition of its remaining in force, that he duly and faithfully perform and abide by the following conditions and by the general conditions applicable to all Excise and Opium Vend Licenses hereto annexed :—

I. That he pay to Government, in advance, a fee of Rs. 50/25 and that he pay the same into the Treasury/Sub-Treasury at

II. That he do not alter the nature of any medicated wines or the labels under which he purchased the same, and that he do not reduce the strength of such medicated wines whether by the addition of water or by any other means whatsoever.

III. That he do not sell any medicated wines except in sealed and capsuled bottles having their seals and capsules intact and having a capacity of at least one full reputed pint. Provided that he may sell bottles opened by a competent Excise Officer for purposes of test if re-sealed by such officer.

IV. That the medicated wines sold under this license shall not contain more than 42 per cent. of proof spirit.

V. That he do not sell more than six reputed quart bottles to any person at one time, provided that this condition shall not apply to sales of medicated wines to any chemist or druggist holding an excise license for the sale thereof.

VI. That he do not allow any medicated wine to be consumed on his premises.

VII. That he do not sell or deliver any medicated wine to any child apparently under the age of sixteen years, whether for consumption by such child or by any other person.

*VIII. That he report to the Collector the arrival of every consignment of medicated wines within seven days of its receipt and at least 48 hours before it is opened, stating the description and quantity of such liquor received.

*This condition does not apply to the Calcutta district.

IX. That he do not store any medicated wine to be sold under this license in any premises other than those named herein.

*X. That he do not sell medicated wine at a price below Rs. 4-8 a quart, Rs. 2-4 a pint, and Re. 1-8 a nib.

N.B.—Infraction of any of the above conditions or of the general conditions applicable to Excise and Opium Vend Licenses will subject the holder of this license to forfeiture of the license and to all or any of the penalties prescribed by law or rule.

Collectorate of
The 19 . } *Collector.*

No. 860Ex.—24th August 1936.—In exercise of the power conferred by section 86 of the Bengal Excise Act, 1909 (Bengal Act V of 1909), the Government of Bengal (Ministry of Excise) are pleased to direct that the following amendments be made in the rules published under Government notication No. 601S.R., dated the 30th March 1915, on pages 1-32 of the *Calcutta Gazette Extraordinary* of the 1st April 1915, as subsequently amended, namely:—

Under the heading "closing hours" in rule 201 of the said rules—

(1) *for* the words "Premises for the wholesale sale of foreign liquor or the retail sale of liquor (foreign liquor, country spirit, tari or pachwai)" in paragraph 1 *substitute* the words "Premises for the wholesale or retail sale of foreign liquor"; and

(2) after paragraph II, *add* the following new paragraph:—

"III. Premises for the retail sale of country spirit, tari or pachwai—

(*i*) in Calcutta District—

(*a*) premises for the retail sale of country spirit—9 p.m.,

(*b*) premises for the retail sale of tari —8 p.m.,

(*ii*) in all other districts except Darjeeling and Chittagong Hill Tracts—

(*a*) from 16th March to 15th October —9 p.m.,

(*b*) from 16th October to 15th March —8 p.m."

J. B. KINDERSLEY,

Secy. to the Govt. of Bengal (offg.).

Orders by the Commissioner of Excise and Salt, Bengal.

No. 33Exc.—24th August 1936.—Babu Jasoda Kumar Malaker, temporary Inspector of Excise and Salt, employed on Matches (Excise) work in the district of the 24-Parganas, was allowed leave on average pay for sixteen days, with effect from the 27th June 1936, under rule 81 (*b*) (*ii*) of the Fundamental Rules. He was likely to and actually did return to his old post on the expiry of his leave.

A. S. LARKIN,

Commr. of Excise and Salt, Bengal (offg.).

IRRIGATION DEPARTMENT.

Establishment.

NOTIFICATION.

No. 9.—29th August 1936.—Mr. I. B. De, Executive Engineer, is granted leave on average pay for eleven days, under rule 81(*b*)(*ii*) of the Fundamental Rules, with effect from the 28th July 1936.

H. S. E. STEVENS,

Secy. to the Govt. of Bengal.

BENGAL LEGISLATIVE COUNCIL DEPARTMENT.

NOTIFICATION.

No. 2096L.C.—31st August, 1936.—It is hereby notified in pursuance of rule 14(*9*) of the Bengal Electoral Rules that Mr. Kartick Churn Mullick has been declared under rule 14(*2*) of the aforesaid rules to have been duly elected by the Bengal National Chamber of Commerce Constituency to be a member of the Bengal Legislative Council.

K. ALI AFZAL, *Asst. Secy.*,
for *Secy. to the Bengal Legis. Council*
(*on leave*).

BOARD OF REVENUE, BENGAL.

NOTIFICATION.

Murshidabad.—No. 12070C.P.—26th August 1936.—In exercise of powers conferred by clause (*2*) of section 8 of the Bengal Land Revenue (Assistant Collectors) Regulation, 1821 (IV of 1821), the Board of Revenue authorises Babu Mohini Mohan Chaudhuri, Settlement Kanungo, who has been placed on duty in connection with the maintenance, for the purposes of section 158A of the Bengal Tenancy Act, 1885, of the record-of-rights of the estate of Babu Amarendra Naravan Roy of Jemo in the district of Murshidabad, to exercise and perform within the local limits of the said estate any of the powers and duties vested in the Collectors of Land Revenue under any enactment in force therein for the purpose of the said work of maintenance of the record-of-rights.

S. BANERJEE,

Secy. to the Board of Revenue, Bengal.

TREASURY NOTICE.

Faridpur, the 27th August 1936.

Uncovenanted Deputy Collector Mr. Surendra Nath Bhattacherjee has been placed in executive charge of the Faridpur Treasury from the forenoon of the 27th August 1936, *vice* Babu Birendra Mohan Ghosh, Deputy Collector, and is authorised to draw bills on other treasuries.

B. M. GHOSH, *Dy. Collector-in-charge.*

HIGH COURT NOTICES.

Civil.

NOTIFICATION.

The 29th August 1936.

No. 19871A.—The Joint Magistrates and Deputy Collectors named below, who are posted to the headquarters of the district noted against them and are exercising the powers of a Subordinate Judge, are vested with the powers of a Judge of a Court of Small Causes for the trial of suits cognizable by such a Court up to the value of Rs. 500 within the local limits mentioned against them:—

1. Mr. W. J. Palmer, I.C.S., Dacca—Sadar munsifi of Dacca.

2. Mr. A. K. Ghosh, I.C.S., Midnapore—Sadar munsifi of Midnapore.

By order of the High Court,

E. S. SIMPSON, *Registrar.*

Original Side.

The 24th August 1936.

It is ordered that with effect from 1st January 1937, rule 91, item 13 of Chapter XXXVI of the Rules and Orders of the Calcutta High Court, Original Side, 1914, be amended by substituting the following:—

Copies.

		Rs.	A.	P.
13 (1)	"Every engrossment or fair copy whether written or typed per folio	0	6	0
(2)	Carbon copies, if legible, per folio	0	3	0
(3)	Where typed copies are made independently of each other, per folio	0	6	0
(4)	Lithographed or photographed copy or copies printed for convenience not pursuant to Rules of Court for each necessary copy	0	6	0

Note.—Costs in relation to the preparation of documents and copies thereof shall be minimised as far as possible. It shall be the duty of Attorneys or parties appearing in person to use the most economical process available. The Taxing Officer shall in every case consider what processes could have been utilized, and shall allow the charges for the same at the cheapest rates available in the circumstances of the case.

By order of the High Court,

A. L. COLLET, *Registrar.*

ORDERS BY COMMISSIONERS OF DIVISIONS.

Burdwan Division—Chinsura.

No. 1411M.—25th August 1936.—It is hereby notified for general information, under section 50 of the Bengal Municipal Act of 1932 (XV of 1932), that the Commissioners of the Uttarpara Municipality in the district of Hooghly at a meeting held on the 31st July 1936, duly elected Babu Sachindra Nath Banerjee to be their Vice-Chairman, *vice* Babu Mohanlal Banerjee, granted leave.

No. 5013J.G.—26th August 1936.—Babu Narendra Chandra Kar, Sub-Deputy Collector, Birbhum Sadar, is appointed Circle Officer at Sadar in the same station.

No. 5019J.G.—26th August 1936.—Babu Bata Krishna Mukherjee, Sub-Deputy Collector and Circle Officer, Burdwan Sadar, is granted under Article 8 (*b*) (*ii*) of the Fundamental Rules leave on average pay for forty-one days, with effect from the 7th September 1936.

No. 5024J.G.—26th August 1936.—Babu Nripendra Narayan Som, Sub-Deputy Collector and Circle Officer, Asansol, in the district of Burdwan, is transferred to Midnapore Sadar for employment on general duty. The transfer is made in the public interest.

No. 5030J.G.—26th August 1936.—Babu Dhirendra Nath Mukherji, Sub-Deputy Collector and Circle Officer, Birbhum Sadar, is appointed as Circle Officer, Midnapore Sadar.

No. 5036J.G.—26th August 1936.—Babu Satish Chandra Bose, Sub-Deputy Collector, Midnapore Sadar, is appointed temporarily as Circle Officer, Burdwan Sadar, *vice* Babu Batakrishna Mukherjee granted leave on average pay for forty-one days, with effect from the 7th September 1936.

No. 5065J.G.—28th August 1936.—In accordance with the provisions of rule 63(*2*) of Chapter IV of the Bengal Jail Code, Volume I, I hereby reappoint Babu Birendra Kumar Mallick as a non-official visitor of the Kalna Sub-Jail in the district of Burdwan for a period of two years from the 27th August 1936.

No. 5069J.G.—28th August 1936.—In accordance with the provisions of rule 63(*2*) of Chapter IV of the Bengal Jail Code, Volume I, I hereby reappoint Mr. S. K. Bose as a non-official visitor of the Sadar Jail in the district of Burdwan for a period of two years, with effect from the 20th September 1936.

No. 5085J.G.—28th August 1936.—Babu Jogendra Chandra Banerji, Sub-Deputy Collector, Midnapore Sadar, is granted, under article 81(*b*)(*ii*) of the Fundamental Rules, leave on average pay for thirteen days from 31st October to 12th November 1936 (both days inclusive).

No. 5097J.G.—29th August 1936.—Maulvi Saiyed Abu Saiyid, Sub-Deputy Collector, Midnapore Sadar, is appointed temporarily as Circle Officer of Danton in the same district, *vice* Babu Phanindra Nath Ghosh, granted leave for 41 days from 7th September to 17th October 1936, both days inclusive.

No. 5131J.G.—29th August 1936.—Babu Bidyut Kumar Raha, Sub-Deputy Collector and Circle Officer, Ghatal, in the district of Midnapore, is granted, under rule 81(*b*)(*ii*) of the Fundamental Rules, leave on average pay for one month from the 15th August 1936 or from any subsequent date on which he may be relieved.

L. B. BURROWS, *Commissioner.*

Birbhum, the 26th August 1936.

No. 51L.S-G.—It is hereby notified for general information that, under section 13 of the Bengal Village Self-Government Act, 1919 (Bengal Act V of 1919), read with rule 35 of the rules for the election and appointment of members of union boards, etc., Amir Molla has been duly elected to be a member for Ward No. I of the Banior union board in Nalhati police-station in the Rampur Hat subdivision of the district of Birbhum, *vice* Babu Gopi Ballav Mondal, deceased.

K. B. MALLIK, *for District Magistrate.*

Chittagong Division—Chittagong.

Comilla, the 24th August 1936.

No. 8065M.—It is hereby notified for general information that, under section 13 of the Bengal Village Self-Government Act, 1919 (Act V of 1919), and rule 36 of the rules for election and appointment of members of union boards, Babu Aswini Kumar Bhowmic has been appointed as a member of the Muradnagar union board No. IX of Muradnagar police-station in the Sadar (North) subdivision of the district of Tippera, *vice* Babu Jagat Bandhu Dutta, resigned.

Comilla, the 26th August 1936.

No. 8110M.—It is notified for general information that, under section 13 of the Bengal Village Self-Government Act, 1919 (Act V of 1919), and rule 36 of the rules for election and appointment of members of union boards, Babu Nagar Bashi Das has been appointed as a member of the Fandauk union board No. VII of police-station Nasirnagar in the Brahmanbaria subdivision of the district of Tippera, *vice* Babu Suresh Chandra Ray, deceased.

J. P. RAY, *Addl. District Magistrate.*

Orders by the Deputy Inspector-General of Police, Bakarganj Range.

Barisal.—No. 4158—27th August 1936.—In partial modification of the orders published in the *Calcutta Gazette*, dated the 20th August 1936, under notification—Barisal—No. 3988, dated the 13th August 1936, Sub-Inspector Haji Abdul Majid of Tippera is appointed to act as Inspector, *vice* Maulvi Abdur Rashid, Inspector of that district, granted leave.

This cancels the appointment of Sub-Inspector Manmatha Nath Mitra to officiate as Inspector.

G. H. MANNOOCH,
Deputy Inspector-General of Police (offg.).

Dacca Division—Dacca.

No. 4319J.—24th August 1936.—This office notification No. 3936J., dated the 31st July 1936, posting Babu Mahendra Nath Chaudhuri, Sub-Deputy Collector, to the headquarters station of the district of Mymensingh, is cancelled.

Corrigendum.—No. 4368J.—26th August 1936.—In this office notification No. 3340J., dated the 30th June 1936, publishing the names of the elected members of the local boards, in the district of Mymensingh, published at pages 1706-1708 of Part I of the *Calcutta Gazette*, dated the 9th July 1936, *read* "Moulvi" *for* "Mir" prefixed to the name of A. K. M. Bafatuddin Taluqdar, third name under the heading Jamalpur local board, within the jurisdiction of Madarganj police-station.

Corrigendum.—No. 4433J.—29th August 1936.—In this office notification No. 3744J., dated the 23rd July 1936, establishing a public ferry over the Dolaikhal at Dayaganj between Jatrabari on Dacca-Demra road and Dayaganj, police-station Sutrapur, in the district of Dacca, published at page 1864 of Part I of the *Calcutta Gazette*, dated the 30th July 1936, *for* "Police-station *Tangi*" after Jatrabari *read* "Police-station *Tejgaon*."

W. H. NELSON, *Commissioner.*

Faridpur, the 21st August 1936.

No. 7224J.—It is hereby notified for general information that, under section 13 of the Bengal Village Self-Government Act (Act V of 1919), Munshi Imanuddi Howladar has been duly elected to be a member of the Baligram union board in police-station Kalkini in the Madaripur subdivision of the Faridpur district, *vice* Babu Umakanta Roy Chowdhury, removed.

No. 7226J.—It is hereby notified for general information that, under section 13 of the Bengal Village Self-Government Act (Act V of 1919), Munshi Pailan Khan has been duly elected to be a member of the Jhaudi union board in police-station Madaripur in the Madaripur subdivision of the Faridpur district, *vice* Munshi Adam Khan, deceased.

Faridpur, the 25th August 1936.

No. 7438J.—It is hereby notified for general information that, under section 13 of the Bengal Village Self-Government Act (Act V of 1919), Munshi Dhan Molla has been appointed to be a member of the Gopinathpur union board in police-station Gopalganj in the Gopalganj subdivision of the Faridpur district, *vice* Munshi Daliluddin Kazi, deceased.

Corrigendum.—*For* the name of "Munshi Sadar Shaikh Matbar" as published at page 1745, Part I of the *Calcutta Gazette*, dated 16th July 1936, under notification No. 5571J., dated 6th July 1936, *read* "Munshi Sadu Shaikh Matbar".

Corrigendum.—*For* the name of "Md. Nedhu Sarar" as published at page 1865, Part I of the *Calcutta Gazette*, dated 30th July 1936, under notification No. 6468J., dated 24th July 1936, *read* "Md. Nedhu Sardar".

K. A. L. HILL, *District Magistrate.*

Orders by the Deputy Inspector-General of Police, Dacca Range.

Dacca.—No. 3390.—20th August 1936.—Babu Ashutosh Das Gupta, Inspector, Faridpur, is granted 4 months' leave on average pay with effect from the date from which he is permitted to avail himself of it.

Sub-Inspector Abdul Latif Khan of Dacca is appointed to act as Inspector in the vacancy.

The transfer is made in the interests of public service.

Subadar Pramatha Krishna Santra, Armed Inspector, Faridpur, is temporarily posted to a Circle with effect from the 1st August 1936, *vice* Babu Radha Raman Chatarji, Inspector, Faridpur, temporarily transferred to the Intelligence Branch, Calcutta.

Maulvi Zillur Rahim, officiating Inspector, Dacca, will continue to act as such with effect from the 1st August 1936, *vice* Khan Sahib Mafizuddin Ahmad, Inspector, Dacca, temporarily employed in the District Intelligence Branch, Dacca.

Maulvi Fazlul Haq (Sub-Inspector, E. I. Railway Police, Howrah), officiating Court Inspector, Mymensingh, will continue to act as such with effect from the 1st August 1936, *vice* Babu Pramada Charan Mukharji, Inspector, Mymensingh, temporarily transferred to the Intelligence Branch, Calcutta.

Babu Jitendra Lal Ray Chaudhuri (Sub-Inspector, Mymensingh), officiating Court Inspector, Dacca, will continue to act as such with effect from the 1st August 1936, *vice* Babu Shashadhar Mazumdar, Inspector, Dacca, temporarily employed in the Intelligence Branch, Calcutta.

No. 3497.—27th August 1936.—Maulvi Qazi Azharuddin Ahmad, Inspector, Mymensingh, is granted 1 month and 17 days' leave on average pay with effect from the 1st September 1936 with permission to affix to his leave Sunday, the 18th October 1936, and the Puja holidays from the 19th October 1936 to the 30th October 1936.

Sub-Inspector Syedur Rahman of Mymensingh is appointed to act as Inspector in the above vacancy.

A. D. GORDON,
Deputy Inspector-General of Police.

Presidency Division—Calcutta.

No. 1985R.G.—22nd August 1936.—Babu Subodh Chandra Das Gupta, Sub-Deputy Collector and Colonisation Officer, 24-Parganas, is posted to the headquarters station of that district on being relieved of his present duties.

No. 2016R.G.—25th August 1936.—Babu Sisir Kumar Har, Sub-Deputy Collector, 24-Parganas, is transferred to Sadar, Nadia.

This cancels this office notification No. 1777R.G., dated the 30th July 1936, posting him to Chuadanga, Nadia, as Circle Officer.

No. 2022R.G.—25th August 1936.—Babu Birendra Kishore Kar, Sub-Deputy Collector, Narail, Jessore, is transferred to Chuadanga, Nadia, as Circle Officer.

No. 441J.G.—28th August 1936.—It is hereby notified for general information that, in exercise of the powers conferred on me by rule 63(2) of the Bengal Jail Code, 1919, Volume I, as revised, I appoint Babu Sadhan Kumar Bose and Rai Sahib Harendra Krishna Deb Sarkar to be non-official visitors of the Diamond Harbour Sub-Jail in the district of the 24-Parganas, for a period of two years—the former with effect from the date of this notification and the latter from the 10th September 1936.

No. 2218 L.S.-G.—29th August 1936.—In exercise of the powers conferred upon me by section 25 of the Bengal Local Self-Government Act, III (B.C) of 1885, as amended, I approve the election of the following gentlemen as Chairmen of the local boards named below in the district of Nadia:—

Sadar local board—Maulvi Mahamed Abdul Halim Molla.
Kushtia local board—Maulvi M. Golam Rahaman.
Chuadanga local board—Babu Mrityunjoy Acharyya.
Meherpur local board—M. Abdul Aziz.
Ranaghat local board—Rai Sahib Panchanan Ganguly.

A. J. DASH, *Commissioner.*

Alipore, the 29th August 1936.

Corrigendum.—In notification No. 24/36-9-V. S.-G., dated the 13th August 1936, published at page 1985, Part I of the *Calcutta Gazette*, dated the 20th August 1936, *for* Babu Satish Chandra Bhuina and Munshi Zellan Rahman Khan *read* Babu Satish Chandra Bhuiya and Munshi Zellar Rahman Khan and in notification No. 24/36-10-V. S.-G. of the same date, *for* Munshi Md. Bazlur Rahman, B.A., *read* Maulvi Md. Bazlur Rahman, B.A.

R. GUPTA, *Addl. District Magistrate.*

Bye-election of the Bengal National Chamber of Commerce Constituency of the Bengal Legislative Council.

Calcutta, the 28th August 1936.

As the result of the scrutiny of the ballot papers held on the 28th August 1936, Mr. Kartick Churn Mullick has been elected representative of the Bengal National Chamber of Commerce on the Bengal Legislative Council, *vice* Mr. Surendra Nath Law, deceased.

N. N. LAW, *Returning Officer.*

Orders by the Deputy Inspector-General of Police, Presidency Range.

Calcutta, No. 4810.—24th August 1936.—Babu Hem Chandra Sen, Inspector, Jessore, is granted 4 months' leave on average pay, on medical certificate, in extension of the leave already granted to him.

Maulvi Muhammad Naderazzaman, officiating Inspector, will continue to act as such in the vacancy.

Maulvi Muhammad Nural Husain, officiating Inspector, Nadia, who has been officiating as such, *vice* Babu Sharat Chandra Ghosh, Inspector, retired, will continue to act as such, *vice* Babu Hari Bhushan Banarji, Inspector, temporarily employed in the Intelligence Branch.

Babu Nagendra Nath Sarkar, officiating Inspector, 24-Parganas, will continue to act as such, *vice* Babu Atul Chandra Bhaumik, Inspector of that district, temporarily employed in the Intelligence Branch.

Babu Raj Mohan Chakrabarti, Inspector, E. B. Railway, Sealdah, is granted 2 months and 16 days' leave on average pay, under rule 81(*b*)(*ii*) of the Fundamental Rules, preparatory to retirement, with effect from the date he avails himself of it.

Sub-Inspector Amrita Lal Guha of Jessore is appointed to act as Inspector in the vacancy.

The transfer is effected in the interests of public service.

B. N. BANARJI,

Deputy Inspector-General of Police (offg.).

Rajshahi Division—Jalpaiguri.

No. 4072M.—26th August 1936.—It is hereby notified for general information under section 50 of the Bengal Municipal Act, 1932, that Maulvi Md. Ayub Ali has been duly elected a Commissioner of Ward No. III of the Nawabganj Municipality, *vice* Maulvi Md. Kadir Bux deceased.

No. 3431J.—27th August 1936.—Maulvi A. M. S. Mahmood, Sub-Deputy Collector, Bogra, is appointed temporarily to act as Manager of the Joypur Government Estates in that district.

The transfer is made in the public interest.

No. 4079M.—27th August 1936.—Whereas in Government notification No. 6428 L.S.-G. dated the 19th August 1936, the Muhammadan community in the area under the authority of the district board of Jalpaiguri has been declared to be a minority community for the purposes of section 10A of the Act III of 1885 and as the said community forms 23·93 per cent. of the total population in the district board area, I, therefore, determine, in exercise of the authority vested in me under rule 53A of the Elections Rules under the Local Self-Government Act, that two seats out of ten elected seats in the district board shall be reserved for the minority community.

The minority community having a preponderance in the Sadar local board area I direct that the Sadar local board shall elect members to the two reserved seats.

L. R. FAWCUS, *Commissioner (offg.).*

Rangpur, the 25th August 1936.

No. 5587J.—It is hereby notified for general information that, under section 13 of the Bengal Village Self-Government Act, 1919 (Bengal Act V of 1919), read with rule 35 of the rules for the election and appointment of members of union boards, Munshi Rahimuddin Ahmed of village Pashuram, post office Burirhat Farm, district Rangpur, has been duly appointed to be a member of Pashuram union board within the jurisdiction of the Kotwali police-station in the Sadar subdivision of the Rangpur district, *vice* Munshi Reajuddin Mian, deceased.

S. K. GHOSH, *District Magistrate.*

Orders by the Deputy Inspector-General of Police, Rajshahi Range.

Jalpaiguri.—No. 6142.—21st August 1936.—(*i*) The orders published in the *Calcutta Gazette*, dated the 20th August 1936, under notification Jalpaiguri—No. 5930—dated the 14th August 1936, so far as they relate to the transfers of Babus Ananta Prasad Das and Jitendra Nath Sen II are held in abeyance till December next.

(*ii*) In modification of the orders published in the *Calcutta Gazette*, dated the 20th August 1936, under notification Jalpaiguri—No. 5930—dated the 14th August 1936, Sub-Inspector Haran Chandra Sen of Dinajpur (now employed in the District Intelligence Branch, Jalpaiguri) is temporarily transferred to Rajshahi and is appointed with effect from the date of assuming charge, to act as Inspector, *vice* Maulvi Afazuddin Ahmad, Inspector, granted leave.

The transfer is ordered in the interests of public service.

No. 6286.—28th August 1936.—(*i*) Khan Sahib Jamadar Tahawar Ali, Inspector (Chief Drill Instructor), Police Training College, Sardah, was granted leave on average pay, on medical certificate from 6-7-1936, a.m. to 16-8-1936, a.m.

(*ii*) Armed Sub-Inspector (Drill Instructor) Bhupal Singh of the Police Training College, Sardah, was appointed to officiate as Inspector (Chief Drill Instructor) during the absence on leave, of Khan Sahib Jamadar Tahawar Ali.

E. B. JONES,

Deputy Inspector-General of Police.

Registered No. C207

The Calcutta Gazette

THURSDAY, SEPTEMBER 3, 1936.

PART IA

Orders and Notifications by the Government of India republished for general information.

HOME DEPARTMENT.

NOTIFICATIONS.

JUDICIAL.

Simla, the 20th August 1936.

No. F. 25/3/36.—In pursuance of proviso (i) to sub-section (2) of section 101 of the Government of India Act, the Governor General in Council is pleased to appoint the Hon'ble M. Justice Syed Nasim Ali to act as an Additional Judge of the High Court of Judicature at Fort William in Bengal for the period from the 2nd September up to the 27th October 1936, both days inclusive.

No. F. 25/3/36-I.—In pursuance of proviso (i) to sub-section (2) of section 101 of the Government of India Act, the Governor General in Council is pleased to appoint the Hon'ble Mr. Justice A. G. R. Henderson, I.C.S., to act as an Additional Judge of the High Court of Judicature at Fort William in Bengal for the period from the 30th August 1936 up to the 1st September 1937, both days inclusive.

No. F. 25/3/36-II.—In pursuance of proviso (i) to sub-section (2) of section 101 of the Government of India Act, the Governor General in Council is pleased to appoint the Hon'ble Mr. Justice Roopendra Coomar Mitra to act as an Additional Judge of the High Court of Judicature at Fort William in Bengal for a period of one year with effect from the 30th August 1936.

No. F 25/9/36.—The Hon'ble Sir Harold Derbyshire, Kt., K.C., M.C., Barrister-at-Law, Chief Justice of the High Court of Judicature at Fort William in Bengal, is granted leave on full allowances from the 21st to the 27th August 1936, both days inclusive.

No. F. 25/9/36-I.—Under sub-section (1) of section 105 of the Government of India Act, the Governor General in Council is pleased to appoint the Hon'ble Mr. Justice Manmatha Nath Mukerji, Kt., one of the Judges of the High Court of Judicature at Fort William in Bengal, to perform the duties of the Chief Justice, from the 21st to the 27th August 1936, both days inclusive, during the absence on leave of the Hon'ble Sir Harold Derbyshire, Kt., K.C., M.C., Barrister-at-Law, Chief Justice, or until further orders.

No. F. 25/10/35.—In supersession of the Home Department notification No. F. 25/10/36-Judicial, dated the 1st August 1936, the Honourable Mr. Justice J. Lort-Williams, Kt., K.C., Barrister-at-Law, a Judge of the High Court of Judicature at Fort William in Bengal, has been granted leave from the 8th to the 27th August 1936, both days inclusive, namely, leave on full allowances for 15 days and leave on half allowances for the remaining period.

No. F. 502/36.—In pursuance of clause (*b*) of rule 26 of Order V in the First Schedule to the Code of Civil Procedure, 1908 (Act V of 1908), the Governor General in Council is pleased to declare that the service of any summons issued by a Court in British India under the said Code by Civil Courts in France, Spain, Belgium, Russia, Portugal, Sweden, Japan, Straits Settlements and Ceylon and by the Egyptian Mixed Courts shall be deemed to be valid service.

J. A. THORNE,

Joint Secy. to the Govt. of India.

DEPARTMENT OF COMMERCE.

NOTIFICATION.

TARIFFS.

Simla, the 15th August 1936.

No. 341-T. (22)/36.—In exercise of the powers conferred by sub-section (1) of section 4 of the Indian Tariff Act, 1934 (XXXII of 1934), the Governor General in Council is pleased to direct that the following amendments shall be made in the notification of the Government of India in the Department of Commerce, No. 341-T.-(10)/36, dated the 25th June 1936, namely:—

(1) In the second recital in the preamble to the said notification for the words "Governor General" the words "Governor General in Council" shall be substituted:

(2) To the table annexed to the said notification the following shall be added, namely:—

"48 (9) The following COTTON FABRICS, namely, sateens including italians of sateen weave, velvets and velveteens and embroidered all-overs—		
(*a*) of British manufacture	25 per cent. *ad valorem*	20 per cent. *ad valorem.*

H. DOW,

Addl. Secy. to the Govt. of India.

DEPARTMENT OF INDUSTRIES AND LABOUR.

NOTIFICATION.

Simla, the 18th August 1936.

No. L.-3067.—The following draft of certain rules which the Governor General in Council proposes to make in exercise of the powers conferred by sub-section (*1*) of section 26 of the Payment of Wages Act, 1936 (IV of 1936), read with section 22 of the General Clauses Act, 1897 (X of 1897), is published as required by sub-section (*5*) of section 26 of the first named Act for the information of all persons likely to be affected thereby, and notice is hereby given that the draft will be taken into consideration on or after the 22nd November 1936.

Any objection or suggestions which may be received in respect of the draft before the date specified will be considered by the Governor General in Council.

Draft Rules.

1. *Short Title.*—These rules may be called the Payment of Wages (Procedure) Rules, 1936

2. *Definitions.*—In these rules, unless there is anything repugnant in the subject or context,—

(*a*) "the Act" means the Payment of Wages Act (IV of 1936);

(*b*) "appeal" means an appeal under section 17;

(*c*) "the Authority" means the authority appointed under sub-section (1) of section 15;

(*d*) "the Court" means the court mentioned in sub-section (1) of section 17;

(*e*) "employer" includes the persons responsible for the payment of wages under section 3;

(*f*) "section" means a section of the Act;

(*g*) "Form" means a form appended to these rules;

(*h*) words and expressions defined in the Act shall be deemed to have the same meaning as in the Act.

3. *Form of Application.*—Applications under sub-section (*2*) of section 15 by or on behalf of an employed person or group of employed persons shall be made in duplicate in Form A, Form B or Form C as the case may be, one copy of which shall bear the prescribed court-fee:

Provided that no application presented by an Inspector under the Act shall be required to bear a court-fee.

4. *Authorisations.*—The authorisation to act on behalf of an employed person or persons, under section 15, shall be given by a certificate in Form D and shall bear the prescribed court-fee, shall be presented to the Authority hearing the application and shall form part of the record.

5. *Permission to appear.*—Any person desiring the permission of the Authority to act on behalf of any employed person or persons shall present to the Authority a brief written statement explaining his interest in the matter, and the Authority shall record an order on the statement, which in the case of refusal shall include reasons for the order, and shall incorporate it in the record.

6. *Presentation of applications.*—Any application, or any other document relevant to an application may be presented in person to the Authority at any time during hours to be fixed by the Authority, or may be sent to him by registered post. The Authority shall at once endorse, or cause to be endorsed, on the document the date of the presentation or receipt, as the case may be.

7. *Rejection of application.*—(1) The Authority may refuse to entertain an application presented under rule 3, if after giving the applicant an opportunity of being heard, the Authority is satisfied, for reasons to be recorded in writing that:—

(*a*) the applicant is not entitled to present an application, or

(*b*) the application is barred by reason of the provisions in the provisos to sub-section (*2*) of section 15, or

(*c*) the applicant shows no sufficient cause for making a direction under section 15.

(2) The Authority shall refuse to entertain any application which bears an insufficient court-fee and shall return it at once for representation after the deficit has been made good. The date of such representation shall be taken to be the date of presentation for determining whether an application is presented within the time prescribed by sub-section (*2*) of section 15.

8. *Appearance of parties.*—(1) If the application is entertained, the Authority shall call upon the employer by a notice in Form E, delivered by registered post, to appear before him on a specified date together with all relevant documents and witnesses, if any, and shall inform the applicant of the date so specified.

(2) If the employer or his representative fails to appear on the specified date, the Authority may proceed to hear and determine the application *ex parte*.

(3) If the applicant fails to appear on the specified date, the Authority may dismiss the application:

Provided that an order passed under sub-rule (2) or sub-rule (3) may be set aside and the application reheard on good cause being shown within one month of the date of the said order.

9. *Further inquiry.*—When the Authority considers that a further inquiry is necessary, he shall proceed to make such enquiry or depute such other person as he may deem fit to make the enquiry.

10. *Record of Proceedings.*—(*i*) In a case where no appeal lies, the Authority need not record the evidence, but shall enter the particulars in Form F.

(*ii*) In each case in which an appeal lies, the Authority shall enter the particulars in Form F and, before disposing of the case, shall embody in it the substance of the evidence.

11. *Appeals.*—(1) An appeal shall be preferred in duplicate in the form of a memorandum one copy of which shall bear the prescribed court-fee, setting forth concisely the grounds of objection to the direction and shall be accompanied by a certified copy of that direction.

(2) When an appeal is lodged a notice shall issue to the respondent in Form G.

(3) The Court after hearing the parties and after such further inquiry, if any, as it may deem necessary, may confirm, vary, or set aside the direction from which the appeal is preferred, and shall make an order accordingly.

12. *Inspection of documents.*—Any employed person, or any employer or his representative, or any person permitted under sub-section (*2*) of section 15 to apply for a direction, shall be entitled to inspect any application, memorandum of appeal, or any other document filed with the Authority or the Court, as the case may be, in a case to which he is a party, and may obtain copies thereof on the payment of such fees as may be prescribed.

FORM A.

Form of Individual Application.

[See sub-section (2) of section 15 of the Payment of Wages Act.]

In the Court of the Authority appointed under the Payment of Wages Act (IV of 1936) for ———— area.

Application No.———— of 193

Between A. B. C.

.....applicant:

(through a/an legal practitioner, official of ———— which is a registered trade union.)

And X. Y. Z. .....opposite party.

The applicant states as follows:—

1. A. B. C. is a person employed in/on the factory/railway/industrial establishment entitled ————

————

and resides at ————

The address of the applicant for the service of all notices and processes is:—

————

————

2. X. Y. Z., the opposite party, is the person responsible for the payment of his wages under section 3 of the Act, and his address for the service of all notices and processes is :—

_____

3. (1) The applicant's wages have not been paid for the following wage period(s)

_____

(give dates)

Or A sum of Rs._____has been unlawfully deducted from his wages of..... (amount) for the wage period(s) which ended on.....[give date(s)].

(2) [Here give any further claim or explanation].

4. The applicant estimates the value of the relief sought by him at the sum of rupees _____.

5. The applicant prays that a direction may be issued under sub-section (3) of section 15 for :—

(*a*) Payment of his delayed wages as estimated or such greater or lesser amount as the Authority may find to be due.

Or Refund of the amount illegally deducted.

(*b*) Compensation amounting to .....

The applicant certifies that the statement of facts contained in this application is to the best of his knowledge and belief accurate.

Signature / Thumb impression of the employed person, or legal practitioner, or official of a registered trade union duly authorised.

FORM B.

Form of Group Application.

[See sub-section (2) of section 15 and section 16 of the Payment of Wages Act.]

In the Court of the Authority appointed under the Payment of Wages Act (IV of 1936) for _____area.

Application No. _____of 19 .

Between A. B. C. and †_____others, applicants ;

(through _____ a legal practitioner / an official of which is a registered trade union).

And X. Y. Z. _____, opposite party.

†State the number.

The applicants state as follows :—

1. The applicants whose names appear in the attached schedule are persons employed in / on the factory / railway / industrial establishment entitled

_____

The address of the applicants for service of all notices and processes is_____

_____

2. X. Y. Z., the opposite party, is the person responsible for the payment of wages under section 3 of the Act, and his address for the service of all notices and processes is :—

_____

3. The applicants' wages have not been paid for the following wage period(s) _____

_____

4. The applicants estimate the value of the relief sought by them at the sum of rupees _____.

5. The applicants pray that a direction may be issued under sub-section (3) of section 15 for :—

(*a*) Payment of the applicants' delayed wages as estimated_____ or such greater or lesser amount as the Authority may find to be due.

(*b*) Compensation amounting to_____.

The applicants certify that the statement of facts contained in this application is to the best of their knowledge and belief accurate.

Signature or thumb impression of two of the applicants, or legal practitioner, or an official of a registered trade union duly authorised.

Schedule.

Names of applicants :—

1.

2.

3.

4.

*

*

*

FORM C.

Form of Application by an Inspector or person permitted by the Authority or authorised to act.

[See sub-section (2) of section 15 and section 16 of the Payment of Wages Act.]

In the Court of the Authority appointed under the Payment of Wages Act, 1936, for————area.

Application No.————of 193 .

Between

A. B. C., [(*designation*), an Inspector under the Payment of Wages Act], [*or* a person permitted by the Authority / authorised to act under sub-section (2) of section 15]..... applicant.

And

X. Y. Z.....the opposite party.

The applicant states as follows:—

1. X. Y. Z., the opposite party, is the person responsible under the Act for the payment of wages to the following person(s):—

(1)
(2)
(3)
*
*

2. His address for the service of all notices and processes is:—

3. The wages of the said person(s) due in respect of the following wage periods

have not been paid.
have been subjected to the following illegal deductions:

4. The applicant estimates the value of relief sought for the preson(s) employed at the sum of Rs.————.

5. The applicant prays that a direction may be issued under sub-section (3) of section 15 for:—

(*a*) Payment of the delayed wages as estimated or such greater or lesser amount as the Authority may find to be due.

Or Refund of the amount illegally deducted.

(*b*) Compensation amounting to.....

The applicant certifies that the statement of facts contained in this application is to the best of his knowledge and belief accurate.

Signature.

FORM D.

Certificate of Authorisation.

I / We employed person (s) hereby authorise a legal practitioner / an official of ———— which is a registered trade union to act on my / our behalf under section 15, and section 17 of the Payment of Wages Act (IV of 1936).

Witnesses (1)	Signatures (1)
(2)	(2)
(3)	(3)
(4)	(4)
*	*
*	*
*	*

I accept the authorisation.

Signature.

Legal practitioner.
Official of a registered trade union.

FORM E.

Notice for the disposal of application.

To

Whereas under the Payment of Wages Act, 1936 (IV of 1936) a claim against you has been presented to me in the application of which a copy is enclosed, you are hereby called upon to appear before me either in person, or by any person duly instructed, and able to answer all material questions relating to the application, or who shall be accompanied by some person able to answer all such questions, on the————day of————19 at ————o'clock in the fore / after noon to answer the claim; and as the day fixed for your appearance is appointed for the final disposal of the application, you must be prepared to produce on that day all the witnesses upon whose evidence, and the documents upon which you intend to rely in support of your defence.

Take notice that, in default of your appearance on the day before mentioned, the application will be heard and determined in your absence.

Given under my hand and seal, this——day of————193 .

Seal.

Authority.

FORM F.

Record of Direction.

(*a*) Serial number;

(*b*) Date of the application;

(*c*) Name or names, parentage, address or addresses of the applicants, or some, or all of the applicants belonging to the same unpaid group;

(*d*) Name and address of the employer;

(*e*) Amount claimed as deducted from wages;

(*f*) Amounts claimed as delayed wages;

(*g*) Plea of the employer and his examination (if any);

(*h*) Finding, and, in the case of a direction under sub-sections (3) or (4) of section 15, a brief statement of the reasons therefor;

(*i*) Amounts awarded—

(1) Delayed wages .....

(2) Deducted wages.....

(*j*) the compensation awarded;

(*k*) the penalty imposed;

(*l*) the date on which proceedings terminated.

FORM G.

Notice to respondent of the day fixed for the hearing of the appeal under section 17 of the Payment of Wages Act, 1936.

Appeal from the decision of the Authority for the—— ——area, dated the————day of ————193 .

To

——————————————————

——————————————————

Respondent.

Take notice that an appeal of which a copy is enclosed, from the decision of the Authority for——— ——area has been presented by X. Y. Z. (and others), and registers in this Court, and that the————day of———— 193 , has been fixed by this Court for the hearing of this appeal.

If no appearance is made on your behalf by yourself, or by some one by law authorised to act for you in this appeal, it will be heard and decided in your absence.

Given under my hand and the seal of the Court, this————day of————193 .

Judge.

Seal. Seal of the Court.

A. G. CLOW,
Secy. to the Govt. of India.

Registered No. C207

The Calcutta Gazette

THURSDAY, SEPTEMBER 3, 1936.

PART IB

Educational Notices.

Presidency Division.

Calcutta, the 14th August 1936.

Results of the Final Examinations of the Guru Training and Muallim Training Schools in the Presidency Division, 1936.

ERRATA.

The declaration of the following three candidates as successful at the Guru Training and Muallim Training Examinations, 1936, published in the *Calcutta Gazette* of 9th April 1936, Part IB, page 406-7, is hereby cancelled:—

24-Parganas.

7. Shaikh Golam Kibria of the Basirhat Guru Training School.

Nadia.

1P. Susanta Kumar Mandal—Private.
2P. Md. Azizul (Azizur) Rahman—Private.

ANWAR-UL-QADIR,
for Inspector of Schools, Presidency Division.

Education Department, Bengal.

NOTIFICATION.

Calcutta, the 21st August 1936.

The next Interpretership Examination in Bengali will be held by a Board of Examiners on the 30th November and 1st December 1936 in the room of the Assistant Director of Public Instruction, Bengal, in Writers' Buildings, Calcutta. The oral part will be taken on the first day and the written part on the second day. The time for examination will be as in rule X of the Rules for the Encouragement of the Study of Oriental Languages. Officers under the Government of Bengal who desire to attend the examination and have been duly permitted by the Local Government to appear at the examination should present themselves for examination before the Board of Examiners at 10 a.m. on each of the days mentioned above.

J. M. BOTTOMLEY,
Director of Public Instrn., Bengal.

Board of Intermediate and Secondary Education, Dacca.

Ramna, Dacca, the 13th August 1936.

INTERMEDIATE EXAMINATION (GROUPS A, B, C, D, E), 1938.

FOR ALL GROUPS.

1. ENGLISH.

Archbold and Chatterjee. English Poetry for Indian Students. The following selections, viz. :—

John Milton. Sonnet VII.
John Milton. Sonnet XVI.
S. T. Coleridge. The Rime of Ancient Mariner—Parts I, II, III, IV and VII.
W. Wordsworth. The Solitary Reaper.
W. Wordsworth. The Daffodils.
W. Wordsworth. Written in London, September 1802.
W. Wordsworth. The Reverie of Poor Susan.
Sir Walter Scott. The Last Minstrel.
Byron. On the Castle of Chillon.
P. B. Shelley. Ozymandias of Egypt.
John Keats. To one who has been long in city pent.
John Keats. When I have fears that I may cease to be.
Thomas Hood. The Bridge of Sighs.
Tennyson. Morte de'Arthur.
Browning. Prospice.

Chand Sarma. Modern Short Stories. Blackie & Sons (India), Ltd. The following selections, viz. :—

Scott. Donnerhugel's Narrative.
Dickens. Mr. Minns and his Cousin.
Gaskel. The Squire's Story.
Bret Harte. The Luck of Roaring Camp.
Stevenson. The Adventure of the Hansom Cabs.
Galsworthy. Ultima Thule.

H. W. Fowler. King's English (Abridged) (Oxford University Press) (leaving out Chapters III and IV) is recommended for use by all students.

2. VERNACULAR.

(*a*) *Bengali.*

Muhammad Shahidullah. Adarsha Banga Sahitya. The entire book with the omission of pieces:—Pallisahitya, Pallidrisya, Sahitye Deshbandhu, Barshar Katha.

Saratchandra Chatterjee. Palli Samaj.

Lalitmohan Chatterjea and Charu Bandyopadhyay. Banga Bina. The following pieces only are to be read:—Srishti; Nilgiri; Kalketu; Daridra Fullara; Sitanneshan; Moluar Biday; Kabi; Swadeshi Bhasha; Swadesh; Ajaniter Tan; Debabhas; Matribhasha, Samudra, Madhyanha; Nishitha; Sisur Hashi; Amarata; Jagaranee, Swapna; Bhabapatanga; Bharatlakshmi; Abhisar; Badhu; Putu; Chheler Dal; Ichhamati Nadir Prati; Barshananda; Baisakh; Matir-rahasya; Agra prantare; Sonartari; Pratyabartan; Chhinnamukul; Asamapta.

Books recommended.

J. C. Ghosh. Adhunik Bangla Bhashar Vyakaran. (Presidency Library.)
Rajsekhar Basu. Chalantika.

Books showing the standard up to which students are expected to read :—

Sivanath Shastri. Ramtanu Lahiri O Tatkalin Banga Samaj.
Chandicharan Bandyopadhyay. Bidyasagar.
Bhudev Mukhopadhyay. Paribarik Prabandha.
Rabindranath Tagore. Samaj.
Kazi Emdadul Huque. Abdullah.
Mir Musharraf Hossain. Bishad Sindhu.

(*b*) *Urdu.*

M. A. Hameed. Kainat-i-Adab. (Educational Book House, Aligarh.) The following pages only :—

Prose.

Pages 27-50 (up to para. 3), 65-77, 114-134, 139-147, 264-284, 293-298, 314-316, 330-332.

Poetry.

Pages 150-163 up to Syed Insha.
Pages 175-186 (Zauq and Ghalib).
Pages 206-226, 228-234, 249-250.

(*c*) *Assamese.*

Prose.

Harakanta Baruah. Assam Buranjee, edited by Professor Suryyakumar Bhuyan, published by the Assam Government.
Jnananath Borah. Jugatatta.

Poetry.

Kabita-Kunja. Compiled by Lakhaswar Sarma.
Kumarharan. Sri Chandrabharati, edited by Rai Sahib Durgadhar Barkataki.

FOR GROUP A.

3. English Literature.

Shakespeare. Julius Caesar.
A. S. Collins. Treasury of English Verse, Part II. Modern Poems. (University Tutorial Press, Ltd.) The following selections, viz. :—

Wordsworth. A Perfect Woman.
Wordsworth. Rather a Pagan.
Scott. Coronach.
Coleridge. Kubla Khan.
Lord Byron. She Walks in Beauty.
Lord Byron. Chillon.
Keats. On First Looking into Chapman's Homer.
Keats. Autumn.
Lord Tennyson. Ulysses.
Browning. How they Brought the Good News from Ghent to Aix.
Browning. Prospice.
Stevenson. Requiem.
Thompson. The Kingdom of God.
Newbolt. Vitai Lampada.
Newbolt. Drake's Drum.
Kipling. If.
Yeats. The Lake Isle of Innisfree.
Flecker. The Dying Patriot.
Brooke. The Soldier.

George G. Loane. Selected English Essays. (The King's Treasuries of Literature.) (J. M. Dent & Sons, Ltd.) The following selections, viz. :—

F. Bacon. Of Travel.
F. Bacon. Of Studies.
R. Steele. The Club.
J. Addison. The Meeting of the Club.
J. Addison. Sir Roger At Home.
J. Addison. Will Wimble.
C. Lamb. Christ's Hospital Five and Thirty Years Ago.
C. Lamb. Dream Children.
L. Hunt. Getting up on Cold Mornings.
A. Birrell. Book-Buying.
G. K. Chesterton. A Defence of Nonsense.

Sir W. Scott. Kenilworth (Macmillan's Abridged Edition).

4. HISTORY.

Myers. A Short History of Ancient Times. (Publishers, Ginn & Co., Ltd., 7, Queen's Square, London.)
Myers. A Short History of Mediæval and Modern Times. (Publishers, Ginn & Co., Ltd., 7, Queen's Square, London.)

5. GEOGRAPHY.

No text books are prescribed. The subject is to be studied in accordance with the syllabus. The following books are recommended for guidance:—

Hughes and Gregory. A class-book of Physical and Astronomical Geography.
Smith and Lyde. A Brief Introduction to Commercial Geography (New edition).
Simmons and Richardson. Introduction to Practical Geography.
Elderton, W. A. Maps and Map-drawing.
Herbertson. Senior Geography (Post-war edition).
Lyde. The World (Post-war edition).
Fry. Text-book of Geography. (Post-war edition).
Morrison, C. Our World—A Human Geography.
Unstead and Taylor. General and Regional Geography of the World.
Brooks. Regional Geography.
Dudley Stamps. Intermediate Geography.

6. LOGIC.

No text books are prescribed. The subject is to be studied in accordance with the syllabus. The following books are recommended for guidance:—

Welton and Monaham. Intermediate Logic (Third edition).
Carveth Reade. Logic, Deductive and Inductive.
A. C. Mitra. Principles of Logic, Volumes I and II (Revised edition).
Kalidas Sen. Elements of Logic, Volumes I and II.

7. CHILD PSYCHOLOGY.

No text books are prescribed. The subject is to be studied in accordance with the syllabus. The following books are recommended for guidance:—

Dumville. Child Mind.
Kirkpatrick. Fundamentals of Child Study.
W. W. Pyle. Educational Psychology.
Meyer F. Nimkoff. The Child (Lippincat, Chicago).

8. MATHEMATICS.

No text books are prescribed or recommended. The subject is to be studied in accordance with the syllabus.

9. ECONOMICS.

No text books are prescribed. The subject is to be studied in accordance with the syllabus. The following books are recommended for guidance:—

Penson. Economics of Everyday Life, Parts I and II.
Moreland. Introduction to the Study of Economics for Indian students.
Banerjee. Study of Indian Economics.
Brown and Datta. Elements of Civics, Volume I.

10. SANSKRIT.

Bhatti. Bhatti Kavyam (Canto XII).
Kalidas Raghubansam. (Cantos XIII and XIV) (with Mallinath's Commentary).
Bana Bhatta. Harshacharitam. (Professor V. V. Mirashi's Harsha charitasar) (Ucchasas IV and V.)

Grammar and Composition.

Upendranath Vidyabhushan. Manual of Higher Sanskrit Grammar and Composition, Parts I and II.

11. ARABIC.

Muhammad Irfan (Compiler). Calcutta University Selections (Revised 1935 Edition). (Pieces to be notified later on.)
Muhammad Musa. Kitabul Insha.

Grammar and Composition.

Osman Ghani. Anglo-Arabic Grammar.
A T. M. Obaidullah. Anglo-Arabic Grammar.

12. PERSIAN.

Aga Muhammad Kazim Shirazi (Compiler). Calcutta University Selections (with the omission of the following pages):—

Pages 48-59 (Akbarnama).
Pages 93-102 (Khamsa-i-Nizami).
Pages 112-128 (Zahir-i-Farayabi).
Pages 136-144 (Salman-i-Savaji).

13. BENGALI LITERATURE (FOR WOMAN CANDIDATES).

Surendranath Majumdar. Mahila Kavya.
Michael Madhusudan Dutta. Meghnadbadh-Kabya (Cantos I, II and III).
Rabindranath Tagore. Chayanika. The following selections, viz.—Nirjharer Swapnabhanga, Duranta Asa, Samudrer Prati, Basundhara, Swarga Haite Biday, Ases, Barsha-sesh, Bandi-Bir, Navabarsha, Mukti, Diksha, Nyayadanda, Siksha, Prarthana, Kunri, Pravasi, Bharat Tirtha, Apaman, Pratidan, Jauban, Phanki, Chirantan, Prabhati, Sagarika, Prabhat Utsab, Mangal Giti, Badhu, Sonar Tari, Paras Pathar, Vaisnab Kabita, Dui Pakhi, Jetenahi diba, Sandhya, Ebar Phirao More, Jiban Devata, 1400 Sal, Utsarga (Chaitali), Debatar Biday, Sabhyatar Prati, Tapoban, Prachin Bharat, Didi, Padma, Bangamata, Bhasa O Chanda, Barshamangal, Sarat, Baisakh, Udbodhan, Asarh, Kalyani, Pagal, Sudur, Abartan, Atit, Marandola, Janma Katha, Biday, Agaman, Subha-Kshan, Tyag, Kripan, Sab Payechir Des, Nabin, Sa Jahan, Dui Nari, Balaka, Navabarsha, Mukti (Palataka), Sisu Bholanath.
Rabindranath Tagore. Galpa Guccha, Part II (New Edition). The following selections, viz:—Anadhikar Prabes, Megh O Raudra, Nisithe, Apad, Didi, Subhadristi, Thakurda, Pratihinsa, Kshudhita Pashan, Atithi, Dristidan Phel.
Nirupama Devi. Shyamali.
Bankimchandra Chattopadhyay. Kapal Kundala.

Books recommended.

J. C. Ghosh. Adhunik Bangla Vashar Vyakaran (Presidency Library).
Rajsekhar Basu. Chalantika.

FOR GROUP B.

3. MATHEMATICS.

The same as for Group A.

4. GEOGRAPHY.

The same as for Group A.

5. PHYSICS.

No text books are prescribed. The subject is to be studied in accordance with the syllabus. The following books are recommended for guidance:—

R. L. De. Electricity and Magnetism.
Glazebrooke. Heat.
Glazebrooke. Light.

Watson. Elementary Practical Physics
Hadley. Practical Physics.
Hadley. Everyday Physics.
R. K. De. General Physics and Sounds.
Brown, S. E. Experimental Sceince, I, Physics.
Parsons, L. M. Everyday Science, Part II (for reference).
Rashbihari Basu. First Principles of Physics, Part I.

6. CHEMISTRY.

No text books are prescribed. The subject is to be studied in accordance with the syllabus. The following books are recommended for guidance:—

Partington, J. R. Everyday Chemistry.
Haridas Saha and Kumud Chaudhury. A course of Practical Chemistry for Intermediate Students.
Donington. A class-book of Chemistry, Parts I-IV (Macmillan & Co.).
Newth. Inorganic Chemistry.
Parsons, L. M. Everyday Science, Part III (for reference).
Holmyard. Elementary Chemistry.
H. K. Sen. Introduction to Chemistry (Elementary).

7. BOTANY.

The following books are recommended for use by students in studying the subject in accordance with the syllabus:—

Birbal Sahni and M. Wills. Lowson's Text-books of Botany (Indian Edition).
Rangachariar. A Manual of Elementary Botany for India.
Farmer and Chaudhury. Practical Introduction to the study of Botany.
D. R. Banerjee. Botany for students (latest edition).
A. C. Dutta. A class-book of Botany (Kamala Book Depot, Calcutta).
M. R. Raychaudhury. Intermediate Course of Botany.
I. J. F. Brimble. Everyday Botany.

Reference Book.

G. C. Bose. A Manual of Indian Botany.

FOR GROUP. C.

The list of text books is printed separately.

FOR GROUP D.

3. MATHEMATICS.

No text books are prescribed or recommended. The subject is to be studied in accordance with the syllabus.

4. PHYSICS.

The same as for Group B.

5. CHEMISTRY.

For Inorganic Chemistry, the same as for Group B.
For Organic Chemistry, the following books are recommended for guidance:—

Cohen. A class-book of Organic Chemistry.
Holmyard. Introduction to Organic Chemistry.

6. PRINCIPLES OF DYEING.

No text books are prescribed. The subject is to be studied in accordance with the syllabus. The following books are recommended for reference:—

Knevth, E., Rawson, C., Lowen Thal, R. Manual of Dyeing.
Hubner, J. Dyeing of Vegetable Fibrous Materials.
Hummel, J. Dyeing of Textile Fibres.
Beech, F. Cotton Dyeing.
Beech, F. Wool Dyeing.
Hust, G. Silk Dyeing.
Georgevice, G. Von. The Chemical Technology of the Textile Fibres.
Rai Chaudhuri. The Principles and Practice of Dyeing.

FOR GROUP E.

3. BOOK-KEEPING AND SIMPLE ACCOUNTANCY.

No text books are prescribed. The subject is to be studied in accordance with the syllabus. The following books are recommended:—

Banerji, Book-keeping made Easy, Part II (for Company Accounts only).
Grierson, W. Practical Book-keeping, I.

4. GEOGRAPHY.

No text books are prescribed. The subject is to be studied in accordance with the syllabus. The following books are recommended for guidance:—

Blandford. Rudiments of Physical Geography for Indian Schools.
Unstead and Taylor. Commercial Geography—General and Regional.
Lyde. Man and his Markets.
Lyde. The World (Post-war edition).
Bartholomew and Lyde. Atlas of Economic Geography (for reference).
Chisholm. Hand-book of Commercial Geography.
Mookerjea and Stamp. Essentials of Commercial Geography.
B. B. Mookerjee. Economic Geography of India.

5. METHODS OF BUSINESS AND COMMERCIAL CORRESPONDENCE.

No text books are prescribed. The subject is to be studied in accordance with the syllabus. The following books are recommended for guidance:—

Patton. Commercial Correspondence and Office Routine.
Pitman. Commercial Correspondence.
Govil and Gupta. Commercial Practice, Parts I and II (Gautma Bros., Cawnpore).

6. ECONOMICS.

No text books are prescribed. The subject is to be studied in accordance with the syllabus. The following books are recommended for guidance:—

Clay. Economics for the General Reader.
Banerjee. An introduction to Indian Economics.
Strickland. An Introduction to co-operation in India.
Briggs. Text books of Economics.

7. SHORTHAND.

No text books are prescribed or recommended. Training is to be undergone so as to satisfy the requirements stated in the regulations.

8. COMMERCIAL ARITHMETIC.

No text books are prescribed. The subject is to be studied in accordance with the syllabus. The following book is recommended for guidance:—

Pickering. Commercial Arithmetic

9. COMMERCIAL HISTORY.

No text books are prescribed. The subject is to be studied in accordance with the syllabus. The following books are recommended for guidance:—

R. C. Dutt. Economics History of British India (Chapters 5, 15-17).
K. T. Shaha. Trade, Tariffs and Transport.
Review of the trade of British India, 1930-31, 1931-32.
Cotton. Handbook of Commercial Information for India.

J. N. ROY, *Secretary* (*offg.*).

Board of Intermediate and Secondary Education, Dacca.

Ramna, Dacca, the 13th August 1936.

INTERMEDIATE EXAMINATION, 1938.

GROUP C.

1. ENGLISH.

Archbold and Chatterjee. English Poetry for Indian Students. The following selections, viz.:—

John Milton. Sonnet VII.
John Milton. Sonnet XVI.
S. T. Coleridge. The Rime of Ancient Mariner—Parts I, II, III, IV and VII.
W. Wordsworth. The Solitary Reaper.
W. Wordsworth. The Daffodils.
W. Wordsworth. Written in London, September 1802.
W. Wordsworth. The Reverie of Poor Susan.
Sir Walter Scott. The Last Minstrel.
Byron. On the Castle of Chillon.
P. B. Shelley. Ozymandias of Egypt.
John Keats. To one who has been long in city pent.
John Keats. When I have fears that I may cease to be.
Thomas Hood. The Bridge of Sighs.
Tennyson. Morte de'Arthur.
Browning. Prospice.

Chand Sarma. Modern Short Stories. Blackie & Sons (India), Ltd. The following selections, viz:—

Scott. Donnerhugel's Narrative.
Dickens. Mr. Minns and his Cousin.
Gaskel. The Squire's Story.
Bret Harte. The Luck of Roaring Camp.
Stevenson. The Adventure of the Hansom Cabs.
Galsworthy. Ultima Thule.

H. W. Fowler, King's English (Abridged) (Oxford University Press) (leaving out Chapters III and IV) is recommended for use by all students.

2. VERNACULAR.

Bengali.

Muhammad Shahidullah. Adarsha Banga Sahitya. The entire book with the omission of pieces:—Pallisahitya, Pallidrisya, Sahitye Desbandhu, Barshar Katha.

Saratchandra Chatterjee. Palli Samaj.

Lalitmohan Chatterjea and Charu Bandyopadhyay. Banga Bina. The following pieces only are to be read:—Srishti; Nilgiri; Kalketu; Daridra Fullara; Sitanneshan; Moluar Biday; Kabi; Swadeshi Bhasha; Swadesh; Ajaniter Tan; Debabhas; Matribhasha; Samudra; Madhyanha; Nishitha; Sisur Hashi; Amarata; Jagaranee; Swapna; Bhabapatanga; Bharatlakshmi; Abhisar; Badhu; Putu; Chheler Dal; Ichhamati Nadir Prati; Barshananda; Baisakh; Matirrahasya; Agra prantare; Sonartari; Pratyabartan; Chhinamukul; Asampta.

Books recommended.

J. C. Ghosh. Adhunik Bangla Bhashar Vyakaran. (Presidency Library.)

Rajsekhar Basu. Chalantika.

Books showing the standard up to which students are expected to read:—

Sivanath Shastri. Ramtanu Lahiri O Tatkalin Banga Samaj.
Chandicharan Bandyopadhyay. Bidyasagar.
Bhudev Mukhopadhyay. Paribarik Prabandha.
Rabindranath Tagore. Samaj.
Kazi Emdadul Huque. Abdullah.
Mir Musharraf Hossain. Bishad Sindhu.

Urdu.

M. A. Hameed. Kainat-i-Adab. (Educational Book House, Aligarh.) The following pages only:—

Prose.

Pages 27-50 (up to para. 3), 65-77, 114-134, 139-147, 264-284, 293-298, 314-316, 330-332.

Poetry.

Pages 150-163 up to Syed Insha.
Pages 175-186 (Zauq and Ghalib).
Pages 206-226, 228-234, 249-250.

3. ARABIC.

Poetry.

Busiri. Qasidat-ul-Burdah.
Farazdaq. Qasida on Imam Zain-ul-Abedin.
Diwan-i-Hassan. The following selections only :—

Qafiatul Alif, 32 lines, beginning with * عفت ذات الاصابع فالجواء

Qafiatul Alif, 9 lines, beginning with * اغر عليه للنبوة خاتم

Qafiatul Dal, 6 lines, beginning with * والله راى لا نفارق ماجداً

Qafiatul Dal, 18 lines, beginning with * ما بال عينک لا تنام

Prose.

Badiuzzamanul Hamdani (first 10 makamats).

Rhetoric.

No text books are prescribed. The subject is to be studied in accordance with the syllabus. The following book is recommended for guidance :—

Louis. Ilmul Adab, Part I.

4. FIQH AND USUL.

Fiqh.

No text books are prescribed. The subject is to be studied in accordance with the syllabus. The following books are recommended for guidance :—

Ibrahim Halabi. Multaqal Abhur.
Obaidullah. Sharh-i-Vaqaya.
Muhammad Musa. Almujtaba Fi Sharh-i-Multaqa.

Usul.

No text books are prescribed. The subject is to be studied in accordance with the syllabus. The following books are recommended for guidance :—

Muhammad Ishaq. Sahlul Usul.
Sultan Misri. Khulasatul Usul.

5. QURAN AND HADIS.

Quran.

Al-Quran ul Karim — يسين - الرحمن - الواقعة - الجمعة - المنافقون - الملک - جزعم *

Hadis.

The subject is to be studied in accordance with the syllabus. The following books are prescribed :—

Shaikh Waliuddin. Mishkatul Masabiah.
Shaikh Abdul Haqq Muhaddis. Introduction to Mishquat (Moqaddama).

6. KALAM AND ARABIC LOGIC.

Kalam.

No text book is prescribed. The subject is to be studied in accordance with the syllabus. The following book is recommended :—

Shaikh Ahmad Zayyati. Al Hidayatu Has Siratil Mustaqim.

Arabic Logic.

No text book is prescribed. The subject is to be studied in accordance with the syllabus. The following books are recommended for guidance:—

Molla Najmuddin Katibi. Shamsiah.
Abdullah Yazdi. Sharh-ut-Tahzib.
Muhammad Musa. Taisirul Mantiq.

7. ISLAMIC HISTORY.

Paper I.

Amir Ali. A Short History of the Saracens (1927).

Paper II.

A. J. Toynbee and K. P. Kirkwood. Turkey (The modern world series, published by Earnest Benn, Ltd., London).
The students are not required to possess a detailed knowledge of the diplomatic relations of Turkey.

8. HISTORY.

Myers. A Short History of Ancient Times. (Publishers, Ginn & Co., Ltd., 7, Queen's Square, London.)
Myers. A Short History of Mediæval and Modern Times. (Publishers, Ginn & Co., Ltd., 7, Queen's Square, London.)

9. ENGLISH LITERATURE.

Shakespeare. Julius Caesar.
A. S. Collins. Treasury of English Verse, Part II. Modern Poems. (University Tutorial Press, Ltd.) The following selections, viz:—

Wordsworth. A Perfect Woman.
Wordsworth. Rather a Pagan.
Scott. Coronach.
Coleridge. Kubla Khan.
Lord Byron. She Walks in Beauty.
Lord Byron. Chillon.
Keats. On First Looking into Chapman's Homer.
Keats. Autumn.
Lord Tennyson. Ulysees.
Browning. How They Brought the Good News from Ghent to Aix.
Browning. Prospice.
Stevenson. Requiem.
Thompson. The Kingdom of God.
Newbolt. Vitai Lampada.
Newbolt. Drake's Drum.
Kipling. If.
Yeats. The Lake Isle of Innisfree.
Flecker. The Dying Patriot.
Brooke. The Soldier.

George G. Loane. Selected English Essays. (The King's Treasuries of Literature.) (J. M. Dent & Sons, Ltd.) The following selections, viz.:—

F. Bacon. Of Travel.
F. Bacon. Of Students.
R. Steele. The Club.
J. Addison. The Meeting of the Club.
J. Addison. Sir Roger At Home.
J. Addison. Will Wimble.
C. Lamb. Christ's Hospital Five and Thirty Years Ago.
C. Lamb. Dream Children.
L. Hunt. Getting up on Cold Mornings.
A. Birrell. Book-Buying.
G. K. Chesterton. A Defence of Nonsense.
Sir W. Scott. Kenilworth (Macmillan's Abridged Edition).

J. N. ROY, *Secretary (offg.).*

Office of the Director of Public Instruction, Bengal.

NOTIFICATION.

Calcutta, the 29th August 1936.

Special and Endowed Junior Scholarships, 1936.

The following students are awarded the above scholarships on the results of the Matriculation Examination of Calcutta University held in 1936. The scholarships take effect from 1st June 1936 for two years.

(Principals of Colleges are requested to report to the Director of Public Instruction, Bengal, the names of holders of the scholarships. No scholarship can be drawn until this information is available with respect to every scholarship holder) :—

Twenty-four special scholarships of Rs. 10 a month each for Muhammadans.

Calcutta.

1	Sharfuddin Ahmed	.. Calcutta Madrasah.
2	Md. Mahfuzur Rahman	.. Hare School.
3	Abdul Hamid, II	.. Calcutta Madrasah.
4	Mohammed Usman	.. Hare School.
5	Mohammod Qasimuddin	.. Calcutta Muslim High School.

Presidency Division.

1	Gholam Kibria	.. Khulna Zilla School.
2	Mahammad Moabedul Haque	Dasani Jadunath Institution.
3	Shaikh Tamizuddin Ahmed	.. Budge-Budge P. K. H. E. School.
4	Syed Ahmad Ali	.. Khararia H. E. School.

Burdwan Division.

1	Syed Hamider Rohman	.. Mugkalyan H. E. School.
2	Abdul Hakim	.. Nalhati H. P. H. E. School.
3	S. Nurul Hossain	.. Bolpur H. E. School.

Dacca Division.

1	A. K. Serajul Islam	.. Kishorganj H. E. School.
2	Shah Mohammad Israil Huq	Nagarkanda M. N. Academy.
3	M. Md. Anwar Hossein	.. Goalundo H. E. School.
4	Abdul Hakim Mridha	.. Faridpur Zilla School.

Chittagong Division.

1	Muhammad Amirul Islam	.. Begamganj H. E. School.
2	Majumdar Bazlul Ghani	.. Comilla Zilla School.
3	Md. Habibur Rahman	.. Chandpur Ghani H. E. School.
4	Habibur Rahman	.. Ujanchar J. N. H. E. School.

Rajshahi Division.

1	Mushfequr Rahman Khan	.. Pabna Zilla School.
2	Md. Sekandar Ali	.. Dinajpur Zilla School.
	Md. Sajjad Ali	.. Nawabganj H. M. Institution.
4	Faizuddin Ahmad	.. Nilphamari H. E. School.

Two Amir-i-Kabir scholarships of Rs. 10 a month each.

1	A. F. Kalimullah	.. Calcutta Madrasah.
2	Syed Abdul Halim	.. Ditto.

One Syed Ali Khan Bahadur and Amir-i-Kabir Continuation scholarship of Rs. 10 a month.

K. A. S. M. Abdul Qader .. Calcutta Madrasah.

One Additional Amir-i-Kabir scholarship of Rs. 5 a month.

Mahmud Alam .. Calcutta Madrasah.

Two Nizamat scholarships of Rs. 8 a month each.

1 Md. Jainul Abedin .. Murshidabad Nawab Bahadur's Institution.
2 Syed Azmut Ali Meerza .. Ditto.

Two Brahmamayee Tarasundari and Kripamoyee scholarships of Rs. 10 a month each tenable at the Bethune College, Calcutta.

1 Suprabha Ghosh .. Brahmo Girls' School.
2 Anima Bagchi .. Ditto.

Two scholarships of Rs. 10 a month each for the educationally backward classes.

1 Asokranjan Barua .. Chittagong J. M. Sen's Institute.
2 Kshitimohan Ray .. Pabna Zilla School.

Three scholarships of Rs. 10 a month each for the educationally backward classes tenable in any approved institution in Bengal only.

1 Binaybhushan Mandal .. Jaynagar Institution.
2 Rasamay Malakar .. Khulna B. K. Union Institution.
3 Jnanendranath Mandal .. Bagerhat H. E. School.

J. M. BOTTOMLEY,
Director of Public Instruction, Bengal.

Office of the Director of Public Instruction, Bengal.

NOTIFICATION.

Calcutta, the 29th August 1936.

Special Junior Scholarships for Muhammadans, 1936.

The following students are awarded the above scholarships on the results of the Matriculation Examination of Calcutta University held in 1936. The scholarships are tenable in any approved educational institution in Bengal only for two years, with effect from 1st July 1936.

(Principals of Colleges are requested to report to the Director of Public Instruction, Bengal, the names of holders of the scholarships as soon as they are admitted. No scholarship can be drawn until this information is available with respect to every scholarship-holder) : –

Nine special scholarships of Rs. 10 a month each.

Calcutta.

Atiquz Zaman Khan .. Calcutta Madrasah.

Presidency Division.

Md. Elias Ali Mollah .. Harinavi A. S. School.

Burdwan Division.

Syed Abdul Momen .. Katwa Kasiramdas Institution.

Dacca Division.

1 Md. Shamsuzzuha .. Nawabganj High English School.
2 Mohamed Muslim .. Bhola Government High English School.

Chittagong Division.

1 Farid Uddin Khan .. Salimganj Abdur Rouf High English School.
2 Syed Saifuddin Khaled .. Chittagong Collegiate School.

Rajshahi Division.

1 Md. Abdul Mannan .. Serajganj B. L. H. E. School.
2 Md. Makbul Hossain .. Paksey Chandraprabha Vidyapitha.

J. M. BOTTOMLEY,
Director of Public Instruction, Bengal.

Office of the Director of Public Instruction, Bengal.

NOTIFICATION.

Calcutta, the 29th August 1936.

Mohsin Stipends, 1936.

The following students are awarded the above stipends on the results of the Matriculation Examination of Calcutta University held in 1936. *The stipends take effect from 1st July 1936 for one year and eleven months.*

(Principals of Colleges are requested to report to the Director of Public Instruction, Bengal, the name of holders of the stipends as soon as they are admitted. No stipend can be drawn until this information is available with respect to every stipend-holder) :—

One special stipend of Rs. 10 a month for Shia students.

Khulya Meah .. Raozan Aryamaitreya Institution.

One special stipend of Rs. 5 a month for natives of Hooghly town.

Shaikh Mohammad Naqui .. Hooghly Branch School.

Forty stipends of Rs. 5 a month each.

Presidency Division (including Calcutta).

1	Shaukat Ali Mallick	..	Chuadanga V. J. H. E. School.
	Md. Zahural Haq Mozumdar		Kalabaria H. E. School.
3	S. M. Abdul Aziz	..	Daulatpur H. E. School.
4	Abdur Rahman Khan	..	Matiaburj H. E. School.
5	Abdul Musabber Joarder	..	Kushtia H. E. School.
6	Md. Qasem Ali	..	Bhangar H. E. School.
7	Sk. Nazir Ahmed	..	Matiaburj H. E. School.
	Ansaruddin Ahmed	..	Shikarpur H. E. School.
9	Rahmatullah	..	St. Anthony's High School.

Burdwan Division.

1	Shaikh Mainuddin Ahmed	..	Howrah Zilla School.
2	Md. Motiar Rahman	..	Patuli H. E. School.
3	Md. Dowan Ali Nazir	..	Bagnan H. E. School.
4	Shaikh Arshed	..	Kusumgram Tayebba Institution.
5	Sheikh Mahammad Hadis	..	Kulti MacLellan Institution.

Dacca Division.

1	Syed Abdul Wazed	..	Barisal Zilla School.
2	Md. Hasan Ali	..	Mathbaria K. M. L. Institution.
3	Abdul Hamid Akon	..	Bhanga H. E. School.
4	Ataur Rahman Khan	..	Tangail Bindubasini High School.
5	Mohammad Moslem Mia	..	Bhandaria Vehari Institution.
6	Lutfur Rahman	..	Barisal A. K. Khan Institution.
7	Syed Matiur Rahoman	..	Shibpur H. E. School.
8	Md. Shuja-at Ali	..	Narayanganj I. E. T. High School.
9	Obaydullah Ahmad	..	Netrakona Anjuman High School.

Chittagong Division.

1	Abdus Satter	..	Chittagong Government Muslim High School.
2	Abdul Majid Mia	..	Nabinagar H. E. School.
3	Syed Ahmedul Huq	..	Mahamuni Anglo-Pali Institution.
4	Mofizul Islam	..	Brahmanbaria George H. E. School.
5	Ali Ahmad Chowdhuri	..	Brahmanbaria Annada H. E. School.
6	Jinnat Ali	..	Baburhat H. E. School.
7	Keramat Ali Chowdhory	..	Comilla Zilla School.
8	Sultan Ahmad Khan	..	Matlabganj J. B. H. E. School.

Rajshahi Division.

1	Hatem Ali Ahmad	..	Bogra Zilla School.
	Syeda Ayuba Kazi	..	Jalpaiguri Girls' H. E. School.
3	Saleh Ahmed Khan	..	Pabna Zilla School.
4	Afazuddin Sarkar	..	Arani Monomohini H. E. School.
5	Aminul Haque Biswas	..	Malda Zilla School.
6	Majid Ali Khondker	..	Bogra Coronation Institution.
7	Syed Maqsood Ahmad	..	Darjeeling Government High School.
8	Ibrahim Hossain Mondal	..	Khanjanpur H. E. School.
9	S. M. Faizul Huq	..	Serajganj B. L. H. E. School.

J. M. BOTTOMLEY,

Director of Public Instruction, Bengal.

Office of the Director of Public Instruction, Bengal.

NOTIFICATION.

Calcutta, the 28th August 1936.

Mohsin Scholarships and Stipends, 1936.

The following students are awarded the above scholarships and stipends on the combined results of the Intermediate Examinations in Arts and Science of Calcutta University held in 1936. *The scholarships and stipends take effect from 1st July 1936 for one year and eleven months.*

(Principals of Colleges are requested to report to the Director of Public Instruction, Bengal, the names of holders of the scholarships and stipends as soon as they are admitted. No scholarship or stipend can be drawn until this information is available with respect to every scholarship or stipend-holder) :

Five Mohsin scholarships of Rs. 10 a month each.

Presidency Division (including Calcutta).

Mahammed Hossain .. Berhampur K. N. College.

Burdwan Division.

Khandakar Mohammad Zakaria .. Burdwan Raj College.

Dacca Division.

Khan Muhammad Salek .. Barisal B. M. College.

Chittagong Division.

Muhammad Ayub Khan .. Chittagong College.

Rajshahi Divison.

Abul Ahsan .. Rajshahi College.

One special stipend of Rs. 10 a month for Shia students.

M. Ali Mirza Isfahani .. St. Xavier's College.

Twenty Mohsin stipends of Rs. 5 a month each.

Presidency Division (including Calcutta).

1 Md. Abdur Rahaman .. Islamia College.
Md. Zainul Abedin .. Non-collegiate student (Islamia College).
3 Shaikh Abdur Rahman .. Islamia College.
4 Mofizuddin Ahmed .. Non-collegiate student (Islamia College).
Raisuddin Hyder .. Ditto.

Burdwan Division.

1	Md. Muniruzzaman	..	Hooghly College.
	Ahammad Hossain Mallik	..	Ditto.
3	Mohammad Idris Hossain	..	Burdwan Raj College.

Dacca Division.

1	Khandkar Sakawat Hossain	..	Karatia Saadat College.
2	Ghyas Uddin Khan	..	Mymensingh A. M. College.
3	Md. Abdul Mannan	..	Karatia Saadat College.
4	Md. Abdus Samad, I	..	Mymensingh A. M. College.

Chittagong Division.

1	Mir Faiz Ahmad	..	Chittagong College.
2	Mahammad Abdul Karim	..	Comilla Victoria College.
	Md. Salamat Ullah	..	Ditto.

Rajshahi Division.

1	Md. Sujanuddin Biswas	..	Rajshahi College.
2	Badrul Huda Khan	..	Non-collegiate student (Rangpur Carmichael College).
	Mohammad Abdul Hye	..	Pabna Edward College.
4	Abul Hassan Mohammad Qamrul Haq ..	..	Rajshahi College.
5	Sharifuddin Ahmed	..	Rangpur Carmichael College.

J. M. BOTTOMLEY,

Director of Public Instruction, Bengal.

Office of the Director of Public Instruction, Bengal.

NOTIFICATION.

Calcutta, the 28th August 1936.

Subject to the usual conditions of good conduct and satisfactory progress, the Fuller Memorial Continuation Scholarship of Rs. 25 a month is awarded to Md. Ahsanullah, who passed the Intermediate Examination of the Board of Intermediate and Secondary Education, Dacca, held in 1936 from the Dacca Intermediate College.

The scholarship is tenable at the University of Dacca for a period of two years with effect from 1st July 1936.

The scholar must reside in the Muslim Hall of Dacca University.

J. M. BOTTOMLEY,

Director of Public Instrn., Bengal.

Bengal Engineering College.

The 28th August 1936.

Under the authority of the Government of Bengal an examination called the "Bengal Local Bodies' Accountants' Examination" will be held at the Bengal Engineering College, Botanic Garden post office, Howrah, on Monday, the 18th January 1937, and the following two days, concurrently with the Divisional Accountants' Examination.

No candidate will be admitted to the Bengal Local Bodies' Accountants' Examination unless he is over 24 years of age and thus ineligible to appear at the Divisional Accountants' Examination.

For the prospectus, application should be made to the Principal, Bengal Engineering College, post office Botanic Garden, Howrah.

C. R. COPELAND, *Officer-in-charge.*

Orders by the Vice-Chancellor and Syndicate of the Calcutta University.

Senate House, the 3rd September 1936.

I. The undermentioned candidates are declared to have passed the Preliminary Examination in Law held in July 1936 :—

FIRST DIVISION.

(In order of merit.)

Ripon Law College.

1 Sengupta, Manindranath.

University Law College.

2 Bagchi, Satyendranath.

Non-collegiate student (Registered No. 6983 of 1925-26.)

3 Bhattacharyya, Prabodhchandra.

Ripon Law College.

4 Deb, Ramkrishnasaran.

University Law College.

Konar, Chittaranjan.
6 { Bhattacharyya, Debaprasad.
Ray, Santoshchandra.

Ripon Law College.

8 Bhattacharyya, Syamadas.

University Law College.

9 { Chakrabarti, Sailendranath.
Chattopadhyay, Susilchandra.

Ripon Law College.

11 Basu, Anukuschandra.

University Law College.

Chattopadhyay, Prabuddhanath.
Mukhopadhyay, Bhupendranath.

Ripon Law College.

Ray, Goposchandra.

University Law College.

15 Sen, Binaybihari.

Non-collegiate student (University Law College).

Bishnu Dutt.

University Law College.

17 Basumallik, Rabindranath.
18 Bandyopadhyay, Amarendranath, I.
19 Chakrabarti, Sukumar.
20 Bandyopadhyay, Nikhilchandra.

Non-collegiate student (University Law College).

Pradhan, Manikchand.

Non-collegiate student (Registered No. 6685 of 1928-29.)

Raychaudhuri, Debprasanna.

University Law College.

23 Gangopadhyay, Narayanchandra.

SECOND DIVISION.

(In alphabetical order.)

Ripon Law College.

A. B. M. Jalaluddin.
Abu Fayez Syed Mahammad Azizul Huq.

University Law College.

Abul Husain Chowdhury.

Ripon Law College.

Adhikari, Bibhutibhushan.

Non-collegiate student (Earle Law College, Gauhati).

Aditya, Pramodkumar.

Non-collegiate student (Ripon Law College).

Amanat Ali.

University Law College.

Bagchi, Jitendranath.

Non-collegiate student (Registered No. 8435 of 1933-34).

Bandyopadhyay, Amarendranath.

Ripon Law College.

Bandyopadhyay, Amiyakumar.

University Law College.

10 Bandyopadhyay, Amiyakumar, I.

Non-collegiate student (University Law College).

Bandyopadhyay, Arun.

University Law College.

Bandyopadhyay, Batakrishna.

Non-collegiate student (Registered No. 4641 of 1929-30).

Bandyopadhyay, Bhabani.

Ripon Law College.

Bandyopadhyay, Bireswar.

Non-collegiate student (University Law College).

Bandyopadhyay, Byomkes.

Ripon Law College.

Bandyopadhyay, Kalicharan.

University Law College.

Bandyopadhyay, Karunakiran.
" Sisirranjan.

Non-collegiate student (University Law College).

Bandyopadhyay, Smarajit.

University Law College.

20 Basu, Anandamay.
" Ardhendubhushan.
" Bidyutbikas.

Non-collegiate student (University Law College).

Basu, Buddhagopal.

University Law College.

Basu, Debendranath.

Non-collegiate student (University Law College).

Basu, Dwijendramauli.

University Law College.

Basu, Himansusekhar.

Ripon Law College.

Basu, Jyotishchandra.

University Law College.

Basu, Kamakhyacharan.

Ripon Law College.

Basu, Manasranjan.
30 ,, Niradkumar.

University Law College.

Basu, Nirmalkumar.

Ripon Law College.

Basu, Ramnarayan.

University Law College.

Basu, Sahasransu.
,, Santoshkumar.
,, Satyabrata.
,, Satyendranath.
,, Saudhendrakumar.
,, Sibendranath.

Non-collegiate student (Registered No. 7756 of 1934-35).

Basuchaudhuri, Parimalkanta.

Ripon Law College.

40 Batabyal, Dhirendranath.

Non-collegiate student (University Law College).

Bhagwan Chandra Mehta.

Non-collegiate student (Registered No. 2755 of 1931-32).

Bhanja, Radhagobinda.

Non-collegiate student (Registered No. 2927 of 1923-24).

Bhattacharyya, Abinaschandra.

Non-collegiate student (University Law College).

Bhattacharyya, Arunkumar.

Non-collegiate student (Registered No. 612 of 1931-32).

Bhattacharyya, Nareschandra.

University Law College.

Bhattacharyya, Sachindrakumar.
,, Sasindranath.
,, Suddhabrata.

Ripon Law College.

Bhaumik, Hajarikanta.

University Law College.

50 Biswas, Rathindrakumar.
,, Sailendraprasad.

Ripon Law College.

Biswas, Suhritchandra.

University Law College.

Biswas, Susilkumar.

Ripon Law College.

Biswas, Syamapada.

Earle Law College, Gauhati.

Bujarbarua, Jitendranath.

University Law College.

Chakrabarti, Amiyamohan.

Non-collegiate student (University Law College).

Chakrabarti, Bimalchandra.

Non-collegiate student (Registered No. 4080 of 1931-32).

Chakrabarti, Bimalendu.

University Law College.

Chakrabarti, Himansukumar.

Ripon Law College.

60 Chakrabarti, Jatindranath.
Chakrabarti, Kanailal.

Non-collegiate student (Registered No. 6330 of 1932-33).

Chakrabarti, Pramathamohan.

Earle Law College, Gauhati.

Chakrabarti, Purnendunath.

University Law College.

Chakrabarti, Radhanath.

Non-collegiate student (Registered No. 6409 of 1928-29).

Chakrabarti, Saritkumar.

Ripon Law College.

Chakrabarti, Subodhchandra.

University Law College.

Chakrabarti, Sudarsan.
,, Sudhansusekhar.
,, Sureschandra.

Non-collegiate student (Registered No. 8359 of 1933-34).

70 Chakrabarti, Taraprasad.

University Law College.

Chandra, Banamali.
Chattopadhyay, Ajitkumar.

Non-collegiate student (Registered No. 1584 of 1928-29).

Chattopadhyay, Amulyaratan.

Non-collegiate student (Registered No. 2149 of 1929-30).

Chattopadhyay, Anilchandra.

University Law College.

Chattopadhyay, Bhupendranath.
,, Bijaychandra.
,, Bimalkumar.
,, Binayendranath.

Non-collegiate student (University Law College).

Chattopadhyay, Birendranath.

University Law College.

80 Chattopadhyay, Biswanath.

Non-collegiate student (University Law College).

Chattopadhyay, Durgadas.

University Law College.

Chattopadhyay, Gaurangakanti.
,, Harigopal.

Non-collegiate student (University Law College).

Chattopadhyay, Hrishikes.

University Law College.

Chattopadhyay, Jyotsnalal.
,, Kshetrasadhan.

Ripon Law College.

Chattopadhyay, Niranjankumar.

University Law College.

Chattopadhyay, Sailendranath.

Ripon Law College.

Chattopadhyay, Saktipada.

University Law College.

90 Chattopadhyay, Santikumar.

Ripon Law College.

Chaudhuri, Asitranjan.

Non-collegiate student (Registered No. 1318 of 1926-27).

Chaudhuri, Ganeschandra.

University Law College.

Chaudhuri, Sailendranath.

Non-collegiate student (Registered No. 3599 of 1927-28).

Chaudhuri, Subodh.

University Law College.

Chaudhuri, Subodhgobinda.
Chiranjilal Jhunjhunwala.
Das, Amarendranath.

Ripon Law College.

Das, Anantakumar.
,, Asaprasun.

Non-collegiate student (Registered No. 2395 of 1930-31).

100 Das, Binaykumar.

Non-collegiate student (Registered No. 2972 of 1929-30).

Das, Niradbandhu.

University Law College.

Das, Nrisinhaprasad.

Earle Law College, Gauhati.

Das, Prangopalchandra.
,, Rampada.

University Law College.

Das, Sasankasekhar.

Ripon Law College.

Das, Sudhánsubhushan.

University Law College.

Dasgupta, Debendrakumar.

Non-collegiate student (Registered No. 3333 of 1928-29).

Dasgupta, Dhirendrachandra.

Non-collegiate student (Registered No. 1587 of 1927-28).

Dasgupta, Kunjalal.

Non-collegiate student (Registered No. 6028 of 1929-30).

110 Dastidar, Dwijendranath.

Non-collegiate student (Registered No. 7398 of 1931-32).

Datta, Adwaitacharan.

University Law College.

Datta, Amiyakrishna.

Non-collegiate student (Registered No. 3391 of 1926-27).

Datta, Ardhendusekhar.

University Law College.

Datta, Ganeschandra.
,, Kalikumar.

Non-collegiate student (Registered No. 5323 of 1931-32).

Datta, Parimalchandra.

Ripon Law College.

Datta, Phanindranath.
,, Prabhatkumar.

University Law College.

,, Saurindramohan.
120 ,, Sunilkumar.

Ripon Law College.

,, Susilchandra.

Non-collegiate student (Registered No. 4095 of 1931-32).

De, Anilkumar.

University Law College.

De, Digendrachandra.
,, Kapilchandra.

Ripon Law College.

De, Prasantakumar.

University Law College.

Deb, Brajendranath.

Fazlul Haque.

Ripon Law College.

Gangopadhyay, Jnanranjan.

University Law College.

Gangopadhyay, Mihirlal.
130 ,, Srijitkumar.

Ripon Law College.

Ghosh, Amalendu.

University Law College.

Ghosh, Amalkumar.
,, Harindralal.
,, Gopalkrishna.

Ripon Law College.

Ghosh, Jibaneswar.

University Law College.

Ghosh, Lokendranath.
,, Rabindranath.

Ripon Law College.

Ghosh, Sachindralal.

University Law College.

Ghosh, Satyabrata.
140 ,, Sibdas.
,, Sudhirkumar, II.

Ripon Law College.

Ghosh, Sunilkumar.

Non-collegiate student (Registered No. 8572 of 1934-35.)

Ghosh, Susilkumar.

University Law College.

Ghosh, Tridibchandra.
Ghoshal, Krishnadhan.
,, Satyaprasad.

Non-collegiate student (University Law College).

Ghoshchaudhuri, Rameswar.

Ripon Law College.

Giri, Hrishikes.
Golam Mahiuddin Ahmed.

University Law College.

Goswami, Jnanendubikas.
Govinda Ram Kedia.

Non-collegiate student (University Law College).

Guha, Praphullakumar.

University Law College.

Gupta, Amarendranath.
,, Kalyankumar.
,, Manojendranath.
,, Ramendranath.
Hajra, Amarnath.

Ripon Law College.

Hati, Kamalapada.

Non-collegiate student (Ripon Law College).

Jha, Maheschandra.

University Law College.

Jhar Khande Roy.

Ripon Law College.

Joardar, Jagadananda.

University Law College.

Jwala Prasad.

Non-collegiate student (University Law College).

K. V. Chalapati Rao.

Non-collegiate student (Registered No. 2551 of 1931-32.)

Kanjilal, Gopalchandra.

University Law College.

Kar, Amalendralal.
Lahiri, Kalidas.

Non-collegiate student (University Law College).

Maji, Krishnachandra.

Ripon Law College.

Majumdar, Manindrakumar.

University Law College.

Mallik, Sukumar

Ripon Law College.

Mandal, Debdas.

University Law College.

Mandal, Satyanarayan.
Mannulal Kejirwal.

Ripon Law College.

Md. Abdul Ali.
Md. Aftab Uddin Khan.

Non-collegiate student (University Law College).

Misra, Sureschandra.

Ripon Law College.

Mitra, Anindyasundar.
,, Jnanhari.

Non-collegiate student (University Law College).

Mitra, Kalisadhan.
,, Kalyanananda.

Ripon Law College.

Mitra, Kiranchandra.

University Law College.

Mitra, Nisithchand.
,, Sudhirkumar.
,, Tarapada, II.

Ripon Law College.

Moksood Ali.
Muhammad Wais.

University Law College.

Mukhopadhyay, Amarendranath.
,, Anileswar.
,, Binaybhushan.
,, Hemantakumar.
,, Hemendranath.
,, Nalinbihari.

Ripon Law College.

Mukhopadhyay, Rabindranath.
,, Sachindranath.

University Law College.

Mukhopadhyay, Samarendranath.

Ripon Law College.

Mukhopadhyay, Santoshkumar.

University Law College.

Mukhopadhyay, Somendramohan.

Non-collegiate student (University Law College).

Mukhopadhyay, Tikendrajit.

University Law College.

Mukhopadhyay, Upendranarayan.

Earle Law College, Gauhati.

M. Zahirul Hussain.

Ripon Law College.

Nag, Birendrakumar.

University Law College.

Nagchaudhuri, Sunilkumar.

Non-collegiate student (Registered No. 2714 of 1930-31.)

Nandi, Sukumar.

Ripon Law College.

Nath, Manomohan.

University Law College.

Niyogi, Himansukumar.
P. I. Ramanujam.
P. Muraleedhara Menon.
Pain, Satyacharan.
Pal, Asokkumar.
,, Gauriprasad.

Non-collegiate student (Registered No. 7218 of 1932-33).

Pal, Praphullaranjan.

University Law College.

Pal, Sasankasekhar.
,, Satyagopal.
Phukan, Jibanram.

Ripon Law College.

Quazi Najibur Rahman.

Non-collegiate student (Registered No. 1716 of 1930-31).

Raha, Debabratadas.

Non-collegiate student (University Law College).

Raj Vanshi Singh.
Ray, Arabinda.

University Law College.

Ray, Dhirendranath.

Non-collegiate student (Registered No. 3541 of 1928-29).

Ray, Dineschandra.

University Law College.

Ray, Hemantakumar.
,, Manasranjan.

Non-collegiate student (University Law College).

Ray, Nandalal.

University Law College.

Ray, Pramadasundar.
,, Praphullakumar.
,, Prithwikumar.
,, Rammath.
,, Sachindrakumar.

Ripon Law College.

Ray, Sachindranath.
,, Sharendranarayan.
,, Sridharchandra.
,, Sudhansukumar.

University Law College.

Ray, Sudhiskumar.

Ripon Law College.

Ray, Sukharanjan.

University Law College.

Ray, Syamalendramohan.
Raybarma, Hemantakumar.

Non-collegiate student (Registered No. 6925 of 1931-32).
Raychaudhuri, Dineschandra.

University Law College.

Raychaudhuri, Kshitischandra.

Non-collegiate student (Registered No. 3128 of 1931-32).

Raychaudhuri, Nirmalchandra.

University Law College.

Rudrasarkar, Samareschandra.

Saha, Nisikanta.
,, Taraprasanna.

Non-collegiate student (University Law College).

Sain, Nityananda.

University Law College.

Sajidul Huque.

Ripon Law College.

Santra, Biswanath.
Sarbajna, Jyotischandra.
Sardar, Panchunnohan.

Non-collegiate student (Registered No. 8355 of 1934-35).

Sarkar, Anischandra.

University Law College.

Sarkar, Asitkumar.
,, Biswanath.
,, Sudhirchandra.
Sarma, Homchandra.
,, Nirmaleswar.

Earle Law College, Gauhati.

Sarmabarthakur, Radhanath.

Non-collegiate student (University Law College).

Sarwan Prasad Singh.

Ripon Law College.

Sen, Aghornath.
,, Amulyakumar.

University Law College.

Sen, Bimanbihari.

Non-collegiate student (Registered No. 1858 of 1930-31).

Sen, Binaybhushan.

University Law College.

Sen, Binaykumar.
,, Harendranath.
,, Hirendranath.
,, Niradbaran.

Ripon Law College.

Sengupta, Kesabchandra.
,, Subodhkumar.

Non-collegiate student (Registered No. 4326 of 1927-28).

Sengupta, Syamalendu.

University Law College.

Shantimal Mehta.

Ripon Law College.

Sikdar, Kalipada.

Non-collegiate student (University Law College).

Sil, Bhupenranath.
Sinha, Anandaprasad.

Ripon Law College.

270 Sinha, Praphullakumar.
" Rajbansi.

Non-collegiate student (Ripon Law College).

Sk. Kaisar Ali Nazir.

Non-collegiate student (Registered No. 2488 of 1933-34).

Som, Nalinibhushan.

University Law College.

Syed Muazzam Hussain.

Non-collegiate student (University Law College).

Tagore, Arunendranath.

University Law College.

Thakur, Akshaykumar.

Non-collegiate student (University Law College).

V. Suryanarayana.
278 Yerramalli Venkateswarlu.

II. The undermentioned candidates are declared to have passed the Intermediate Examination in Law, held in July 1936 :—

FIRST DIVISION.

(In order of merit.)

Non-collegiate student (Registered No. 5351 of 1933-34).

1 Mukhopadhyay, Dhirendranath.

University Law College.

2 Syed Mahbubar Rahman.
3 Bagla, Satyanarayan.
4 Mukhopadhyay, Dhirendrakumar.
5 De, Binaybhushan.
6 Das, Debendranath.
Maitra, Sachindrakumar.
8 Sen, Dibyendumohan.

Non-collegiate student (University Law College).

9 T. Narayana Marar.

University Law College.

10 Bil, Harimohan.
11 Acharyya, Ranendrakumar.
Basu, Prabhatkumar.
Mallik, Phanibhushan.

Ripon Law College.

14 Majumdar, Dhirendramohan.

Non-collegiate student (University Law College).

15 Chattopadhyay, Bankimchandra.

University Law College.

Chattopadhyay, Satyanarayan.

Non-collegiate student (University Law College).

Hajra, Surendrachandra.

University Law College.

18 Ghosh, Bimalkrishna.
" Surendranath.

Non-collegiate student (University Law College).

20 Chaudhuri, Rai Sudhindranath.

Ripon Law College.

Eskander Ali Khan.

SECOND DIVISION.

(In alphabetical order.)

University Law College.

Abdul Aziz Chowdhury.

Ripon Law College.

Abu Md. Abdullah.

University Law College.

Abu Tayeb.
Abul Basher Saifuddin Hyder.

Non-collegiate student (Registered No. 542 of 1923-24).

Acharyya, Sasadhar.

Ripon Law College.

Ataur Rahman Chowdhuri.
Azim Uddin Ahmed.

Non-collegiate student (Registered No. 1288 of 1926-27).

Bagchi, Banindranath.

University Law College.

Baksi, Arddhendu.
10 Balwant Singh Basarke.
Bandyopadhyay, Bibhutibhushan.
" Bimalchandra.
" Binaybhushan.
" Haridas.
" Kamalkanti.
" Nimaicharan.

Non-collegiate student (Ripon Law College).

Bandyopadhyay, Prakaschandra.

University Law College.

Bandyopadhyay, Purnachandra.
" Santoshkumar.

Earle Law College, Gauhati.

20 Bandyopadhyay, Satyacharan.

Ripon Law College.

Bandyopadhyay, Thakurdas.

University Law College.

Bandyopadhyay, Umapada.

Non-collegiate student (Registered No. 4623 of 1927-28).

Barua, Mahendralal.

Ripon Law College.

Basak, Praphullakumar.

Non-collegiate student (University Law College).

Basu, Bimalbhushan.

University Law College.

Basu, Dhirendranath.
" Gunendrakumar.

Ripon Law College.

Basu, Jitendramohan.

University Law College.

Basu, Kiranbihari.

Ripon Law College.

30 Basu, Lalitkumar.

University Law College.

Basu, Sachindrakumar.
,, Sailendranath.
,, Sephalendu.

Non-collegiate student (Registered No. 7727 of 1934-35).

Basu, Subodhkisor.

University Law College.

Basu, Sudhirendranath.

Non-collegiate student (Registered No. 118 of 1924-25).

Basu, Sudhirranjan.

University Law College.

Basu, Susthirkumar.
,, Tarakrishna.
Bhaduri, Dwijendralal.
Bhanja, Hirendranath.
Bhattacharyya, Birendranarayan.
,, Brindabanchandra.
,, Gurudas.

Ripon Law College.

Bhattacharyya, Narayanchandra.
,, Prabodhchandra.

Non-collegiate student (Ripon Law College).

Bhattacharyya, Prasadkumar.

Ripon Law College.

Bhattacharyya, Sadananda.
,, Sudhirchandra.

Non-collegiate student (University Law College).

Biswas, Gaurchandra.

University Law College.

Biswas, Subodhranjan.
Chakrabarti, Amulyachandra.

Ripon Law College.

Chakrabarti, Atulchandra.
,, Bhabeschandra.
,, Jagadishchandra.

University Law College.

Chakrabarti, Jyotirmoy.

Non-collegiate student (Registered No. 3286 of 1927-28).

Chakrabarti, Pannalal.

University Law College.

Chakrabarti, Rameschandra.
,, Sailendranath.
Chand Ratan Mohata.
Chattopadhyay, Harakumar.
,, Jagadis.

Ripon Law College.

Chattopadhyay, Kuladananda.

University Law College.

Chattopadhyay, Nirmalkumar.

Non-collegiate student (Registered 1984 of 1927-28).

Chattopadhyay, Rameschandra.

University Law College.

Chattopadhyay, Sibapada.
,, Sibaranjan.
,, Taraknath.
Chaudhuri, Birendranath.
,, Hemendranath.

Ripon Law College.

Chaudhuri, Jyotsnakumar.
,, Manoranjan.

University Law College.

Chaudhuri, Rai Hitendranath.
,, Sudhirchandra.

Ripon Law College.

Das, Abanikanta.

University Law College.

Das, Bhupatinath
,, Bimalchandra.
,, Biswanath.

Earle Law College, Gauhati.

Das, Gopalchandra.
,, Kabindraram.
,, Mathuranath.

University Law College.

Das, Niharranjan.

Ripon Law College.

Das, Sachinandan.

University Law College.

Das, Sudhakar.

Ripon Law College.

Dasbiswas, Jagadindramohan.

University Law College.

Dasgupta, Binaybhushan.
,, Binodlal.

Ripon Law College.

Dasgupta, Jagadischandra.

University Law College.

Dasgupta, Nripendranath.

Non-collegiate student (Registered No. 5751 of 1926-27).

Dastidar, Jibendranath.

Non-collegiate student (Registered No. 5775 of 1925-26).

Dastidar, Purnendubikas.

University Law College.

Datta, Apurbaratan.
,, Bharatibhushan.
,, Haripada.

Ripon Law College.

Datta Manindranath.

University Law College.

Datta, Milanchand.
,, Rabindrakumar.
,, Rabindranath.
,, Rameschandra, I.

Ripon Law College.

Datta, Sitalchandra.

Non-collegiate student (Registered No. 443 of 1929-30).

Dattaray, Apurbakanchan.

Ripon Law College.

De, Dwijendrakisor.

Non-collegiate student (University Law College).

De, Makhanlal.

Ripon Law College.

De, Manindralal.

University Law College.

Deb, Mukundakrishna.
Debbhuti, Subhankar.

Earle Law College, Gauhati.

Debsarma, Achyutananda.

University Law College.

Dhar, Dwijendranath.
Fatehchand Kothary

Ripon Law College.

Fazlal Karim Choudhary.

University Law College.

Gan, Praphullakumar.
Gangopadhyay, Amiyakanta.
,, Nanigopal.
,, Nirupamchandra.

Ripon Law College.

Gangopadhyay, Phanibhushan.

Earle Law College, Gauhati.

Gangopadhyay, Sudhindrachandra.

Non-collegiate student (Registered No. 495 of 1927-28).

Ghatak, Dineschandra.

Non-collegiate student (University Law College).

Ghatak, Pratulchandra.

University Law College.

Ghosh, Ajitkumar (Registered No. 1659 of 1930-31).
,, Ajitkumar (Registered No. 4023 of 1929-30).
,, Pabitrakumar
,, Ramanath.
,, Santoshkumar.

Non-collegiate student (Registered No. 2902 of 1925-26).

Ghosh, Satischandra.

University Law College.

Ghosh, Sitansuranjan.
,, Sudhirchandra.

Non-collegiate student (Registered No. 5112 of 1923-24).

Ghosh, Sudhirchandra.

Ripon Law College.

Ghosh, Sudhirkumar.

Earle Law College, Gauhati.

Gohain, Amritalal.
Goswami, Indranath.

University Law College.

Goswami, Rabindrakumar.
Gouri Shankar Daruka.

Non-collegiate student (Ripon Law College).

Guha, Ajitkumar.

University Law College.

Guha, Anilmohan.

Non-collegiate student (Registered No. 1190 of 1924-25)

Guha, Jyotirmay.

Ripon Law College.

Gupta, Sharanan.
Habibur Rohman.

University Law College.

Hiralal Vaisya.

Earle Law College, Gauhati.

Ismail Ali.

Non-collegiate student (University Law College).

Jehangir Kabeer.

University Law College.

Kar, Nikhilchandra.

Ripon Law College.

Kazi Mahammad Idris.

University Law College.

Kesh, Kedarnath.
Keshava Prasad Pathak.

Earle Law College, Gauhati.

Khabiruddin Ahmed.

Ripon Law College.

Khan Badruddoja.

Non-collegiate student (University Law College).

Kirti, Abanikumar.

Ripon Law College.

Laha, Nikunjabihari.

University Law College.

Lahiri, Bhabeschandra.
,, Binaybhushan.

Non-collegiate student (Registered No. 7182 of 1931-32).

Lahiri, Sailendrakanta.

University Law College.

Lala Madanmohan Varma.
M. Fazlul Huq.

Non-collegiate student (University Law College).

Mahalanabis, Surendramohan.

Non-collegiate student (Ripon Law College).

Mahammad Emdad Ali.

Non-collegiate student (University Law College).

Mahapatra, Biswanath.

University Law College.

Maitra, Adityadas.
,, Mangalmay.
,, Nirmalkumar.
Majumdar, Bimalendu.

Non-collegiate student (Registered No. 880 of 1926-27).

Majumdar, Byomkes.

University Law College.

Majumdar, Jyotirindranath.

Ripon Law College.

Majumdar, Nikunjabihari.
,, Niradbaran.

University Law College.

Majumdar, Saratchandra.
Mallik, Bijankumar.
,, Nandakisor.

Non-collegiate student (University Law College).

Mallik, Nripendrachandra.

University Law College.

Mallik, Upendranath.
Mandal, Phanibhushan.

Ripon Law College.

Md. Abdul Jalil.
Md. Abdul Jalil Miah.
Md. Gowharuzzaman Chaudhurie.
Md. Ismail.

University Law College.

Md. Nural Haque Chowdhury.

Ripon Law College.

Md. Nurullah Khanikar.

University Law College.

Menon, E. P. G.
Misra, Chittaranjan.
Mitra, Birendranath.
,, Lalitmohan.
,, Mukundalal.
,, Ranjitkumar.
,, Sakshigopal.
,, Satyendranath.
,, Subhransubhushan.
Mitraniyogi, Kshitibhushan.

Ripon Law College.

Muhammad Delawar Hossain.

Non-collegiate student (University Law College).

Mukhopadhyay, Arunranjan.

University Law College.

Mukhopadhyay, Chandranarayan.
,, Jitendranath.
,, Kamalal.
,, Lalitmohan.
,, Manojmohan.

Non-collegiate student (University Law College).

Mukhopadhyay, Rabindranath.

Ripon Law College.

Mukhopadhyay, Ramendranath.
,, Sadananda.

University Law College.

Mukhopadhyay, Satyagopal.
,, Sureschandra.
Nandi, Digindranath.
Nasir Uddin Chowdhury.

Earle Law College, Gauhati.

Nath, Saradindu.

Non-collegiate student (University Law College).

Niyogi, Sudhirkumar.

University Law College.

O. Nila Kandhan Nanboodwipad.

Earle Law College, Gauhati.

Ojha, Dambarudhar.

University Law College.

Pal, Nibaranchandra.
Palit, Phanindramohan.
Panja, Bhairabchandra.

Earle Law College, Gauhati.

Phukan, Surendranath.

Ripon Law College.

Pramanik, Nagendranath.

University Law College.

Prayag Narayan Rawani.

Non-collegiate student (University Law College).

Rai Jagadish Saran Prosad.

University Law College.

Ray, Ajitgopal.

Non-collegiate student (Registered No. 2344 of 1929-30).

Ray, Ambikacharan.

University Law College.

Ray, Batakrishna.
,, Bibhutibhushan.

Ripon Law College.

Ray, Bijaysankar.

University Law College.

Ray, Binodbhushan.
,, Ganeschandra.

Ripon Law College.

Ray, Kisorimohan.

University Law College.

Ray, Kshitindramohan.
,, Praphullakumar.

Non-collegiate student (Ripon Law College).

Ray, Satadal.

University Law College.

Ray, Satyendrakumar.

Ripon Law College.

Raychaudhuri, Jadabchandra.

University Law College.

Raychaudhuri, Makhanlal.

Ripon Law College.

Raychaudhuri, Nirmalchandra.

University Law College.

Raychaudhuri, Nisithranjan.

Ripon Law College.

Raychaudhuri, Sanatkumar.
Raykarmakar, Durgapada.

University Law College.

Rudra, Rabindranath.
Saha, Dhirendranath.

Non-collegiate student (Registered No. 3233 of 1928-29).

Sain, Siddheswar.

Non-collegiate student (Registered No. 5662 of 1923-24).

Samaddar, Surendranath.

University Law College.

Samanta, Purushottam.

Sarkar, Ahibhushan.
,, Amulyakrishna.

Earle Law College, Gauhati.

Sarkar, Anilkumar.

Non-collegiate student (Ripon Law College).

Sarkar, Debendranath.

Ripon Law College.

Sarkar, Kedarnath.

University Law College.

Sarkar, Sanatkumar.

Earle Law College, Gauhati.

240 Sarma, Saratchandra.

University Law College.

Sen, Amulyabhushan.
,, Bimalendusekhar.
,, Chandiprasad.
,, Panchkari.

Non-collegiate student (University Law College).

Sen, Ramendralal.

Non-collegiate student (Ripon Law College).

Sen, Sucharubhushan.

University Law College.

Sen, Sunilkumar, II.
,, Sunilkumar (Registered No. 704 of 1928-29.)

Ripon Law College.

Sengupta, Jatindranath.

University Law College.

250 Sengupta, Kumarjyoti.

Non-collegiate student (Registered No. 336 of 1929-30).

Sengupta, Nalinikumar.

Ripon Law College.

Serajuddin Ahmed.

Non-collegiate student (University Law College).

Shah, Safiullah.

Ripon Law College.

Shaik Mahamed Esfuckuddin.
Shaikh Ahamed Ali.

University Law College.

Shri Niwash Purohit.
Sinha, Abanindranath.

Ripon Law College.

Sinha, Dakshinaranjan.

Non-collegiate student (Ripon Law College).

Sinha, Jatindralal.

University Law College.

260 Sur, Jitendranath.

Ripon Law College.

Syed Hafizuddin.
Syed Jalaluddin Hossain Sekandar.
Syed Sobhan Ahmad.

Non-collegiate student (University Law College.)

Talukdar, Nirmal.

University Law College.

Talukdar, Sasikanta
266 Taraphdar, Sureschandra.

III. The undermentioned candidates are declared to have passed the Final Examination in Law held in July, 1936.

FIRST DIVISION.

(In order of merit.)

University Law College.

1 Sanyal, Rabindranath.

Non-collegiate student (Registered No. 6331 of 1932-33).
2 Majumdar, Sumatimohan.

University Law College.

3 Chakrabarti, Narendrachandra.
4 ,, Jagadischandra.

Non-collegiate student (Register No. 5399 of 1929-30).

5 Niyogi, Sailendramohan.

Non-collegiate student (Registered No. 1608 of 1929-30).

6 Basu, Sambhunath.

Ripon Law College.

7 Noor Muhammad Khan.
8 Pal, Ambujaksha.

Non-collegiate student (Ripon Law College.).

9 Basu, Kshitischandra.

Non-collegiate student (University Law College).

Chattopadhyay, Manilal.

Ripon Law College.

11 Ghulam Mawla.

Non-collegiate student (University Law College).

12 Gupta, Kanaikumar.

Ripon Law College.

Palit, Dineskumar.
14 Sarkar, Santoshkumar.

University Law College.

15 Ekareh, Seenah E. D.
Ghoshal, Biswanath.
17 Bandyopadhyay, Pramodkumar.
18 Mukhopadhyay, Amritadhan.

Non-collegiate student (Registered No. 8717 of 1933-34.)

19 Ray, Ajitsinha.

Earle Law College, Gauhati.

20 Goswami, Parbatikumar.

Ripon Law College.

Sarkar, Amulyakumar.

Non-collegiate student (Registered No. 1143 of 1928-29).

22 Chandra, Ganganarayan.

University Law College.

Gupta, Kapilkumar.

Non-collegiate student (Registered No. 7279 of 1923-24.)

Majumdar, Indubhushan.

University Law College.

25 Dan, Hariprasad.

Ripon Law College.

Pal, Samarendranath.

University Law College.

27 Bandyopadhyay, Nilkamal.
Guha, Sailendrakumar.
29 Gangopadhyay, Jnanananda.

Non-collegiate student (University Law College).

30 Humayun Z. A. Kabir.

Ripon Law College.

31 Bandyopadhyay, Girijabhushan.

University Law College.

De, Mrityunjay.
Mukhopadhyay, Ajitkumar.
Sen, Aswinikumar.
35 Dhara, Balaram.
Mukhopadhyay, Amarendranath.

SECOND DIVISION.

(In order of merit.)

University Law College.

1 Chakrabarti, Mohinimohan.
Datta, Dauleswar.
Dattapramanik, Binaykumar

Non-collegiate student (University Law College).

Maitra, Ajitnath.

University Law College.

Mukhopadhyay, Dibyendubhushan.

Ripon Law College.

Nandi, Susilkumar.

Non-collegiate student (University Law College).

7 Debchaudhuri, Jitendranarayan.

Ripon Law College.

Mukhopadhyay, Rabindranath.

University Law College.

Syamchaudhuri, Nandalal.
10 Majumdar, Kalikrishna.

Non-collegiate student (Registered No. 654 of 1928-29.)

Pal, Nripendramohan.

Ripon Law College.

12 Chakrabarti, Hemendrachandra.
Purkait, Saurindramohan.

University Law College.

Ray, Amulyakrishna.

Non-collegiate student (Registered No. 406 of 1927-28).

Sarkar, Mahadeb.

University Law College.

16 Bandyopadhyay, Mrinalini.
Datta, Narendranath.

Non-collegiate student (Registered No. 426 of 1928-29).

16 Majumdar, Jyotirindranath.

Non-collegiate student (Earle Law College, Gauhati).

Md. Yusuf Ali.

Ripon Law College.

Sinha, Sureschandra.

University Law College.

21 Dasgupta, Sudhenduprasad.

Non-collegiate student (Registered No. 5197 of 1927-28).

Gangopadhyay, Kshitilal.

Ripon Law College.

Mitra, Chandicharan.
Syed Ahsan Ali.

University Law College.

25 Maiti, Lakshmikanta.

Ripon Law College.

Md. Abdul Hamid.

Non-collegiate student (Registered No. 8906 of 1933-34).

Sen, Sisirkumar.

University Law College.

28 Bandyopadhyay, Amritalal.

Non-collegiate student (Registered No. 3519 of 1929-30).

Bhattacharyya, Anantakumar.

University Law College.

Palit, Nripendramohan.

Non-collegiate student (Registered No. 1618 of 1928-29).

Sengupta, Nripendranath.

University Law College.

32 Maiti, Sarojkumar.

Ripon Law College.

Md. Osman Gani Pramanik.

University Law College.

Mukhopadhyay, Syamadas.

Non collegiate student (University Law College).

Syed Mohamed Askari

University Law College.

36 Basu, Nalendu.

Ripon Law College.

Hybat Ali Khan.

University Law College.

Mukhopadhyay, Amalkumar.
Phukan, Mohimnath.

Non-collegiate student (Registered No. 60 of 1933-34).

40 Bhaumik, Niradbaran.

University Law College.

Chakrabarti, Sambhunath.
Ghosh, Ratikanta.
Laik, Chandranarayan.
44 Bandyopadhyay, Narendranath.

Non-collegiate student (University Law College).

Ray, Jitendranarayan.

University Law College.

Majumdar, Kantibhushan.

Ripon Law College.

47 Adhikari, Arunchandra.

Non-collegiate student (University Law College).

Bhattacharyya, Rabindranath.

Ripon Law College.

Mitra, Sudhansukumar.

University Law College.

50 K. Balakrishna Menon.

Ripon Law College.

51 Gupta, Kamalakanta.

University Law College.

Mohan Lal Sahgal.

Ripon Law College.

Sen, Nisitchandra.

University Law College.

54 Abdur Rabb.
Mitra, Sudhansukumar.
Oinam Thambal Singh.
57 Datta, Saibal Chandra.

Ripon Law College.

Mofozol Hussain.

University Law College.

Mukhopadhyay, Chandranath.

Ripon Law College.

Ray, Bholanath.

University Law College.

Saha, Kshitindramohan.

Ripon Law College.

Sen, Sailendranath.

University Law College.

63 Chakrabarti, Satyendranath.
Majumdar, Hirendramohan.

Ripon Law College.

Mofidur Rohman Hazarika.

University Law College.

Mukhopadhyay, Susilkumar.
Sen, Mahatapchandra.

Ripon Law College.

69 Syed Mahmudul Haque.
Abul Mukarram Fazlul Wahhab.
Lahiri, Ushapati.

University Law College.

71 Mitra, Sakshigopal.
Omkarnath Khandelwal.

Ripon Law College.

73 Chaudhuri, Birendrakumar.
,, Mohinimohan.
75 Abu Syed Md. Mubarok.

University Law College.

Kar, Sudhirkumar.
77 Bandyopadhyay, Sibaprasad.
Bhattacharyya, Chintamani.
Ghosh, Ramendranath.
80 Bandyopadhyay, Narayandas.

Non-collegiate student (University Law College).

Barua, Birinchikumar.

Ripon Law College.

Eusuf Ali Mridha.

Earle Law College, Gauhati.

Hajarika, Atulchandra.

Ripon Law College.

Muhammad Ershad Ali.
Muhammad Yasin.

Non-collegiate student (University Law College).

Mukhopadhyay, Ganganarayan.

University Law College.

Sengupta, Asitranjan.

Ripon Law College.

Chakrabarti, Sudhircharan.

Earle Law College, Gauhati.

88 Chaudhuri, Golapchandra.

University Law College.

Ghosh, Jitendrakrishna.
,, Rasbihari.

Ripon Law College.

Mukhopadhyay, Anilkumar.

University Law College.

Sen, Sudhamchandra.

Non-collegiate student (Registered No. 6147 of 1925-26).

94 Chakrabarti, Niradbihari.

University Law College.

Chaudhuri, Parananda.

Earle Law College, Gauhati.

Saharia, Sandhiram.

Ripon Law College.

97 Chaudhuri, Kshirodbihari.

Earle Law College, Gauhati.

Goswami, Trailokyanath.

University Law College.

Mitra, Anilkrishna.
Raychaudhuri, Smritikumar.
Sarkar, Sudhindrakumar.
102 Chakrabarti, Atulkumar.

Non-collegiate student (Registered No. 5417 of 1922-23)

Chakrabarti, Saileswar

University Law College.

Mukhopadhyay, Ramapati.
Nandi, Syamsundar.

Ripon Law College.

N. K. N. Aiyengar.
S. Md. Aminul Islam Chowdhury.

University Law College.

108 Basu, Anilchandra.
Biswas, Harendranath.
Chattopadhyay, Asokkumar.
Mandal, Surendranath.

Ripon Law College.

Waizuddin.

Non-collegiate student (University Law College).

113 Das, Jagatbandhu.

Non-collegiate student (Ripon Law College).

Mahbubul Alam.

University Law College.

Pal, Panchanan.

Non-collegiate student (Univeristy Law College).

Sarkar, Giridhar.

Ripon Law College.

Syed Bazlar Rahman.
Tahasin Uddin Ahmed.
119 Ghosh, Biswanath.

University Law College.

Mukhopadhyay, Durgaprasanna.
Ram Pujan Rai.

Earle Law College, Gauhati.

Sarma, Praneswar.

University Law College.

123 Ghoshal, Barindrakumar.
Ray, Bijanbandhu.
Sarkar, Janardan.
Talukdar, Nikhilchandra.
127 Bandyopadhyay, Subhaslal.
Basak, Gopiballabh.
Desarkar, Anilkumar.
Mukhopadhyay, Ranjitkumar.

Ripon Law College.

131 Chattopadhyay, Sibcharan.

University Law College.

Ghosh, Brajendramohan.
Mukhopadhyay, Abinaschandra.
Ray, Rabindranath.
135 Bandyopadhyay, Baidyanath.
Basu, Anilkumar.
Chakrabarti, Ajitkumar.

Ripon Law College.

138 Dattagupta, Saurendrakumar.
Md. Habibur Rahmon.

Non-collegiate student (University Law College).

Nanday, Mahima Prakash.

Ripon Law College.

Sengupta, Sisirchandra.

University Law College.

Wedad Abul Moarif.

Earle Law College, Gauhati.

143 Barua, Dayalchandra.

University Law College.

Mitra, Srigopal.

Ripon Law College.

Nural Islam Khan.

University Law College.

Sarkar, Sibaprasanna.
147 Bhattacharyya, Mahimaranjan.
De, Pareschandra.

Ripon Law College.

Sufi Hossain Ali.
Syed Harunar Rashid.
151 A. Z. M. Abdur Razzaque.

Earle Law College, Gauhati.

Barua, Harendranath.

Ripon Law College.

Chakrabarti, Praphullakumar, II

Non-collegiate student (University Law College).

Chattopadhyay, Saratchandra.

Earle Law College, Gauhati.

Das, Bhagabanchandra.

Ripon Law College.

Kataki, Nandiprasad.

University Law College.

Maitra, Birendrakumar.

Ripon Law College.

Md. Ismail Hossain.
Muhammad Turab Ali.
Sengupta, Ramchandra.

University Law College.

161 Chaudhuri, Batakrishna.

Earle Law College, Gauhati.

Debasarma, Jadabchandra.

University Law College.

Ghosh, Subratakumar.
Mukhopadhyay, Mohanlal.
Niyogi, Sarudindukumar.

Non-collegiate student (Ripon Law College).

166 Chandra, Sureschandra.

University Law College.

Das, Mahimaranjan.
Pain, Bhabeschandra.
Ramkumar Ladha.
Sen, Rabindranath.
171 Barua, Dulalchandra.
Basu, Amarendrakumar.
De, Sailendrakumar.
Mal, Gobindachandra.
Saha, Mahendranath.
Sinharay, Sachindrakumar.
177 Das, Sudhirchandra.
Hajra, Sachindrasankar.

Ripon Law College.

179 A. K. M. Munsef Ali.

Non-collegiate student (Registered No. 868 of 1925-26).

Dhar, Manoranjan.

Ripon Law College.

Iqbal Jahan.

University Law College.

Sarkar, Muralidhar.

Earle Law College, Gauhati.

183 Das, Gajiram.

University Law College.

Nanday, Triptiprakas.
V. K. Sankara Menon.
186 Baksi, Ajitkumar.

Ripon Law College.

Basu, Susilkumar.

University Law College.

Datta, Ahibhushan.
Dhar, Nirmalkumar.

Ripon Law College.

Ghosh, Pannalal.

University Law College.

Ray, Subodhkumar.

Ripon Law College.

Sengupta, Pramatharanjan.

University Law College.

193 Bhattacharyya, Nityaranjan.
Biswas, Mahadeb.

Ripon Law College.

Chattopadhyay, Amarendranath.

University Law College.

De, Chandicharan.
Ghosh, Hemchandra.

Non-collegiate student (University Law College).

198 Bandyopadhyay, Dhirendranath.
Bhaumik, Manindramohan.

University Law College.

Chakrabarti, Sachindranath.

Ripon Law College.

Ghosh, Narendranath.
Mitra, Baidyanath.

University Law College.

Mukhopadhyay, Rathindranath.

Earle Law College, Gauhati.

204 Bhattacharyya, Pramodram.

Non-collegiate student (University Law College).

Mitra, Rabindranath.

University Law College.

Mukhopadhyay, Santoshkumar.
Sen, Rebatimohan.

Non-collegiate student (University Law College).

208 Bandyopadhyay, Narendrachandra.

University Law College.

Basu, Sukumar.
Basumallik, Gopendrakrishna.

Ripon Law College.

Chakrabarti, Hemchandra.

Earle Law College, Gauhati.

Gogai, Munindranath.

Non-collegiate student (Registered No. 5595 of 1924-25).

Guha, Bibhutibhushan.

Non-collegiate student (Ripon Law College).

Nag, Sisirkumar.

University Law College.

Nandi, Anilkumar.

Earle Law College, Gauhati.

Nowa Rymbai.

University Law College.

Sinha, Basantakumar.

Ripon Law College.

218 A. N. Md. Wahiduzzaman.

Non-collegiate student (University Law College).

Basu, Asoklal.

University Law College.

Ghosh, Bhupendranath.
Ghosh, Madhabchandra.
Mukhopadhyay, Bimalapati.
223 Datta, Anathnath.

Earle Law College, Gauhati.

Rajmedhi, Surendranath.

University Law College.

Ray, Nimaicharan.

Earle Law College, Gauhati.

Sarma, Tarunchandra.

University Law College.

S. K. Ahammad Ali Beg.

Ripon Law College.

228 Abdul Halim.
Basu, Bibhutibhushan.

University Law College.

Chattopadhyay, Ambujaksha.

Ripon Law College.

Chattopadhyay, Brajendrakumar.

University Law College.

Mandal, Harendranath.
Mitra, Manindrachandra.
Nandi, Bijaykrishna.
Sarkar, Gangadhar.
236 Bhaumik, Sachindramohan.

Earle Law College, Gauhati.

Chakrabarti, Syamaprasad.
Das, Pitmal.

Non-collegiate student (Ripon Law College).

Das, Umeschandra.

University Law College.

De, Nandadulal.
241 Adhya, Gopinath.
Bandyopadhyay, Rabindrakumar.

Ripon Law College.

Chandra, Arunchandra.
Kazi Hafizullah.

Non-collegiate student (University Law College).

Kazi Mohd. Masood Ashraff.

University Law College.

Pal, Jitendrakisor.
247 Chaki, Nalinbihari.
Mallik, Prabhansukumar.
Ray, Santoshkumar.
250 Bandyopadhyay, Susilkumar.
Basu, Sobhendranadhab.
Bhattacharyya, Ramnarayan.
Datta, Bimalkumar.

Ripon Law College.

Dhar, Kshitischandra.

University Law College.

Gupta, Sailendranath.
K. Bhaskara Rao.

Ripon Law College.

Mahomed Maizuddin.
Mukhlesur Rahman.

University Law College.

Shamsuddin Hafeez.
Som, Prabodhlal.
261 Basu, Prabodhkumar.

Non-collegiate student (University Law College).

Chattopadhyay, Binaybhushan.

Ripon Law College.

Md. Khalil Uddin Miah.

University Law College.

Mukhopadhyay, Panchugopal.
265 Bandyopadhyay, Banamali.

Ripon Law College.

Dasgupta, Sudhireswar.
Gajendramahapatra, Phanindranath.

Non-collegiate student (University Law College).

Ghosh, Asutosh.

University Law College.

Goswami, Jaminikumar.

Ripon Law College.

Syed A. N. M. Nasiruddin.

University Law College.

271 Bhattacharyya, Sibnarayan.

Non-collegiate student (University Law College).

Manna, Jogendranath.

Ripon Law College.

Moqubul Ahamed.
Mukhopadhyay, Khagendranath.

University Law College.

Ray, Tarapada.

Non-collegiate student (Ripon Law College).

Raychaudhuri, Nirmalchandra.

Non-collegiate student (Ripon Law College.)

Umed Ali Ghazi.

Earle Law College, Gauhati.

278 Barua, Manikchandra.

Non-collegiate student (Ripon Law College).

Khorshed Ali Ahmed.

University Law College.

Laha, Parbaticharan.
Mukhopadhyay, Sibapada.
Pramanik, Asutosh.
Raychaudhuri, Gurugati.

Ripon Law College.

Sarkar, Satyendranath.

University Law College.

Sen, Santoshlal.
286 Baksi, Sarojkumar.
Chattopadhyay, Kesabdas.
Gupta, Jnanendrabhushan.

Ripon Law College.

Majed Ali Khan.
Maulik, Sailendranath.
Sengupta, Sudhirranjan.
292 Chattopadhyay, Krishnakumar.
Datta, Birendranath.
Imam Uddin Ahmed.

University Law College.

K. V. Ramakrishna Reddi.
Majumdar, Rasbihari.
Mukhopadhyay, Nakari.

Ripon Law College.

Raychaudhuri, Sukhendubikas.

University Law College.

299 Chakrabarti, Nalinbihari.
De, Taraknath.
Sen, Chittaranjan.
302 Bhattacharyya, Pannalal.
Chattopadhyay, Anilkumar.
" Sasankasekhar.

Earle Law College, Gauhati.

Goswami, Rebatinath.

Ripon Law College.

306 Bandyopadhyay, Taraprasad.

University Law College.

Bhattacharyya, Nagendramohan.
Das, Balaichandra.

Ripon Law College.

Das, Satyaranjan.

University Law College.

Ghatak, Haranath.
Ghosh, Gaurmohan, I.

Ripon Law College.

Ghosh, Prabhatkumar.

University Law College.

Mukhopadhyay, Ardhenduseklar.

Ripon Law College.

Nayak, Prabhakar.

University Law College.

Ray, Kalisankar.

Ripon Law College.

Shah Nazibul Huq.
Sheikh Abul Hossain.

B. B. DUTT,
Controller of Examinations.

Orders by the Vice-Chancellor and Syndicate of the Calcutta University.

Senate House, the 29th August 1936.

NOTICE.

It is hereby announced for general information that—

(1) the centre at Bhatpara, in the district of 24-Parganas (Bengal), has been renewed for one year for holding the Matriculation Examination, 1937, on the usual conditions;

(2) the centre at Ghatal, in the district of Midnapore (Bengal), has been renewed for one year for holding the Matriculation Examination, 1937, on the usual conditions;

(3) the centre at Kalna, in the district of Burdwan (Bengal), has been renewed for one year for holding the Matriculation Examination, 1937, on the usual conditions;

(4) the centre at Karimganj, in the district of Sylhet (Assam), has been renewed for one year for holding the Matriculation Examination, 1937, on the usual conditions.

B. B. DUTT,
Controller of Examinations.

Orders by the Vice-Chancellor and Syndicate of the Calcutta University.

Senate House, the 28th August 1936.

NOTICE.

The undermentioned candidate is admitted to the Degree of Doctor of Philosophy. The subject of his thesis submitted to and approved by the Board of Examiners is also noted below:—

Dineschandra Sarkar.

Subject of thesis—

"Dynasties of the Lower Deccan."

B. B. DUTT,
Controller of Examinations.

Calcutta University.

Senate House, the 28th August 1936.

NOTICE.

The undermentioned examinations will commence on the dates noted below. The last dates for submission of applications and fees for admission to these examinations are noted against them:—

Examination.	Commencing date.	Last date for submission of applications and fees.
	1937.	1936.
Law Examinations	Wednesday, 6th January.	Friday, 4th December.
		1937.
L. T and B. T. Examinations.	Thursday, 15th April.	Thursday, 4th March.

B. B. DUTT,
Controller of Examinations.

Jack Memorial Scholarship.

Barisal, the 28th August 1936.

NOTICE.

Applications are invited for three scholarships of Rs. 20 each per mensem payable from the Jack Memorial Trust Fund for the study of Economics either in the Calcutta University Post-Graduate class or in the M.A. class, Dacca University. The scholarships are tenable for one year only with effect from the 1st July 1936 and will be awarded to suitable graduates of any denomination born or ordinarily residing in the districts of Bakarganj and Faridpur. Applicants are required to give their fathers' names and home addresses and to file certificates of character from the Principals of the Colleges from which they graduated, certified statements of the subjects in which they graduated and an undertaking to proceed to a Post-Graduate degree of the Calcutta University or the M.A. degree of the Dacca University with Economics as a subject.

Applications will be received by the undersigned up to 30th September 1936.

H. TUFNELL-BARRETT, *District Magistrate.*

Board of Intermediate and Secondary Education, Dacca.

Ramna, the 19th August 1936.

NOTIFICATION.

Special Scholarships, 1936.

No. 5777.—The following students are awarded the above scholarships on the results of the High Madrasa Examination, 1936, conducted by the Board of Intermediate and Secondary Education, Dacca. The scholarships take effect from the 1st June 1936, and are tenable for two years only at the Islamic Intermediate Colleges under the Board.

(Principals of Islamic Intermediate Colleges are requested to report to the Secretary, Board of Intermediate and Secondary Education, Dacca, the names of the scholarship-holders admitted to their institutions. No scholarship can be drawn until this information is available):—

Six scholarships of Rs. 12 a month each.

1. Abul Khair Muhammad Muhabbat Ali—Dacca Islamic Intermediate College.
2. Abu Yahya Muhammad Abdur Rouf—Dacca Islamic Intermediate College.
3. Muhammad Abdul Majid Mian, I—Dacca Islamic Intermediate College.
4. Muhammad Abdul Hai—Rajshahi Madrasa.
5. Shaikh Mazhar Sarkar—Jangipur Madrasa.
6. Shaikh Muhammad Abdur Rahim—Ahmadia Madrasa.

J. N. ROY, *Secretary (offg.)*.

Board of Intermediate and Secondary Education, Dacca.

Ramna, the 19th August 1936.

NOTIFICATION.

Special Stipends, 1936.

No. 5787.—The following students are awarded the above stipends on the results of the High Madrasa Examination, 1936, conducted by the Board of Intermediate and Secondary Education, Dacca. The stipends take effect from the 1st June 1936 and are tenable for two years at the Islamic Intermediate Colleges under the Board.

(Principals of Islamic Intermediate Colleges are requested to report to the Secretary, Board of Intermediate and Secondary Education, Dacca, the names of the stipend-holders admitted to their institutions. No stipend can be drawn until this information is available):—

Nine stipends of Rs. 8 a month each.

1. Muhammad Abdul Hakim—Nuria Madrasa, Chandpur.
2. Muhammad Ramzan — Pakundia Madrasa.
3. Shaikh Muhammad Habibullah—Jangipur Madrasa.
4. Muhammad Azizul Islam Dewan—Hooghly Madrasa.
5. Muhammad Murshed Ali—Rajshahi Madrasa.
6. Muhammad Mubarak Ali — Nuria Madrasa, Chandpur.
7. Muhammad Abdul Jabbar—Lakshmipur Madrasa.
8. Muhammad Sanaullah — Hooghly Madrasa.
9. Khundkar Muhammad Abdul Munim—Ahmadia Madrasa.

J. N. ROY, *Secretary (offg.)*.

Board of Intermediate and Secondary Education, Dacca.

Ramna, the 21st August 1936.

NOTIFICATION.

Senior Scholarships, 1936.

No. 5859.—The following students are awarded senior scholarships on the results of the Intermediate Examinations, 1936, conducted by the Board of Intermediate and Secondary Education, Dacca. The scholarships take effect from the 1st July 1936 and are tenable for two years.

(Principals of Colleges and Registrar, University of Dacca, are requested to report to the Secretary, Board of Intermediate and Secondary Education, Dacca, the names of the scholarship-holders as soon as they are admitted. No scholarship can be drawn until this information is available):—

Two scholarships of Rs. 25 a month each.

1. Dalimkumar Guha—Dacca Intermediate College.
2. Lily Som—Eden Intermediate College.

Three scholarships of Rs. 20 a month each.

1. Syed Qamarul Ahsan—Dacca Intermediate College.
2. Binayranjan Gupta—Jagannath Intermediate College.
3. Anilbandhu Majumdar—Jagannath Intermediate College.

Special scholarships for girls.

Two scholarships of Rs. 20 a month each.

1. Bharatlakshmi Mukhopadhyay—Eden Intermediate College.
2. Mallika Sen — Kamrunnessa Intermediate College.

J. N. ROY, *Secretary (offg.)*.

Board of Intermediate and Secondary Education, Dacca.

Ramna, the 21st August 1936.

NOTIFICATION.

Special Senior Scholarships for Muhammadans, 1936.

No. 5867.—The following students are awarded special senior scholarships for Muhammadans on the results of the Intermediate Examinations, 1936, conducted by the Board of Intermediate and Secondary Education, Dacca. The scholarships take effect from the 1st July 1936 and are tenable for two years.

(Principals of Colleges and Registrar, University of Dacca, are requested to report to the Secretary, Board of Intermediate and Secondary Education, Dacca, the names of the holders of the scholarships admitted to their institutions. No scholarship can be drawn until this information is available):—

Two scholarships of Rs. 10 a month each.

1. Nurjehan Begum—Eden Intermediate College.
2. A. B Muhammad Serajul Huq Khan—Jagannath Intermediate College.

J. N. ROY, *Secretary (offg.)*.

Board of Intermediate and Secondary Education, Dacca.

Ramna, the 22nd August 1936.

NOTIFICATION.

Junior Jack Muhammadan Settlement Scholarship, 1936.

No. 5887.—Subject to the usual conditions of good conduct and satisfactory progress, the Junior Jack Muhammadan Settlement Scholarship attached to the Dacca Intermediate College, of the value of Rs. 90 per annum, is awarded to the following student on the results of the High School Examination, 1936, conducted by the Board of Intermediate and Secondary Education, Dacca:—

Abul Fazl Muhammad Mahbubur Rahman—First Year Class.

2. The scholarship is tenable at the Dacca Intermediate College for two years, with effect from the 1st June 1936.

3. The scholar must reside in a hostel attached to the Dacca Intermediate College.

J. N. ROY, *Secretary (offg.)*.

Registered No. C207

The Calcutta Gazette

THURSDAY, SEPTEMBER 3, 1936.

PART II

Advertisements.

Notices

Advertisements, Notices, etc., intended for insertion in this part of the Gazette must be sent to Press before 12 noon on Saturday, and all costs deposited and proofs returned by 4 p.m. on Monday. Manuscripts and postal remittances must be addressed to Superintendent, Government Printing (Publication Branch), Bengal Government Press, Alipore.

For the convenience of advertisers located in Calcutta, arrangements have been made to accept advertisements and prepayment of charges at Sales Office, Ground Floor, Writers' Buildings, Calcutta. The latest time for receipt of advertisements for current week's Gazette has been extended till 4 p.m. on Mondays.

Land Sale Notices.

Notification A.

NOTICE is hereby given, under sections 6 and 13, Act XI of 1859, that the undermentioned estates and shares of estates in the district of Howrah will be put up for sale at the office of the Collector of that district on the 25th September 1936, at 12 noon, for arrears of revenue and other demands which by law are realisable as arrears of land revenue.

When in columns 5, 7 and 9 of the following statement it is stated that only a share is to be sold, it is to be understood that a separate account is kept for that share :—

Touzi No.	Name of mahal and pargana.	Sadar jama of the whole estate.	Whether the whole estate is to be sold.	If only a share is to be sold, specification of such share or shares.	Names of proprietor of property to be sold.	If only a share is to be sold, the Sadar jama of such share.	If the whole estate is to be sold, the arrears due from it.	If only a share is to be sold, the arrears due from it.
1	2	3	4	5	6	7	8	9
		Rs. a. p.				Rs. a. p.	Rs. a. p.	Rs. a. p.
1/9	Basantapur, pargana Bhursit, police-station Amta.	11,065 7 0	..	1a. 16gds. share of the estate.	Monohor Lal Seal	1,244 14 4	..	165 5 4
4/7	Mandalghat, pargana Bhursit, police-station Shyampore.	2,23,079 8 0	..	2as. 11 gds. 2 kag 4 til share of the estate.	Ditto ..	35,669 0 0	..	12,208 0 0
4/8	Ditto ..	2,23,078 8 0	..	12 gds. 3c. 16 til share of the estate.	Sm. Nikunja Manjuri Dasi.	8,929 9 6	..	3,574 8 7
4/15	Ditto ..	2,23,078 8 0	..	1a. 10 gds. 2c. 3 kag 10½ til share of the estate.	Gokul Chandra Pyne as receiver to the estate of Panchanon Mullick.	21,402 2 0	..	6,374 6 10
4/16	Ditto ..	2,23,078 8 0	..	1a. 10gds. 2 c. 3kag 10½ til share of the estate.	Jogendra Nath Mullick.	21,402 1 0	..	2,782 12 9
4/17	Ditto ..	2,23,078 8 0	..	1a. 10gds. 2c. 3 kag 10½ til share of the estate.	Girimohon Mullick.	21,402 1 0	..	7,537 4 3
4/18	Ditto ..	2,23,078 8 0	..	1a. 10gds. 2c. 3 kag 10½ til share of the estate.	Gourmohon Mullick.	21,402 1 3	..	8,606 0 2
8/A	Sherpur, pargana Balia, police-station Amta.	10,383 8 0	..	9 annas share of the estate.	Monohor Lal Seal	5,840 11 3	..	2,393 0 11

The estates are being advertised for sale for instalments of revenue which were due on 30th Jaistha, 1343 B.S., of which the latest date of payment was 28th June 1936.

All other shares besides that specified will be excluded from the sale.

Howrah, the 11th August 1936.

S. C. SINHA, Collector.

Notification A.

NOTICE is hereby given under sections 6 and 13, Act XI of 1859, that the undermentioned estates and shares of estates in the district of Tippera will be put up for sale at the office of the Collector of that district on the 21st September 1936 at 12 noon for arrears of revenue and other demands which by law are realizable as arrears of land revenue.

When in columns 5, 7 and 9 of the following statement it is stated that only a share is to be sold, it is to be understood that a separate account is kept for that share :—

Tauzi No.	Name of mahal and pargana	Sadar jama of whole estate.	Whether the whole estate is to be sold.	If only a share is to be sold, specification of such share or shares.	Names of proprietors of property to be sold.	If only a share is to be sold, the sadar jama of such share.	If the whole estate is to be sold, the arrears due from it.	If only a share is to be sold, the arrears due from it.
1	2	3	4	5	6	7	8	9
		Rs. a. p.				Rs. a. p.	Rs. a. p.	Rs. a. p.
22	Bardakhat pargana, 5 gds. 2 c. 1 kt. kismat, pargana Bardakhat.	2,806 9 1	..	Tauzi No. 22/9, hissa 2 as. 19 gds. 3 c. 1 kt. 3/8 dt. All other shares than that specified will be excluded from the sale.	Taleb Ali *alias* Alep Ali and others.	526 4 8	..	112 13 4
26	Priya Nath Basak, pargana Bardakhat.	3,227 3 0	Whole	....	Mr. S. Guha, Bar. at-law, Common Manager on behalf of Khirode Nath Basak and others.	..	807 0 0	..
75	Suresh Chandra Mukhapadhya, pargana Mahabbatpur.	964 14 10	Do. ..	....	Suresh Chandra Mukhapadhya and another.	..	241 0 0	..
94	Bipin Behari Roy Choudhury, pargana Homnabad.	678 2 1	Do. ..	....	Bepin Behari Roy Choudhury.	..	170 0 0	..
97	1 anna share of pargana Homnabad, pargana Homnabad.	6,813 0 8	..	Tauzi No. 97/R, hissa 4 as. 13 gds. 1 c. 1 kt. All other shares than that specified will be excluded from the sale.	Ananda Priya Baishnabi.	1,087 2 2	..	189 5 2
190	Nowra mahal, pargana Syampur.	806 11 9	Whole	....	Subarna Bala Debi and another.	..	336 14 9	..
199	Narayanpur pargana, 7 as. 5 gds. kismat, pargana Narayanpur.	1,193 10 3	..	Tauzi No. 199/R, hissa 14 as. 1 gd. 3 c. 1½ kt. All other shares than that specified will be excluded from the sale.	Kafurennessa Choudhurany and others.	1,051 4 11	..	204 1 4
211	Forkabad Tape, 3 as. 5 gds. kismat, pargana Forkabad Tape.	2,347 11 9	Whole	....	Srimati Hafeza Khatoon Choudhurany.	..	521 2 9	..
212	Jajneswar Bose, pargana Forkabad Tape.	768 5 6	Do. ..	....	Kshetra Mohan Mukherjee.	..	142 0 0	..
281	Jajneswar Bose, pargana Singergaon.	1,155 11 4	Do. ..	....	Ditto ..	..	288 14 0	..
372	Ahmedpur mauza, 10 as. 13 gds. 1 c. 1 kt. kismat, pargana Bardakhat.	818 15 0	Do. ..	....	Ananga Mohan Roy Choudhury, sebayat for the estate of Sree Sree Kumadeswar Mahadeb.	..	224 14 6	..
406	Borochar No. 178 Decree under Act 2 of 1819, pargana Mahabbatpur.	1,584 12 0	..	Tauzi No. 406/R, hissa 5 as. 6 gds. 2 c. 2 kt. All other shares than that specified will be excluded from the sale.	Siddhi Gopal Sukul and others.	528 4 0	..	56 2 11
465	Lajair Joar, hissa 10 as. 13 gds. 1 c. 1 kt., pargana Bardakhat.	770 12 0	..	Tauzi No. 465/R, hissa 4 annas. Tauzi No. 465/1, hissa 12 annas. All other shares than that specified will be excluded from the sale.	Akhil Chandra Das and another. Ditto	192 11 0 578 1 0	.. ..	35 11 6 107 5 6
1910	Punshai Kismat Debi No. 7, hissa 9 annas, pargana Mehar.	671 14 5	Whole	....	Salamatulla Miah ..	..	125 15 6	..
2099	Surplus alluvial accretion 2nd and 5th parts land to Borochar No. 178, Thak No. 3566 pargana Mahabbatpur.	757 9 0	Do. ..	....	Laxmi Narayan Sukul and others.	..	20 7 8	..

Tauzi No.	Name of mahal and pargana.	Sadar jama of whole estate.	Whether the whole estate is to be sold	If only a share is to be sold, specification of such share or shares.	Names of proprietors of property to be sold	If only a share is to be sold, the sadar jama of such share	If the whole estate is to be sold, the arrears due from it.	If only a share is to be sold, the arrears due from it
1	2	3	4	5	6	7	8	9
		Rs a p				Rs a p	Rs a p	Rs. a p
2296	Sonapur and Tazpur Char, pargana Zazira	870 10 0	Whole ..	....	Mr A. M. Paruk ..	..	370 10 0	.
2665	Bisara Joar, hissa 5 as. 6 gds. 2 c. 2 kt., pargana Bardakhat	1,047 1 0	Do. ..	.. .	Prafulla kumar Roy Choudhury.	..	194 6 4	..
2749	Diara Taluk Kanta Prasad Sukul, pargana Mahabbatpur.	1,149 0 0	Do ..	....	Ganga Navaran Sukul and others		52 5 2	.
2766	Joar Siddheswari, hissa 1 a. 18 gds 3 c., pargana Bardakhat.	709 15 6	Do. ..	...	Kalipada Das Gupta and another.	..	107 0 0	..
2957	Hem Nalini Choudhurany, pargana Bardakhat.	744 14 0	Do. ..	....	Srimati Hem Nalini Choudhurany.	..	186 0 0	..
3210	Diara Char Webster, pargana Rajnagar.	775 0 0	Do. ..	....	Shiba Prosad Sukul and others.	..	18 14 5	..
3407	Madan Gopal Sukul, pargana Mehar.	1,002 8 0	Do. ..	...	Madan Gopal Sukul and others.	..	251 0 0	..
3408	Taluq Gobinda Narayan Sukul, pargana Mehar.	1,002 8 0	Do. ..	....	Gobinda Narayan Sukul and others.	..	251 0 0	..
3409	Andhehari Sukul, pargana Mehar	1,494 14 0	Do. ..	....	Rameswar Sukul and others.	..	374 0 0	..
3665	Taluq Aktar Begum, pargana Bardakhat.	1,871 14 0	Do. .	....	m Kanija Johura *alias* Fakuti Begum	..	468 0 0	..
3672	Radha krishna Choudhury, pargana Bardakhat.	558 15 0	Do. ..	....	Upendra Chandra Das and others.	..	139 0 0	..
3823	Ashraf Raja Choudhury, pargana Forkabad Tape.	768 5 0	Do		Khetra Mohan Mukhapadhaya.	..	241 6 6	..
3854	Jogendra Chandra Roy Choudhury, pargana Homnabad	678 3 0	Do .	. .	Jogendra Chandra Roy Choudhury.	..	284 11 6	.
3993	Diara Mahal Tajpur Sonapur, pargana Zazira.	1,283 6 0	Do. .		Mr. A M Parak		300 0 0	..

This notice is issued in respect of instalments of revenue due on or before the 31st Jaistha, 1343 B.S., of which the latest date of payment was 29th June 1936.

J. P. RAY, Additional Collector.

Comilla, the 14th August 1936.

Notification A.

NOTICE is hereby given under sections 6 and 13, Act XI of 1859, and under section 11, Act VII of 1868, that the undermentioned tenures and shares of tenures in the district of Tippera will be put up for sale at the office of the Collector of that district on the 21st September 1936 at 12 noon for arrears of revenue and other demands which by law are realizable as arrears of land revenue :—

Tauzi No.	Name of tenure and pargana.	Sadar jama of whole tenure.	Whether the whole tenure is to be sold.	If only a share is to be sold, specification of such share or shares.	Names of proprietors of property to be sold.	If only a share is to be sold, the sadar jama of such share.	If the whole tenure is to be sold, the arrears due from it.	If only a share is to be sold, the arrears due from it.
1	2	3	4	5	6	7	8	9
		Rs. a. p.					Rs. a. p.	
1933	Joar Krishnanagar, hissa 5 as. 6 gds. 2k. 2kt., Khatian No. 2 of Gournagar, pargana Bardakhat.	3,164 12 0	Whole ..	....	Jyotirmayee Roy Choudhurany and others.	..	1,415 15 3 Cess— 43 7 6 1,459 6 9	..
2686	Myadi Patni Taluk Durlav Ram Deb, pargana Bardakhat.	1,991 13 0	Do. ..	....	Mana Mohon Roy Choudhury.	..	890 11 4 Cess— 34 9 4 925 4 8	..
2687	Ditto ..	1,445 3 0	Do. ..	....	Upendra Lochan Majumdar and others.	..	721 15 3 Cess— 29 4 2 751 3 5	..
2691	Myadi Patni Taluk Hriday Ram Das Gupta, jote No. 47, Khatian No. 354, pargana Bardakhat.	855 4 0	Do. ..	....	Amrita Sekhar Das Gupta and others.	..	213 13 0 Cess— 12 6 6 226 3 6	..
2704	Joar Dhanpatikhola	890 9 0	Do. ..	....	Prasanna Kumar Datta and others.	..	457 3 3	..
2704	Joar Dhanpatikhola, hissa 2 as. 17 gds. 3 c. 2 kt., jote No. 2, Khatian No. 7, pargana Bardakhat.	644 15 0	Do. ..	....	Radha Charan Nath Bhoumic and others.	..	161 4 0	..
2712	Joar Kadair Patni Taluk Krishna Chandra Roy.	2,603 0 0	Do. ..	....	Kanak Lata Naha	..	962 15 3 Cess— 32 12 0 995 11 3	..
2713	Mauza Char Lalpur, pargana Bardakhat.	1,518 6 0	Do. ..	....	Bharat Chandra Roy Choudhury.	..	732 1 6	..
2726	Taluk Ram Hari Das pargana Bardakhat.	1,766 8 0	Do. ..	....	Mahendra Chandra Saha and others.	..	351 0 7 Cess— 23 15 9 375 0 4	..
2730	Mahal Sahapur Dighirpur, pargana Bardakhat.	6,608 13 0	Do. ..	....	Raj Kumar Roy Choudhury, Common Manager on behalf of Sarada Sundari Choudhurany and others.	..	1,336 3 3	..
2915	Joar Kadair Patni Taluk Krishna Chandra Roy, pargana Bardakhat.	1,258 0 0	Do. ..	....	Kanada Kishore Roy and others.	..	156 12 0 Cess— 6 7 6 163 3 6	..

This notice is issued in respect of instalments of revenue due on or before the 31st Jaistha, 1343B.S., of which the latest date of payment was 29th June 1936.

J. P. RAY, Additional Collector.

Comilla, the 14th August 1936.

Notification A.

NOTICE is hereby given, under sections 6 and 13, Act XI of 1859, that the undermentioned estates and shares of estates in the district of Bogra will be put up for sale at the office of the Collector of that district on the 25th September 1936, at 12 noon, for arrears of revenue and other demands which by law are realizable as arrears of land revenue.

When in columns 5, 7 and 9 of the following statement it is stated that only a share is to be sold, it is to be understood that a separate account is kept for that share :—

Tauzi No.	Name of mahal and pargana.	Sadar jama of whole estate.	Whether the whole estate is to be sold.	If only a share is to be sold, specification of such share or shares.	Name of proprietors of property to be sold.	If only a share is to be sold, the Sadar jama of such share.	If the whole estate is to be sold, the arrears due from it.	If only a share is to be sold, the arrears due from it.
1	2	3	4	5	6	7	8	9
		Rs. a. p.				Rs. a. p.	Rs. a. p.	Rs. a. p.
2 Resi-duary.	K. P. Shelbarsha, pargana Shelbarsha.	12,848 4 6	No. ..	6 g. 2 k. 2 kt. of mauzas Balabari, police-station Panchupur (Rajshahi), Andhusura, police-station Singra (Rajshahi), Paranpur and others, police-station Dupchanchia, Alokchhatra and others, police-station Kahaloo, Tunipara and others, police-station Sherpur, Ashrokola and others, police-station Bogra, Joydebpur and others, police-station Adamdighi, Harisona and others, police-station Taras (Pabna), Chhatua and others, police-station Shibganj, Talkhur, police-station Khetlal. 3 g. 1 k. 1 kt. of mauzas Damai and others, police-station Kahaloo, Phulbari and others, police-station Bogra. 17 g. 2 k. of mauzas Sillimpur and another, police-station Bogra. 1 a. 15 g. of mauzas Sakpala and others, police-station Bogra. 8 g. 1 k. 1 kt. of mauzas Chandimua Haripur, and others, police-station Bogra. 1 a. 6 g. 2 k. 2 kt. of mauzas Titkhur and another, police-station Bogra. 2 as. 3 g. 3 k. of mauzas Sujabad and others, police-station Bogra. 9 g. 2 k. 2 kt. 6 til of mauzas Chakbrindaban and others, police-station Bogra. All other shares than that specified will be excluded from sale.	Md. Mahafuzal Hoque Abu Talb *alias* Raja Miah.	406 4 6	..	53 1 5
2, S. A. 9.	Ditto ..	12,848 4 6	No ..	16 annas of mauza Katnahar, police-station Kahaloo. 8 annas of mauzas Damai and others, police-station Kahaloo.	Syed Abdur Rub Choudhury.	138 13 9	..	31 9 4
2, S. A. 61.	Ditto ..	12,848 4 6	No ..	3 as. 1 g. 2 k. 2 kt. of mauza Malibari, police-station Kahaloo. 1 a. 15 g. 2 k. 1 kt. 5 til of mauza Belgharia, police-station Kahaloo.	Adya Nath Bashak and others.	37 10 8	..	1 1 10

Tauzi No.	Name of mahal and pargana.	Sadar jama of whole estate.	Whether the whole estate is to be sold.	If only a share is to be sold, specification of such share or shares.	Name of proprietors of property to be sold.	If only a share is to be sold, the Sadar jama of such share.	If the whole estate is to be sold, the arrears due from it.	If only a share is to be sold, the arrears due from it.
1	2	3	4	5	6	7	8	9
		Rs. a. p.				Rs. a. p.	Rs. a. p.	Rs. a. p.
2, S. A. 103.	K. P. Shelbarsha, pargana Shelbarsha.	12,848 4 6	No ..	8 as. 8 g. 1 k. 1 kt. of mauzas Sahardighi and others, police-station Bogra.) 1 a. 8 g. 1 k. 1 kt. of mauzas Belgharia and others, police-station Dupchanchia, Kazipara and others, police-station Kahaloo, Joydebpur, police-station Adamdighi. All other shares than that specified will be excluded from sale.	Radharani Dashya Choudhurani.	593 5 3	..	35 15 8
					Total ..	1,176 2 2	..	121 12 3
43	Taraf Khadash, pargana Shelbarsha.	2,484 1 8	Yes ..	The whole estate will be sold.	Makhan Lal Dutt and others.	..	206 15 0	..
74 Residuary.	Dihi Palikandi, pargana Protapbaju.	5,561 13 10 Police— 358 6 5	No ..	1 anna of mauzas Patti Palikandi, police-station Shibganj, Bharkuthi, police-station Bogra, Rameswarpur, police-station Gabtali, Chakratinath, police-station Shariakandi. 8 annas of mauzas Bahadurpur and others, police-station Gabtali, Dakshinbhag and others, police-station Bogra, Benipara and others, police-station Shibganj, Saro and others, police-station Sherpur, Digdair, police-station Shariakandi, Patti Chapachil, police-station Bogra. 4 annas of Chapachil and another, police-station Shibganj.	Satyendra Narayan Munshi and others.	938 11 3 Police— 74 3 2	..	7 6 5 Police— 14 12 8
74, S. A. 5.	Ditto ..	5,561 13 10 Police— 358 6 5	No ..	1 a. 6 g. 2 k. 2 kt. of mauzas Rameswarpur and another, police-station Gabtali.	Mahendra Narayan Majumder.	71 6 3 Police— 4 9 3	..	4 12 6 Police— 0 7 9
74, S. A. 6.	Ditto ..	5,561 13 10 Police— 358 6 5	No ..	1 a. 6 g. 2 k. 2 kt. of mauzas Mahisabon and others, police-station Gabtali, Bharkuthi, police-station Bogra, Chakratinath, police-station Shariakandi, Patti Palikandi, police-station Shibganj. 13 g. 1 k. 1 kt. of mauzas Chapachil and another, police-station Shibganj.	Ditto ..	71 6 4 Police— 4 9 3	..	4 12 9 Police— 0 7 9
74, S. A. 7.	Ditto ..	5,561 13 10 Police— 358 6 5	No ..	1a. 2g. 2k. of mauzas Rameswarpur and others, police-station Gabtali, Bharkuthi, police-station Bogra, Chakratinath, police-station Shariakandi, Patti Palikandi, police-station Shibganj. 11 g. 1 k. of mauzas Chapachil and another, police-station Shibganj.	Radha Kishore Tarafder and another.	120 7 7 Police— 7 12 0	..	8 1 10 Police— 0 13 6
74, S. A. 8.	Ditto ..	5,561 13 10 Police— 358 6 5	No ..	2 annas of mauzas Rameswarpur and others, police-station Gabtali, Bharkuthi, police-station Bogra, Chakratinath, police-station Shariakandi, Patti Palikandi, police-station Shibganj. 1 anna of mauzas Chapachil and another, police-station Shibganj.	Radhika Mohan Munshi and others.	215 14 8 Police— 11 15 5	..	68 9 4 Police— 4 10 7

Tauzi No.	Name of mahal and pargana.	Sadar jama of whole estate.	Whether the whole estate is to be sold.	If only a share is to be sold, specification of such share or shares.	Name of proprietors of property to be sold.	If only a share is to be sold, the Sadar jama of such share.	If the whole estate is to be sold, the arrears due from it.	If only a share is to be sold, the arrears due from it.
1	2	3	4	5	6	7	8	9
		Rs. a. p.				Rs. a. p.	Rs. a. p.	Rs. a. p.
74, S. A. 9.	Dihi Palikandi, pargana Protapbaju.	5,561 13 10 Police— 358 6 5	No ..	1 anna of mauzas Rameswarpur and others, police-station Gabtali, Bharkuthi, police-station Bogra, Chakratinath, police-station Shariakandi, Patti Palikandi, police-station Shibganj. 10 gandas of mauzas Chapachil and others, police-station Shibganj.	Syama Kishore Munshi.	107 15 10 Police— 5 15 8	..	34 5 8 Police— 2 5 3
74, S. A. 10.	Ditto ..	5,561 13 10 Police— 358 6 5	No ..	1 a. 6 g. 2 k. 2 kt. of mauzas Rameswarpur and others, police-station Gabtali, Bharkuthi, police-station Bogra, Chakratinath, police-station Shariakandi, Patti Palikandi, police-station Shibganj. 13 g. 1 k. 1 kt. of mauzas Chapachil and others, police-station Shibganj.	Dwijendra Lal Majumder and others.	142 12 6 Police— 9 2 10	..	9 12 3 Police— 1 0 1
74, S. A. 11.	Ditto ..	5,561 13 10 Police— 358 6 5	No ..	1a. 15g. of mauzas Rameswarpur and others, police-station Gabtali, Bharkuthi, police-station Bogra, Chakratinath, police-station Shariakandi, Patti Palikamil, police-station Shibganj. 1a. 8g. 3k. of mauzas Chapachil and another, police-station Shibganj.	Profulla Chandra Tarafder and others.	187 6 0 Police— 12 1 0	..	12 10 0 Police— 1 5 3
74, S. A. 12.	Ditto ..	5,561 13 10 Police 358 6 5	No ..	1a. 6g. 2k. 2kt. of mauzas Mahisaban, police-station Gabtali, Bharkuthi, police-station Bogra, Chakratinath, police-station Shariakandi, Patti Palikandi, police-station Shibganj. 13g. 1k. 1kt. of mauzas Chapachil and another, police-station Shibganj.	Kali Gopal Majumder and others.	142 12 6 Police— 9 2 10	..	9 12 3 Police— 1 0 1
74, S. A. 24.	Ditto ..	5,561 13 10 Police— 358 6 5	No ..	3as. 12g. 2k. of mauzas Rameswarpur and others, police-station Gabtali, Bharkuthi, police-station Bogra, Chakratinath, police-station Shariakandi, Patti Palikandi, police-station Shibganj. 1a. 5g. of mauzas Chapachil and another, police-station Shibganj.	Debendra Kishore Tarafder and others.	390 2 0 Police— 23 0 9	..	22 0 9 Police— 2 9 2
				All other shares than that specified will be excluded from sale.	Total ..	2,388 14 11	..	182 3 9
91, S. A 1.	Dihi Ulipur, pargana Mehamansahi.	4,385 5 0	No ..	1a. 2g. 2k. of mauzas Aman and others, police-station Sherpur, Kundais and others, police-station Bogra, Sariabad, police-station Singra (Rajshahi).	Debendra Kishore Tarafder and others.	238 9 2	..	19 7 4
91, S. A. 2.	Ditto ..	4,385 5 0	No ..	1a. 2g. 2k. of above mauzas.	Radha Kishore Tarafder and another.	238 9 2	..	19 7 4
91, S. A. 3.	Ditto ..	4,385 5 0	No ..	13g. 1k. 1kt. of above mauzas.	Mahendra Narayan Majumder.	141 6 1	..	11 6 11
91, S. A. 4.	Ditto ..	4,385 5 0	No ..	1a. 6g. 2k. 2kt. of above mauzas.	Rajendra Lal Majumder.	282 12 3	..	22 12 4
91, S. A. 5.	Ditto ..	4,385 5 0	No ..	1 anna of above mauzas.	Syama Kishore Munshi and others.	212 3 6	..	16 13 9
91, S. A. 6.	Ditto ..	4,385 5 0	No ..	13g. 1k. 1kt. of above mauzas.	Mahendra Narayan Majumder.	141 6 1	..	11 6 1

Tauzi No.	Name of mahal and pargana.	Sadar jama of whole estate.	Whether the whole estate is to be sold.	If only a share is to be sold, specification of such share or shares.	Name of proprietors of property to be sold.	If only a share is to be sold, the Sadar jama of such share.	If the whole estate is to be sold, the arrears due from it.	If only a share is to be sold, the arrears due from it.
1	2	3	4	5	6	7	8	9
		Rs. a. p.				Rs. a. p.	Rs. a. p.	Rs. a. p.
91, S. A. 7.	Dihi Ulipur, pargana Mehamansahi.	4,385 5 0	No ..	2 annas of mauzas Aman and others, police-station Sherpur, Kundais and others, police-station Bogra, Sariabad, police-station Singra (Rajshahi).	Radhika Mohan Munshi and others.	424 7 0	..	34 2 8
91, S. A. 8.	Ditto ..	4,385 5 0	No ..	1a. 15g. of above mauzas.	Profulla Chandra Tarafder and another.	371 1 11	..	21 3 5
91, S. A. 9.	Ditto ..	4,385 5 0	No ..	1a. 6g. 2k. 2kt. of above mauzas.	Kali Gopal Majumder and others.	82 12 2	..	22 12 4
91, S. A. 13.	Ditto ..	4,385 5 0	No ..	2as. 10g. of above mauzas.	Radhika Mohan Munshi and others.	530 9 11	..	42 11 11
91, S. A. 15.	Ditto ..	4,385 5 0	No ..	1a. 15g. of mauzas Srirampur and others, police-station Sherpur.	Srish Chandra Sanyal.	108 7 9	..	8 10 1
				All other shares than that specified will be excluded from sale.	Total ..	2,772 5 0	..	230 14 2
97 Residuary.	Dihi Syedpur, pargana Mehamansahi.	5,327 6 2 Police— 53 5 4	No ..	16 annas of mauzas Jamur and others, police-station Sherpur, Baldipara and others, police-station Taras (Pabna), Maria and others, police-station Singra (Rajshahi), Khiali and others, police-station Raiganj (Pabna). All other shares than that specified will be excluded from sale.	Kumud Nath Choudhury	5,304 8 8 Police— 53 1 9	..	450 13 5 Police— 10 10 0
100 Residuary.	Dihi Subhagachha, pargana Mehamansahi.	3,590 6 0	No ..	8 annas of mauzas Khanpur and another, police-station Sherpur, Chandipur, police-station Singra (Rajshahi), Subhagachha, police-station Sherpur.	Nagendra Nath Sanyal and others.	112 11 3	..	4 13 7
100, S. A. 1.	Ditto ..	3,590 6 0	No ..	9 annas of mauzas Helanchapara, police-station Bogra, Baora and others, police-station Sherpur, Khodadpur and another, police-station Raiganj (Pabna). 4as. 10g. of mauza Subhagachha, police-station Sherpur. 6 annas of mauza Phukpal, police-station Singra (Rajshahi).	Kumud Nath Choudhury.	710 5 0	..	58 7 11
100, S. A. 19.	Ditto ..	3,590 6 0	No ..	3 as. 10 g. of mauzas Katham, police-station Singra (Rajshahi), Sadulbari and others, police-station Sherpur, Sengati and another, police-station Raiganj (Pabna). 1a. 15g. of mauzas Krishnapur, police-station Taras (Pabna), Gilabari and another, police-station Sherpur. 17g. 2k. of mauza Darikhaga, police-station Sherpur. 8g. 3k. of mauzas Badlason and another, police-station Singra (Rajshahi), Subhagachha, police-station Sherpur. All other shares than that specified will be excluded from sale.	Srish Chandra Sanyal. Total	247 14 1 1 070 14 4	.. ..	20 8 3 83 13 9

Tauzi No.	Name of mahal and pargana.	Sadar jama of whole estate.	Whether the whole estate is to be sold.	If only a share is to be sold, specification of such share or shares.	Name of proprietors of property to be sold.	If only a share is to be sold, the Sadar jama of such share.	If the whole estate is to be sold, the arrears due from it.	If only a share is to be sold, the arrears due from it.
1	2	3	4	5	6	7	8	9
		Rs. a. p.				Rs. a. p.	Rs. a. p.	Rs. a. p.
103	Dihi Damdighi, pargana Mehamansahi.	512 14 7	Yes ..	The whole estate will be sold.	Dhirendra Chandra Neogi and others.	..	45 11 3	..
104, S. A. 1.	Dihi Eksingh, pargana Mehamansahi.	4,026 9 10	No ..	15 gandas of mauzas Birkulla, police-station Bogra, Bhadra and others, police-station Sherpur, Idrasan, police-station Singra (Rajshahi). 1a. 14g. 1k. 8til of mauzas Darikandi, police-station Bogra, Joanpur and others, police-station Sherpur, Salimpur and others, police-station Singra (Rajshahi). 1a. 8g. 2k. 17til of mauza Barapathar, police-station Bogra. 8 g. 2 k. 16 til of manza Posi, police-station Sherpur. 15 gandas of mauza Sakdaha, police-station Dhunot.	Profulla Chandra Saha Choudhury.	188 12 1	..	15 9 7
104, S. A. 2.	Ditto ..	4,026 9 10	No ..	1 anna of mauzas Birkulla, police-station Bogra, Bhadra and others, police-station Sherpur, Sakdaha, police-station Dhunot, Indrasan, police-station Singra (Rajshahi). 2as. 5g. 2k. 2kt. 12til of mauzas Darikandi, police-station Bogra, Joanpur and others, police-station Sherpur, Salimpur and others, police-station Singra (Rajshahi). 1 a. 11 g. 1 k. 2 kt. 3 til of mauza Barapathar, police-station Bogra. 11 g. 1 k. 2 kt. 4 til of mauza Posi, police-station Sherpur	Rakhal Chandra Saha Choudhury and another.	251 10 8	..	3 2 9
104, S. A. 3.	Ditto ..	4,026 9 10	No ..	2 as. 10g. of mauzas Birkulla, police-station Bogra, Bhadra and others, police-station Sherpur, Indrasan, police-station Singra (Rajshahi). 5 as. 14 g. 1 k. 8 til of mauzas Darikandi, police-station Bogra, Joanpur and others, police-station Sherpur, Salimpur and others, police-station Singra (Rajshahi). 3 as. 18 g. 2 k. 17 til of mauza Barapathar, police-station Bogra. 1 a. 8 g. 2 k. 17 til of mauza Posi, police-station Sherpur. 2 as. 10 g. of mauza Sakdaha, police-station Dhunot. 2 annas of mauza Sherpur, police-station Sherpur.	Annapurna Choudhurani.	629 2 6	..	51 15 10
104, S. A. 8.	Ditto ..	4,026 9 10	No ..	1a. 15g. of mauzas Birkulla, police-station Bogra, Bhadra and others, police-station Sherpur, Indrasan, police-station Singra (Rajshahi). 4 annas of mauzas Darikandi, police-station Bogra, Joanpur and others, police-station Sherpur, Salimpur and others, police-station Singra (Rajshahi). 2 as. 15 g. of mauza Barapathar, police-station Bogra. 6g. 2k. 2 kt. of mauza Posi, police-station Sherpur. 1 a. 15g. of mauza Sakdaha, police-station Dhunot.	Syama Kishore Munshi and others.	440 5 10	..	36 6 6

Tauzi No.	Name of mahal and pargana.	Sadar jama of whole estate.	Whether the whole estate is to be sold.	If only a share is to be sold, specification of such share or shares.	Name of proprietors of property to be sold.	If only a share is to be sold, the Sadar jama of such share.	If the whole estate is to be sold, the arrears due from it.	If only a share is to be sold, the arrears due from it.
1	2	3	4	5	6	7	8	9
		Rs. a. p.				Rs. a. p.	Rs. a. p.	Rs. a. p.
104, S.A. 15.	Dihi Eksingh, pargana Mehamansahi.	4,026 9 10	No ..	8 as. 10 g. of mauzas Bihigram and another, police-station Bogra, Kumarghat and another, police-station Sherpur, Narateghari, police-station Taras (Pabna). 1 a. 15 g. of mauzas Chakrajib and others, police-station Sherpur, Narila, police-station Bogra. 17 g. 2 k. of mauzas Birkulia, police-station Bogra, Bhadra, police-station Sherpur, Indrasan, police-station Singra (Rajshahi), Sakdaha police-station Dhunot. 1 a. 5 g. of mauzas Karua and another, police-station Sherpur. 3 as. 15 g. of mauzas Eksingh, police-station Singra (Rajshahi). All other shares than that specified will excluded from sale.	Srish Chandra Sanyal.	250 12 3	..	20 11 8
					Total ..	1,760 11 4	..	127 14 2
148, Residuary.	Choudhurai Chhatingram, pargana Khatta.	603 8 0	No ..	9 as. 4 g. 2 k. of mauzas Panchsa and others, police-station Dupchanchia, Chiarigram and others, police-station Adamdighi, Pirojpur and others, police-station Naogaon (Rajshahi).	Radhika Mohan Munshi and others.	346 7 6	..	55 10 8
148, S.A. 1.	Ditto ..	603 8 0	No ..	6 as. 15g 2 k. of above mauzas. All other shares than that specified will be excluded from sale.	Kishori Mohan Sanyal and others.	257 0 6	..	27 4 6
					Total ..	603 8 0	..	83 0 2
192, S. A. 2.	Chhandata, pargana Dayanagar.	1,373 11 8	No ..	6 annas of mauzas Tarai and others, police-station Bogra, Uttar Debkhanda and others, police-station Kahaloo. All other shares than that specified will be excluded from sale.	Atul Krishna Baral.	515 12 4	..	25 8 0
195, Residuary.	K. P. Talukjoy, pargana Talukjoy.	1,984 6 11	No ..	2 as. 15 g. 7 til of mauzas Chhatinali, and others, police-station Panchbibi, Helkunda and others, police-station Jaipurhat.	Suresh Chandra Sarker and others.	338 11 9	..	14 4 10
195, S.A. 3.	Ditto ..	1,984 6 11	No ..	2 as. 10 g. of mauzas Pamal and others, police-station Panchbibi, Helkunda and others, police-station Jaipurhat.	Surendra Nath Chattopadhya and others.	310. 6 6	..	33 14 6
195, S.A.14.	Ditto ..	1,984 6 11	No ..	16 g. 2 k. of mauzas Pamal and others, police-station Panchbibi, Helkunda and others, police-station Jaipurhat.	Hemanta Kumar Sarker and others.	102 8 6	..	11 2 7
					Total ..	751 10 9	..	59 5 11

Tauzi No.	Name of mahal and pargana.	Sadar jama of whole estate.	Whether the whole estate is to be sold.	If only a share is to be sold, specification of such share or shares.	Name of proprietors of property to be sold.	If only a share is to be sold, the Sadar jama of such share.	If the whole estate is to be sold, the arrears due from it.	If only a share is to be sold, the arrears due from it.
1	2	3	4	5	6	7	8	9
		Rs. a. p.				Rs. a. p.	Rs. a. p.	Rs. a. p.
209, Residuary.	Dihi Magura, pargana Shibpur.	4,566 14 4	No ..	1 a. 15 g. 2 k. 13 til of mauzas Khorna and others, police-station Bogra and Abilamba and others, police-station Kahaloo.	Sasibala Debi ..	507 6 11	..	75 12 5
209, S. A. 2.	Ditto ..	4,566 14 4	No ..	5as. 6 g. 2 k. 2 kt. of mauzas Khorna and others, police-station Bogra, Abilamba and others, police-station Kahaloo.	Upendra Chandra Choudhury.	1,522 4 10	..	75 12 4
209, S. A. 4.	Ditto ..	4,566 14 4	No ..	5 as. 6 g. 2 k. 2 kt. of mauzas Khorna and others, police-station Bogra, Abilamba and others, police-station Kahaloo. All other shares than that specified will be excluded from sale.	Digendra Nath Sarker and others.	1,522 4 9	..	73 12 3
					Total ..	3,552 0 6	..	225 5 0
684, Residuary.	Shekta and others pargana Khangoir.	648 11 10	No ..	11 as. 10 g. of mauzas Sekta and others, police-station Panchbibi.	Baram Uddin Choudhury.	466 9 5	..	46 13 5
684, S. A. 1.	Ditto ..	648 11 10	No ..	2 as. 10 g. of above mauzas.	Baram Uddin Choudhury and others.	101 0 1	..	7 2 10
684, S. A. 4.	Ditto ..	648 11 10	No ..	2 annas of mauzas Sekta and others, police-station Panchbibi. All other shares than that specified will be excluded from sale.	Baram Uddin Choudhury.	81 2 4	..	8 14 4
					Total ..	648 11 10	..	62 14 7
688	Nandura and others, pargana Apoil.	676 9 3	Yes ..	The whole estate will be sold.	Gobinda Madhab Deb and others.	..	46 9 3	..

This notice is issued in respect of instalments of revenue which were due on or before the 31st Jaistha, 1343 B.S., of which the latest date of payment was 28th June 1936.

T. I. M. NURANNABI CHAUDHURI, Collector.

Bogra, the 19th August 1936.

Notification A.

NOTICE is hereby given under sections 6 and 13, Act XI of 1859, that the undermentioned estates and shares of estates in the district of Faridpur will be put up for sale at the office of the Collector of that district on the 24th September 1936 at 11 a.m. for arrears of revenue (and other demands which by law are realizable as arrears of land revenue).

When in columns 5, 7 and 9 of the following statement it is stated that only a share is to be sold, it is to be understood that a separate account is kept for that share :—

Tauzi No.	Name of mahal and pargana.	Sadar jama of whole estate.	Whether the whole estate is to be sold.	If only a share is to be sold, specification of such share or shares.	Names of proprietors of property to be sold.	If only a share is to be sold, the sadar jama of such share.	If the whole estate is to be sold, the arrears due from it.	If only a share is to be sold, the arrears due from it.
1	2	3	4	5	6	7	8	9
		Rs. a. p.				Rs. a. p.	Rs. a. p	Rs. a. p.
250	Taluk Panchas Hazari Char, pargana Kasimnagor.	4,289 0 0	Whole	....	Amarendra Nath Roy and others.	..	200 15 9	.
1141	Taluk Narayanpur Kismat, pargana Telihati Amirabad.	8,659 6 11	No ..	Residuary share consisting of 12 annas only. All other shares than that specified above will be excluded from sale, viz., S. A. No. 1 of 4 annas.	Nanibala Dasi as guardian and another.	1,994 8 11	..	347 2 11
2436	Taluk Brajanath Pal Chowdhury, pargana Satair.	42,278 3 0	No ..	Residuary share consisting of 5 annas only. S. A. No. 1 consisting of 6 annas. S. A No. 5 consisting of 2 annas. All other shares than those specified above will be excluded from sale, viz., S. A. No. 3 of 2 annas and S A. No. 6 of 1 anna.	Sital Bala Debi .. Sarat Chandra Goswami. Ditto ..	13,207 4 9 15,873 9 1 5,291 15 9	.. .. ..	4,392 13 3 11,634 8 10 1,769 1 10
6467	Taluk Alexander Thomas Saheb, Surplus alluvial accretion to Badrasan known as Gopalpur, pargana Balkanthapur.	1,263 0 0	Whole	....	Lala Rajendra Kumar Basu and others.	..	34 8 9	..
6518	Excess land of mauza Salepur, pargana Nasti.	1,455 0 0	Do. ..	....	Dinesh Chandra Chatterjee and another.	..	181 0 0	..
6692	Deara Taluk Amrita Nath Das, pargana Makimpur.	663 0 0	No ..	Residuary share consisting of 12 annas. All other shares than that specified above will be excluded from sale, viz., S A No. 1 consisting of 4 annas.	Rabindra Kumar Sarkar as guardian.	497 4 0	..	61 14 0
6771	Deara taluk Fazl-ali Khan, pargana Kasimpur, Shehalapatti.	7,627 0 0	Whole	....	Md. Israil Chowdhury, Receiver, Gopalpur Wakf Estate.	..	6,166 0 8	..

N.B.—This notification is issued in respect of instalments of revenue due on or before the 31st Jaistha, 1343 B.S., of which the latest date of payment was 29th June 1936.

Faridpur, the 20th August 1936.

[ILLEGIBLE], *for* Collector.

Notification A.

NOTICE is hereby given under sections 6 and 13, Act XI of 1859, that the undermentioned estates and shares of estates in the district of Pabna will be put up for sale at the office of the Collector of that district on the 24th day of September 1936, at 12 noon, for arrears of revenue and other demands which by law are realisable as arrears of land revenue.

When in columns 5, 7 and 9 of the following statement it is stated that only a share is to be sold, it is to be understood that a separate account is kept for that share:—

Tauzi No.	Name of mahal and pargana.	Sadar jama of whole estate.	Whether the whole share is to be sold.	If only a share is to be sold, specification of such share or shares.	Names of proprietors of property to be sold.	If only a share is to be sold, the Sadar jama of such share.	If the whole estate is to be sold, the arrears due from it.	If only a share is to be sold, the arrears due from it.
1	2	3	4	5	6	7	8	9
		Rs. a. p.				Rs. a. p.	Rs. a. p.	Rs. a. p.
7	Zemindary Pargana Ishafsahi, Dehi Haripur, pargana Ishafsahi.	1,301 7 0	..	Residuary share—2as. 13 gds. 1c. 1 kt. share of Bayrahat. 8 annas share of Barangail. 2 as. 13 gds. 1c. 1kt. share of Biandaha *alias* Shahzadpur, Raghunathpur. 8 annas share of Chinadhukurja, Gope Rekhl, Katalia. 9 as. 3gds. 1c. 1 kt. share of Dhitpur Kashinagar. 10 as. 13gds. 1c. 1kt. share of Paikhamakhal *alias* Shafaranol. All other shares than that specified will be excluded from the sale.	Himangsu Sekhar Talukdar and others.	590 12 0	..	41 4 0 Police— 5 15 0
25	K. T. Siba Prasad Das Roy, pargana Ishafsahi.	1,025 0 0	..	Residuary share—8as. 11 gds. 3c. share of the estate. All other shares than that specified will be excluded from the sale.	Nikunja Lal Pakrashi and others.	550 4 0	..	67 7 3
175	Kharija Taluk Md. Hafiz, pargana Amirabad.	3,156 9 0	..	Residuary share—7as. 14 gds. 1c. 1 dip share of the estate. All other shares than that specified will be excluded from the sale.	Brajendra Krishna Datta and others.	1,521 15 0	..	497 5 0 Police— 13 1 0
205	Zemindary Pargana Katarmahal, pargana Katarmahal.	1,560 0 0	..	Residuary share— 11as. 17 gds. 2c. share of Bolait, Durgaram Bakshi chak Pansha, Gariswarkismat, Ghargram kismat with chak Harirampur. 13 as. 5gds. share of Gobindapur chak. 11as. 17gds. 2c. share of Sajna with chak Prankrisna Siddhanta. All other shares than that specified will be excluded from the sale.	Jogesh Ch. Bhaumik and others.	1,275 3 0	..	274 9 0 Police— 8 5 0
2182	Zemindary Pargana Mehamanshahi, Dehi Kashipur, pargana Mehamanshahi.	3,059 12 0	..	Residuary share—3 as. 3 gds. 24k. share of the estate excepting mauza Deoghar. 3 annas share of mauza Deoghar.	Gopal Ch. Bhaumik Chaudhury as sebait of Sree Sree Radhagobinda Bigraha and others.	685 10 11	..	435 10 11 Police— 6 14 11
2182	Ditto ..	3,059 12 0	..	S. A. No. 1—4 annas share of the estate. All other shares than that specified will be excluded from the sale.	Shyama Kishore Munshi and others.	914 15 0	..	354 6 9 Police— 12 3 3

These estates are advertised for sale for instalments of revenue which were due on or before the 31st Jaistha, 1343 B.S., of which the latest date of payment was the 29th June 1936.

Pabna, the 21st August 1936.

S. N. BATABYAL, *for* Collector.

Notification A.

NOTICE is hereby given, under sections 6 and 13, Act XI of 1859, that the undermentioned estates and shares of estates in the district of Rajshahi, will be put up for sale at the office of the Collector of that district on the 23rd September 1936, at 12 noon, for arrears of revenue (and other demands which by law are realisable as arrears of land revenue).

When in columns 5, 7 and 9 of the following statement it is stated that only a share is to be sold, it is to be understood that a separate account is kept for that share :—

Tauzi No.	Name of mahal and pargana.	Sadar jama of whole estate.	Whether the whole estate is to be sold.	If only a share is to be sold, specification of such share or shares.	Names of proprietors of property to be sold.	If only a share is to be sold, the sadar jama of such share.	If the whole estate is to be sold, the arrears due from it.	If only a share is to be sold, the arrears due from it.
1	2	3	4	5	6	7	8	9
		Rs. a. p.				Rs. a. p.	Rs. a. p.	Rs. a. p.
179	Kasimpur, pargana Kasimpur.	1,937 15 0	No ..	S. A. No. 2—18 g. 2 kr. 2 dt.	Mohini Kanta Choudhuri and others.	110 6 0	..	L. R.— 41 5 0
				S. A. No. 5—2 as. 15 g. 1 kr. ½dt.	Nikunja Behari Choudhuri and others.	333 11 0	..	L. R.— 377 9 0
				S. A. No. 7—1 a. 5 g. 1 c. $1^{11}/_{12}$ dt.	Narendra Nath Choudhuri and others.	242 2 0	..	L. R.— 34 0 0
				All other shares besides those specified above will be excluded from the sale.				
222	Shibdebpara, pargana Tegachi.	2,515 9 0 Police— 25 10 0	No ..	Ejmali share—7 as. 10g.	Khandaker Fazle Kadir Abu Jamin and others.	1,179 3 0 Police— 12 0 0	..	L. R.— 191 9 6 Police— 0 5 11
				S. A. No. 1—2 as. 10 g. 1 c. 1 kr. 2½ dt. $^{6}/_{21}$ job.	Mahamad Abdul Hamid and others.	396 3 6 Police— 3 14 6	..	L. R.— 13 0 3
				S. A. No. 2—4 annas ..	Bibi Hafejatan Nessa Unmatan Fatema Choudhurani.	628 14 0 Police— 6 7 0	..	L. R.— 265 0 0
				S. A. No. 5—10 gandas	Choudhuri Ahamad Abdul Wasay.	78 9 9 Police— 0 12 10	..	L. R.— 0 4 0 Police— 0 2 10
				All other shares besides those specified above will be excluded from the sale.				
229	Dihi Simulia, pargana Tegachi.	1,703 13 0 Police— 12 13 0	No ..	Ejmali share—12 annas	Bhubaneswar Singh and others.	325 0 0 Police— 2 8 0	..	L. R.— 2 15 1 Police— 0 5 3
				The above share is in respect of mauza Sreepur.				
				S. A. No. 2—4 annas ..	Anadi Prasanna Datta, sebait of Iswari Joy Kali Thakurani and others.	317 10 0 Police— 2 6 0	..	L. R.— 34 5 0 Police— 0 10 0
				The above share is in respect of mauzas Paharpur and others.				
				All other shares besides those specified above will be excluded from the sale.				
230	Dihi Dhankora, pargana Tegachi.	4,556 15 0 Police— 10 11 0	No ..	Ejmali share—1 a. 17 g. $\frac{13399}{15066}$ til.	Syed Mahamad Abdulla and others.	524 5 0 Police— 1 2 3	..	L. R.— 15 8 6
				S. A. No. 6—2 as. 9 g. 1 c. 2 kg.	Maulvi Mohamed Choudhury Nural Haq Abul Faiz.	703 6 0 Police— 1 9 0	..	L. R.— 238 8 0
				S. A. No. 7—2 as. 9 g. 1 c. 2 kg.	Bibi Hafejatan Nessa Unmatan Fatema Choudhurani.	703 8 0 Police— 1 10 0	..	L. R.— 326 5 0
				S. A. No. 8—1 a. 1 g. 2 c. 1 kg. 10 til.	Haji Khandakar Maulvi Md. Mahasin Khan Bahadur and others.	307 13 0 Police— 0 11 0	..	L. R.— 124 12 6
				S. A. No. 9—1 a. 1 g. 2 c. 1 kg. 10 til.	Khandakar Fazle Kader Abu Jamin and others.	307 13 0 Police— 0 11 0	..	L. R.— 111 4 3
				S. A. No. 19—6 g. 2 kg. $15^{3}/_{5}$ til.	Choudhuri Ahamad Abdul Wasay.	88 0 0 Police— 0 3 5	..	L. R.— 11 6 0
				All other shares besides those specified above will be excluded from the sale.				

Tauzi No.	Name of mahal and pargana.	Sadar jama of whole estate.	Whether the whole estate is to be sold.	If only a share is to be sold, specification of such share or shares.	Names of proprietors of property to be sold.	If only a share is to be sold, the sadar jama of such share.	If the whole estate is to be sold, the arrears due from it.	If only a share is to be sold, the arrears due from it.
1	2	3	4	5	6	7	8	9
		Rs. a. p.				Rs. a. p.	Rs. a. p.	Rs. a. p.
254	Dihi Bansila, pargana Gobindapur.	3,918 2 0 Police— 39 8 0	No ..	Ejmali share—4 annas	Nirod Bala Debi, sebait of Sree Sree Iswar Salagram Sila Bigraha Deb Thakur.	979 8 0 Police— 9 14 0	..	L. R.— 104 15 0 Police— 2 7 0
				S. A. No. 3—2 as. 10 g.	Srish Chandra Sanyal.	612 3 0 Police— 6 3 0	..	L. R.— 65 9 0 Police— 1 8 0
				All other shares besides those specified above will be excluded from the sale.				
274	Sujanagar, pargana ditto.	5,054 7 0 Police— 33 1 0	No ..	Ejmali share—4 annas	Maharaja Bahadur Singh.	1,263 9 6 Police— 8 5 0	..	L. R.— 140 1 0 Police— 0 9 0
				All other shares besides that specified above will be excluded from the sale.				
288	M. Ghasigaon and others, pargana Bongaon Khalisa.	2,067 1 0 Police— 22 6 0	No. ..	Ejmali share—10 annas	Md. Makbul Haq Choudhury and others.	1,291 15 0 Police— 13 15 0	..	L. R.— 11 5 9 Police— 0 0 3
				All other shares besides that specified above will be excluded from the sale.				
303	Dhamin, pargana ditto.	2,195 0 1	No. ..	Ejmali share—6 as. 16 g.	Khandaker Md. Mohasin and others.	933 4 2	..	L. R.— 68 5 0
				S. A. No. 1—2 as. 11 g. 3 c. 2 13/36 dt. 2 6/31 Job.	Syed Md. Abdulla and others.	355 11 9	..	L. R.— 13 6 0
				S. A. No. 4—10 gandas	Choudhury Ahamed Abdul Wasay.	68 9 6	..	L. R.— 5 2 0
				S. A. No. 6—4 as. 14 g.	Bibi Waslatan Nessa Ummatan Ayesha Choudhurani.	644 12 6	..	L. R.— 142 10 6
				All other shares besides those specified above will be excluded from the sale.				
304	Jahanabad, pargana Dhamin.	792 0 0	Whole	..	Nalinakshi Choudhury, executrix to the estate of late Gokul Chandra Choudhury.	..	L. R.— 160	..
307	Dhamin, pargana Dhamin.	4,298 9 9	No ..	Ejmali share—7 as. 6g. 1 kg. 10 ½ ch.	Hira Lal Ghosh and others.	1,982 9 9	..	L. R.— 140 11 6
				All other shares besides that specified above will be excluded from the sale.				
430	Dihi Brichapila, pargana Tappe Chapila.	3,274 14 0	No ..	Ejmali share—3 as. 10g.	Syed Sha Abdul Ali Abu Mojahar and others.	716 5 6	..	L. R.— 227 4 6
				S. A. No. 1—2 as. 12 g. 1 c. 2 dt. 1 6/31 Job.	Khandakar Fazle Kadir Abu Jamin and others.	535 5 0	..	L. R.— 96 8 3
				S. A. No. 4—10 gandas	Choudhuri Ahamed Abdul Wasay.	102 5 6	..	L. R.— 8 15 11
				S. A. No. 5—4 annas	Maulvi Choudhuri Md. Nural Haq Abul Faiz and others.	818 10 9	..	L. R.— 241 2 9
				S. A. No. 6—4 annas	Bibi Haflatan Nessa Ummatan Fatema Choudhurani.	818 10 9	..	L. R.— 91 15 0
				All other shares besides those specified above will be excluded from the sale.				
433	Dihi Hristi Naogaon, pargana Chapila	802 6 0 Police— 6 6 0	No. ..	Ejmali share—3 as. 10g. ..	Khandakar Md. Fazle Kadir Abu Jamin and others.	174 11 6 Police— 1 5 6	..	L. R.— 43 3 7
				S. A. No. 1—3as. 16 g. 3 c. 2 kr.	Md. Abdul Hamid Mutowali to the estate of Delwar Hossain Wakf Estate.	193 12 0 Police— 1 9 0	..	L. R.— 11 4 9

Tauzi No.	Name of mahal and pargana.	Sadar jama of whole estate.	Whether the whole estate is to be sold.	If only a share is to be sold, specification of such share or shares.	Names of proprietors of property to be sold.	If only a share is to be sold, the sadar jama of such share.	If the whole estate is to be sold, the arrears due from it.	If only a share is to be sold, the arrears due from it.
1	2	3	4	5	6	7	8	9
		Rs. a. p.				Rs. a. p.	Rs. a. p.	Rs. a. p.
				S. A. No. 2—4 annas	Choudhury Md. Golam Mortuja and others.	200 9 0 Police— 1 10 0	..	L. R.— 21 11 0
				S. A. No. 4.—4 annas ..	Maulvi Choudhury Md. Nural Haq Abul Faiz and others.	200 9 6 Police— 1 9 6	..	L. R.— 21 9 2 Police— 0 4 5
				All other shares besides those specified above will be excluded from the sale.				
483	Ispenjarpur *alias* Damsha, pargana Mohamedpur.	4,710 14 0	Whole	....	Dharani Kumar Ghose and others.	..	L. R.— 537 2 0	..
1845	Jiasundhu, pargana ditto.	6,411 5 0 Police— 64 4 0	No ..	Ejmali share—14 as. 11 g. 2 c. 2 kr.	Prafulla Kumar Basak and others.	5,843 10 0 Police— 58 9 0	..	L. R.— 66 15 2
				All other shares besides that specified above will be excluded from the sale.				
2239	Bongaonjalgh, pargana ditto.	1,323 10 0 Police— 13 5 0	Whole	....	Kishori Mohon Choudhury and others.	..	L. R.— 103 6 3 Police— 2 13 3	..
2278	Dihi Puthia, pargana Mohamadpur.	1,636 1 0	Do. ..	....	Maulvi Choudhury Md. Nural Haq Abul Faiz and others.	..	L. R.— 471 11 3	..
2279	Ditto ..	1,636 1 0	Do. ..	....	Choudhury Golam Mortuja and others.	..	L. R.— 135 7 6	..
2280	Ditto ..	715 13 0	Do. ..	....	Khandakar Fazle Kadir Abu Jamin and others.	..	L. R.— 261 0 6	..
2281	Ditto ..	715 13 0	Do. ..	....	Syed Sha Md. Abdul Hafez and others.	..	L. R.— 351 4 6	..
2361	Dihi Rona Bari including Parisow, pargana Mohamadpur.	1,507 1 7 Police— 11 0 0	No ..	Ejmali share—14 annas	Choudhury Md. Jille Kadir and others.	1,318 11 7 Police— 9 10 0	..	L. R.— 635 4 5 Police— 3 1 10
				S. A. No. 1.—2 annas	Choudhuri Md. Abdul Azim Abu Ahamad *alias* Abul Moktar and others.	188 6 0 Police— 1 6 0	..	L. R.— 4 1 6
				All other shares besides those specified above will be excluded from the sale.				

This notice is issued in respect of all the tauzis mentioned above with regard to instalments of revenue due on or before 31st Jaistha, 1343 B.S., of which the latest date of payment was 30th June 1936, and in respect of tauzi Nos. 179/2, 179/5, 222Ej., 222/2, 229Ej., 230/6, 230/7 230/8, 230/9, 303/6, 430Ej., 430/1, 430/5, 433Ej., 2278, 2280, 2281 and 2361 Ej. for instalments of revenue due on or before 29th Falgoon, 1342 B.S., of which the latest date of payment was 28th March 1936, and in respect of tauzi Nos. 179/5, 2281 for instalments of revenue due on or before 30th Agrahayan, 1342 B.S., of which the latest date of payment was 13th January 1936, and in respect of tauzi No. 179/5 for instalments of revenue due on or before 30th Falgoon, 1341 B.S., 32nd Jaistha and 31st Bhadra, 1342 B.S., of which the latest dates of payments were 28th March 1935, 28th June and 28th September 1935, respectively, and in respect of tauzi Nos. 179/7 for instalments of revenue due on or before 32nd Jaistha, 1341 B.S., of which the latest date of payment was 28th June 1934.

Rajshahi, the 22nd August 1936.

K. K. HAJARA, Collector.

Notification A.

NOTICE is hereby given under sections 6 and 13, Act XI of 1859, that the undermentioned estates and shares of estates in the district of Burdwan will be put up for sale at the office of the Collector of that district on the 24th September 1936, at 12 noon, for arrears of revenue and other demands, which by law are realizable as arrears of land revenue.

When in columns 5, 7 and 9 of the following statement it is stated that only a share is to be sold, it is to be understood that a separate account is kept for that share :—

Tauzi No.	Name of mahal and pargana.	Sadar jama of whole estate.	Whether the whole estate is to be sold.	If only a share is to be sold, specification of such share or shares.	Names of proprietors of property to be sold.	If only a share is to be sold, the Sadar jama of such share.	If the whole estate is to be sold, the arrears due from it.	If only a share is to be sold, the arrears due from it.
1	2	3	4	5	6	7	8	9
		Rs. a. p.				Rs. a. p.	Rs. a. p.	Rs. a. p.
6237	Kalyanpur, pargana Ambika.	863 10 4	Whole ..	....	Entaz Ali Sarcar and others.	..	325 3 0 March 1936— 210 9 7 June 1936— 114 9 5 325 3 0	..
101	Chandpur, pargana Amirabad.	1,740 8 3	Do. ..	....	Indoo Bhusan Mallik and others.	..	52 4 10 March 1936— 0 12 7 June 1936— 51 8 3 52 4 10 Police Revenue— 4 12 9	..
179	Musthal, pargana Aurangabad.	2,461 13 11	..	Residuary—4 annas. All other shares than that specified will be excluded from the sale.	Hori Lal Saha and others.	615 7 5	..	91 1 0
19	Gidhgram, pargana Arsha.	7,308 12 0	..	S. A. No. 12—1 a. 6 g. 2 k. 2 cr. All other shares than that specified will be excluded from the sale.	Sidheswar Banerjee and others.	609 3 0	..	76 4 9
20	Bishnupur, pargana Bagha.	62,970 13 0	..	S. A. No. 5—13 g. 2 k. 2 cr. All other shares than that specified will be excluded from the sale.	Dina Nath Tewari and others.	2,694 1 0	..	1,288 0 0 January 1936— 66 0 0 March 1936— 922 0 0 June 1936— 300 0 0 1,288 0 0
21	Mahata, etc., pargana Bagha.	11,669 3 0	..	Residuary—13 as. 16 g. 1 k. 2½ dt. All other shares than that specified will be excluded from the sale.	Brojendra Lal Dass and others.	10,288 1 3	..	28 9 0
				S. A. No. 2—1a. 5g. 3k. 2cr. 14dt. All other shares than that specified will be excluded from the sale.	Satindra Nath Panja and others.	947 11 9	..	124 14 7 March 1936— 83 13 0 June 1936— 41 1 7 124 14 7
93	Karui, pargana Bandelmagar.	1,399 7 6	Whole ..	....	Bankesh Sanyal and others.	..	755 8 0 January 1936— 186 15 5 March 1936— 480 0 1 June 1936— 88 8 6 755 8 0	..
24	Kashinathpur etc., pargana Dhenya.	3,402 15 0	..	Residuary—8as. 13g. 1k. 1cr.	Indoomati Debi, guardian of Bandya Nath Roy.	1,729 8 0	..	680 7 7½ March 1936— 462 5 5 June 1936— 218 2 2½ 680 7 7½
				S. A. No. 2—5as. 6g. 2k. 2cr. All other shares than that specified will be excluded from the sale.	Panchugopal Mukherjee.	1,064 5 0	..	438 4 11½ March 1936— 304 1 2 June 1936— 134 39 9½ 438 4 11½
49	Srikhanda, pargana Dhenya.	6,292 9 7	Whole ..	....	Bibhuti Chand Kapoor.	..	808 8 0	..

Tauzi No.	Name of mahal and pargana.	Sadar jama of whole estate.	Whether the whole estate is to be sold.	If only a share is to be sold, specification of such share or shares.	Names of proprietors of property to be sold.	If only a share is to be sold, the Sadar jama of such share.	If the whole estate is to be sold, the arrears due from it.	If only a share is to be sold, the arrears due from it.
1	2	3	4	5	6	7	8	9
		Rs. a. p.				Rs. a. p.	Rs. a. p.	Rs. a. p.
64	Jageswardihi, pargana Dhenya.	3,953 6 0	..	S. A. No. 1—8 annas All other shares than that specified will be excluded from the sale.	Bibhuti Bhusan Paul Choudhury and others.	1,976 11 0	..	254 1 1
62	Palsona, pargana Dhenya.	7,400 11 11	..	Residuary—8as. 6g. 2cr. ½dt.	Suprovat Chandra and others.	3,843 5 11	..	3,163 3 4 March 1935— 185 0 9 September 1935— 13 2 9 January 1936— 1,270 8 6 March 1936— 1,247 0 3 June 1936— 447 7 1 3,163 3 4
				S. A. No. 1—2 annas	Ditto	925 1 6	..	Police Revenue— 48 11 7 302 13 3 March 1936— 242 2 2 June 1936— 120 11 1 362 13 3
								Police Revenue— 1 11 8
				S. A. No. 5— 1a. 5g. 2½dt.	Dhanapati Chandra and others.	579 12 9	..	272 6 11 January 1936— 88 12 11 March 1936— 133 3 0 June 1936— 50 7 0 272 6 11
				S. A. No. 7—1a. 2g. 1k. 1cr. 3½dt. All other shares than that specified will be excluded from the sale.	Monoroma Dasi	518 12 0	..	67 0 0
5171	Haldi, etc., pargana Burdwan.	1,550 0 0	Whole..	....	Panchugopal Mukherjee.	..	621 13 6	..
5174	Salkuni, pargana Burdwan.	1,687 4 6	..	Residuary—8 annas of mauzas Dhandalsu, Kumrun, Sukuni and Mandarbati. All other shares than that specified will be excluded from the sale.	Kazi Mohamad and others.	839 5 6	..	373 9 0
5248	Deypara, pargana Burdwan.	787 7 0	Whole..	....	Panchugopal Mukherjee and others.	..	312 15 0	..
80	Kaitara, pargana Champainagar.	1,890 8 6	Do. ..	....	Pulin Chandra Dawn.	..	384 8 6	..
27	Sahapur, pargana Jahangirabad.	8,506 3 0	Do. ..	....	Bhola Nath Saha and others.	..	6,276 0 6	..
75	Nimdaha, etc., pargana Jahangirabad.	8,789 0 7	..	Residuary—15 as. 3 g. 2 k. 2 cr. All other shares than that specified will be excluded from the sale.	Charu Chandra Saha.	8,338 5 7	..	1,089 9 0
134	Chhutipur Deopoora *alias* Kischhutipara, pargana Chhutipur.	990 6 5	Whole..	....	Durgesnandini Debi as sebait of Ram Sita Jew Sridhar Jew and Siba Thakur.	..	301 3 3	..
115	Kischhutipur *alias* Chhutipur, pargana Chhutipur.	1,017 12 4	..	Residuary—5 as. 6 g. 2 k. 2 cr.	Jogendra Chandra Basu Choudhury and others.	639 4 1	..	27 5 5
				S. A. No. 1—5 as. 6 g. 2 k. 2 cr. All other shares than that specified will be excluded from the sale.	Atal Behari Basu Choudhury and others.	639 4 1½	..	9 13 1½

Tauzi No.	Name of mahal and pargana.	Sadar jama of whole estate.	Whether the whole estate is to be sold.	If only a share is to be sold, specification of such share or shares.	Names of proprietors of property to be sold.	If only a share is to be sold, the Sadar jama of such share.	If the whole estate is to be sold, the arrears due from it.	If only a share is to be sold, the arrears due from it.
1	2	3	4	5	6	7	8	9
		Rs. a. p.				Rs. a. p.	Rs. a. p.	Rs. a. p.
116	Kishbutipur *alias* Chhutipur, pargana Chhutipur.	553 8 8	Whole ..	....	Golam Nabi Sarcar and another as Motowalli.	..	171 11 10 March 1936— 127 1 0 June 1936— 44 10 10 171 11 10	..
118	Ditto ..	553 8 8	Do. ..	....	Suresh Chandra Mitra and others.	..	290 8 7 September 1935— 22 9 8 January 1936— 138 7 5 March 1936— 129 7 6 290 8 7	..
119	Ditto ..	553 8 8	Do. ..	....	Golam Nabi Sarcar and others as Motowalli.	..	170 10 9	..
124	Chandipur, pargana Chhutipur.	820 4 2	Do. ..	....	Durgesh Nandini Debi and another.	..	90 10 7	..
135	Gouripur, pargana Chhutipur.	1,219 5 9	..	Residuary—7 as. 7 g. 55629 1 k. 2 ——— dt.= 234117 All other shares than that specified will be excluded from the sale.	Nitya Gopal Singha and others.	561 5 9	..	7 4 2
6238	Ram Krishnapur, pargana Kutabpur.	2,631 12 0	..	Residuary—8 annas	Bisheswarnath Saha and others.	1,315 14 0	..	339 6 0 March 1936— 213 8 0 June 1936— 125 14 0 339 6 0
				S. A. No. 1—8 annas All other shares than that specified will be excluded from the sale.	Jnanendra Narayan Choudhury and others as sebait of Radhagobinda Jew Thakur.	1,315 14 0	..	369 6 0 March 1936— 243 8 0 June 1936— 125 14 0 369 6 0
65	Majedalia, pargana Patuli.	9,381 6 9	..	S. A. No. 1—2as. 18g. 1k. 1cr.	Ram Ranjan Mallik and others.	1,566 9 6	..	469 7 8 March 1936— 265 1 0 June 1936— 204 6 8 469 7 8
				S. A. No. 2—2as. 13g. 1k. 1cr.	Sibaram Chakravarty.	1,566 9 6	..	544 6 2 March 1936— 339 15 6 June 1936— 204 6 8 544 6 2
				S. A. No. 6—1a. 15 g. 2 k. 2 dt.	Amio Prosad Mallik.	1,044 6 6	..	749 13 3 March 1936— 749 13 3
				S. A. No. 7—1a. 15 g. 2 k. 2 dt. All other shares than that specified will be excluded from the sale.	Panchu Gopal Chakravarty.	1,044 10 2	..	316 5 11 March 1936— 180 1 0 June 1936 136 4 11 316 5 11
72	Patuli, pargana Patuli.	5,786 12 8	..	S. A. No. 3—2as. 13 g. 1 k. 1cr. All other shares than that specified will be excluded from the sale.	Surendrabala Debi.	964 7 5	..	418 2 5 March 1936— 292 7 2 June 1936— 125 11 3 418 2 5
107	Islampur, etc., pargana Mandanipur.	3,057 12 0	..	S. A. No. 3—4as. 13 g. 1 k. 1 cr. 1½dt.	Ashutosh Chandra Mitra as sebait of Lakshmi Narayan Radharaman and Radhika Jew.	1,154 14 0	..	51 11 1
				S. A. No. 4—3as. 3g. 2k. 1cr. ½dt. All other shares than that specified will be excluded from the sale.	Ashutosh Chandra Mitra and others.	786 8 0	..	11 5

Tauzi No.	Name of mahal and pargana.	Sadar jama of whole estate.	Whether the whole estate is to be sold.	If only a share is to be sold, specification of such share or shares.	Names of proprietors of property to be sold.	If only a share is to be sold, the Sadar jama of such share.	If the whole estate is to be sold, the arrears due from it.	If only a share is to be sold, the arrears due from it.
1	2	3	4	5	6	7	8	9
		Rs. a. p.				Rs. a. p.	Rs. a. p.	Rs. a. p.
51	Berowa, pargana Ranihati.	2,486 11 0	Whole ..	....	Jamini Mohan Nandi Choudhury and others.	..	87 2 6	
99	Kismat Bhowanipur, pargana Ranihati.	737 14 0	Do. ..	....	Baidya Nath Chatterjee.	..	97 1 5	..
170	Santoshpur, pargana Raipur.	638 6 6	Do. ..	....	Sankar Kinkar Hazra and others.	..	69 13 11	..
178	Sahapur, pargana Raipur.	501 0 8	Do. ..	....	Narendra Nath Sen and others.	..	444 3 5 January 1936— 199 1 9 March 1936— 154 14 1 June 1936— 90 3 7 444 3 5	..
55	Chhota Balnan, pargana Samarshahi.	3,444 0 7	..	S. A. No. 1—10 as. 13 g. 1 k. 1 cr. All other shares than that specified will be excluded from the sale.	Jogot Durlav Shome.	2,296 0 5	..	490 9 6 March 1936— 190 10 7 June 1936— 299 14 11 490 9 6
158	Samudragarh, pargana Satsaika.	2,709 12 6	Whole ..	....	Kumar Krishna Nandi Choudhury and others.	..	57 8 0	..
159	Asburi, pargana Satsaika.	2,260 9 11	Do. ..	....	Abdul Ohid Bara and others.	..	52 8 7 March 1936— 5 7 10 June 1936— 47 0 9 52 8 7	..
5296	Kasba, pargana Satsaika.	3,677 4 4	Do. ..	....	Choudhury Md. Amin and others.	..	440 4 2 March 1936— 285 10 6 June 1936— 154 9 8 440 4 2	..
5297	Rauthgram, pargana Satsaika.	2,121 15 8	Do. ..	....	Motowalli Fatema Khatoon.	..	312 5 8 March 1936— 222 11 2 June 1936— 89 10 6 312 5 8	..
5170	Dahukadanga, pargana Sahabad.	6,421 15 3	..	S. A. No. 1—2 as. 13 g. 1 k. 1 cr.	Indoomati Debi as guardian of minor Baidya Nath Rai.	1,070 5 4	..	425 12 2 March 1936— 283 14 2 June 1936— 141 14 0 425 12 2
				S. A. No. 2—1 a. 13 g. 1 k. 1 cr.	Chinmoyee Debi as trustee to the estate of Satendra Kumar Rai and others.	1,070 5 4	..	425 12 2 March 1936— 283 14 2 June 1936— 141 14 0 425 12 2
				S. A. No. 3—2 as. 13 g. 1 k. 1 cr. All other shares than that specified will be excluded from the sale.	Panchu Gopal Mukherjee.	1,070 5 4	..	455 3 4 March 1936— 313 5 4 June 1936— 141 14 0 455 3 4

This notice is issued in respect of instalments of revenue due on or before the 31st Jaistha, 1343 B.S., of which the latest date of payment was 29th June 1936 and also of revenue due on or before the 29th Falgoon, 1342 B.S., and 31st Jaistha, 1343 B.S., of which the latest date of payment was 28th March and 29th June 1936 in respect of Tauzi Nos. 6237, 101, 21-2, 24R., 24-2, 62-1, 116, 6238R., 6238-1, 65-1, 65-2, 65-6, 65-7, 72-3, 55-1, 159, 5296, 5297, 5170-1, 5170-2, 5170-3 and also of revenue due on or before the 30th Agrahayan, 29th Falgoon, 1342 B.S. and 31st Jaistha, 1343 B.S., of which the latest date of payment was 13th January, 28th March and 29th June 1936 in respect of Tauzi Nos. 20-5, 93, 62R., 62-5, 118 and 178.

Burdwan, the 21st August 1936.

J. B. NAG, *for* Collector.

Notification of Sale.

NOTICE is hereby given, under sections 6 and 13, Act XI of 1859, that the undermentioned estates and shares of estates in the district of Murshidabad will be put up for sale at the office of the Collector of that district on the 26th September 1936, at 12 noon, for arrears of revenue (and other demands which by law are realizable as arrears of land revenue).

When in columns 5, 7 and 9 of the following statement it is stated that only a share is to be sold, it is to be understood that a separate account is kept for that share :—

Tauzi No.	Name of mahal and pargana.	Sadar jama of whole estate.	Whether the whole estate is to be sold.	If only a share is to be sold, specification of such share or shares.	Names of proprietors of property to be sold.	If only a share is to be sold, the sadar jama of such share.	If the whole estate is to be sold, the arrears due from it.	If only a share is to be sold, the arrears due from it.
1	2	3	4	5	6	7	8	9
		Rs. a. p.				Rs. a. p.	Rs. a. p.	Rs. a. p.
5	Dihi Kutabpur, pargana Sherpur.	..	No ..	Residuary share—1a. 7g. 1c. 3 til.	Syed Abdul Ohid ..	610 12 2 Police— 4 14 5	..	443 0 2 Police— 2 8 5
				S. A. No. 3, share 1a. 4g. 3c. 16 til.	Syed Abu Asgar and others.	555 11 10 Police— 4 3 11	..	141 3 11 Police— 1 0 11
				S. A. No. 4, share 1a. 4g. 3c. 18 til.	Ditto ..	555 11 10 Police— 4 3 11	..	141 3 11 Police— 1 0 11
				S. A. No. 12, share 1a. 18g. 3c. 2kr. 9 til. All other shares besides that specified will be excluded from the sale.	Syed Md. Abdul Hafiz.	872 5 3 Police— 6 10 9	..	371 9 8 Police— 1 11 4
9	Kashipur, pargana Kashipur.	..	No ..	S. A. No. 5, share 1a. 18g. 2kr. 17 til. All other shares besides that specified will be excluded from the sale.	Satlesh Kumari Sing and others.	964 0 0	..	931 0 1
12	Kutabpur, pargana Kutabpur.	2,901 1 1	Whole	....	Maulvi Golam Gous and others, joint Matwali.	..	858 13 3	..
13	Kulberia, pargana Kulberia.	..	No ..	Residuary share—8 annas. All other shares besides that specified will be excluded from the the sale.	Nani Gopal Chakrabarti as sebait.	1,865 14 7	..	106 10 8
14	Ditto ..	631 14 4	Whole	....	Rasewari Chaudhurani as mother and guardian of her minor adopted son Sashanka Bhusan Choudhuri.	..	167 0 0	..
21	Ditto ..	..	No ..	S. A. No. 12, share 7a. 4g. 2c. 12 til. All other shares besides that specified will be excluded from the sale.	Tara Kinkor Chandra.	534 7 4	..	327 3 7
25	Kismut mauza Korlora, pargana Beharole.	..	No ..	Residuary share—12 annas. All others shares besides that specified will be excluded from the sale.	Tarangini Debi, executrix to the estate of Kedar Nath Bagchi and others.	890 14 3	..	960 6 3
52	Karya Benodbati, pargana Gaisabad.	500 0 0	Whole	....	Sudhakar Dhar and others.	..	37 8 0	..
55	Khargram, pargana Khargram.	..	No ..	S. A. No. 18, share 3a. 12g. 1c. 1kr. 5til. All other shares besides that specified will be excluded from the sale.	Mohadeb Roy Choudhury and others.	535 14 4	..	242 6 1
56	Ditto ..	..	No ..	Residuary share—4a. 3c. 10 til.	Dhanoda Prosad Roy Choudhury.	572 14 7	..	23 9 3
70	Dihi Gankar Charka, pargana Gankar.	..	No. ..	Residuary share—3as. 16g. 1c. 1kr.	Priya Gopal Dhar and others, sebaits.	3,484 2 0 Police— 63 1 10	..	3,088 4 6 Police— 63 1 3
				S. A. No. 1, share 3as. 16g. 2kr. 14 til.	Gobinda Das Nath as sebait.	3,482 15 0 Police— 63 0 2	..	3,022 8 0 Police— 63 0 2
				S. A. No. 2, share 3as. 16g. 2kr. 13 til.	Shyama Charan Nath as sebait.	3,482 15 0 Police— 63 0 3	..	3,011 2 1 Police— 31 8 3
				S. A. No. 3, share 3as. 16g. 2kr. 13 til.	Radha Ballav Nath as sebait.	3,482 15 0 Police— 63 0 2	..	3,011 2 1 Police— 31 8 1
				S. A. No. 4, share 15 gandas. All other shares besides that specified will be excluded from the sale.	Sarojini Bala Dasi as mother and guardian of Sailendra Kumar Boral and others.	685 8 8 Police— 12 6 5	..	305 8 8 Police— 9 4 9

Tauzi No.	Name of mahal and pargana.	Sadar jama of whole estate.	Whether the whole estate is to be sold.	If only a share is to be sold, specification of such share or shares.	Names of proprietors of property to be sold.	If only a share is to be sold, the sadar jama of such share.	If the whole estate is to be sold, the arrears due from it.	If only a share is to be sold, the arrears due from it.
1	2	3	4	5	6	7	8	9
		Rs. a. p.				Rs. a. p.	Rs. a. p.	Rs. a. p.
71	Dihi Gangedda, pargana Gankar.	..	No	S. A. No. 1, share 11as. 17g. 3c. 2 kr. 10 til. All other shares besides that specified will be excluded from the sale.	Krishna Gobinda Bhoumik as Common Manager.	1,948 4 0	..	97 13 9
72	Ditto ..	..	No	S. A. No. 2, share 6as. 9g. 2kr. 4 til. All other shares besides that specified will be excluded from the sale.	Naba Kumar Singha Dudhuria and another.	1,055 0 0 Police— 19 7 6	..	50 10 10 Police— 4 12 9
86	Gathia Harinathbati, pargana Dayanagar.	1,539 12 11	Whole	....	Mohini Mohan Sarkar as sebait.	..	70 6 5	..
91	Ganja Raipur, pargana Goas.	618 10 11	Do. ..	....	Hiatannessa Begum	..	43 10 11	..
113	Mauza Chamunda, pargana Muraripur.	756 5 8	Do. ..	....	Kali Charan Singha and others.	..	257 9 9	..
165	Taraf Telia Noapara, pargana Gankar.	2,659 2 11	Do. ..	....	Ditto ..	..	3,641 11 5	..
167	Pargana Dayanagar, pargana Dayanagar.	..	No ..	Residuary share, 12 annas. All other shares besides that specified will be excluded from the sale.	Haro Krishna Dhar and others.	7,193 1 6	..	5,761 2 1
172	Mauza Daspara, pargana Sahajadpur.	1,175 8 8	Whole	....	Pramatha Nath Basu Sarbadhikari and others.	..	481 8 11	..
254	Pargana Fatesing, pargana Fatesing.	..	No ..	S. A. No. 1, share 3 as. 4 g. S. A. No. 4, share 3 as. 4 g. All other shares besides that specified will be excluded from the sale.	Khitindra Narayan Roy and others. Anilabala Debi as executrix to the estate of Rajendra Narayan Roy.	9,269 2 8 9,269 2 6	.. ..	518 2 10 2,697 4 1
279	Mauza Basudevkhali, pargana Mahalandi.	..	No ..	S. A. No. 1, share 3 as. 5g 2c 5 til. All other shares besides that specified will be excluded from the sale.	Khagendra Behari Dutta and others.	547 11 0	..	165 9 7
307	Bajpara, pargana Chunakhali.	506 0 6	Whole	....	Maulvi Golam Gous and others as joint matwali.	..	13 13 9	..
323	Bagha Mitrapur, pargana Nowanagar.	663 9 6	Do. ..	....	Nitai Chandra Biswas as sebait.	..	228 10 2	..
327	Kismat Baintali, pargana Baintali.	2,561 1 1	Do. ..	....	Kali Charan Singha as sebait.	..	750 10 5	..
328	Ditto ..	2,316 8 9	Do. ..	....	Ditto ..	..	903 7 8	..
332	Huda Bhawanipur, pargana Akharshahi.	..	No ..	Residuary share, 6 as 8 g. All other shares besides that specified will be excluded from the sale.	Bhola Nath Bagchi as sebait.	1,085 11 0	..	1,164 5 6
340	Mandalshar Dihi, pargana Sherpur.	2,118 1 1 Police— 16 8 4	Whole	....	Mohini Mohan Sarkar as sebait.	..	550 15 2 Police— 3 3 3	..
342	Dihi Monalkandra, pargana Sherpur.	..	No ..	Residuary share, 2 as 13 g. 1 c. 1 kr. S. A. No 2, share 5 as. 6 g. 2 c. 2 kr. S A. No. 3, share 6 as. 6 g. 2 c. 2 kr. All other shares besides that specified will be excluded from sale.	Nabendu Narayan Roy Choudhury as sebait. Bishnupada Misra as sebait. Monojendra Narayan Roy Choudhury as sebait.	575 7 0 Police— 4 6 5 1,150 14 0 Police— 8 12 11 1,150 14 0 Police— 8 12 11	.. .. ..	413 14 6 Police— 2 3 3 611 7 7 Police— 2 3 4 876 10 10 Police— 4 6 7
345	Mohanpur Pargana Kismat, pargana Mohanpur.	4,390 11 0	Whole	....	Bholanath Bhattacharjee as Receiver to the estate of Ashit Mohan Ghose Moulik and other sebaits.	..	3,570 6 9	..

Tauzi No.	Name of mahal and pargana.	Sadar jama of whole estate.	Whether the whole estate is to be sold.	If only a share is to be sold, specification of such share or shares.	Names of proprietors of property to be sold.	If only a share is to be sold, the sadar jama of such share.	If the whole estate is to be sold, the arrears due from it.	If only a share is to be sold, the arrears due from it.
1	2	3	4	5	6	7	8	9
		Rs. a. p.				Rs. a. p.	Rs. a. p.	Rs. a. p.
346	Mohalandi Kismat Pargana, pargana Mohalandi.	..	No ..	S. A. No. 1, share 4 annas. All other shares besides that specified will be excluded from the sale.	Khagendra Behari Dutta and another.	612 14 3	..	211 13 3
353	Ditto	..	No ..	Residuary share—6 annas. All other shares besides that specified will be excluded from the sale.	Bibi Taheratannessa and others.	629 5 9	..	590 10 5
357	Madda Begombatti, pargana Uzirabad.	1,112 11 7	Whole	....	Mohini Mohan Sarkar as sebait.	..	495 14 2	..
364	Mouza Masumabad, pargana Masumabad.	1,230 1 1	Do. ..	....	Radha Ballav Nath and others.	..	759 5 1	..
397	Rasulpur, pargana Sherpur.	..	No ..	S. A. No. 2, share 5 as. 5 g.	Maulvi Khandkar Md. Abu Ahasan and others.	825 10 6	..	1,019 14 6
				S. A. No. 3 share 3 as. 15 g. All other shares besides that specified will be excluded from the sale.	Bibi Siddi Katonnessa and others.	589 12 1	..	764 0 0
436	Kismat pargana Shajahanpur, pargana Shajahanpur.	..	No ..	Residuary share 9 as. 12 g. All other shares besides that specified will be excluded from the sale.	Anilabala Debi and another.	2,089 15 10	..	764 10 2
456	Samaabad, pargana Behorole.	..	No ..	S. A. No. 2, share 5 as. 5 g.	Khandakar Md. Abu Ahasan and others.	2,029 2 2	..	2,525 9 4
				S. A. No. 3, share 3 as. 15 g.	Bibi Sidde Katonnessa and others.	1,449 6 1	..	2,068 9 5
				S. A. No. 5, share 1 a. 11 g. 2 c. 2 kr. All other shares besides that specified will be excluded from the sale.	Bibi Hafizatonnessa Ummatal Fatema Choudhurani.	611 15 5	..	211 4 3
490	Hatinagar, pargana Samaskhali.	..	No ..	Residuary share 12 annas. All other shares besides that specified will be excluded from the sale.	Maulvi Golam Gous and others as joint Matwali.	1,470 14 3	..	136 12 9
495	Mouza Harishpur, pargana Kulberia.	520 0 0	Whole	....	Nirode Mohan Ghose Moulik and others.	..	49 1 1	..
508	Dihi Atal, pargana Sherpur.	..	No ..	Residuary share 8 annas.	Nilabja Prova Debi as grandmother and guardian of Kironbala Singha, mother and guardian of Amrita Gopal Singha and another, minors.	1,726 5 0 Police— 13 3 4	..	1,168 9 9 Police— 6 9 7
				S. A. No. 4, share 3 as. 6 g. 2 c. 2 kr. All other shares besides that specified will be excluded from the sale.	Sailesh Kumari Singha and others, sebaits.	710 4 9 Police— 5 8 1	..	266 13 10 Police— 1 6 1
510	Atghari, pargana Behorole.	1,013 11 9	Whole	....	Amulyalata Dasi and another.	..	412 5 2	..
515	Augram, pargana Shahajadpur.	884 13 0	Do. ..	....	Girija Sankar Chakraverty and another.	..	169 13 4	..
516	Munia Dihi, pargana Talisring.	..	No ..	Residuary share 8 annas.	Subodh Krishna Ghose Moulik and others.	3,229 1 1	..	1,398 [illegible] 1
				S. A. No. 1, share 8 annas. All other shares besides that specified will be excluded from the sale.	Saroje Krishna Ghose Maulik.	3,229 1 [illegible]	..	947 15 11[illegible]
521	Taraf Anupnagar, Pargana Rajshahi.	..	No ..	Residuary share, 7 as. 17 g. 3 c. 1 kr. 10 til. All other shares besides that specified will be excluded from the sale.	Nani Gopal Chakravarti and others.	858 9 3	..	21 2 2

Tauzi No.	Name of mahal pargana.	Sadar jama of whole estate.	Whether the whole estate is to be sold.	If only a share is to be sold, specification of such share or shares.	Names of proprietors of property to be sold.	If only a share is to be sold, the sadar jama of such share.	If the whole estate is to be sold, the arrears due from it.	If only a share is to be sold, the arrears due from it.
	2	3	4	5	6	7	8	9
		Rs. a. p.				Rs. a. p.	Rs. a. p.	Rs. a. p.
593	Taraf Jiaganj, pargana Asadnagar.	1,281 3 8	Whole	....	Nabakumar Singh Dudhuria and another.	..	224 4 8	..
596	Dewnapur, Noanagar, pargana Dewnapur.	..	No. ..	S. A. No. 2, share 8 annas. All other shares besides that specified will be excluded from the sale.	Hirendra Nath Roy and another.	649 5 6	..	162 0 0
597	Nialishpara, pargana Mozafarpur.	1,151 8 0	Whole	....	Suresh Chandra Sen and another.	..	156 0 0	..
2738	Taraf Bhalkundi, pargana Asadnagar.	1,873 6 11	Do. ..	....	Moharaj Bahadur Sing.	..	127 13 3	..
2745	Taraf Sundalpur, pargana Asadnagar.	528 11 6	Do. ..	....	Sisir Kumar Banerjee	..	218 11 6	..
2778	Taraf Nur Mohammadpur, pargana Asadnagar.	1,257 14 8	Do. ..	....	Maulvi Golam Gous and others as joint Matwali.	..	857 14 8	..
2779	Taraf Kanaipara, pargana Asadnagar.	1,185 13 1	Do. ..	....	Kharani Kumar Ghose and others.	..	86 9 4	..
2785	Taraf Hajiganj, pargana Asadnagar.	662 15 3	Do. ..	....	Lakshmi Narayan Sen and another as joint Receiver, Dangapara estate.	..	415 7 3	..
3250	Jote Kashi, pargana Denya.	599 13 8	Do. ..	....	Munshi Zillar Rahaman.	..	76 4 0	..
584 P. II	Deara Sibnagar, pargana Laskharpur.	2,054 0 0	Do. ..	....	Naresh Narayan Roy and others.	..	12 10 6	..
1482 P. II	Madhupur in char Garibpur, pargana Kulberia.	551 0 0	Do. ..	....	Kali Prosanna Roy Chaudhury and others	..	6 10 0	..
2758 P. II.	Char Mirzapur, pargana Plassey.	3,720 0 0	Do. ..	....	Pria Nath Ganguly	..	930 0 0	..

This notice is issued in respect of instalments of revenue which were due on or before the 31st Jaista, 1343 B. S., of which the latest date of payment was 28th June 1936 A. D.

A. HOSSAIN, *for* Collector.

Berhampore, the 22nd August 1936.

Notification.

NOTICE is hereby given, under sections 6 and 13 of Act XI of 1859, that the undermentioned estates and shares of estates in the district of 24-Parganas will be put up for sale at the office of the Collector of that district on the 21st September 1936, at 12 noon, for arrears of revenue and other demands which by law are realisable as arrears of land revenue.

When in columns 5, 7 and 9 of the following statement it is stated that only a share is to be sold, it is to be understood that a separate account is kept for that share and all other shares besides that specified will be excluded from the sale:—

Tauzi No.	Name of mahal and pargana.	Sadar jama of the whole estate.	Whether the whole estate is to be sold.	If only a share is to be sold, specification of such share or shares.	Names of proprietors of properties to be sold.	If only a share is to be sold, Sadar jama of such share.	If the whole estate is to be sold, the arrears due from it.	If only a share is to be sold, the arrears due from it.
1	2	3	4	5	6	7	8	9
		Rs. a. p.				Rs. a. p.	Rs. a. p.	Rs. a. p.
1 R.S.	Mahal Chetla, pargana Magura.	..	..	14 gds. 2 kg. 16 til in mauza Chetla. 17 gds. 2 k. 1 til 2 k. 2kt. in mauza Taraf Satgachia. 18 gds. 3 k. 2 kg. 6 til in mauza Tangtola. 7 gds. 2 k. 34 bighas and 16 cottas specified land for sl. Nos. 21 and 22 in mauza Barisha. 14 gds. 2 k. 1 kg. 9 til 2 kg. 4 til 3 k. in mauza Hatiagarh. 9 as. 12 gds. in mauzas Sibarampur and Narayanpur. 8 annas in mauzas Nurshikdar and Joyanpur. 5 as. 6 gds. 2 k. 2 kg. 13 til 1 k. 1 kt. in mauzas Sripur and Bagerghole. 4 annas in mauza Chakraju Molla. 10 as. 19 gds. 3 k. 3 kg. 9 til 3 k. 1 kt. in mauza Boinchberia.	Joygopal Das and others.	2,075 15 11	..	361 15 6½
1/10	Ditto ..	..	..	3 k. 2 kg. 8 til in mauza Taraf Chetla. 1 gd. 1 kg. 16 til in mauza Taraf Satgachia and Tongtola. 1 gd. 2 k. in mauza Barisha. 2 gds. 3 kg. 5 til 2 k. 1kg. 2 til 2 k. 2 kt. in mauza Hatiagarh. 3as. 4gds. in mauzas Bishnupur and Narayanpur. 8 annas in mauzas Nurshikdar and Joyanpur. 8 as. 13 gds. 1 k. 6 til 1 k. 1 kt. in mauzas Sripur and Bagerghole.	Ramgopal Das and others.	808 7 1	..	140 9 11
47/1	Mahal Raipur, pargana Magura.	..	..	16 annas share in mauzas Gangadhar Chak and Brojomari Chak and others.	Khagendra Nath Chakrabarty and others.	1,642 9 2	..	98 8 0
63 ..	Mahal Bansdroni, pargana Magura.	9,058 4 2	Whole ..	....	Satyendra Kumar Sarkar and others.	..	589 12 10½	..
64/1	Ditto ..	..	..	5as. 6gds. 2c. 2kt. share in each of mauzas in No. 17 Durgapur, 18 Shalpukuria and others. 1a. 13gds. 1 c. 1kt. in each of the mauzas Chak Andharmanik, Chak Gangadhar and others.	Bhupati Lal Banerjee and others.	792 1 3	..	62 8 1
64/1/1	Ditto ..	..	..	5as. 6gds. 2c. 2kt. share in each of mauzas in No. 17 Durgapur, 18 Shalpukuria and others. 1 a. 13gds. 1 c. 1 kt. in each of the mauzas Chak Andharmanik, Chak Gangadhar and others.	Golam Rahman Molla and others.	792 1 11	..	102 15 3
145	Mahal Madrasa Boubooghly, pargana Calcutta.	5,193 14 0	Whole ..	....	Sm. Nanibala Dasi and others.	..	84 15 8½	..
146 R.S.	Mahal Jojra, pargana Anwarpur.	..	..	16 annas share in 185 mauzas.	Dharani Mohan Rai.	26,207 0 2	..	7,283 4 11
147 R.S.	Mahal Benota, pargana Calcutta.	..	..	8 annas share in 53 mauzas.	Bhupati Rai Chowdhury.	914 5 11	..	194 4 ?
165	Mahal Rajarampur, pargana Hatiagarh.	599 10 4	Whole ..	....	Hrishikesh Banerjee.	..	91 2 11½	..

Tauzi No.	Name of mahal and pargana.	Sadar Jama of the whole estate.	Whether the whole estate is to be sold.	If only a share is to be sold, specification of such share or shares.	Names of proprietors of properties to be sold.	If only a share is to be sold, the Sadar jama of such share.	If the whole estate is to be sold, the arrears due from it.	If only a share is to be sold, the arrears due from it.
1	2	3	4	5	6	7	8	9
		Rs. a. p.				Rs. a. p.	Rs. a. p.	Rs. a. p.
172R.S.	Mahal Gauripur, pargana Calcutta.	..	..	2 as. 8 gds. share in all mauzas except Babanpur and Kataria.	Bhola Nath Banerjee and others.	1,333 14 1	..	505 14 8½
172/4	Ditto ..	..	..	2 as. 2 gds. 2 k. 2 kt. share in all mauzas except Babanpur and Kataria.	Jiban Krishna Rai Chaudhury, trustee.	1,282 12 11	..	2,230 9 10
173R.S.	Mahal Uriapara, pargana Calcutta.	..	..	2 as. 8 gds. ..	Bhola Nath Banerjee and others.	2,197 5 9	..	1,390 5 4
*250/10	Mahal Barulpore, parganas Medanmolla and Khaspur.	..	..	17gds. 2kt. 2dt. ..	Sm. Bijoli Bala Dasi and others.	2,808 7 9	..	2,110 13 1
263	Mahal Ghoshpur, pargana Medanmolla.	2,000 2 11	Whole..	....	Mahim Ch. Chatterjee and others.	..	195 5 10	..
271	Mahal Sitakundu, pargana Medanmolla.	3,083 0 0	Do. ..	....	Mahendra Nath Banerjee.	..	257 2 6½	..
311	Mahal Ektara, pargana Muragacha.	2,670 0 9	Do. ..	....	Manujendra Krishna Mittra and another.	..	318 10 1	..
312	Mahal Belsingha, pargana Muragacha.	8,701 8 10	Do. ..	....	Abani Nath Mukherjee.	..	680 0 8½	..
*826 R.S.	Mahal Bishnupur, pargana Muragacha.	..	..	8 annas ..	Rai Harendra Nath Chaudhuri and another.	1,199 3 8½	..	649 2 1
341	Mahal Raipur, pargana Ghar.	6,677 14 0	Whole..	....	Atindra Nath Das and others.	..	1,138 8 5	..
351	Mahal Porni, pargana Balia.	8,626 8 6	Do. ..	....	Sourindra Nath Roy.	..	504 3 7	..
352 R.S.	Mahal Naya Hazari, pargana Balia.	..	..	3as. 11gds. 1kt. 1dt. ..	Sailendra Nath Das and another.	1,189 0 0	..	82 14 6
352/1	Ditto ..	..	..	5as. 6gds. 2k. 2kt. ..	Sm. Binapani Dassi.	1,784 1 1	..	124 5 7
352/3	Ditto ..	..	..	1a. 15gds. 2k. 2dt. ..	Sailendra Nath Das and another.	594 11 0	..	41 7 2
353 R.S.	Mahal Nandanpur, pargana Balia.	..	..	8 annas ..	Jugal Charan Mandal and others.	1,599 9 1	..	87 8 3
355	Mahal Raipur, pargana Balia.	2,745 6 0	Whole..	....	Bhola Nath Mondal	..	692 0 2½	..
373	Mahal Mathurapur, pargana Hatiagarh.	16,875 2 7	Do. ..	....	Dharani Mohan Ray.	..	6,490 15 3	..
392 R.S.	Mahal Huda Joychandipur, pargana Azimabad.	..	..	1a. 6gds. 2k. 2kt. ..	Panchanan Mandal	692 10 1	..	49 10 6½
392/4	Ditto ..	..	..	1a. 6gds. 2k. 2kt. ..	Sarat Chandra Mondal.	692 10 3	..	49 11 4
394	Mahal Kishorepur, pargana Azimabad.	7,108 12 11	Whole..	....	Bhola Nath Mondal.	..	2,182 5 11	..
395 R.S.	Mahal Mohammadpur, pargana Azimabad.	..	..	3 annas ..	Hemendra Krishna Sinha and others.	2,730 9 11	..	714 3 3
400	Mahal Ramchandrapur, pargana Balia.	747 1 0	Whole..	....	Naba Kishore Mandal, sebait.	..	47 14 8	..
403 R.S.	Mahal Patharberia, pargana Azimabad.	..	..	4as. 12gds. 1k. 2kt. 1dt.	Kumud Krishna Mondal and others.	1,485 12 8½	..	95 6 10½
403/2	Ditto ..	..	..	6as. 13gds. 1k. 1kt. ..	Sm. Anilabala Dasi and others.	2,142 15 11	..	1,747 5 5
603/1	Mahal Balia, pargana Balia.	..	..	3 annas ..	Narendra Chandra Bose.	3,281 0 7	..	593 2 4
603/6	Ditto ..	..	..	2as. 10gds. ..	Sm. Renu Debi ..	2,734 3 6	..	1,831 12 4
603/7	Ditto ..	..	..	2as. 10gds. ..	Narendra Chandra Bose.	2,734 3 10	..	527 12 0
613	Mahal Kathuriya, pargana Balia.	855 13 0	Whole..	....	Sm. Sailabasini Debi and others.	..	73 9 7	..
648	Mahal Palkan, pargana Amirabad.	560 8 0	Do. ..	....	Narendra Chandra Bose.	..	84 6 6	..
1515	Mahal Srinagar, pargana Medanmolla.	2,109 12 0	Do. ..	....	Jadu Nath Banerjee.	..	346 15 2½	..
2049/1	Mahal Katiara, pargana Ukhra.	..	..	8 annas ..	Kali Das Nandy and others.	2,143 8 2½	..	78 0 3

Tauzi No.	Name of mahal and pargana.	Sadar jama of the whole estate.	Whether the whole estate is to be sold.	If only a share is to be sold, specification of such share or shares.	Names of proprietors of properties to be sold.	If only a share is to be sold, the Sadar jama of such share.	If the whole estate is to be sold, the arrears due from it.	If only a share is to be sold, the arrears due from it.
1	2	3	4	5	6	7	8	9
		Rs. a. p.				Rs. a. p.	Rs. a. p.	Rs. a. p.
2068 R. S.	Mahal Goaldob, pargana Ukhra.	..	..	8as. 16gds. 1k. ..	Surendra Nath Mazumdar and others.	1,355 3 2	..	29 10 10
2071	Mahal Hatighata, pargana Ukhra.	620 4 8	Whole ..	....	Sm. Saralabala Debi.	..	33 4 8	..
*596	Mahal Ranaghat, pargana Hatiaghar.	1,503 0 0	Do. ..	....	Sailendra Nath Mitra and others.	..	303 0 0	..
*1370 R. S.	Mahal Lot No. 101, Mahmudpur Abad, pargana Sunderban.	..	..	4 annas ..	Ramchandra Guha Burman and others.	1,379 0 0	..	828 0 0
*1370/1	Ditto ..	..	..	12 annas ..	Ahidhar Ghosh ..	4,137 0 0	..	2,895 0 0
*1382	Mahal Lot No. 72, 1st portion, pargana Sunderban.	5,316 0 0	Whole ..	....	Tarapada Ghosh	..	3,987 0 0	..
*1406	Mahal Lot No. 72, pargana Sunderban.	565 0 0	Do. ..	....	Ditto ..	..	423 11 0	..
1441 R.S.	Mahal Lot Nos. 30, 32 and 33, pargana Sunderban.	..	..	2as. 16gds. 2k. 9 til	Surendra Narain Dutt and others.	2,419 2 10	..	637 2 5½
1441/9	Ditto ..	..	..	1a. 14gds. 3k. 1kt. 17til	Birendra Narain Dutta.	1,493 7 10	..	489 7 4
*1441/10	Ditto ..	..	..	1a. 4gds. 2k. 1kt. ..	Pankaj Kumar Dutt and others.	1,051 13 9	..	409 12 7
*1441/11	Ditto ..	..	..	3 annas ..	Khirode Gopal Mitter.	2,567 4 0	..	561 8 8
*1441/12	Ditto ..	..	..	18gds. 2kt. 17til ..	Jatindra Narain Dutt.	780 4 3	..	255 5 2
*1441/13	Ditto ..	..	..	1a. 14gds. 3k. 1kt. 17til.	Nripendra Narain Dutt.	1,493 6 3	..	489 6 5
1442 R.S.	Mahal Abadkari Lot No. 22, pargana Sunderban.	..	..	3as. 8gds. 2k. 16til ..	Radhika Prosad Dutt and others.	1,406 12 4	..	214 10 6
1457/1	Mahal Lot No. 90, pargana Sunderban.	..	..	5as. 5gds. ..	Amal Kumar Ray Choudhury and others.	1,967 12 3	..	122 9 9
1486	Mahal Lot No. 64, pargana Sunderban.	935 0 0	Whole ..	....	Atul Kumar Ray Choudhury and others.	..	892 12 0	..
*1487 R.S.	Ditto ..	..	..	12as. 10gds. ..	Jitendra Nath Roy Choudhury and others.	796 14 0	..	199 3 6
*2721 R.S.	Mahal north-western part of Lot No. 16, pargana Sunderban.	..	..	8 annas ..	Manindra Nath Chakrabarty and others.	1,838 8 0	..	580 8 0
2721/1	Ditto ..	..	..	8 annas ..	Annada Prosad Mittra.	1,838 8 0	..	995 0 0
*2731	Mahal western part of Lot No. 138, pargana Sunderban.	4,253 0 0	Whole ..	....	Susil Kumar Ray Choudhury.	..	1,750 0 0	..
2832	Mahal third portion of Lot No. 9, pargana Sunderban.	4,244 0 0	Do. ..	....	Jatindra Nath Kundu and others.	..	1,393 0 0	..
2839	Mahal Lot No. 163, 3rd portion, pargana Sunderban.	5,267 0 0	Do. ..	....	Satish Chandra Chakravarty and others.	..	247 2 0	..
2840	Mahal Lot No. 163, 4th portion, pargana Sunderban.	3,894 0 0	Do. ..	....	Ditto ..	..	181 14 0	..
2841	Mahal Lot No. 16, 4th portion, pargana Sunderban.	3,055 0 0	Do. ..	....	Prionath Raj Mondal and others.	..	468 8 0	..
*2843	Mahal Lot No. 16, 3rd portion, pargana Sunderban.	3,438 0 0	Do. ..	....	Sadan Kumar Bose and others.	..	111 11 2	..
2845	Mahal Lot No. 135, 3rd portion, pargana Sunderban.	5,468 0 0	Do. ..	....	Sarat Chandra Bhowmik and another.	..	403 0 0	..

Tauzi No.	Name of mahal and pargana.	Sadar jama of the whole estate.	Whether the whole estate is to be sold.	If only a share is to be sold, specification of such share or shares.	Names of proprietors of properties to be sold.	If only a share is to be sold, the Sadar jama of such share.	If the whole estate is to be sold, the arrears due from it.	If only a share is to be sold, the arrears due from it.
	2	3	4	5	6	7	8	9
		Rs. a. p.				Rs. a. p.	Rs. a. p.	Rs. a. p.
*2853	Mahal Lot No. 128, 1st portion of the south portion, pargana Sunderban.	3,348 0 0	Whole	....	Rai Dwarika Nath Chakrabarty Bahadur.	..	457 0 0	..
2854	Mahal Lot No. 111, 10th portion, pargana Sunderban.	4,217 0 0	Do. ..	....	Harimohan Rai and another.	..	667 0 0	..
2857	Mahal Lot No. 114, 7th portion, pargana Sunderban.	2,599 0 0	Do. ..	....	Bhola Nath Giri and others.	..	243 12 0	..
*2861	Mahal Lot No. 114, 1st portion, pargana Sunderban.	3,058 0 0	Do. ..	....	Jadu Nath Banerjee and others.	..	404 0 0	..
2864	Mahal Lot No. 114, 2nd portion, pargana Sunderban.	3,497 0 0	Do. ..	....	Mohendra Nath Nanda and others.	..	258 12 0	..
2865	Mahal Lot No. 114, 8th portion, pargana Sunderban.	3,777 0 0	Do. ..	....	Shyama Charan Nanda and others.	..	67 5 8	..
2866	Mahal Lot No. 114, 9th portion, pargana Sunderban.	3,515 0 0	Do. ..	....	Sailaja Charan Nanda and others.	..	74 7 1	..
2868	Mahal Lot No. 114, 4th portion, pargana Sunderban.	2,174 0 0	Do. ..	....	Bama Charan Das and others.	..	249 0 0	..
2872	Mahal Lot No. 139, 2nd portion, pargana Sunderban.	1,485 0 0	Do. ..	..	Surendra Nath Mazumdar and others.	..	279 0 0	..
2897	Mahal I plot, 2nd portion, pargana Sunderban.	1,373 0 0	Do. ..	....	Ram Gopal Das Naskar and others.	..	188 5 4	..
2898	Mahal I plot, 1st portion, pargana Sunderban.	979 0 0	Do. ..	....	Ram Gopal Das and others.	..	98 0 0	..
2906	Mahal Lot No. 122, 2nd portion, pargana Sunderban.	783 0 0	Do. ..	....	Chandi Charan Laha.	..	157 0 0	..
2925	Mahal E plot, 1st portion, pargana Sunderban.	1,094 0 0	Do. ..	....	Bhupendra Nath Jana and others.	..	219 0 0	..
2932	Mahal Sagore Island Lot described as Tower land, 2nd portion, pargana Sunderban.	4,050 0 0	Do. ..	....	Sagar Chandra Das.	..	253 0 0	..
2946	Mahal Lot No. 140, 2nd portion, pargana Sunderban.	1,103 0 0	Do. ..	....	Sm. Mrinalini Palit and another, sebait.	..	221 0 0	..
2953	Mahal G plot, 2nd portion, pargana Sunderban.	1,334 0 0	Do. ..	....	Debendra Narayan Hazra and others.	..	267 0 0	..
2954	Mahal C plot, 2nd portion, pargana Sunderban.	1,035 0 0	Do. ..	....	Sudhir Chandra Jana and others.	..	207 0 0	..
2973	Mahal G plot, 4th portion, pargana Sunderban.	898 0 0	Do. ..	....	Sudhir Chandra Sarkar and others.	..	448 0 0	..
2977	Mahal Lot No. 117, 2nd portion, pargana Sunderban.	943 0 0	Do. ..	....	Chandi Charan Laha.	..	188 0 0	..
2987	Mahal Lot No. 150, 1st portion, pargana Sunderban.	939 0 0	Do. ..	....	Shib Chandra Ghosh and others.	..	188 0 0	..
2989	Mahal Lot No. 119, 4th portion, pargana Sunderban.	1,234 0 0	Do. ..	....	Nirmal Chandra Mondal and others.	..	587 0 0	..
2993	Mahal Lot No. 162, 1st portion, pargana Sunderban.	1,285 0 0	Do. ..	....	Sm. Biswesawari Debi.	..	257 0 0	..
3026	Mahal 3rd portion of Chak Mausadwip, pargana Sunderban.	2,046 8 0	Do. ..	....	Bon Behari Jana and another.	..	409 3 0	..
*3195	Mahal Chota Sahebkhali, pargana Sunderban.	1,112 0 0	Do. ..	....	Tarapada Ghosh	..	834 0 0	..

The estates excepting those marked with asterisk are being advertised for sale for instalments of revenue which were due on or before the 31st of Jaista, 1343 B.S., and of which the latest day of payment was the 28th June 1936.

The estates marked with asterisk are being advertised for sale for instalments of revenue which were due on or before the 29th of Falgoon, 1342 B. S., and of which the latest day of pament was the 28th March 1936.

Alipore, the 26th August 1936. [ILLEGIBLE], *For* Collector.

Notification A.

NOTICE is hereby given, under sections 6 and 13, Act XI of 1859, that the undermentioned estates and shares of estates in the district of Dinajpur will be put up for sale at the office of the Collector of that district on the 25th September 1936, at 12 noon, for arrears of revenue and other demands which by law are realizable as arrears of land revenue.

When in columns 5, 7 and 9 of the following statement it is stated that only a share is to be sold, it is to be understood that a separate account is kept for that share :—

Tauzi No.	Name of mahal and pargana.	Sadar jama of whole estate.	Whether the whole estate is to be sold.	If only a share is to be sold, specification of such share or shares.	Names of proprietors of property to be sold.	If only a share is to be sold, the sadar jama of such share.	If the whole estate is to be sold, the arrears due from it.	If only a share is to be sold, the arrears due from it.
1	2	3	4	5	6	7	8	9
		Rs. a. p.				Rs. a. p.	Rs. a. p.	Rs. a. p.
32	Mahal Jaypur, pargana Deora.	1,475 9 11	No ..	12 annas, S.A. No. 1 All other shares besides that noted will be excluded from the sale.	Priyanath Maitra	1,106 11 6	..	79 11 6
49	Mahal Saidpur, pargana Gilahabar.	2,176 10 1	Yes ..	....	Bibi Isamon Nessa Chowdhurani.	..	226 10 1	..
59	Mahal Uriapara, pargana Rajnagar.	4,625 4 11	Yes ..	....	Azizar Rahman, guardian on behalf of minor Motwali Rahamtulla Chowdhury.	..	336 4 11	..
82	Mahal Madhupur, pargana Mahasa.	1,131 9 9	Yes ..	....	Satyendra Nath Majumdar, Jagadindra Nath Majumdar and others.	..	118 9 1	..
115	Mahal Sahabajpur, pargana Santosh.	6,033 12 6	No ..	8annas residuary share All other shares besides that noted will be excluded from the sale.	Debesh Chandra Mukherjee.	3,016 14 8	..	309 12 8
127	Mahal Pukhari, pargana Gilahabari.	1,696 12 8	Yes ..	....	Late proprietor Rajkumari Tripuraswari, Sailendra Nath Roy and others, present proprietor by auction purchase Jamiruddin Chowdhury.	..	254 12 8	..
133	Mahal Palashi, pargana Gilahabari.	1,696 12 7	Shares noted in column 5 will be put up to sale together.	8 annas residuary share.	Mukunda Chandra Dutta Chowdhury and others.	848 6 3	..	127 6 3
				6annas, S.A. No. 1 ..	Mafizuddin Chowdhury.	636 4 9	..	96 4 9
				2annas, S.A. No. 2 ..	Munshi Amir Hossain Talukdar and others.	212 1 7	..	32 1 7
136	Mahal Charkai, pargana Sarbatta.	1,702 0 10	Yes ..	....	Maharaj Bahadur Singh.	..	173 0 9	..
143	Mahal Panchanan, pargana Debikote.	1,947 10 0	Yes ..	....	Panchanan Nandi Chowdhury.	..	199 10 0	..
145	Mahal Binaykuri, pargana Deora.	4,761 0 10	Shares noted in column 5 will be put up to sale together.	12 annas, residuary share.	Sidheswar Dey Chowdhury and others.	3,570 12 8	..	331 8 8
				4 annas, S.A. No. 1 ..	Sidheswar Dey Chowdhury and another.	1,190 4 2	..	110 8 1
161	Mahal Ramdebpur, pargana Fulbari.	3,187 10 0	Yes ..	....	Jyotish Chandra Guha and others.	..	332 1 0	..
162	Mahal Gokul, pargana Gilahabari.	2,893 2 6	No ..	6as. 6g. 2c. 2kt., residuary share. All other shares besides that noted will be excluded from the sale.	Biman Chandra Dutta Munshi and another.	1,145 3 3	..	99 11 5
169	Mahal Gachhatta, pargana Bajitpur.	7,156 8 0	No ..	2 as. 13 g. 1 c. 1 kt., S.A. No. 2.	Gopendra Narayan Roy.	1,192 9 4	..	124 1 4
				5 as. 6 g. 2 c. 2 kt., S.A. No. 3.	Surendra Narayan Chowdhury.	2,385 2 8	..	248 2 8
				1 a. 6 g. 2 c. 2 kt., S.A. No. 6.	Gopendra Narayan Roy.	596 4 8	..	62 1 2
				All other shares besides that noted will be excluded from the sale.				

Tauzi No.	Name of mahal and pargana.	Sadar jama of whole estate.	Whether the whole estate is to be sold.	If only a share is to be sold, specification of such share or shares.	Names of proprietors of property to be sold.	If only a share is to be sold, the sadar jama of such share.	If the whole estate is to be sold, the arrears due from it.	If only a share is to be sold, the arrears due from it.
1	2	3	4	5	6	7	8	9
		Rs. a. p.				Rs. a. p.	Rs. a. p.	Rs. a. p.
170	Mahal Mahattore, pargana Bajitpur.	1,870 12 0	No ..	6 as. 6 g. 2 c. residuary share. All other shares besides that noted will be excluded from the sale.	Surendra Narayan Chowdhury.	743 1 5	..	76 1 4
172	Mahal Bhandardaha, pargana Dehatta.	2,392 6 5	Yes ..	....	Kshirode Kanta Sen, pleader, receiver on behalf of Motwali Md. Yusuf Chowdhury.	..	270 4 10	..
173	Mahal Mahammad Yusuf, pargana Dehatta.	902 1 0	Yes ..	...	Late proprietor Kshirode Kanta Sen, pleader, receiver on behalf of Motwali Md. Yusuf Chowdhury, present proprietor Mahatabuddin Chowdhury.	..	63 1 0	..
181	Mahal Galahar, pargana Deora.	1,612 13 0	Shares noted in column 5 will be put up to sale together.	6 as. 8 p., residuary share. 5 as. 4 p., S. A. No. 2. 4 annas, S. A. No. 3.	Umesh Chandra Das Deb Barma. Chandra Sekhar Das Deb Barma and others. Umesh Chandra Das Deb Barma.	672 0 1 537 9 8 403 3 3	.. .. ..	59 15 0 49 9 7 36 3 3
197	Mahal Malancha, pargana Gilahabari.	3,349 7 3	Yes	....	Mohini Mohan Banerjee and others.	..	451 7 3	..
206	Mahal Kulhari, pargana Sashbir.	4,590 9 8	No ..	4 as. 5 g. 1 c. 1 kt., S. A. No. 2. All other shares besides that noted will be excluded from the sale.	Bishnupada Chowdhury and another.	1,224 2 7	..	125 12 2
209	Mahal Karal, pargana Gilahabari.	3,244 1 5	No ..	10 as. 13 g. 1 c. 1 kt., residuary share. All other shares besides that noted will be excluded from the sale.	Mahammad Ekramuddin Chowdhury and others.	2,162 [illegible] 7	..	211 11 5
216	Mahal Gobindapur, pargana Panjra.	4,083 12 3	No. ..	8 annas S. A. No. 1. All other shares besides that noted will be excluded from the sale.	Kshirode Behary Saha and others.	2,041 14 2	..	145 14 1
237	Mahal Daulatpur, pargana Rajnagar.	4,660 8 1	Yes ..	....	Azizar Rahma, guardian on behalf of minor Motwali Rahmtulla Chowdhury.	..	344 8 1	.
238	Mahal Sultanpur, pargana Sultanpur.	1,718 4 10	No .	14 as. 10 g. 3 c. 1 kt. 10 til residuary share. All other shares besides that noted will be excluded from the sale.	Raikumari Tripureswari and others.	1,610 3 10	..	139 9 8
252	Mahal Ujirpur, pargana Gilahabari.	854 0 0	Yes ..	...	Naba Kumar Sinha Dudhuria and another.	..	87 0 0	..
256	Mahal Sindurhata, pargana Gilahabari	4,281 5 3	Yes ..	....	Kumar Sarat Kumar Roy.	..	434 5 3	..
266	Mahal Hazipur, pargana Lalbarikhalisa.	1,559 13 5	No .	12 as. 7 g. 2 c., residuary share. All other shares besides that noted will be excluded from the sale.	Sinh Md. Khalilluddin Haider Abu Jabbar and others	1,206 7 0	..	70 0 0

Tauzi No.	Name of mahal and pargana.	Sadar jama of whole estate.	Whether the whole estate is to be sold.	If only a share is to be sold, specification of such share or shares.	Names of proprietors of property to be sold.	If only a share is to be sold, the sadar jama of such share.	If the whole estate is to be sold, the arrears due from it.	If only a share is to be sold, the arrears due from it.
1	2	3	4	5	6	7	8	9
		Rs. a. p.				Rs. a. p.	Rs. a. p.	Rs. a. p.
271	Mahal Raysali, pargana Kharail.	4,649 11 8	No ..	6 annas, S. A. No. 1	Chandra Nath Chatterjee and another.	1,743 10 5	..	182 10 5
				2 as. 10 g., S. A. No. 3	Jagadish Nath Bhattacharyya.	726 8 4	..	76 5 10
				All other shares besides that noted will be excluded from the sale.				
278	Mahal Debnathpur, pargana Deora.	3,275 10 0	No ..	7 as. 13 g. 2 c., residuary share.	Prafulla Mayee Debi and others.	1,570 7 1	..	180 7 1
				1 a. 3 g. 2 kt. 3 job, S. A. No. 2.	Pratap Chandra Khasnabis.	237 6 9	..	20 6 9
				1a. 16g. 3 c. 1 job, S.A. No. 6.	Chuna Muhammad Shah and others.	376 4 9	..	31 4 9
				All other shares besides that noted will be excluded from the sale.				
310	Mahal Rajibpur, pargana Panjra.	884 11 8	Yes .	....	Nilabja Prova Debi and Kiron Bala Sinha as guardian on behalf of Amrita Gopal Sinha and Raghu Nandan Sinha.	..	54 11 8	..
345	Mahal Raghabendrapur, pargana Fulbari.	3,079 15 0	No ..	12 annas residuary share.	Manindra Chandra Bakshi and others.	2,310 0 7	..	239 3 9
				2 annas, S. A. No. 7	Debiranjan Pathak and others.	384 15 11	..	39 15 11
				15 gandas, S. A. No. 8	Surath Lal Chowdhury.	144 5 6	..	14 15 4
				15 gandas, S. A. No. 9	Biraj Mohini Chowdhurani.	144 5 7	..	14 9 6
				All other shares besides that noted will be excluded from the sale.				
372	Mahal Janaklnath, pargana Nurpur.	500 2 9	Yes ..	....	Satyendra Nath Majumdar and another.	..	32 2 9	..
377	Mahal Punatti, pargana Nurpur.	908 15 9	Shares noted in column 5 will be put up to sale together.	8 annas residuary share.	Asutosh Guha and others.	454 7 10	..	47 7 10
				8 annas, S. A. No. 1	Harish Chandra Das Deb Barman, sebait.	454 7 11	..	47 7 11
390	Mahal Subarnakhali, pargana Panjra.	2,614 6 6	Shares noted in column 5 will be put up to sale together.	4 annas (Group), S. A. No. 1.	Chhakumani Dasya.	205 11 4	..	17 11 4
				8 annas (Group), S. A. No. 2.	Harish Chandra Das Deb Barma.	411 6 10	..	35 6 10
				4 annas (Group), S. A. No. 4.	Chinmoyee Chowdhurani and another.	205 11 5	..	17 11 5
				16 annas share of Hosainpur group of mauzas and 8 as. 16 g. 1 $\frac{247}{329}$ dt. share in 16 annas share of Bishnuganj khamar group of mauzas of this estate will be excluded from the sale.				

Tauzi No.	Name of mahal and pargana.	Sadar jama of whole estate.	Whether the whole estate is to be sold.	If only a share is to be sold, specification of such share or shares.	Names of proprietors of property to be sold.	If only a share is to be sold, the sadar jama of such share.	If the whole estate is to be sold, the arrears due from it.	If only a share is to be sold, the arrears due from it.
1	2	3	4	5	6	7	8	9
		Rs. a. p.				Rs. a. p.	Rs. a. p.	Rs. a. p.
404	Mahal Haragobindapur, pargana Gilahabari.	3,349 7 4	No ..	6as. 10g. 1kt. 2½dt. residuary share.	Khejmatuddin Chowdhury and others.	1,362 3 11	..	86 5 4
				1a. 12g. 1cr. 4½dt., S. A. No. 6.	Mosleyuddin Chowdhury.	338 13 11	..	45 14 1
				All other shares besides that noted will be excluded from the sale.				
421	Mahal Sarifabad, pargana Kardaha.	966 13 5	Yes ..	....	Satyendra Nath Majumdar and another.	..	94 13 3	..
426	Mahal Gopinathpur, pargana Gilahabari.	1,433 14 7	Yes ..	....	Kumar Sarat Kumar Roy.	..	326 11 11	..
469	Mahal Shyampur, pargana Gilahabari.	1,745 3 6	No ..	5 as. 6g. 2cr. 2kt., S. A. No. 2.	Daimuddin Chowdhury and others.	581 11 10	..	60 11 8
				All other shares besides that noted will be excluded from the sale.				
470	Mahal Ramkristapur, pargana Gilahabari.	1,557 12 8	Yes ..	....	Kumar Sarat Kumar Roy.	..	574 9 6	..
474	Mahal Kukhil, pargana Rajnagar.	1,547 15 4	No ..	7 as. 6g. 2cr. 2kt. residuary share.	Maharaja Jagadish Nath Roy and others.	709 7 7	..	68 7 7
				All other shares besides that noted will be excluded from the sale.				
484	Mahal Jalali, pargana Salbari.	806 9 8	Shares noted in column 5 will be put up to sale together.	16 annas (Group) residuary share.	Kishorilal Jhan Chakravarty and others.	275 8 5	..	20 6 3
				16 annas (Group), S. A. No. 1.	Brojendralal Jhan Chakravarty and others.	531 0 10	..	53 11 6
497	Mahal Amjamkhore, pargana Dehatta.	1,075 7 0	Yes ..	....	Satyendra Nath Majumdar and another.	..	110 6 0	..
506	Mahal Sultanpur, pargana Lalbarikhalisa.	991 2 5	No ..	12 as. 7 g. 2 cr. residuary share.	Bibi Ummatal Jahara and others.	766 9 5	..	39 2 6
				All other shares besides that noted will be excluded from the sale.				
785	Mahal Khadimpur, pargana Mahashaw.	1,261 10 10	..	4 as. 19 g. 3 cr. 4/13 kt. residuary share.	Alefuddin Hossain Chowdhury and others.	210 4 9	..	25 0 4
				2 annas, S. A. No. 2 ..	Jagadish Chandra Rai and others.	157 11 4	..	18 13 2
				3 as. 6 g. 2 cr. 2 kt., S. A. No. 3.	Sarifuddin Hossain Chowdhury and others.	262 13 7	..	31 7 6
				1 a. 10 g., S. A. No. 4	Ditto ..	118 4 3	..	14 2 1
				1 a. 10 g. 2 9/13 kt. ..	Alifuddin Hossain and others.	302 4 5	..	36 1 7
				All other shares besides that noted will be excluded from the sale.				

Tauzi No.	Name of mahal and pargana.	Sadar jama of whole estate.	Whether the whole estate is to be sold.	If only a share is to be sold, specification of such share or shares.	Names of proprietors of property to be sold.	If only a share is to be sold, the sadar jama of such share.	If the whole estate is to be sold the arrears due from it.	If only a share is to be sold, the arrears due from it.
1	2	3	4	5	6	7	8	9
		Rs. a. p.				Rs. a. p.	Rs. a. p.	Rs. a. p.
797	Mahal Ganeshbati, pargana Bhulhara.	607 6 5	Yes ..	....	Dharanidhar Ghose Chowdhury and others.	..	45 10 7	..
809	Mahal Akhira, pargana Santosh.	604 11 3	Yes ..	....	Nilobja Prova Debi and Kiran Bala Sinha, guardians on behalf of (*a*) Amrita Gopal Sinha and (*b*) Raghu Nandan Sinha.	..	62 10 4	..
810	Mahal Gulrajpur, pargana Santosh.	604 11 3	Yes ..	....	Satyendra Nath Majumdar and another.	..	62 10 10	..
856	Mahal Bistupur, pargana Fulbari.	3,076 9 0	No ..	10 annas residuary share. All other shares besides that noted will be excluded from the sale.	Umesh Chandra Khashnavis, shebait.	1,922 13 6	..	157 6 7
877	Mahal Gopalpara, pargana Fulbari.	3,184 13 0	No ..	6 as. 6 g. 2 cr. 2 kt. residuary share.	Biman Chandra Dutta Munshi.	1,260 12 2	..	111 2 7
893	Mahal Hazratpur, pargana Kardaha.	2,356 10 8	Shares noted in column 5 will be put up to sale together.	8 annas residuary share. 8 annas, S.A. No. 1 .. All other shares besides that noted will be excluded from the sale.	Manmatha Kumar Roy and others. Mati Mohan Dutta Gupta and others.	1,178 5 4 1,178 5 4	.. ..	123 13 4 123 3 4
910	Mahal Madhabpara, pargana Rajnagar.	1,817 0 11	Yes ..	....	Aftabuddin Chowdhury and others.	..	121 7 10	..
923	Mahal Kawarpur, pargana Nurpur.	1,323 11 10	No ..	10 as. 13 g. 1 cr. 1 kt. residuary share. All other shares besides that noted will be excluded from the sale.	Kamala Charan Sen and others.	882 7 11	..	103 15 9
962	Mahal Toke Krishnapur, pargana Kharail.	593 8 8	Yes ..	....	Satyendra Nath Majumdar and another.	..	62 8 0	..
994	Mahal Nagendra Behary, pargana Baragaon.	646 7 1	Yes ..	....	Nagendra Behary Roy Chowdhury.	..	72 7 1	..
1073	Mahal Girija Ballav, pargana Jhapartali	1,331 6 0	Yes ..	....	Girija Ballav Roy Chowdhury	..	110 6 0	..
1141	Mahal Ramkali Barid Baran, pargana Debikot.	1,947 10 0	Yes ..	....	Panchanan Nandi Chowdhury, guardian on behalf of (*a*) Ram Kali Nandi Chowdhury and (*b*) Barid Baran Nandi Chowdhury.	..	190 10 0	..
1142	Mahal Kumar Krishna, pargana Debikot.	1,731 3 0	Yes ..	....	Kumar Krishna Nandi Chowdhury.	..	178 3 0	..

This notice is issued in respect of instalments of revenue due on or before the 31st Jaistha, 1343 B. S., of which the latest date of payment was 29th June 1936.

[ILLEGIBLE], *for* Collector.

Dinajpur, the 27th August 1936.

Notification A.

NOTICE is hereby given, under sections 6 and 13, Act XI of 1859, that the undermentioned estates and shares of estates in the district of Dinajpur will be put up for sale at the office of the Collector of that district on the 25th September 1936, at 12 noon, for arrears of revenue and other demands which by law are realizable as arrears of land revenue.

When in columns 5, 7 and 9 of the following statement it is stated that only a share is to be sold, it is to be understood that a separate account is kept for that share :—

Tauzi No.	Name of mahal and pargana.	Sadar jama of whole estate.	Whether the whole estate is to be sold.	If only a share is to be sold, specification of such share or shares	Names of proprietors of property to be sold.	If only a share is to be sold, the Sadar jama of such share.	If the whole estate is to be sold, the arrears due from it.	If only a share is to be sold, the arrears due from it.
1	2	3	4	5	6	7	8	9
		Rs. a. p.				Rs. a. p.	Rs. a. p.	Rs. a. p.
65	Mahal Khalora, pargana Khalora.	18,001 12 5	Shares noted in column 5 will be put up to sale together	6 as. 10 g. residuary share.	Girija Ballav Roy Chowdhury.	7,313 3 6	..	878 3 6
				9 as 10 g., S. A. No. 2	Nagendra Behary Roy Chowdhury.	10,688 8 11	..	1,285 8 11
66	Mahal Hekendari, pargana Sashbir.	7,543 1 4	No ..	8 annas residuary share.	Maharaj Bahadur Singh.	5,657 5 0	..	341 8 8
				All other shares besides that noted will be excluded from the sale.				
67	Mahal Nagendra Behary Roy Chowdhury, pargana Dhapartail.	5,054 4 0	Yes ..	....	Nagendra Behary Roy Chowdhury.	..	448 3 9	..
68	Mahal Ghanashyampur, pargana Saibari.	6,374 11 8	Shares noted in column 5 will be put up to sale together.	6 as. 10g. residuary share.	Girija Ballav Roy Chowdhury.	2,580 11 8	..	223 11 8
				9 as. 10 g. S. A. No. 2	Nagendra Behary Roy Chaudhury.	3,785 0 0	..	327 0 0
69	Mahal Narayanpur, pargana Saibari.	5,578 6 0	Do. ..	6 as. 10 g. residuary share.	Girija Ballav Roy Chowdhury.	2,200 2 6	..	191 8 3
				9 as. 10 g. S. A. No. 2	Nagendra Behary Roy Chowdhury.	3,312 4 0	..	281 9 10
70	Mahal Bisrampur, pargana Baragaon.	6,957 14 0	Do. ..	6 as. 10 g. residuary share.	Girija Ballav Roy Chowdhury.	2,826 10 2	..	255 10 2
				9 as. 10 g. S. A. No. 2	Nagendra Behari Roy Chowdhury.	4,131 3 10	..	373 3 10
105	Mahal Ghoraband, pargana Deora.	5,737 4 6	Yes ..	....	Ramjadu Banerjee.	..	669 4 6	..
184	Mahal Rajnagar, pargana Rajnagar.	5,191 10 11	Yes ..	....	Maharaj Bahadur Singh.	..	394 10 11	..
264	Mahal Mirzapur, pargana Gilahabari.	6,893 14 4	Yes ..	....	Kumar Sarat Kumar Roy.	..	708 10 0	..
456	Mahal Gangaprosad, pargana Shashbir.	5,931 15 7	Yes ..	....	Niroda Sundari Chowdhurani and another.	..	619 14 10	..
462	Mahal Safanagar, pargana Kardaha.	7,637 8 6	Yes ..	....	Syed Badrud Doya and others.	..	786 8 6	..
463	Mahal Amrah, pargana Gilahabari.	5,016 2 5	Yes ..	....	Broja Bhusan Roy Chowdhury and others.	..	525 2 5	..

This notice is issued in respect of instalments of revenue due on or before the 31st Jaistha, 1343 B.S., of which the latest date of payment was 29th June 1936.

[ILLEGIBLE], *for* Collector.

Dinajpur, the 27th August 1936.

Notification A.

NOTICE is hereby given under sections 6 and 13 of Act XI of 1859 that the undermentioned estates and shares of estates in the district of Hooghly will be put up for sale at the office of the Collector of that district on the 25th September 1936 at 12 noon for arrears of revenue and other demands which by law are realizable as arrears of land revenue.

When in columns 5, 7 and 9 of the following statement it is stated that only a share is to be sold, it is to be understood that a separate account is kept for that share :—

Tauzi No.	Name of mahal and pargana.	Sadar jama of the whole estate.	Whether the whole estate is to be sold.	If only a share is to be sold, specification of such share or shares.	Names of proprietors of property to be sold.	If only a share is to be sold, the sadar jama of such share.	If the whole estate is to be sold, the arrears due from it.	If only a share is to be sold, the arrears due from it.
1	2	3	4	5	6	7	8	9
		Rs. a. p.				Rs. a. p.	Rs. a. p.	Rs. a. p.
26-Res.	Malikapur, pargana Baligori.	10,552 14 0	..	2 as. 8 g. 3 k. of mauza Harpur. 16 annas share of mauzas Senpur, Malikapur, Balarampur and Mohanbati. 8 annas share of mauzas Jotebanshi, Samsarpur, Parbatipur. 7 annas share of mauzas Nayamatpur, Tullan, Pirigpur, Bhoramollapur, Jote Krishnadas and Kalikapur.	Samarendra N. Sinha Ray and others.	4,498 8 9	..	5,135 3 7
37/7	Hridayrampur, pargana Chowmaha.	44,805 14 9	..	12 as. 16 g. share of mauzas in serial Nos. 9, 10, 11— (9) Baikuntapur, Hridayrampur, Alaipur, Paisa, Katundi and Katundibahir. (10) Jagannathpur, Kashijote, Narayanpur, Dulia, Panchra, Paramanandpur, Mahespurpati, Gopalpur, Maheswarpur *alias* Doyarapur, Bhowanipur, Bansdarun, Bangalpur, Metaharchak Sagrai and Bangalpurpati Ballavpur. (11) Ballavipur, Jibonjote, Natuyapur, Baneswarpur, Ramkrishnapur, Belgachiya, Kastagara Anuliya, Khanpur, Gangarampur, Kamalpur Kismat, Chartanmabati Kismat, Sangramjote, Dhantikri, Purandarpur Kismat, Chowhatta, Parameswripur, Rupraj-pur, Malikandi, Kadipara, Ganespur, Chunarchak, Basudevpat, Kristopur, Malikapur, Dadhi Brahmanpur and Raghunathpur.	Monohar Mukherji.	10,566 8 2	..	6,782 2 10
37/8	Ditto ..	44,805 14 9	..	12 as. 16 g. share in mauzas in serial Nos. 1, 2, 5— (1) Nachuldanga, Lakshmanpur, Prosadpur and Digribadey Khagragachi. (2) Panschala, Bhagabatipur, Madhabjote, Jezur, Kasbapara, Nandanpur, Raktapara, Ankapara, Naiti, Jinpur, Sansanda, Barasanda Samil Patahar, Hatampur, Pallagachi, Kamalpukuria and Isteya. (5) Raghunathpur, Radhaballavpur, Srirampur, Khorasida *alias* Satghora and Sadasivabati.	Mahendra Nath Mookerji.	10,036 7 0	..	6,093 14 0

Tauzi No.	Name of mahal and pargana.	Sadar jama of the whole estate.	Whether the whole estate is to be sold.	If only a share is to be sold, specification of such share or shares.	Names of proprietors of property to be sold.	If only a share is to be sold, the sadar jama of such share.	If the whole estate is to be sold, the arrears due from it.	If only a share is to be sold, the arrears due from it.
1	2	3	4	5	6	7	8	9
		Rs. a. p.				Rs. a. p.	Rs. a. p.	Rs. a. p.
37/9	Hridayrampur, pargana Chowmaha.	44,805 14 9	..	12 as. 16 g. share of mauzas in serial Nos. 3, 4— (3) Dhanyagacha, Paikpara, Bhagirathpur, Monoharpur, Sangramchawk, Amatpur, Amdhara *alias* Ghosa. (4) Annatapur *alias* Tenpur, Annandapurbirija *alias* Paighata, Barija *alias* Paighata, Bonwari Bankajalkar, Barijajangalbar, Bartjabaxitola *alias* Jhukra Sarsa, Barija Jalkar *alias* Kadamtola, Bhatpara, Bhairabpur, Chinneychak, Shawta, Chingrigaria, Changgoria, Doulatchak *alias* Sudamchak, Govindapur, Gopalpur, Harinarainpur, Bijli, Joyantipur, Jagannathpur, Jalkar *alias* Kharijamoura, Kadamtola, Kanaichak, Keagoriah, Keagoriabandh, Khajeechak *alias* Rangamata, Khejurdanga, Murakata, Mathurapur, Mirkuli *alias* Bali Tentalia, Palasi, Palangapur, Paikmajiya, Pratappur, Ramdespur, Salnah *alias* Basanbar Sukhsitala, Tenpur, Tenpur Kismat, Tentulia and Dayamauza.	Bhupendra Nath Mukherji	10,667 4 0	..	6,365 8 0
37/10	Ditto ..	44,805 14 9	..	12 as. 15 g. share of mauzas in serial No. 7 — (7) Ghatra, Kankrajole, Ramdevpur, Basubati and Narayanpur.	Trustee Mahendra N. Mukherji.	4,100 0 0	..	946 8 0
40/3	Beli, pargana Baligori.	10,107 2 0	..	7 annas ..	Kedar Nath Mukherji and others.	4,421 14 0	..	525 4 0
44-Res.	Pandra, pargana Balia.	11,150 12 0	..	4 annas ..	Purna Ch. Chandhuri.	2,787 4 1	..	430 0 7
47-Res	Sanchitara, pargana Panduah.	47,385 11 11	..	8 annas share of mauzas Jatrasudhi, Jatrasudhi *alias* Nutanchar, Balikismat and Balichar Kharija Osmanpur, Dumurdaha, Charmadhusudanpur and 16 annas share of the following mauzas Saleswarpur, Haripur, Benodepur, Ekloki, Kis Ekloki, Jamirbarijbati, Patool, Kariji Khanpur, Dontatpur, Ramchandra Chakran Kundhara, Mathurpur, Kirtinagar, Pavan, Akutipota, Jotekusal, Rampur, Manpara Acharjapara, Matsmad Dakhinpara, Kagchipara, Rahimpurpara, Radha Krishna Neogy's Khariji Proja, Salukgari, Kotalpara, Ghosepur, Ramanathpur, Ramnathpur, Soonia, Duttapati Sirajabad *alias* Mayapur, Duttabati, Sankarpati, Balabati, Balabati Hatchandi, Bhaskar Chawk Gokulpur, Batchandri, Krishnajote, Chaitpur, Panchdeuli, Depaldighi, Baladighi Ramkantapur, Nealy, Fatepur, Krishnachandra, Lakshmikantapur, Madanbati, Panchlai	Rajendra N. Roy as receiver to the estate of Ananinath Mookerjee.	23,764 14 7	..	29,336 5 10

Tauzi No.	Name of mahal and pargana.	Sadar jama of the whole estate.	Whether the whole estate is to be sold.	If only a share is to be sold, specification of such share or shares.	Names of proprietors of property to be sold.	If only a share is to be sold, the sadar jama of such share.	If the whole estate is to be sold, the arrears due from it.	If only a share is to be sold, the arrears due from it.
1	2	3	4	5	6	7	8	9
		Rs. a. p.				Rs. a. p.	Rs. a. p.	Rs. a. p.
				Reshula, Rampur *alias* Sahashrarampur, Daijhati *alias* Srimukhbati, Paranchapati Palkpara, Lalitagori, Ramchandrapur, Brindaban Chawk, Chougdarbundh, Naricha, Kusaljote.				
54-Res.	Thalpara pargana Panduah.	1,066 1 0	..	8 as. 3 kag 11 til 9 til kag 10 til ganda share of mauzas Srirambati, Kanur, Nakurthan Charaihati Gossainpur *alias* Monoharpur, Matukpur, Golagori, Idrakpur, Bhojanpur, Brahampur, Somragori, Hampur, Purusothampur Kabirhati, Magura, Balarampur and Nijthalpara.	Sourindra Nath Mitra and Anathnath Roy as joint receivers to the estate of Sourendra N. Mitra and others.	522 12 0	..	39 0 0
				7 as. 8 g. 2 k. 3 kag. 16 til share of mauzas Panchgora, Daihat Arigori, Srifala, Bagmaidan, Saibona and Kalisunda.				
-D.	Gurbari, pargana Chowmaha.	2,695 15 0	..	8 annas share of mauzas Kashipur and Katgora.	Sm. Bidhumukhi Dasi.	590 6 0	..	75 3 0
72-A	Gopalnagar, pargana Jahanabad.	2,917 11 2	..	3as. 10g. ..	Dharani Mohan Ray.	638 3 9	..	83 1 9
77-1	Bandipur, pargana Bandipur.	14,781 4 0	..	2as. 13g. 1k. 1kt. ..	Minor Amarjit Lal Choudhuri and three others, guardian mother Padmabala Devi.	2,463 10 4	..	3,046 13 8
77-3	Ditto ..	14,781 4 0	..	2as. 13g. 1k. 1kt. ..	Birendra Lal Chaudhury.	2,463 10 4	..	2,581 0 8
77-6	Ditto ..	14,781 4 0	..	17gds. 3k. 1 dt. ..	Ditto ..	821 4 0	..	869 6 7
82-1	Rampara, pargana Balia.	10,514 6 0	..	11as. 8g. 2k. ..	Kumudprakas Ganguly and others as trustees to the estate of late Maharaja Sir Jatindra Mohan Tagore, K.C.S.I.	7,517 15 3	..	983 2 0
85-6	Kunjaban, pargana Baligori.	10,417 7 0	..	4 gandas ..	Sudhansu Sekhar Nandy and others.	130 3 8	....	17 0 3
85-9	Ditto ..	10,417 7 0	..	1 g. 1 k. 1 kt. ..	Ditto ..	43 6 7	....	5 10 9
88	Anupala, pargana Arsha.	1,364 2 10	Entire	16 annas ..	Bijay Gopal Ganguly and others.	..	180 13 2	..
107-2	Huda-Basudevpur, pargana Arsha.	9,099 11 0	..	2 as. 1 g. 1 k. 2 kt. 3 dt.	Gour Krishna Sen and others.	1,182 3 2	..	154 4 3
119	Hatikanda Kismat, pargana Hatikanda.	1,279 5 2	Entire	16 annas ..	Birendra Lal Chaudhury and others.	..	1,374 8 5	..
126-Res.	Sitampur, pargana Hatikanda.	2,107 11 0	..	17 g. 3 k. 1 dt. share of mauza Gopalpur. 8 as. 6 g. 2 k. 2 kt. share of mauza Kanaipur. 7 as. 4 g. 1 k. 2 kt. 7 til share of mauza Dumurdiah. 12 as. 1 k. 1 kt. 1 dt. 1 job share of mauza Jaypur. 7 as. 9 g. 2 k. 1 kt. 1 dt. 2 job. share of mauza Panchrakhi. 12 as. 6g. 2 k. 2 kt. share of mauza Sivarampur. 12 as. 13 g. 2 kt. 2dt. 2 job 2 til share of mauza Saraswatipur. 16 annas share of mauza Sadhubangali.	Sourendra Nath Chatterjee and others.	987 6 10	..	56 12 1
				10 as. 13 g. 1 k. 1 kt. share of mauza Dakchara.	Akhoy K. Sett and others.			
				8 as. 17 g. 3 k. 1 dt. share of mauza Boga.	Suresh Ch. Ray and others.			

Tauzi No.	Name of mahal and pargana.	Sadar jama of the whole estate.	Whether the whole estate is to be sold.	If only a share is to be sold, specification of such share or shares.	Names of proprietors of property to be sold.	If only a share is to be sold, the sadar jama of such share.	If the whole estate is to be sold, the arrears due from it.	If only a share is to be sold, the arrears due from it.
1	2	3	4	5	6	7	8	9
		Rs. a. p.				Rs. a. p.	Rs. a. p.	Rs. a. p.
126-F.	Sliampur, pargana Hatikanda.	2,107 11 0	..	5 g. 3 k. 2 kt. 1 job share of mauza Joypur; 11 g 3 k. 1 kt. 2 job share of mauza Panchraki; 4 g. 1 k. 2 kt. 1 dt. share of mauza Sivarampur; 5 g. 2 kt. 2 job share of mauza Saraswatipur; 17 g. 3 k. 1 dt. share of mauza Boga; 4 g. 1 k. 2 kt. 11 til share of mauza Kamalpur.	Bhaja Govinda Ray.	29 14 0	..	2 14 0
126-H.	Ditto ..	2,107 11 0	..	13 g. 1 k. 1 kt. share of mauza Kamalpur. 17 g. 2 k. 2 kt. 27 til share of mauza Dumurdah; 1 a. 15 g. 2 k. 2 dt. share of mauza Panchraki; 13g. 1k. 1kt. share of mauza Sivarampur; 13 g. 1 k. 1 kt. share of mauza Saraswatipur; 17 g. 3 k. 1 kt. share of mauza Jaypur; 2 as. 13 g. 1 k. 1 kt. share of mauza Boga.	Nirmal Chandra Sircar and others. Hara Govinda Roy.	93 4 0	..	5 0 0
126-J.	Ditto ..	2,107 11 0	..	4 g. 1 k. 2 kt 6 til share of mauza Kamalpur; 4 g. 1 k. 2 kt. 6 til share of mauza Dumurdah; 5 g. 3 k. 2 kt. 1 job. share of mauza Jaypur; 11 g. 3 k. 1 kt. 2 job share of mauza Panchraki; 4 g. 1 k. 2 kt. 1 dt. share of mauza Sivarampur; 5 g. 2 kt. 2 job. share of mauza Saraswatipur; 17 g. 3 k. 1 dt. share of mauza Boga.	Mritunjay Ray and others.	29 14 0	..	2 14 0
128	Dadpur, pargana Powuan.	512 9 4	Entire	16 annas ..	Lala Nani Gopal Babu and others.	..	46 14 11	..
134-Res.	Akna, pargana Powuan.	692 9 4	..	8 annas ..	Minor Giridhari Lal Mukherji and others under the guardianship of their mother Annapurna Devi.	346 4 4	..	39 1 1
150	Haripur, pargana Balia.	6,818 1 4	Entire	16 annas ..	Kumud Prokas Ganguly and others as trustees to the estate of late Maharaja Sir Jatindra Mohan Tagore, K.C.S.I.	..	890 9 11	..
153-Res.	Mallikhati, pargana Bora.	2,826 13 0	..	2 as. 13 g. 1 k. 1 kt. ..	Sarat Chandra Goswami.	378 10 4	..	37 12 5
153-C.	Ditto ..	2,826 13 0	..	2 annas ..	Ditto ..	371 0 1	..	38 14 0
153-D.	Ditto ..	2,826 13 0	..	2 annas ..	Ditto ..	371 0 1	..	38 14 0
153-E.	Ditto ..	2,826 13 0	..	1a. 12 g. 1 k. 1 kt. ..	Ditto ..	299 14 3	..	31 5 6
153-I.	Ditto ..	2,826 13 0	..	1 a. 12 g. 1 k. 1 kt. ..	Ditto ..	299 13 6	..	31 6 9
153-3.	Ditto ..	2,826 13 0	..	2 annas ..	Ditto ..	371 0 0	..	38 14 0
163	Chikranda, pargana Darsha.	806 8 8	Entire	16 annas ..	Kumud Prokas Ganguly and others as trustees to the estate of late Maharaja Sir Jatindra Mohan Tagore, K.C.S.I.	..	26 14 10	..
1791	Guptipara Char, pargana Mandalghat.	765 0 0	Do. ..	16 annas ..	Jatindra N. Sen and others.	..	597 0 0	..

Tauzi No.	Name of mahal and pargana.	Sadar jama of the whole estate.	Whether the whole estate is to be sold.	If only a share is to be sold, specification of such share or shares.	Names of proprietors of property to be sold.	If only a share is to be sold, the sadar jama of such share.	If the whole estate is to be sold, the arrears due from it.	If only a share is to be sold, the arrears due from it.
1	2	3	4	5	6	7	8	9
		Rs. a. p.				Rs. a. p.	Rs. a. p.	Rs. a. p.
2034	Sultanpur Char, pargana Patmahal.	938 7 9	Entire	16 annas ..	Sukeshi Dasi ..	..	164 3 0	..
3525	Nada, pargana Bora.	2,968 13 0	Do. ..	16 annas ..	Hrishikesh Chatterji and others.	..	552 8 0	..
3541-Res.	Kharsarai, pargana Bora.	1,311 10 6	..	8 annas ..	Bhujendra N. Biswas and others.	655 13 0	..	108 5 3
3633-Res.	Chutipur and others, pargana Chutipur.	706 8 8	..	5 as. 6 g. 2 k. 2 kt. ..	Birendra Nath Bhattacharji and others.	235 8 8	..	15 2 0
3633-B.	Ditto ..	706 8 8	..	6 as. 13 g. 1 k. 1 kt.	Ditto ..	294 6 9	..	18 6 6
3807-1.	Parlarpur, pargana Bhursit.	1,559 14 11	..	2 annas ..	Nikunja Behari Sinha Ray.	195 0 0	..	8 8 0
3807-2.	Ditto ..	1,559 14 11	..	2 annas ..	Jamini Kanto Sinha Ray and others.	195 0 0	..	7 10 0
3989 A.	Muhammad Aminpur, pargana Bhursit.	79,522 4 9	..	8 annas. S. A. covers the eight annas share of the whole estate minus 16 annas share of mauzas Nigampur, Ganeshpur, Sahana, Sakhya.	Kumar Sarat Kumar Ray Bahadur.	39,396 14 0	..	1,587 7 2
4001	Muhammadpur, pargana Pownan.	593 13 2	Entire	16 annas ..	Kumud Prokas Ganguly and others as trustees to the estate of late Maharaja Sir Jatindra Mohan Tagore, Bahadur, K.C.S.I.	..	62 9 0	..
4082-B.	Kalupukuria, pargana Jahanabad.	13,518 0 0	..	2 as. 13 g. 1 k. 1 kt. share of mauzas Kalupukuria Ghosepur, Debkhunda, Basantapur, Mamudpur, Joykrishnapur Kismat, Ghesna.	Nakur Ch. Ray and others.	2,253 2 6	..	296 4 5
4082-2.	Ditto ..	13,518 0 0	..	1 a. 17 g. 2 k. 3 jab share of mauza Ghosepur 1a. 2g. 1k. 3dt. share of mauza Joykrishnapur Kismat.	Nabakumar Hazra and others.	844 6 9	..	50 0 0
4320	Shyambazar, pargana Jahanabad.	999 7 9	Entire	16 annas	Kalipada Ghose and another.	..	124 6 6	..
	Temporarily settled estates.							
3479-Res.	Rasulpur Char, pargana Patuchal.	568 0 0	..	8 annas ..	Khagendranand Asram.	284 0 0	..	71 0 0
3479-1.	Ditto .. (Settled for 15 years from 1st April 1933 to 31st March 1948.)	568 0 0	..	8 annas ..	Prasun Kumari Debi.	284 0 0	..	71 0 0

All shares other than those specified will be excluded from sale.

These estates are being advertised for sale for instalments of revenue which were due on or before the 31st Jaistha, 1343 B.S., of which the latest date of payment was 30th June 1936.

S. P. GHOSE, Collector.

Hooghly, the 24th August 1936.

Notice for sale of Timber.

Chittagong Division, 1936-37.

THE trees as per this list will be sold in public auction by the Divisional Forest Officer, Chittagong Division, at the following places on the dates noted against each, at 11 a.m., subject to the conditions laid down at the end :—

(1) Lots in Ramgarh Sitakund, South Sitakund, Fatikcheri, Patiya and Jaldi Ranges at the Chittagong Forest Office—25th September 1936.

(2) Lots in Garjania Range at Cox's Bazar Forest Bungalow—23rd September 1936.

Intending purchasers are invited to inspect the trees before the date of sale.

Ramgarh—Sitakund Range.

Hazarikhil Clear Felling Coupe of 1936-37.

Lot No.	Serial No. of trees.	Species.	B. H. girth classes.								Total.
			3′ to 3′11.″	4′ to 4′11.″	5′ to 5′11.″	6′ to 6′11.″	7′ to 7′11.″	8′ to 8′11.″	9′ to 9′11.″	10′ and over.	
1	1—131, 134 136, 138 and 146—148.	Sil Garjan	2	4	3	1	7	1	4	9	31
		Tali	2	5	4	..	..	..	..	..	11
		Khair Jam	2	1	1	1	..	..	..	..	5
		Pitraj	1	..	1	..	..	..	..	..	2
		Dhaki Jam	3	3	2	1	2	1	..	..	12
		Kanak	1	2	..	1	..	..	..	..	4
		Chapalish	1	1	1	..	..	..	..	..	3
		Suruj Bed	1	..	..	..	..	..	..	..	1
		Bandarhola	1	..	..	..	1	..	..	1	3
		Uriam	..	1	1	1	..	..	..	..	3
		Barta	1	..	..	..	..	..	..	..	1
		Silbatna	4	..	..	..	..	..	..	..	4
		Thumka Bhadi	..	..	1	..	..	..	..	..	1
		Bahera	..	1	..	..	..	..	..	..	1
		Jam (Misc.)	1	..	..	..	..	..	..	..	1
		Chaulmugra	1	..	..	..	..	..	..	..	1
		Arsal	..	1	..	..	..	..	..	..	1
		D. Class	30	15	6	1	..	1	..	..	53
		Total ..	51	34	20	6	10	3	4	10	138
2	152—365	Sil Garjan	3	4	6	10	7	3	2	6	41
		Tali	3	1	1	..	..	..	..	..	5
		Khair Jam	..	1	..	..	..	..	..	..	1
		Pitraj	2	3	..	..	1	..	..	..	6
		Dhaki Jam	..	..	..	2	..	..	..	..	2
		Kanak	5	3	3	..	..	..	..	..	11
		Chapalish	9	4	6	3	3	..	..	..	25
		Bandarhola	..	..	5	3	5	..	1	..	14
		Uriam	..	3	1	..	..	..	..	..	4
		Barta	..	..	1	..	..	..	..	..	1
		Sil Batna	6	6	1	..	..	..	..	..	13
		Jam (Misc.)	..	..	1	..	..	..	..	..	1
		Chaulmugra	9	5	..	..	..	..	..	..	14
		Arsal	..	1	..	..	..	..	..	..	1
		Sil Bhadi	..	1	1	..	..	..	..	..	2
		Gutgutia	7	..	..	1	..	..	..	..	8
		Chundul	..	..	..	..	..	..	..	1	1
		Tejbahal	1	..	..	..	..	..	..	..	1
		Loubhadi	..	..	1	1	..	..	..	..	2
		D. Class	26	21	9	2	1	2	..	..	61
		Total ..	71	53	36	22	17	5	3	7	214
3	366—560	Sil Garjan	2	1	..	9	4	2	4	7	29
		Tali	6	..	1	..	..	..	..	..	7
		Khair Jam	4	..	..	..	..	..	..	..	4
		Pitraj	3	2	4	..	1	1	..	..	11
		Dhaki Jam	2	..	1	..	1	2	1	..	7
		Kanak	..	1	1	..	..	2	..	..	4
		Chapalish	..	2	..	..	..	..	..	..	2
		Suruj Bed	..	2	..	2	..	..	..	..	4
		Bandarhola	..	..	..	1	..	..	..	..	1
		Uriam	1	1	..	2	1	1	..	..	6
		Barta	2	..	..	..	..	..	..	..	2
		Sil Batna	1	..	2	..	..	..	..	..	3
		Bahera	1	..	..	..	..	..	..	..	1
		Dharmara	1	..	..	1	..	..	..	..	2
		Tejbahal	1	..	..	..	..	..	..	..	1
		Jam (Misc.)	..	..	1	..	..	..	..	..	1
		Gutgutia	6	1	..	..	1	..	..	..	8
		Chaulmugra	11	7	2	..	..	..	..	..	20
		Telsur	1	1	..	..	..	1	..	..	3
		Arsal	..	1	..	..	..	..	..	..	1
		Sil Bhadi	..	1	..	..	..	1	..	..	2
		Dhup treo	..	..	..	..	1	..	..	..	1
		Chikrassi	..	..	..	..	..	1	..	..	1
		Sonalu	1	..	..	..	..	..	..	..	1
		D. Class	23	33	8	6	2	1	..	..	73
		Total ..	66	53	20	21	11	12	5	7	195

Fatickcheri Range.

Uttar Kanchannagar Selection Felling Coupe of 1936-37.

Lot. No.	Serial No. of trees.	Species.	B. H. girth classes.							Total.
			4′ to 4′ 11″.	5′ to 5′ 11″.	6′ to 6′11″.	7′ to 7′ 11″.	8′ to 8′11″.	9′ to 9′ 11″.	10′ and over.	
I	1—30	Chapalish	..	1	3	4	7	2	5	22
		Kanak	..	1	..	..	..	..	..	1
		Jam	..	..	2	1	1	..	..	4
		Bohera	..	..	..	..	2	..	..	2
		Bhadi	..	..	..	..	..	..	1	1
		Total ..	..	2	5	5	10	2	6	30
II	31—66	Kamdeb	1	..	..	..	..	..	..	1
		Chapalish	..	1	1	2	2	4	2	12
		Jam	..	2	2	3	..	..	..	7
		Kanak	..	6	3	4	1	..	..	14
		Garjan	..	1	..	..	..	..	..	1
		Titpai	..	..	..	1	..	..	..	1
		Total ..	1	10	6	10	3	4	2	36
III	67—94	Chapalish	..	1	..	1	..	6	6	14
		Jam	..	2	..	2	..	..	..	4
		Kadam	..	1	..	1	..	..	..	2
		Karai	..	1	..	1	..	..	..	2
		Kanak	..	..	2	1	..	..	..	3
		Arzan	..	..	..	..	..	1	..	1
		Garjan	..	..	..	..	..	..	2	2
		Total ..	..	5	2	6	..	7	8	28

South Sitakund Range.

Baramasia Selection Felling Coupe of 1936-37.

Lot No.	Serial No. of trees.	Species.	B. H. girth classes.							Total.
			3′ to 3′11.″	4′ to 4′11.″	5′ to 5′11.″	6′ to 6′11.″	7′ to 7′11.″	8′ to 8′11.″	9′ to 9′11.″	10′ and over.	
1	1—18	Garjan	..	..	..	..	1	..	2	6	9
		Jam (Bara)	..	..	1	..	1	..	1	..	3
		Dakhi Jam	..	..	..	..	..	2	..	..	2
		Jeal Bhadi	..	..	..	..	1	..	..	..	1
		Kanak	..	..	..	1	..	..	..	..	1
		Toon	..	..	..	..	..	..	1	..	1
		Chapalish	..	..	..	..	..	..	1	..	1
		Total ..	..	..	1	1	3	2	5	6	18

Patiya Range.

Sonaicheri Selection Felling Coupe of 1932-33.

(Unsold lot No. 4 of 1932-33.)

Lot No.	Serial No. of trees.	Species.	B. H. girth classes.								Total.
			3′ to 3′11″.	4′ to 4′11″.	5′ to 5′11″.	6′ to 6′11″.	7′ to 7′11″.	8′ to 8′11″.	9′ to 9′11″.	10′ and over.	
4(i)	1—35	Champ	..	..	..	..	..	..	..	6	6
		Bhadi	..	1	..	1	3	..	..	..	5
		Koroi	..	..	..	1	..	..	..	..	1
		Garjan	..	..	..	..	1	2	3	7	13
		Bolsor	..	..	..	..	..	..	..	4	4
		Bandarhola	..	..	..	..	..	1	1	..	2
		Haritaki	..	..	..	..	..	1	..	..	1
		Chapalish	..	..	..	..	..	1	..	..	1
		Telsur	..	..	..	..	..	..	..	1	1
		Others	..	..	..	..	..	..	..	1	1
		Total ..	..	1	..	2	4	5	4	19	35
4(iii)	71—105	Champ	..	..	..	..	..	1	1	5	7
		Bhadi	..	..	..	..	1	1	1	..	3
		Garjan	..	..	..	..	1	3	..	7	11
		Bolsor	..	..	..	..	..	..	..	3	3
		Bandarhola	..	..	..	..	..	1	4	1	6
		Chapalish	..	..	..	..	1	1	..	1	3
		Dhobi Pitraj	..	..	..	..	..	1	..	1	2
		Total ..	..	..	..	..	3	8	6	18	35
4(iv)	106—140	Champ	..	..	..	..	..	..	1	7	8
		Garjan	..	..	..	..	..	1	2	15	18
		Bolsor	..	..	..	..	..	..	1	1	2
		Bandarhola	..	..	..	..	1	..	1	2	4
		Chapalish	..	..	..	..	..	..	..	1	1
		Dhobi Pitraj	..	..	..	..	1	..	..	..	1
		Haritaki	..	..	..	..	..	..	1	..	1
		Total ..	..	..	..	..	2	1	6	26	36

Jaldi Range.

Khas Forest Selection Felling Coupe of 1930-31.

(Harbhang New Reserve.)

Lot No.	Serial No. of trees.	Species.	B. H. girth classes.							Total.
			4″ to 4′11″.	5″ to 5′11″.	6′ to 6′11″.	7′ to 7′11″.	8′ to 8′11″.	9′ to 9′11″.	10′ and over.	
20	1—15	Garjan	3	7	1	2	1	..	1	15
21	16—30	Garjan	5	3	6	1	..	..	..	15
22	31—51	Garjan	6	11	1	1	1	..	..	20
		Jam	..	..	..	.. 1	..	..	..	1
23	52—73	Garjan	12	5	5	..	..	..	..	22
24	74—88	Garjan	6	6	1	..	..	..	..	13
		Chapalish	..	..	1	..	..	..	..	1
		Telsur	1	..	..	..	..	..	..	1
25	89—103	Garjan	5	8	2	..	..	..	..	15
		Total ..	38	40	17	5	2	..	1	103

Selection Felling Coupe of 1936-37.

Chotahatia.

Lot No.	Serial No. of trees.	Species.	B. H. girth classes.								Total.
			3′ to 3′11.″	4′ to 4′11.″	5′ to 5′11.″	6′ to 6′11.″	7′ to 7′11.″	8′ to 8′11.″	9′ to 9′ 11.″	10′ and over.	
1	1-11	Garjan ..	..	..	..	..	..	1	..	1	2
		Gamar ..	..	..	..	..	1	..	..	..	1
		Toon ..	..	..	..	..	1	..	..	..	1
		Karai ..	..	..	..	1	1	2	..	..	4
		Bandarhola ..	..	..	..	..	..	..	..	3	3
		Total ..									11
2	12-14	Garjan ..	..	..	..	..	..	..	..	1	1
	16-28	Toon ..	..	..	..	..	2	..	1	..	3
		Chikrassi ..	..	..	..	..	..	1	..	..	1
		Chapalish ..	..	..	..	..	1	1	..	..	2
		Pitraj ..	..	..	..	..	..	1	..	..	1
		Chikrassi ..	..	..	..	..	..	..	1	..	1
		Banderhola ..	..	..	..	..	1	1	1	..	3
		Koroi ..	..	..	..	..	1	..	..	..	1
		Jam ..	..	..	..	1	..	..	..	..	1
		Totuia ..	..	..	..	1	..	..	..	..	1
		Bhadi ..	..	..	..	1	..	..	..	..	1
		Total ..									16

Jaldi.

1	1-18	Bhadi ..	..	..	..	1	1	..	..	1	3
	&	Banderhola ..	..	..	..	1	2	2	1	1	7
	42	Garjan ..	..	..	..	..	..	..	..	1	1
		Karai ..	..	..	..	2	1	2	..	..	5
		Rongtree ..	..	..	..	..	..	1	..	..	1
		D. Class ..	..	..	..	..	1	..	..	..	1
		Chapalish ..	..	..	..	..	1	..	..	..	1
		Total ..									19
2	19-31	Karai ..	..	..	..	2	1	..	1	..	4
	&	Lampati ..	..	..	1	..	..	1	1	..	3
	43	Kainjal ..	..	..	..	..	..	..	..	1	1
		Rongtree ..	..	..	..	1	..	1	..	..	2
		Bhadi ..	..	..	..	..	2	..	1	..	3
		D. Class ..	..	..	..	..	..	1	..	..	1
		Total ..									14
3	32-41	Karai ..	..	..	..	1	1	1	1	..	4
		Bhadi ..	..	..	..	1	..	..	..	..	1
		Lampati ..	..	..	..	1	1	..	..	..	2
		Total ..									7

Bartali.

1	1-9	Garjan ..	..	..	..	..	..	3	1	2	6
		D. Jam ..	..	..	..	1	..	..	..	..	1
		Jam ..	..	..	1	1	..	..	..	..	2
		Total ..									9
2	10-20	Garjan ..	..	..	..	..	..	1	1	..	2
		Chapalish ..	..	..	..	..	..	..	1	..	1
		Jam ..	..	..	5	2	1	..	..	..	8
		Total ..									11
3	21-30	Garjan ..	..	..	..	1	2	..	..	..	3
		Jam ..	..	..	4	1	1	1	..	..	7
		Total ..									10

Jaldi Range.

Puicheri Coppice Coupe of 1936-37.

Section No.	Serial No. of trees.	Species.	B. H. girth classes.								Total.
			3′ to 3′11.″	4′ to 4′11.″	5′ to 5′11.″	6′ to 6′11.″	7′ to 7′11.″	8′ to 8′11.″	9′ to 9′11.″	10′ and over.	
I ..	1—12	Garjan ..	..	..	5	1	..	..	..	..	6*
		Jam ..	1	3	1	..	.	1	..	..	6
		Total ..	1	3	6	1	..	1	..	..	12

Napora Coppice Coupe.

I ..	1—24	Garjan ..	..	4	6	1	..	..	..	..	11
		Jam ..	2	3	..	..	..	..	..	..	5
		Khair Jam ..	..	..	1	..	..	..	..	..	1
		D Class ..	3	3	..	..	..	1	..	..	7
		Total ..	5	10	7	1	..	1	..	..	24

Barabakia Block Coppice Coupe of 1936-37.

I ..	..	Garjan ..	25	29	19	4	7	2	..	..	86
		Jam ..	5	..	..	..	..	..	..	..	5
		Total ..	..	..	..	..	..	..	..	..	91
II ..	..	Garjan ..	24	10	17	2	..	..	..	1	54
		Jam ..	..	1	..	1	..	..	..	..	2
		D Class ..	1	2	1	4	..	..	..	1	9
		Total ..	..	..	..	..	..	..	..	..	65
III ..	..	Garjan ..	32	7	7	1	..	..	..	..	47
		C Class ..	2	2	2	..	..	..	..	1	7
		D Class ..	2	..	..	..	..	..	..	..	2
		Total ..	..	..	..	..	..	..	..	..	56
IV ..	232—241	Garjan ..	7	..	..	..	..	..	..	..	7
		Karai ..	1	..	..	..	..	..	..	..	1
		Uriam ..	..	2	..	..	..	..	..	..	2
		Total ..	..	..	..	..	..	..	..	..	10

Sonaicheri.

I ..	242-277	Garjan ..	2	6	2	5	2	1	..	..	18
		C Class ..	..	6	2	..	..	..	..	..	8
		D Class ..	1	4	2	2	..	..	..	1	10
		Total ..	..	..	..	..	..	..	..	..	36
II .	278—304	Garjan ..	5	4	2	2	..	1	..	..	14
		Telsur ..	..	1	..	..	..	..	..	..	1
		Jam ..	3	3	..	1	..	..	..	..	7
		D Class ..	..	2	2	..	1	..	..	..	5
		Total ..	..	..	..	..	..	..	..	..	27

*(Nos. 3 and 10 are hollow.)

Section No.	Serial No. of trees.	Species.	B. H. girth classes.								Total.
			3′ to 3′11.″	4′ to 4′11.″	5′ to 5′11.″	6′ to 6′11.″	7′ to 7′11.″	8′ to 8′11.″	9′ to 9′11.″	10′ and over.	
III ..	305—325	Garjan ..	3	4	1	1	1	..	..	..	10
		Jam ..	2	..	..	..	..	..	..	..	2
		D Class ..	..	4	2	2	..	1	..	..	9
		Total ..	..	..	..	..	..	..	..	..	21
IV ..	326—359	Garjan ..	4	6	1	1	1	..	..	..	13
		Chapalish ..	..	..	1	..	..	..	..	..	1
		Jam ..	2	1	..	1	..	..	..	..	4
		Kurai ..	1	1	2	1	..	..	..	..	5
		D Class ..	1	6	1	3	..	..	..	..	11
		Total ..	..	..	..	..	..	..	..	..	34
V ..	360—368	Garjan ..	1	..	2	..	..	..	..	..	3
		Telsur ..	..	..	1	..	..	..	..	..	1
		Jam ..	..	1	1	..	..	..	..	..	2
		D Class ..	1	..	2	..	..	..	..	..	3
		Total ..	..	..	..	..	..	..	..	..	9

Garjania Range.

Idgar Selection Felling Coupe of 1936-37.

I	1 to 124 & 127 to 153, 159 & 160.	Boitha Garjan (sound) ..	3	..	4	2	5	7	8	5	34
		Boitha Garjan (partly sound)	..	..	..	..	..	..	..	2	2
		Chundul (sound) ..	..	..	..	..	10	4	1	11	26
		Jiol Bhadi (sound) ..	..	..	1	1	..	..	..	..	2
		Boiham (sound)	..	..	..	..	..	2	2	..	4
		Chapalish (sound) ..	..	..	1	..	2	1	..	..	4
		Chapalish (partlysound) ..	..	..	..	1	1	..	..	..	2
		Khair Jam (sound) ..	..	..	..	..	..	..	..	1	1
		Khair Jam (partly sound) ..	..	..	..	1	..	..	..	1	2
		Dhaki Jam (sound) ..	1	1	..	1	6	4	1	..	14
		Misc. Jam (sound) ..	..	1	1	1	..	..	..	1	4
		Misc. Jam(partly sound) ..	..	..	..	..	..	1	..	..	1
		Bandarhola (sound) ..	..	..	..	1	1	1	..	2	5
		Telsur (sound)	1	..	..	..	..	..	..	..	1
		Telsur (partly sound) ..	..	..	..	..	..	..	..	1	1
		Silbatna (sound) ..	..	..	..	1	4	..	..	..	5
		Uriam (sound)	..	..	..	..	2	4	1	4	11
		Uriam (partly sound) ..	..	..	..	1	..	..	..	..	1
		Pitraj (sound)	..	..	..	1	..	1	..	..	2
		Jhunka Bhadi (sound) ..	..	..	..	2	5	5	1	2	15
		Simul (sound)	..	..	..	..	..	..	..	1	1
		Gutgutya (sound) ..	..	..	..	..	1	..	..	..	1
		Narikel (sound) ..	..	..	..	1	..	..	2	2	5
		Narikel (partly sound) ..	..	..	..	..	..	1	..	..	1
		Tali (sound)	..	..	..	1	..	..	..	..	1
		Surujbad (sound) ..	..	..	..	..	1	..	..	..	1
		Haritaki (sound) ..	..	..	..	..	..	..	1	..	1
		Dharmara (sound) ..	..	..	..	1	..	..	..	..	1
		D. Class (sound) ..	..	..	..	2	1	..	..	..	3
		Moos (sound)	..	..	1	..	..	..	..	..	1
		Total ..	5	2	8	18	39	31	17	33	153

Idgar Block Selection Felling Coupe of 1936-37.

Section No.	Serial No. of trees.	Species.	B. H. girth classes.								Total.
			3′ to 3′11″	4′ to 4′ 11″	5′ to 5′ 11.	6′ to 6′11″	7′ to 7′11″	8′ to 8′11″	9′ to 9′11″	10′ and over.	
II	125, 126, 154 to 158 & 161 to 417.	Boitha Garjan (sound) ..	6	11	20	12	10	15	12	62	148
		Boitha Garjan (partly sound)	..	..	1	1	1	2	..	3	8
		Boilam (sound)	..	..	1	1	1	..	1	2	6
		Boilam (partly sound) ..	..	1	..	..	..	1	1	1	4
		Khair Jam (sound) ..	..	3	1	2	3	3	..	2	14
		Khair Jam (partly sound) ..	..	1	2	2	2	..	1	..	8
		Dhaki Jam (sound) ..	..	..	1	3	2	4	1	..	11
		Dhaki Jam (partly sound) ..	..	1	2	5	..	3	2	..	13
		Misc. Jam (sound) ..	1	1	8	4	4	2	..	1	21
		Chapalish (sound) ..	..	..	..	..	..	1	..	1	2
		Chapalish (partly sound) ..	..	..	..	..	1	..	..	1	2
		Pitraj (sound)	..	..	..	2	1	..	..	..	3
		Narikel (sound) ..	..	..	2	3	4	3	1	1	14
		Narikel (partly sound) ..	..	..	..	..	1	..	..	..	1
		Kamdeb (sound) ..	..	..	..	1	..	..	..	..	1
		Tejbahal (sound) ..	..	..	1	..	..	1	..	..	2
		Tali (sound)	..	..	..	1	..	..	..	..	1
		Tali (partly sound) ..	..	..	..	1	..	..	..	..	1
		Jhumka Bhadi (sound) ..	..	1	..	..	..	..	..	..	1
		Haritaki (sound) ..	..	..	..	1	..	..	..	..	1
		Chundul (sound) ..	..	..	..	..	..	..	..	4	4
		Uriam (sound)	..	..	..	..	2	3	4	5	14
		Silbatna (sound) ..	..	..	..	1	1	5	..	..	7
		D. Class (sound) ..	..	..	1	1	2	1	..	2	7
		Total ..	7	19	40	41	35	44	23	85	294

Bhomariaghona Clear Felling Coupe of 1936-37 (Mechuakhali Block).

I	1—440	Boitha Garjan (sound) ..	93	87	37	14	6	4	1	1	243
		Boitha Garjan (partly sound)	..	..	..	1	..	..	1	..	2
		Boilam (sound)	7	6	2	1	..	..	..	..	16
		Boilam (partly sound) ..	1	..	..	..	..	..	..	..	1
		Kamdeb (sound) ..	1	2	3	1	..	..	..	..	7
		Khair Jam (sound) ..	..	1	2	..	..	..	..	..	3
		Khair Jam (partly sound) ..	..	1	1	2	1	1	..	1	7
		Misc. Jam (sound) ..	26	22	8	2	1	..	..	..	59
		Misc. Jam (partly sound)	1	1	1	1	..	..	..	..	4
		Telsur (sound) ..	1	..	1	..	..	..	..	..	2
		Narikel (sound) ..	3	1	..	..	..	..	..	..	4
		Tejbahal (sound) ..	4	1	..	..	..	..	..	..	5
		Silbatna (sound) ..	5	4	2	1	1	..	..	1	14
		Silbatna (partly sound) ..	..	..	..	1	..	..	..	..	1
		Uriam (sound)	11	8	3	..	2	1	..	..	25
		Haritaki (sound) ..	2	1	..	..	..	..	..	..	3
		Chundul (sound) ..	6	6	3	..	2	1	..	..	18
		D. Class (sound) ..	13	6	6	..	..	..	..	..	25
		D. Class (partly sound) ..	..	1	..	..	..	..	..	..	1
		Total ..	174	148	69	24	13	7	2	3	440

Pole trees.

Description.			1′ to 1′ 11″	2′ to 2′ 11″.	Total.
B Class	..	..	97	..	97
B Class	..	..	..	79	79
C Class	..	..	112	..	112
C Class	..	..	..	69	69
D Class	..	..	233	..	233
D Class	..	..	..	105	105
	Total	..	442	253	695

Khuntakhali Selection Felling Coupe of 1936-37.

Section No.	Serial No. of trees.	Species.	B. H. girth classes.								Total.
			3′ to 3′11″.	4′ to 4′11″.	5′ to 5′11″.	6′ to 6′11″.	7′ to 7′11″.	8′ to 8′11″.	9′ to 9′11″.	10′ and over.	
I ..	1—114 and 359, 360.	Boitha Garjan (sound) ..	2	1	6	2	20	12	6	7	56
		Boitha Garjan (partly sound)	..	1	1	1	4	2	..	..	9
		Khair Jam (sound) ..	..	..	2	1	..	..	1	..	4
		Khair Jam (partly sound) ..	..	..	2	1	3	..	..	..	6
		Dhaki Jam (sound) ..	..	1	3	3	1	1	..	..	9
		Misc. Jam (partly sound) ..	..	..	1	1	1	..	..	..	3
		Boilam (sound) ..	..	1	..	2	3	..	..	..	6
		Boilam (partly sound) ..	..	..	..	..	1	1	1	..	3
		Kamdeb (sound) ..	..	..	..	1	..	..	..	..	1
		Silbatna (sound) ..	..	..	1	1	..	..	..	..	2
		Uriam (sound) ..	..	..	..	3	1	1	..	..	5
		Chundul (sound) ..	..	..	1	2	3	2	3	..	11
		Chundul (partly sound) ..	..	..	..	..	..	1	..	..	1
		Total ..	2	4	16	19	37	20	11	7	116
II ..	115—261	Boitha Garjan (sound) ..	6	11	14	8	23	11	6	2	81
		Boitha Garjan (partly sound)	1	..	..	..	2	1	..	3	7
		Boilam (sound) ..	1	2	2	1	2	..	..	..	8
		Kamdeb (sound) ..	1	..	2	..	..	..	..	..	3
		Khair Jam (sound) ..	1	2	..	..	..	..	1	..	4
		Khair Jam (partly sound) ..	..	1	2	2	3	..	1	..	9
		Dhaki Jam	..	..	..	3	1	..	..	..	4
		Misc. Jam (sound) ..	..	1	1	1	..	..	..	..	3
		Misc. Jam (partly sound) ..	..	..	..	1	..	..	..	..	1
		Telsur (sound) ..	1	..	..	..	..	..	..	..	1
		Tejbahal (sound) ..	..	..	..	1	..	..	..	..	1
		Arjan (sound)	..	..	..	1	1	..	..	..	2
		Arsal (sound)	..	..	..	1	..	..	..	..	1
		Chundul (sound) ..	..	..	1	3	4	2	..	2	12
		Chundul (partly sound) ..	..	..	..	..	..	2	..	..	2
		Uriam (sound) ..	..	..	..	2	2	1	1	..	6
		Silbatna (sound) ..	..	..	..	1	..	..	..	..	1
		D Class ..	..	..	..	1	..	..	..	..	1
		Total ..	11	17	22	26	38	17	9	7	147
III ..	162—258 and 361, 362.	Boitha Garjan (sound) ..	5	11	8	2	11	8	7	5	57
		Boitha Garjan (partly sound)	..	..	..	3	2	2	..	..	7
		Khair Jam (sound) ..	..	..	1	..	..	..	..	..	1
		Khair Jam (partly sound) ..	..	1	2	..	2	..	..	..	5
		Misc. Jam (sound) ..	..	1	..	4	3	..	..	..	8
		Misc. Jam (partly sound) ..	..	..	..	2	..	..	..	..	2
		Boilam (sound) ..	..	..	1	1	..	..	..	..	2
		Boilam (partly sound) ..	..	..	..	1	..	..	..	..	1
		Kamdeb (sound) ..	..	..	1	..	..	..	..	..	1
		Silbatna (sound ..	..	..	..	1	..	1	..	..	2
		Chundul (sound) ..	..	1	1	..	2	1	2	..	7
		Chundul (partly sound) ..	..	..	..	..	..	1	..	..	1
		Uriam (sound) ..	..	..	..	3	1	1	..	..	5
		Total ..	5	14	14	17	21	14	9	5	99

Ringbhong A. Selection Felling Coupe of 1936-37.

I ..	1—88 and 110, 111.	Dhulia Garjan (sound) ..	..	2	6	6	12	9	4	1	40
		Dhulia Garjan (partly sound)	..	..	1	..	..	..	2	4	7
		Chapalish (sound) ..	..	..	..	..	..	1		..	1
		Chapalish (partly sound) ..	..	..	..	..	..	1	..	..	1
		Jarul (sound) ..	..	..	..	..	1	..		..	1
		Misc. Jam (sound) ..	..	2	2	10	2	3	..	1	20
		Misc. Jam (partly sound) ..	..	..	..	1	..	..	..	..	1
		Karoi (sound)	..	..	..	2	..	..	..	..	2
		Hargoja (sound) ..	1	..	..	2	..	..	..	..	3
		Hargoja (partly sound) ..	..	..	..	..	1	..	..	..	1
		Simul (sound)	..	..	..	..	..	1	..	..	1
		Uriam (sound)	..	..	..	1	3	1	..	..	5
		Kom (Sound)	..	1	1	..	..		..	..	2
		Dharmara (sound)	..	..	..	..	1	..	..	..	1
		Jiol Bhadi (sound) ..	..	..	..	1	..	..	..	..	1
		Chundul (sound) ..	..	..	..	1	1	..	..	..	2
		Moos (sound)	..	..	..	1	..	..	..	..	1
		Total ..	1	5	10	25	21	16	6	6	90

Section No.	Serial No. of trees.	Species.	B. H. girth classes								Total.
			3′ to 3′11″	4′ to 4′11″	5′ to 5′11″	6′ to 6′11″	7′ to 7′11″	8′ to 8′11″	9′ to 9′11″	10′ and over.	
II ..	89 109 and 112 273.	Dhulya Garjan (sound) ..	3	9	7	8	31	9	8	4	79
		Dhulya Garjan (partly sound)	..	2	1	2	3	..	2	..	10
		Chapalish (sound) ..	..	..	..	1	1	1	..	..	3
		Chapalish (partly sound) ..	..	..	..	1	..	..	2	..	3
		Telsur (sound)	..	..	..	..	..	..	1	..	1
		Misc. Jam (sound) ..	2	5	12	8	5	3	..	..	35
		Misc. Jam (partly sound) ..	..	1	1	1	..	..	..	..	3
		Dhaki Jam (sound) ..	..	..	..	1	..	..	1	..	2
		Karoi (sound)	..	..	..	1	2	1	..	..	4
		Jiol Bhadi (sound) ..	..	..	1	..	4	1	..	..	6
		Moos (sound)	..	..	1	2	..	..	..	..	3
		Uraam (sound) .	..	..	1	2	2	1	..	..	6
		Uraam (partly sound) ..	..	..	1	..	..	..	..	..	1
		Hargoja (sound) ..	..	3	1	2	..	..	..	..	6
		Hargoja (partly sound) ..	..	..	..	1	..	..	..	..	1
		Jarul (unsound)	..	1	..	..	..	1	..	..	2
		Arsol (unsound) ..	..	1	1	4	4	..	..	..	10
		Korn (sound) . ..	2	1	1	..	..	..	..	..	4
		Dharmara (sound) ..	..	..	..	3	..	..	..	..	3
		Simul (sound)	..	..	..	..	..	..	..	1	1
		Total .	7	23	28	37	52	17	14	5	183

Conditions of sale.

1. The Divisional Forest Officer is not bound to accept the highest or any offer for any lot.

2. Successful bidders shall immediately deposit as earnest money one-tenth of the total bid in treasury chalan, which will be returned if the sale is not confirmed and will be retained as security deposit if the sale is confirmed.

3. Purchasers will be required to sign agreements in printed forms for outright sales. Copy of this form may be seen at the Divisional Forest Office, Chittagong, and at the Range Offices.

4. The following are among the conditions of the agreements for all lots of the sale :—

(1) Felling and extraction to be completed by the 31st May 1937 for the selection felling coupes and 15th March 1937 for the clear felling and coppice coupes.

(2) The purchase price is to be paid in equal instalments as follows :—

	Selection Felling Coupes.	Clear Felling and Coppice Coupes.
1st instalment ..	1st November 1936 ..	1st November 1936.
2nd instalment ..	2nd January 1937 ..	2nd January 1937.
3rd instalment ..	1st February 1937 ..	1st February 1937.
4th instalment ..	1st March 1937 ..	....

5. Failure to sign the agreement within one month of confirmation of sale will render the purchaser liable to forfeiture of his security deposit.

The lot or lots so affected shall be re-sold by public auction or otherwise as the Divisional Forest Officer may think fit and the defaulting purchasers shall be liable to make good any shortage on such re-sale.

6. "D" Class poles used for saw-benches will not be charged for unless removed. They must, however, be marked by a Forest Officer before felling, and if removed, will be charged for at schedule rates. (This will not apply to clear felling coupes.)

N. PAL,
Divisional Forest Officer,
Chittagong Division.

Chittagong, the 25th July 1936.

SALE NOTICE.

In the Court of the Munsif of Boalia, Rajshahi.

Re MONEY EXECUTION CASE No. 138 of 1936.

Hira Lal Ghosh, decree-holder,

versus

Sayed Sha Mahammad Abdul Hapiz, judgment-debtor.

NOTICE is hereby given that the property mentioned in the schedule below will be sold on the 6th day of October 1936, at 12 noon, by the Nazir of the District Judge, Rajshahi, for Rs. 590-4-6 due to the above decree-holder from the judgment-debtor under order of the Munsif at Boalia:—

Schedule.

Lot 1. 6 annas 19 gandas $12\frac{95}{73}$ danti Zamindari right of the judgment-debtor in pargana Mahamadpur Dihi Puthia Tatiarpara, appertaining to tauzi No. 2281 of the Rajshahi Collectorate within police-stations Boalia, Paba, Tanore and Godagari. Revenue for the entire estate is Rs. 715-13.

[ILLEGIBLE], Munsif.

Rajshahi, the 25th August 1936. (1762—1)

In the 2nd Court of the Sadar Munsif at Dinajpur.

MONEY EXECUTION CASE No. 153 OF 1936.

Gangajal Pandit of Dinajpur town, decree-holder,

versus

Niroda Sundari Choudhurani of Dinajpur town, judgment-debtor.

Claim—Rs. 2,192-12-9p.

THE 8 annas share of lot Parbatipur, police-station Parbatipur, pargana Hasia Bangalipur, mauzas Parbatipur and others, bearing tauzi No. 458 of the Dinajpur Collectorate, the annual revenue of the entire estate being Rs. 1,625-13-3, will be sold in auction by the Nazir of the District Judge at 12 noon on 5th October 1936. The property is under mortgage to one Surajmall Beharilal of Parbatipur.

The approximate value of the property is Rs, 2,500.

B. B. MUKHERJEE, Munsif.

Dinajpur, the 29th August 1936. (1810—1)

NOTIFICATION OF SALE.

In the Court of the Addl. Sub-Judge of Nadia.

TITLE EXN. CASE No. 23 OF 1936.

Harendra Krishna Dey and another, decree-holders,

versus

Jnanendra Mohon Bhaduri and another, judgment-debtors.

NOTICE is hereby given that the property mentioned below belonging to the judgment-debtors will be sold in auction on the 3rd October 1936, by the Nazir of the District Judge's Court, Nadia. The right, title and interest of the judgment-debtor in tauzi No. 399/34 of the Nadia Collectorate, their share in it being 12 gandas 2 kranta. The revenue payable for it is Rs. 2,337-14-1p., Police Cess is Rs. 12-6-4 pies, and cesses are Rs. 989-9.

B. B. CHATTERJEE, Addl. Sub-Judge.

Krishnagar, the 27th August 1936. (1806—1)

In the Court of the Sub-Judge at Dinajpur.

O.C. EXECUTION CASE No. 57 OF 1936.

Tarekeswar Chatterjee, decree-holder

versus

Rajanikanta Banerjee, judgment-debtor.

Date of sale—5th October 1936, at 12 noon.

THE right, title and interest of judgment-debtor in the following revenue-paying property, namely, his eight annas share, will be sold in the above execution case on the date fixed:—

Tauzi No. 216 of the Dinajpur Collectorate, lot Govindapur, police-station Khansama, pargana Punjra, villages Govindapur and others. Land revenue of whole estate is Rs. 4,083-12-3 p.

K. B. SEN, Sub-Judge.

Dinajpur, the 24th August 1936. (1755—1)

In the High Court of Judicature at Fort William in Bengal, in insolvency.

NOTICE OF ADJUDICATION ORDER.

No. 104 OF 1936.

Re Ahmed Mohammed Paruk, carrying on business and personally working for gain, at No. 22, Canning Street, in the town of Calcutta. Ex parte the creditor.

Messrs. Mitter & Baral, creditor's solicitors.

ON the 12th day of August 1936, an order was made by the High Court of Judicature at Fort William in Bengal in its insolvency jurisdiction adjudging the abovenamed as an insolvent.

Note.—All debts due to the estate should be paid to me.

Dated this 27th day of August 1936.

G. M. FALKNER, Official Assignee.

In the High Court of Judicature at Fort William in Bengal, in insolvency.

NOTICE OF ADJUDICATION ORDER.

No. 111 of 1936.

Re Champalal Surana, now of no occupation, residing at No. 2, Synagogue Street, in the town of Calcutta, and lately residing at and carrying on business as dealer in grain and Kurana and as agent for sale of petrol in co-partnership with Manack Chand Surana, under the name, style and firm of Manack Chand Champalal at Bander Bazar Mohalla Kalighat, Sylhet Station, Sylhet Sadar, in the province of Assam, ex parte the debtor.

M. G. Poddar, debtor's solicitor.

ON the 18th day of August 1936, an order was made by the High Court of Judicature at Fort William in Bengal in its insolvency jurisdiction adjudging the abovenamed as an insolvent.

Note.—All debts due to the estate should be paid to me.

Dated this 25th day of August 1936.

G. M. FALKNER, Official Assignee.

In the High Court of Judicature at Fort William in Bengal, in Insolvency.

NOTICE OF ADJUDICATION ORDER.

No. 112 OF 1936.

Re Chaturbhuj Sarma, lately residing at No. 8, Shyamabhai Gully Lane, at present residing at No. 3, Doyahata Street, in the town of Calcutta, a broker in rice, ex parte the debtor in person.

ON the 20th day of August 1936 an order was made by the High Court of Judicature at Fort William in Bengal in its insolvency jurisdiction adjudging the abovenamed as an insolvent.

Note.—All debts due to the estate should be paid to me.

Dated this 26th day of August 1936.

G. M. FALKNER, Official Assignee.

In the High Court of Judicature at Fort William in Bengal, in Insolvency.

NOTICE OF ADJUDICATION ORDER.

No. 116 of 1936.

Re Philip Louis Wilhelm Klier alias L. Clear, residing at No. P/233, Park Circus, in the suburbs of Calcutta, having been employed in a photographic business carried on at No. 10, Hungerford Street, in the town of Calcutta, and thereafter working for gain as a salesman on commission in Calcutta aforesaid, ex parte the debtor in person.

ON the 24th day of August 1936 an order was made by the High Court of Judicature at Fort William in Bengal in its insolvency jurisdiction adjudging the abovenamed as an insolvent.

Note.—All debts due to the estate should be paid to me.

Dated this 28th day of August 1936.

G. M. FALKNER, Official Assignee.

In the High Court of Judicature at Fort William in Bengal, in Insolvency.

NOTICE OF ADJUDICATION ORDER.

No. 117 OF 1936.

Re Paresh Nath Dey of no occupation, residing at No. 50, Strand Road, in the town of Calcutta, lately residing and carrying on business in oil at No. A/6, Jagannath Ghat, in Calcutta aforesaid, ex parte the debtor.

S. M. Chowdhuri, debtor's solicitor.

ON the 25th day of August 1936 an order was made by the High Court of Judicature at Fort William in Bengal in its insolvency jurisdiction adjudging the abovenamed as an insolvent.

Note.—All debts due to the estate should be paid to me.

Dated this 28th day of August 1936.

G. M. FALKNER, Official Assignee.

In the High Court of Judicature at Fort William in Bengal, in Insolvency.

NOTICE OF ADJUDICATION ORDER.

No. 118 of 1936.

Re Haji Hafiz Allabux, lately carrying on business in provisions and oilman stores under the name and style of New Zealand Stores Agency at No. 73, Free School Street, and also in fish at No. 11, Colootolla Street, and at present carrying on business in leasehold immovable properties in Calcutta at No. 11, Colootolla Street and residing at No. 78, Colootolla Street, in the town of Calcutta, ex parte the debtor.

S. K. Mukherji, debtor's solicitor.

ON the 25th day of August 1936 an order was made by the High Court of Judicature at Fort William in Bengal in its insolvency jurisdiction adjudging the abovenamed as an insolvent.

Note.—All debts due to the estate should be paid to me.

Dated this 28th day of August 1936.

G. M. FALKNER, Official Assignee.

In the High Court of Judicature at Fort William in Bengal, in Insolvency.

NOTICE OF ADJUDICATION ORDER.

No. 119 of 1936.

Re Hridaynath Roy Chaudhury, residing at No. 5, Beniapukur Lane, in the suburbs of Calcutta, and working for gain as a telegraphist in the Central Telegraph Office at No. 8, Wellesley Place, in the town of Calcutta, ex parte the debtor in person.

ON the 25th day of August 1936 an order was made by the High Court of Judicature at Fort William in Bengal in its insolvency jurisdiction adjudging the abovenamed as an insolvent.

Note.—All debts due to the estate should be paid to me.

Dated this 28th day of August 1936.

G. M. FALKNER, Official Assignee.

In the High Court of Judicature at Fort William in Bengal, in Insolvency.

NOTICE is hereby given that dividends as noted below have been declared and will be paid to the creditors on application to the undersigned with documents in support :—

(1) No. 77 of 1933.

Re Estate Owen Sinclair Jones—1st dividend at Rs. 20 per cent.

(2) No. 118 of 1933.

Re Estate Harold Johnson—1st dividend at Rs. 25 per cent.

(3) No. 190 of 1933.

Re Estate A. W. Woodward—1st dividend at Rs. 6 per cent.

(4) No. 34 of 1934.

Re Estate Charles Joseph Roberts—1st dividend at Rs. 15 per cent.

(5) No. 38 of 1934.

Re Estate J. W. Counter—1st dividend at Rs. 6 per cent.

(6) No. 56 of 1934.

Re Estate A. M. Lilley—1st dividend at Rs. 15 per cent.

(7) No. 62 of 1934.

Re Estate Denzil Melville Smith—1st dividend at Rs. 10 per cent.

G. M. FALKNER, Official Assignee.

10, Old Post Office Street, Calcutta, the 27th August 1936.

In the Court of the Sub-Judge at Asansol.

INSOLVENCY CASE No. 54 OF 1934.

G. A. Daring of Asansol, insolvent.

TAKE notice that the aforesaid insolvent has filed an application on 23rd May 1936 for discharge and that the Court has fixed 18th September 1936 for hearing thereof.

K. BANERJI, Sub-Judge.

Asansol, the 24th August 1936.

(1799—1)

In the Court of the Sub-Judge at Asansol.

INSOLVENCY CASE No. 12 OF 1935.

Thaka Hari De of Asansol, insolvent.

TAKE notice that the aforesaid insolvent has filed an application on 10th August 1936 for discharge and that the Court has fixed 11th September 1936 for hearing thereof.

K. BANERJI, Sub-Judge.

Asansol, the 24th August 1936.

(1800—1)

In the Court of the Sub-Judge at Asansol.

INSOLVENCY CASE No. 16 OF 1935.

M. Callaghan of Asansol, insolvent.

TAKE notice that the aforesaid insolvent has filed an application on 28th July 1936 for discharge and that the Court has fixed 4th September 1936, for hearing thereof.

K. BANERJI, Sub-Judge.

Asansol, the 24th August 1936. (1801—1)

In the Court of the Sub-Judge at Asansol.

INSOLVENCY CASE No. 11 OF 1936.

F. G. Date of Asansol, petitioner.

TAKE notice that the petitioner aforesaid has been adjudged an insolvent on 17th July 1936, and that he has been directed to apply for his discharge within one year from the said date.

K. BANERJI, Sub-Judge.

Asansol, the 24th August 1936. (1802—1)

In the Court of the Sub-Judge at Asansol.

INSOLVENCY CASE No. 16 OF 1936.

Nanku Hari of Budhadanga, Asansol, petitioner.

NOTICE is hereby given that the abovenamed petitioner has been adjudged insolvent on 7th August 1936, and that he has been directed to apply for his discharge within six months from that day.

K. BANERJI, Sub-Judge.

Asansol, the 24th August 1936. (1803—1)

In the Court of the Sub-Judge at Asansol.

INSOLVENCY CASE No. 17 OF 1936.

Naba Krishna Pazi of Bamunara, police-station Kanksha, petitioner.

NOTICE is hereby given that the abovenamed petitioner has been adjudged insolvent on 14th August 1936, and that he has been directed to apply for his discharge within six months from that day.

K. BANERJI, Sub-Judge.

Asansol, the 24th August 1936. (1804—1)

In the Court of the District Judge of Bakarganj.

INSOLVENCY CASE No. 11 OF 1936.

NOTICE is hereby given that the firm of Kunja Behari Pal, Raj Mohan Majumdar, Radhika Lal Pal, carrying on business at Maharajganj, police-station Jhalakati, district Bakarganj, creditor-petitioner, has applied for an order of adjudication under provision of section 9 of the Insolvency Act, V of 1920, against Brajendra Lal, Rajendra Lal, Kushi Gopal and Satish Chandra Kunda, sons of late Lal Behari Kunda, of Darjipara Gharishar, police-station Naria, district Faridpur, at present carrying on joint business in the name and style of Brajendra Lal Kunda and brothers at Dautala, police-station Bamna, district Bakarganj, debtors, and that the 4th September 1936 has been fixed for hearing the petition.

A. N. SEN, District Judge.

Barisal, the 24th August 1936.

(1795—1)

NOTICE TO CREDITORS OF THE DATE OF HEARING OF AN INSOLVENCY PETITION.

Section 19 of the Provincial Insolvency Act, V of 1920.

In the Court of the District Judge at Chittagong.

INSOLVENCY APPLICATION No. 27 OF 1936.

WHEREAS debtor, Ganesh Chandra Biswas, son of late Pran Krishna Biswas, of Bathua, police-station Hathazari, district Chittagong, has applied to this Court, by a petition, dated 21st day of July 1936, to be declared an insolvent under the Provincial Insolvency Act, V of 1920, and this is to give notice that the Court has fixed the 22nd day of September 1936, for the hearing of the aforesaid petition and the examination of the debtor.

H. G. WAIGHT, District Judge.

Chittagong, the 24th August 1936. (1805—1)

In the Court of the District Judge of Dinajpur.

INSOLVENCY CASE No. 21 OF 1936.

(1) Pasharuddin Sarker, (2) Namiruddin Mohammed and (3) Amiruddin Mohammed, sons of late Sola Mohammed, of village Subrah, police-station Kotwali, district Dinajpur, have applied to this Court to be adjudged insolvents.

The 24th day of September 1936 has been fixed for hearing their application at Dinajpur

K. B. SEN, *for* District Judge.

Dinajpur, the 27th August 1936. (1808—1)

In the Court of the District Judge of Faridpur.

INSOLVENCY CASE No. 91 OF 1936.

(1) Abinasi Chandra Saha and (2) Rasik Lal Saha, sons of late Chandra Kumar Saha, of Talma, police-station Nagarkanda, district Faridpur, creditor-petitioners

versus

(1) Hara Lal Saha, son of late Nil Mani Saha, of Krishnadangi, called Gazaria, police-station Kotwali, district Faridpur, debtor, opposite party.

NOTICE is hereby given that the abovenamed creditor-petitioners have applied to this Court to have the debtor, opposite party, adjudged insolvent and that the 15th September 1936 has been fixed for the hearing of the application.

K. B. ROY, District Judge.

Faridpur, the 24th August 1936. (1754—1)

In the Court of the District Judge of Hooghly.

NOTICE is hereby given, under clause (2) of section 12 of the Provincial Insolvency Act, V of 1920, to his creditors that the insolvency petition of Fanindra Nath Sur, son of late Dinanath Sur, of Bhadreswar, thana Bhadreswar, district Hooghly, has been admitted by this Court as No. 70 of 1936 and that the 26th September 1936 has been fixed for the hearing thereof.

[ILLEGIBLE], for District Judge.

Chinsura, the 25th August 1936.

(1797—1)

ORDER ANNULLING ADJUDICATION.

In the Court of the District Judge of Midnapore.

INSOLVENCY CASE No. 57 OF 1936.

Sarbeswar Panigrahi, son of late Krishna Mohan Panigrahi, of Ghatua, pargana Keoramal, thana Contai, district Midnapore, debtor.

WHEREAS the abovenamed debtor was adjudicated an insolvent by order of the Court, dated 1st day of August 1936, on the application of the creditors Gopinath Pradhan and another, and whereas the creditors have not deposited the publication costs of the order of adjudication:

It is ordered that the order of adjudication, dated 1st August 1936, against the abovenamed debtor be and the same is hereby annulled.

Dated this 22nd day of August 1936.

S. K. HALDAR, District Judge.

In the Court of the District Judge of Mymensingh.

INSOLVENCY CASE No. 25 OF 1935.

ON the application of the insolvent Prakash Chandra Banik, son of late Ramdhan Banik, of Purura, police-station Katiadi, district Mymensingh, for an order of the final discharge, the 26th day of September 1936 has been fixed for hearing the aforesaid petition and the examination of the insolvent.

S. M. MASIH, District Judge.

Mymensingh, the 29th August 1936.

(1814—1)

In the Court of the District Judge of Mymensingh.

INSOLVENCY CASE No. 25 OF 1936.

Shib Ratan Lal Tewari, creditor-petitioner,

versus

Lalu Prasad Tewari, debtor, opposite party.

ON the application of Shib Ratan Lal Tewari, a creditor, against his debtor Lalu Prasad Tewari, son of late Munnalal Tewari, residing at Khalbola Bazar, police-station Iswarganj, district Mymensingh, for adjudicating the said debtor an insolvent, notice is hereby given to all his creditors that the said petition has been admitted by this Court, and that the 26th day of September 1936 has been fixed for hearing the case.

S. M. MASIH, District Judge.

Mymensingh, the 29th August 1936.

(1815—1)

ORDER OF ADJUDICATION.

Section 27 of the Provincial Insolvency Act, V of 1920.

In the Court of the District Judge of Pabna-Bogra.

INSOLVENCY CASE No. 6 OF 1936.

NOTICE is hereby given that petitioning debtor Jogendra Nath Saha, son of late Krishna Hari Saha, of Himaitpur, police-station Himaitpur, district Pabna, was on the 27th day of April 1936 adjudged an insolvent, and directed to apply for final discharge within a year.

S. N. MODAK, District Judge.

Pabna, the 24th August 1936. (1760—1)

In the Court of the District Judge of Pabna-Bogra.

INSOLVENCY CASE No. 18 OF 1936.

WHEREAS Brojanath Sarkar, son of late Mathuranath Sarkar, of Fulbari, police-station Santhia, district Pabna, has applied to this Court by a petition, dated 14th August 1936, to be declared an insolvent, this is to give notice to all his creditors that the Court has fixed the 15th September 1936 for hearing of the aforesaid application and for examination of the debtor.

S. N. MODAK, District Judge.

Pabna, the 24th August 1936. (1761—1)

In the Court of the District Judge of Pabna-Bogra.

INSOLVENCY CASES Nos. 19, 20 AND 21 OF 1936.

WHEREAS Radha Charan Das, Satish Chandra Das and Radha Raman Das, sons of late Ram Tanu Das, of Salgaria, police-station and district Pabna, have applied to this Court to be declared insolvents, this is to give notice to all their creditors that the Court has fixed the 25th September 1936 for hearing of the aforesaid applications and for examination of the debtors.

S. N. MODAK, District Judge.

Pabna, the 26th August 1936.

(1807—1)

In the Court of the District Judge of 24-Parganas.

INSOLVENCY CASE No. 28 OF 1936.

E. B. H. Lord of 233, Lower Circular Road, police-station Ballygunj, 24-Parganas, applicant.

To Pilani Properties, Ltd., of 8, Royal Exchange Place, Calcutta, and others, creditors.

ON the 20th day of August 1936 it was ordered that the matter of the petition of the applicant be heard on the 21st day of September 1936, and that the said applicant do attend to be examined by this Court on that date.

T. H. ELLIS, District Judge.

Alipore, the 22nd August 1936. (1753—1)

In the Court of the District Judge of 24-Parganas.

INSOLVENCY CASE No. 29 OF 1936.

Srinath Sing of 84/2, Chetla Road, police-station Alipore, 24-Parganas, applicant.

To Messrs. Jata Sankar and Hari Sankar, a firm of Shalimar Coal Depot, Howrah, and others, creditors.

ON the 27th day of August 1936 it was ordered that the matter of the petition of the applicant be heard on the 28th day of September 1936, and that the said applicant do attend to be examined by this Court on that date.

T. H. ELLIS, District Judge.

Alipore, the 28th August 1936. (1816—1)

In the 4th Court of the Sub-Judge of 24-Parganas.

INSOLVENCY CASE No. 325 OF 1936.

Ramdeo Bhar of Jagaddal, police-station Jagaddal, 24-Parganas, applicant.

To Dhora Parshi of Jagaddal, police-station Jagaddal, 24-Parganas and others, creditors.

ON the 5th day of August 1936 it was ordered that the matter of the petition of the applicant be heard on the 21st day of September 1936, and that the said applicant do attend to be examined by this Court on that date.

S. P. BOSE, Sub-Judge.

Alipore, the 19th August 1936. (1764—1)

In the 4th Court of the Sub-Judge of 24-Parganas.

INSOLVENCY CASE No. 341 OF 1936.

Hasmatullya Khan of 41, Nazir Lane, police-station Watgunj, 24-Parganas, applicant.

To Chhakowri Prosad of 50, Watgunj Street, Calcutta, and others, creditors.

ON the 8th day of August 1936 it was ordered that the matter of the petition of the applicant be heard on the 28th day of September 1936, and that the said applicant do attend to be examined by this Court on that date.

S. P. BOSE, Sub-Judge.

Alipore, the 19th August 1936. (1765—1)

In the 4th Court of the Sub-Judge of 24-Parganas.

INSOLVENCY CASE No. 348 OF 1936.

Gaya Prasad Pathak of 76/111, Cossipore, 24-Parganas, applicant.

To Narsingdas Agarwala of 26, Garanhatta Street, Calcutta, and others, creditors.

ON the 20th day of August 1936 it was ordered that the matter of the petition of the applicant be heard on the 5th day of October 1936, and that the said applicant do attend to be examined by this Court on that date.

[ILLEGIBLE], Sub-Judge.

Alipore, the 24th August 1936. (1766—1)

In the 4th Court of the Sub-Judge of 24-Parganas.

INSOLVENCY CASE No. 349 OF 1936.

Surendranath Banerjee of 16, Nazir Lane, police-station Watgunj, 24-Parganas, applicant.

To Kristo Chandra Chandra of 5, Michael Dutt Street, Calcutta, and others, creditors.

ON the 12th day of August 1936 it was ordered that the matter of the petition of the applicant be heard on the 28th day of September 1936, and that the said applicant do attend to be examined by this Court on that date.

S. P. BOSE, Sub-Judge.

Alipore, the 19th August 1936. (1767—1)

In the 4th Court of the Sub-Judge of 24-Parganas.

INSOLVENCY CASE No. 360 OF 1936.

Krishna Chandra Pratihar alias Porel of 47, Christopher Road, police-station Entally, 24-Parganas, applicant.

To Satya Charan Kundu of 1, Dehi Serampore Road, Entally, 24-Parganas, and others, creditors.

ON the 12th day of August 1936 it was ordered that the matter of the petition of the applicant be heard on the 28th day of September 1936, and that the said applicant do attend to be examined by this Court on that date.

S. P. BOSE, Sub-Judge.

Alipore, the 19th August 1936. (1769—1)

In the 4th Court of the Sub-Judge of 24-Parganas.

INSOLVENCY CASE No. 361 OF 1936.

Etwari Mistry of Lakshmighat, Titagarh, 24-Parganas, applicant.

To Mukkhu Singh of Khardah, 24-Parganas, and others, creditors.

ON the 12th day of August 1936 it was ordered that the matter of the petition of the applicant be heard on the 28th day of September 1936, and that the said applicant do attend to be examined by this Court on that date.

S. P. BOSE, Sub-Judge.

Alipore, the 19th August 1936. (1770—1)

In the 4th Court of the Sub-Judge of 24-Parganas.

INSOLVENCY CASE No. 363 OF 1936.

Abdul Sattar of 10, Munshiganj Road, Kidderpore, 24-Parganas, applicant.

To Manan Khan Kabuli of Budge Budge, 24-Parganas, and others, creditors.

ON the 13th day of August 1936 it was ordered that the matter of the petition of the applicant be heard on the 28th day of September 1936, and that the said applicant do attend to be examined by this Court on that date.

S. P. BOSE, Sub-Judge.

Alipore, the 19th August 1936. (1771—1)

In the 4th Court of the Sub-Judge of 24-Parganas.

INSOLVENCY CASE No. 364 OF 1936.

Bejoy Mohan Roy of 91/2, Tollygunge Road, police-station Tollygunge, 24-Parganas, applicant.

To Shaha & Co., of 42/2, Market Street, Calcutta, and others, creditors.

ON the 13th day of August 1936 it was ordered that the matter of the petition of the applicant be heard on the 28th day of September 1936, and that the said applicant do attend to be examined by this Court on that date.

S. P. BOSE, Sub-Judge.

Alipore, the 19th August 1936. (1772—1)

In the 4th Court of the Sub-Judge of 24-Parganas.

INSOLVENCY CASE No. 367 OF 1936.

Srimotty Jasoda Methrani of 8, Moyla Depot, Mominpore, 24-Parganas, applicant.

To Abdul Khan Kabuly of Garden Reach, Metiaburuz, 24-Parganas, and others, creditors.

ON the 21st day of August 1936 it was ordered that the matter of the petition of the applicant be heard on the 5th day of October 1936, and that the said applicant do attend to be examined by this Court on that date.

[ILLEGIBLE], Sub-Judge.

Alipore, the 24th August 1936. (1773—1)

In the 4th Court of the Sub-Judge of 24-Parganas.

INSOLVENCY CASE No. 369 OF 1936.

Bideshi Chamar of Spence Road, Titagarh, 24-Parganas, applicant.

To Mahabir Halwai, Trevors Road, Titagarh, 24-Parganas, and others, creditors.

ON the 19th day of August 1936 it was ordered that the matter of the petition of the applicant be heard on the 5th day of October 1936, and that the said applicant do attend to be examined by this Court on that date.

[ILLEGIBLE], Sub-Judge.

Alipore, the 21st August 1936. (1774-1)

In the 4th Court of the Sub-Judge of 24-Parganas.

INSOLVENCY CASE No. 372 OF 1936.

Jatindranath Basu of 20, Pitambar Bhattacharjee Lane, Garpar, police-station Belliaghata, 24-Parganas, applicant.

To Hari Charan Harendralal Baishya Shaha of 106, Kalighat Road, Calcutta, and another, creditors.

ON the 21st day of August 1936 it was ordered that the matter of the petition of the applicant be heard on the 5th day of October 1936, and that the said applicant do attend to be examined by this Court on that date.

[ILLEGIBLE], Sub-Judge.

Alipore, the 24th August 1936. (1775—1)

In the 4th Court of the Sub-Judge of 24-Parganas.

INSOLVENCY CASE No. 373 OF 1936.

Sk. Golam Mostafa of Kantalberia, police-station Metiaburuz, 24-Parganas, applicant.

To Narsingdas Agarwala of 23, Garanhatta Street, Calcutta, and others, creditors.

ON the 21st day of August 1936 it was ordered that the matter of the petition of the applicant be heard on the 5th day of October 1936, and that the said applicant do attend to be examined by this Court on that date.

[ILLEGIBLE], Sub-Judge.

Alipore, the 24th August 1936. (1776—1)

In the 4th Court of the Sub-Judge of 24-Parganas.

INSOLVENCY CASE No. 351 OF 1936.

Mahabir Sha Kalwar of 242, Manicktola Main Road, Narkeldanga, 24-Parganas, applicant.

To Sremanta Ganesh Prasad Das, a firm at R. G. Kar Road, and others, creditors.

ON the 6th day of August 1936 it was ordered that the matter of the petition of the applicant be heard on the 21st day of September 1936, and that the said applicant do attend to be examined by this Court on that date.

S. P. BOSE, Sub-Judge.

Alipore, the 19th August 1936. (1768—1)

NOTICE TO CREDITORS OF APPLICATION FOR DISCHARGE.

Section 41 (1) of the Provincial Insolvency Act, V of 1920.

In the 4th Court of the Sub-Judge at Alipore.

INSOLVENCY CASE No. 287 OF 1935.

Kalooram of Diamond Harbour Road, suburb of Calcutta, 24-Parganas, applicant.

TAKE notice that the abovenamed insolvent has applied at the Court for his discharge, and that the Court has fixed the 5th day of October 1936 at 11 o'clock for hearing the application.

Dated this 24th day of August 1936.

[ILLEGIBLE], Sub-Judge.

(1777—1)

NOTICE TO CREDITORS OF APPLICATION FOR DISCHARGE.

Section 41 (1) of the Provincial Insolvency Act, V of 1920.

In the 4th Court of the Sub-Judge at Alipore.

INSOLVENCY CASE No. 372 OF 1935.

Jotindranath Kundu of 10, Mukherjeepara Lane, Kalighat, 24-Parganas, applicant.

TAKE notice that the abovenamed insolvent has applied at the Court for his discharge, and that the Court has fixed the 28th day of September 1936 at 11 o'clock for hearing the application.

Dated this 19th day of August 1936.

S. P. BOSE, Sub-Judge.

(1778—1)

NOTICE TO CREDITORS OF APPLICATION FOR DISCHARGE.

Section 41 (1) of the Provincial Insolvency Act, V of 1920.

In the 4th Court of the Sub-Judge at Alipore.

INSOLVENCY CASE No. 378 OF 1935.

Srinibas Dey of Panihati, police-station Khardah, 24-Parganas, applicant.

TAKE notice that the abovenamed insolvent has applied at the Court for his discharge, and that the Court has fixed the 28th day of September 1936 at 11 o'clock for hearing the application.

Dated this 19th day of August 1936.

S. P. BOSE, Sub-Judge.

(1779—1)

NOTICE TO CREDITORS OF APPLICATION FOR DISCHARGE.

Section 41 (1) of the Provincial Insolvency Act, V of 1920.

In the 4th Court of the Sub-Judge at Alipore.

INSOLVENCY CASE No. 478 OF 1935.

Indu Bhusan Ghosh of Tanupukur Road, Dhakuria, 24-Parganas, applicant.

TAKE notice that the abovenamed insolvent has applied at the Court for his discharge, and that the Court has fixed the 5th day of October 1936 at 11 o'clock for hearing the application.

Dated this 21st day of August 1936.

[ILLEGIBLE], Sub-Judge.

(1780—1)

NOTICE TO CREDITORS OF APPLICATION FOR DISCHARGE.

Section 41 (1) of the Provincial Insolvency Act, V of 1920.

In the 4th Court of the Sub-Judge at Alipore.

INSOLVENCY CASE No. 484 OF 1935.

S. K. Biswas of 2/2, Pottery Road, Entally, 24-Parganas, applicant.

TAKE notice that the abovenamed insolvent has applied at the Court for his discharge, and that the Court has fixed the 5th day of October 1936 at 11 o'clock for hearing the application.

Dated this 24th day of August 1936.

[ILLEGIBLE], Sub-Judge.

(1781—1)

NOTICE TO CREDITORS OF APPLICATION FOR DISCHARGE.

Section 41 (1) of the Provincial Insolvency Act, V of 1920.

In the 4th Court of the Sub-Judge at Alipore.

INSOLVENCY CASE No. 500 OF 1935.

Indra Chandra Dutta of 22, Nilmoney Mitra Road, Talla, 24-Parganas, applicant.

TAKE notice that the abovenamed insolvent has applied at the Court for his discharge, and that the Court has fixed the 5th day of October 1936 at 11 o'clock for hearing the application.

Dated the 24th day of August 1936.

[ILLEGIBLE], Sub-Judge.

(1782—1)

NOTICE TO CREDITORS OF APPLICATION FOR DISCHARGE.

Section 41 (1) of the Provincial Insolvency Act, V of 1920.

In the 4th Court of the Sub-Judge at Alipore.

INSOLVENCY CASE No. 519 OF 1935.

Mohammad Amir Hossain of Dhankheti, Garden Reach, 24-Parganas, applicant.

TAKE notice that the abovenamed insolvent has applied at the Court for his discharge, and that the Court has fixed the 5th day of October 1936 at 11 o'clock for hearing the application.

Dated this 24th day of August 1936.

[ILLEGIBLE], Sub-Judge.
(1783—1)

NOTICE TO CREDITORS OF APPLICATION FOR DISCHARGE.

Section 41 (1) of the Provincial Insolvency Act, V of 1920.

In the 4th Court of the Sub-Judge at Alipore.

INSOLVENCY CASE No. 524 OF 1935.

Mohendra Chandra Bhaumick of 30/3, Biswas Nursery Lane, Sura, Beliaghata, 24-Parganas, applicant.

TAKE notice that the abovenamed insolvent has applied at the Court for his discharge, and that the Court has fixed the 5th day of October 1936 at 11 o'clock for hearing the application.

Dated this 24th day of August 1936.

[ILLEGIBLE], Sub-Judge.
(1784—1)

ORDER OF ADJUDICATION.

Section 27 of the Provincial Insolvency Act, V of 1920.

In the 4th Court of the Sub-Judge at Alipore.

INSOLVENCY APPLICATION No. 169 OF 1936.

PURSUANT to a petition, dated 17th April 1936, filed by Kali Krishna Shaha of 24, Sankoripara Road, police-station Bhowanipore, 24-Parganas, debtor, and on the application of the debtor himself and on reading his application and hearing his pleader, it is ordered that the debtor be and the said debtor is hereby adjudged insolvent.

It is further ordered that the debtor do apply for his discharge within 17th February 1937.

Dated this 17th day of August 1936.

[ILLEGIBLE], Sub-Judge
(1785—1)

ORDER OF ADJUDICATION.

Section 27 of the Provincial Insolvency Act, V of 1920.

In the 4th Court of the Sub-Judge at Alipore.

INSOLVENCY APPLICATION No. 174 OF 1936.

PURSUANT to a petition, dated 18th April 1936, filed by Muhammad Israil of 24/1, Bright Street, Park Circus, 24-Parganas, debtor, and on the application of the debtor himself and on reading his application and hearing his pleader, it is ordered that the debtor be and the said debtor is hereby adjudged insolvent.

It is further ordered that the debtor do apply for his discharge within 10th February 1937.

Dated this 10th day of August 1936.

S. P. BOSE, Sub-Judge.
(1786—1)

ORDER OF ADJUDICATION.

Section 27 of the Provincial Insolvency Act, V of 1920.

In the 4th Court of the Sub-Judge at Alipore.

INSOLVENCY APPLICATION No. 214 OF 1936.

PURSUANT to a petition, dated 6th May 1936, filed by Bholanath Kanu of Fakirghat, Khardah, 24-Parganas, debtor, and on the application of the debtor himself and on reading his application and hearing his pleader, it is ordered that the debtor be and the said debtor is hereby adjudged insolvent.

It is further ordered that the debtor do apply for his discharge within 10th February 1937.

Dated this 10th day of August 1936.

S. P. BOSE, Sub-Judge.
(1787—1)

ORDER OF ADJUDICATION.

Section 27 of the Provincial Insolvency Act, V of 1920.

In the 4th Court of the Sub-Judge at Alipore.

INSOLVENCY APPLICATION No. 221 OF 1936.

PURSUANT to a petition, dated 9th May 1936, filed by Aghore Sahani of Bridge Road, police-station Alipore, 24-Parganas, debtor, and on the application of the debtor himself and on reading his application and hearing his pleader, it is ordered that the debtor be and the said debtor is hereby adjudged insolvent.

It is further ordered that the debtor do apply for his discharge within 10th February 1937.

Dated this 10th day of August 1936.

S. P. BOSE, Sub-Judge.
(1788—1)

ORDER OF ADJUDICATION.

Section 27 of the Provincial Insolvency Act, V of 1920.

In the 4th Court of the Sub-Judge at Alipore.

INSOLVENCY APPLICATION No. 223 OF 1936.

PURSUANT to a petition, dated 9th May 1936, filed by Mrs. B. Cloridge of 134, Loco Quarters, Narkeldanga Main Road, 24-Parganas, debtor, and on the application of the debtor herself and on reading her application and hearing her pleader, it is ordered that the debtor be and the said debtor is hereby adjudged insolvent.

It is further ordered that the debtor do apply for her discharge within 10th February 1937.

Dated this 10th day of August 1936.

S. P. BOSE, Sub-Judge.
(1789—1)

ORDER OF ADJUDICATION.

Section 27 of the Provincial Insolvency Act, V of 1920.

In the 4th Court of the Sub-Judge at Alipore.

INSOLVENCY APPLICATION No. 240 OF 1936.

PURSUANT to a petition, dated 15th May 1936, filed by Abdul Karim of Kalaiagan, Durgapur, Alipore, 24 Parganas, debtor, and on the application of the debtor himself and on reading his application and hearing his pleader, it is ordered that the debtor be and the said debtor is hereby adjudged insolvent.

It is further ordered that the debtor do apply for his discharge within 10th February 1937.

Dated this 19th day of August 1936.

[ILLEGIBLE], Sub-Judge.
(1790—1)

ORDER OF ADJUDICATION.

Section 27 of the Provincial Insolvency Act, V of 1920.

In the 4th Court of the Sub-Judge at Alipore.

INSOLVENCY APPLICATION No. 282 OF 1936.

PURSUANT to a petition, dated 11th June 1936, filed by Harihar Singh of 33/1, Sastitola Road, Narikeldanga, 24-Parganas, debtor, and on the application of the debtor himself and on reading his application and hearing his pleader, it is ordered that the debtor be and the said debtor is hereby adjudged insolvent.

It is further ordered that the debtor do apply for his discharge within 10th February 1937.

Dated this 10th day of August 1936.

S. P. BOSE, Sub-Judge.

(1791—1)

ORDER OF ADJUDICATION.

Section 27 of the Provincial Insolvency Act, V of 1920.

In the 4th Court of the Sub-Judge at Alipore.

INSOLVENCY APPLICATION No. 285 OF 1936.

PURSUANT to a petition, dated 12th June 1936, filed by Batala Earana alias Patala Vieramma of Kelvin Jute Mill, Titagarh, 24-Parganas, debtor, and on the application of the debtor himself and on reading his application and hearing his pleader, it is ordered that the debtor be and the said debtor is hereby adjudged insolvent.

It is further ordered that the debtor do apply for his discharge within 19th February 1937.

Dated this 19th day of August 1936.

[ILLEGIBLE], Sub-Judge.

(1792—1)

ORDER ANNULLING ADJUDICATION.

Section 43 of the Provincial Insolvency Act, V of 1920.

In the 4th Court of the Sub-Judge at Alipore.

INSOLVENCY APPLICATION No. 389 OF 1935.

Shaik Taharak Hossain, applicant.

WHEREAS Shaik Taharak Hossain of 63/3, Barrackpore Trunk Road, Chitpore, 24-Parganas, debtor, does neither appear nor apply for discharge within the specified time, it is ordered that the order of adjudication, dated 17th February 1936, against the debtor be and the same is hereby annulled.

Dated this 17th day of August 1936.

[ILLEGIBLE], Sub-Judge.

ORDER ANNULLING ADJUDICATION.

Section 43 of the Provincial Insolvency Act, V of 1920.

In the 4th Court of the Sub-Judge at Alipore.

INSOLVENCY APPLICATION No. 434 OF 1935.

Bodhi Shaw, applicant.

WHEREAS Bodhi Shaw of 1/1, Dehi Serampore Road, police-station Beniapukur, 24-Parganas, debtor, does neither appear nor apply for discharge within the specified time, it is ordered that the order of adjudication, dated 10th February 1936, against the debtor be and the same is hereby annulled.

Dated this 10th day of August 1936.

S. P. BOSE, Sub-Judge.

ORDER ANNULLING ADJUDICATION.

Section 43 of the Provincial Insolvency Act, V of 1920.

In the 4th Court of the Sub-Judge at Alipore.

INSOLVENCY APPLICATION No. 516 OF 1935.

Kanai Mehter, applicant.

WHEREAS Kanai Mehter of Hazra Road, police-station Bhowanipore, 24-Parganas, debtor, does not proceed with his application for discharge, it is ordered that the order of adjudication, dated 27th January 1936, against the debtor be and the same is hereby annulled.

Dated this 18th day of August 1936.

[ILLEGIBLE], Sub-Judge.

MR. DWIJENDRA KUMAR BOSE, B.L., intends to be enrolled as an Advocate of the High Court.

(1759—4)

MR. ROHINI KANTO GHOSE, M.A., B.L., intends to be enrolled as an Advocate of the High Court.

(1820—4)

MR. AMULYA CHARAN NASKER, B.L., intends to be enrolled as an Advocate, High Court.

(1740—4)

MR. SISIR KUMAR BASU, M.A., B.L., intends to enrol as an Advocate of the Calcutta High Court.

(1680—4)

AMAL CH. CHATTERJEE, LL.B., Advocate (Punjab), intends to be enrolled as an Advocate, High Court.

(1641—4)

MR. AMARENDRA NATH GUPTA, M.Sc., B.L., intends to be enrolled as an Advocate, High Court.

(1630—4)

MR. BIMAL CHANDRA DAS GUPTA, M.A., B.L., intends to be enrolled as an Advocate, High Court.

(1642—4)

MR. NISHITH RANJAN MUKHOPADHYAY, B.L., intends to be enrolled as an Advocate, High Court.

(1651—4)

MR. SATYA BHUSAN CHAKRABERTTY, M.A., B.L., intends to be enrolled as an Advocate, High Court.

(1657—4)

MR. SUDHIR KUMAR BASU, M.A., B.L., intends to be enrolled as an Advocate, Calcutta High Court.

(1658—4)

KHAN BAHADUR SHARFUDDIN AHMAD, B.L., intends to be enrolled as an Advocate, High Court.

(1663—4)

WANTED by the district board of Jalpaiguri an Assistant Engineer on a pay of Rs. 150—25/2—200—10—300 with efficiency bar at Rs. 200 and travelling allowance according to the Fundamental Rules. None but a B. E. need apply. Preference will be given to an experienced man having knowledge in district board works. Application with copies of testimonials will be received by the undersigned up to 15th September 1936.

Rai Sahib K. C. GUE, B.A., B.Sc., B.E.,
District Engineer, Jalpaiguri.

Dated Jalpaiguri, the 20th August 1936.

(1744—3)

THE Bengal and Madras Service Family Pension Fund which is provisionally managed and assisted by Government has for its object the provision of monthly pensions for the maintenance of the widows and children of subscribers and is open, with certain exceptions, to all active and pensioned members of the Uncovenanted service of Government (except those serving under the Government of Bombay), and to Local Fund servants earning pensions from Government. Some of the special features of the fund are (1) that widowed daughters incapable of re-marriage or children labouring under such mental or bodily infirmities as incapacitate them from earning their livelihood or preclude the possibility of marriage (in case of a daughter) are admitted to its benefits; and (2) that subscribers to the Widows and Daughters' branches are entitled to a refund of 30 per cent. of the premia paid, should the nominee predecease them after five years of admission. The second quinquennial valuation of the Fund has been completed by the Actuary to the Government of India, and his report discloses very favourable results. For forms of application and rules of the Fund apply to the Accountant-General, Bengal, Imperial Secretariat Buildings, Calcutta.

Custom House Notice.

NOTICE is hereby given that whereas Messrs. J. F. Madan have failed to meet the demand made for duty on 33 packages of Four Crown whisky marked J. F. M. / Calcutta ex-ss. "Marhatta", and bonded at 5, Dharamtolla Street, under warehousing bill of entry No. 88 of 18th December 1931, the said goods will be sold by auction on the 15th September 1936 at noon in Messrs. Mackenzie Lyall & Co.'s sale room at No. 5, Mission Row, Calcutta, under the provisions of section 119 of the Sea Customs Act.

G. N. BOWER, Collector of Customs.

Custom House, Calcutta, the 29th/31st August 1936.

(1818—1)

Custom House Notice.

NOTICE is hereby given that whereas Messrs. Turnbull Brothers (Merchants), Ltd., have failed to meet the demand made for duty on 22 packages of Highland Cream whisky marked 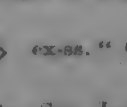 ex-ss. "C/o Venice" and bonded at 1/1, Umakanto Sen Lane, under warehousing bill of entry No. 11 of 4th August 1931, the said goods will be sold by auction on the 17th September 1936 at noon in Messrs. Mackenzie Lyall & Co.'s sale room at No. 5, Mission Row, Calcutta, under the provisions of section 119 of the Sea Customs Act.

G. N. BOWER, Collector of Customs.

Custom House, Calcutta, the 29th/31st August 1936.

(1819—1)

Estate Miss Catherine Stewart Cook, deceased.

PURSUANT to section 360 of Act XXXIX of 1925, and section 42 of Act XXVIII of 1866, the creditors and all persons interested in the estate of Catherine Stewart Cook, late of 74, now numbered 130, Finnart Street, Greenock, Scotland, spinster, who died at Greenock, aforesaid, on the 7th day of December 1935, and Letters of Administration to whose estate were granted by the High Court, Calcutta, on the 20th day of August 1936, are hereby required to submit particulars of their claims to the undersigned on or before the 10th day of October 1936, after which date the Administrator will distribute the assets, having regard only to the claims of which notice shall then have been received.

ORR, DIGNAM & CO.,
Solicitors to the Administrator.

32, Dalhousie Square, South, Calcutta, 29th August 1936.

(1821—1)

Estate Frederick George Roy Robertson, deceased.

PURSUANT to section 360 of Act XXXIX of 1925 and section 42 of Act XXVIII of 1866, the creditors and all persons interested in the estate of Frederick George Roy Robertson, formerly of Tipperlinn House, Edinburgh, and latterly of 81, Tufton Street, London, who died at London, on the 13th day of December 1934, and Letters of Administration to whose estate were granted by the High Court, Calcutta, on the 7th day of July 1936, are hereby required to submit particulars of their claims to the undersigned on or before the 6th day of October 1936, after which date the Administrator will distribute the assets, having regard only to the claims of which notice shall then have been received.

ORR, DIGNAM & CO.,
Solicitors to the Administrator.

32 Dalhousie Square, South, Calcutta, 27th August 1936.

(1809—1)

Lost Receipt.

A RECEIPT numbered 11251, dated 19th July 1935, and granted by the Reserve Bank of India, Public Debt Office, on submission of the undermentioned Government Promissory Note. Notice of loss has been given to the Reserve Bank of India, Public Debt Office, and the undersigned is about to apply for surrender of the security:—

G. P. Note No.	Loan.	Amount.	Holder's name.
111559	3 per cent., 1896-97.	Rs. 100	Jagannath Harnarayan.

Name of the proprietor—Jagannath Harnarayan.

Residence—15, Sambhu Nath Pandit Street, Bhowanipore, Calcutta.

(1757—1)

Lost Receipt.

A RECEIPT numbered 2640, dated 1st June 1936, and granted by the Reserve Bank of India, Public Debt Office, on submission of the undermentioned Government Promissory Note. Notice of loss has been given to the Reserve Bank of India, Public Debt Office, and the undersigned is about to apply for surrender of the security:—

G. P. Note No.	Loan.	Amount. Rs.	Holder's name.
G009363	5 per cent., 1939-44.	1,000	Debi Sankar Banerjee.

Name of the proprietor—Debi Sankar Banerjee.

Residence—Labpur, Birbhum.

(1817—1)

Lost.

THE Government promissory note No. 202171 of the 3½ per cent. loan of 1900-01 for Rs. 1,000 originally standing in the name of Bhoobun Mohini Debee (since deceased), the proprietress, by whom it was never endorsed to any other person, having been lost, notice is hereby given that payment of the above note and the interest thereupon have been stopped at the Public Debt Office, Reserve Bank of India, Calcutta, and that application is about to be made for the issue of duplicate in favour of Sm. Sasti Money Debi. The public are cautioned against purchasing or otherwise dealing with the abovementioned security.

Signature of the advertiser—Sasti Money Debi.

Residence—Khasbati, Halisahar, Hazinagore P.O., district 24-Parganas.

(1730—3)

Note.

PORTION of the following note of the Calcutta Circle of Issue is stated to have been destroyed. Payment of its value has been claimed by the person whose name is placed against the number. Any other person claiming a right to it is warned to communicate at once with the undersigned :—

Regtd. No.	No. of the note.	Value. Rs.	Name and address of the claimant.
W. D. 13 of 36.	T/13, 659649	100	Sekh Abdul Rauf, s/o Sk. Mohamad Nayeen, village Nipania, p. o. Marhowrah, district Saran.

S. GUPTA, Currency Officer.

Reserve Bank of India, Issue Department, Calcutta, the 20th August 1936.

IN THE HIGH COURT OF JUDICATURE AT FORT WILLIAM IN BENGAL.

Ordinary Original Civil Jurisdiction.

In the matter of the Indian Companies Act and In the matter of Madan Theatres, Limited.

NOTICE is hereby given that a petition for the winding up of the abovenamed Company by the High Court of Judicature at Fort William in Bengal was on the 17th day of August 1936 presented to the said Court by the Associated Talking Pictures, Ltd., a creditor of the said Company; that the said petition was directed to be heard before the Court on the 9th day of November 1936; and any creditor or contributory of the said Company desirous of opposing an order for winding up of the said Company under the above Act should appear at the time of hearing by himself or his Attorney or Advocate for that purpose; and a copy of the petition will be furnished to any creditor or contributory of the said Company requiring the same, by the undersigned, on payment of the prescribed charge for the same.

Dated this 24th August 1936.

ORR, DIGNAM & CO.,

Attorneys for the petitioner,

32, Dalhousie Square, Calcutta.

Note.—Rule 41 provides that any person who intend to appear on the hearing of the said petition must serve on or send by post to the abovenamed, notice in writing of his intention so to do. The notice must state the name and address of the person, or, if a firm, the name and address of the firm, and must be served, or, if posted, must be sent by post in sufficient time to reach the abovenamed not later than two clear days before the 9th day of November 1936.

(1756—1)

In the matter of the Indian Companies Act, 1913 and In the matter of the International Trading Office (India), Ltd.

AN extraordinary general meeting of the Company was held at 6, Hastings Street, in the office of Messrs. P. C. Nandi & Co., Auditors, at 12 noon on Wednesday, the 19th August 1936, and the following extraordinary resolution was duly passed:—

"As the Company cannot by reason of its liabilities continue its business, it is resolved to wind up the Company voluntarily. It is also resolved that Mr. P. C. Nandi, Chartered Accountant and Auditor of the Company, be appointed liquidator."

S. MUKERJEE, Chairman.

7, Old Ballygunge Road, Calcutta, the 19th August 1936.

(1811—1)

In the matter of the Indian Companies Act, 1913 and In the matter of the International Trading Office (India), Ltd. (In voluntary liquidation).

NOTICE is hereby given that a meeting of the creditors of the abovenamed Company will be held on Wednesday, the 23rd day of September 1936, at the office of the undersigned at 3-30 p.m.

P. C. NANDI, M.A. (Cantab.), B.Sc., R.A.,
Chartered Accountant, Liquidator.

6, Hastings Street, Calcutta, the 26th August 1936.

(1812—1)

In the matter of the Indian Companies Act and In the matter of the Great India Insurance, Ltd. (In voluntary liquidation).

NOTICE is hereby given that a petition for the winding up of the abovenamed Company by the High Court of Judicature at Fort William in Bengal was on the 24th day of August 1936 presented to the said Court by Bank of Commerce, Limited, a creditor of the said Company; and that the said petition is directed to be heard before the Court on the 10th day of September 1936; and any creditor or contributory of the said Company desirous of opposing an order for the winding up of the said Company under the above Act should appear at the time of hearing by himself or his Attorney or Advocate for that purpose; and a copy of the petition will be furnished to any creditor or contributory of the said Company requiring the same, by the undersigned, on payment of the prescribed charge for the same.

Dated this 25th day of August 1936.

P. C. MITTER & CO.,

Attorneys for the petitioner,

7, Old Post Office Street, Calcutta.

(1758—1)

In the matter of the Indian Companies Act, VII of 1913 and In the matter of the East End Bank, Limited.

AT an extraordinary general meeting of the abovenamed Company, duly convened and held at 30, Lyall Street, Dacca, on the fifth day of July 1936, the following resolutions were passed and at a subsequent extraordinary general meeting of the members of the said Company held at the same place on the twenty-sixth day of July 1936, the said following resolutions were duly confirmed as special resolutions, viz.:—

(a) That as the Company cannot by reason of its liabilities continue its business, it is advisable to wind it up and that with a view thereto this Company be wound up voluntarily and that the Comilla Banking Corporation, Ltd. (Dacca Branch), be and the same are hereby appointed liquidators for the purpose of such winding up.

(b) That apart from the general authority to exercise all the powers as voluntary liquidators, the aforesaid liquidators are hereby vested with the special authority to amalgamate, in the course of winding up, this Company (viz., the transferor Company) with the Comilla Banking Corporation, Ltd. (the transferee Company), and with a view thereto transfer the assets and liabilities of this Company to the said Corporation and receive from the said transferee Company, in compensation shares, or other interests or profits or any other benefits for distribution among the members of this transferor Company.

And at such last mentioned meeting The Comilla Banking Corporation, Ltd. (Dacca Branch), of 2, Simpson Road, Dacca, were appointed liquidators for the purposes of the winding up.

BIRENDRA NATH BOSE, Chairman.

Dated the 13th August 1936. (1763—1)

In the matter of the Indian Companies Act, 1913, and

In the matter of the International Trading Office (India), Ltd.

(In voluntary liquidation).

THE creditors of the abovenamed Company are required on or before the 9th day of September 1936 to send their names and addresses and the particulars of their debts and claims and the names and addresses of their attorneys (if any) to P. C. Nandi, M.A. (Cantab.), B.Sc., Chartered Accountant, of No. 6, Hastings Street, Calcutta, the liquidator of the abovenamed Company, and if so required by notice in writing from the said liquidator shall either in person or by their attorneys prove their said debts or claims at such time as shall be specified in such notice, or in default thereof they will be excluded from the benefit of any distribution made before such debts are proved. The 14th day of September 1936 at 2-30 o'clock in the afternoon at the office of the said liquidator at No. 6, Hastings Street, Calcutta, is appointed for the investigation of debts and claims.

P. C. NANDI, M.A. (Cantab.), B.Sc., R.A.,
Chartered Accountant, Liquidator.

6, Hastings Street, Calcutta, the 26th August 1936.

(1813—1)

In the matter of the Indian Companies Act, 1913, and

In the matter of the Malay Insurance Co., Ltd. (In liquidation).

NOTICE is hereby given that at an extraordinary general meeting of the shareholders of the abovenamed Company duly convened and held at the registered office of the Company on 19th August 1936, the following extraordinary resolutions were duly passed:—

Resolved that the Company cannot by reason of its liabilities continue its business and it is advisable to wind up the Company voluntarily; and Babu Bijoy Ranjan Mittra, B.L., and Babu Kamakhya Charan Chakraborty, muktear of Balubari, Dinajpur, be hereby appointed as honorary liquidators for such winding up.

UMESH CHANDRA GHOSE, Chairman.

Dinajpur, the 24th August 1936.

(1794—1)

In the matter of the Indian Companies Act, VII of 1913, and

In the matter of the Bengal Flour Mills Company Limited.

NOTICE is hereby given that the Order of the High Court of Judicature at Fort William in Bengal, dated the 17th August 1936, confirming the reduction and reorganisation of the Capital of the abovenamed Company from Rs. 12,00,000, divided into 12,000 shares of Rs. 100 each, all issued and fully paid up, to Rs. 12,00,000 divided into 120,000 shares of Rs. 10 each, of which 72,000 shares have been issued and fully paid up, and the Minute approved by the said Court showing with respect to the Capital of the said Company as altered by the said Order the several particulars required by the abovementioned Act were registered by the Registrar of Joint Stock Companies, Bengal, on the 31st day of August 1936. The said Minute is in the words and figures following, namely:—

"The Capital of the Bengal Flour Mills Company Limited, is now Rs. 12,00,000 divided into 120,000 shares of Rs. 10 each instead of Rs. 12,00,000 divided into 12,000 shares of Rs. 100 each. At the date of the registration of this Minute 72,000 shares of Rs. 10 each have been issued and are to be deemed to be fully paid up."

SANDERSONS & MORGANS,
Solicitors for the Company.

Calcutta, the 31st August 1936.

(1822—1)

Imperial Library.

Secretariat Buildings, 6, Esplanade East, Calcutta.

Open on—

Week days and Saturdays from 10 a.m. to 7 p.m.
Sundays and Gazetted holidays from 2 p.m. to 5 p.m.

THE Imperial Library is also a Lending Library. It is free to all except children. There is no subscription to pay.

K. M. ASADULLAH, Librarian.

INDIAN LAW REPORTS.

CALCUTTA SERIES of Indian Law Reports from 1876 onwards are available in the Publication Branch, Bengal Government Press, Alipore, Bengal. Enquiries for these may be made to Superintendent, Government Printing, at the above address. Monthly parts from 1930 onwards are available also at the Sales Department, Writers' Buildings, Calcutta—

PRICES.

From 1876 to 1934.

Complete yearly volume Rs. 12 { (postage Rs. 3 Inland). (,, Rs. 4 Foreign).

From 1930 onwards.

Monthly parts only Rs. 2 { (postage As. 2 Inland). (,, As. 3 Foreign).

Enquiries for series other than Calcutta must be made to the publishers concerned.

C. R. BATTERSBY,
Supdt., Govt. Printing, Bengal.

Alipore, the 6th December 1934.

GOVERNMENT OF BENGAL.

FINANCE DEPARTMENT.

Miscellaneous.

Calcutta, the 20th October 1927.

NOTICE.

IN supersession of the orders issued in notice, dated the 10th June 1922, published in the *Calcutta Gazette*, dated the 14th June 1922, the following revised rates have been fixed for the *Calcutta Gazette* and its parts with effect from the date of this notice. This will not, however, affect the subscriptions already paid at previous rates until they have expired:—

	Net.	With postage.
Per annum—	Rs.	Rs. A.
Entire	31	37 8
Part I	8	10 0
Part IA	2	3 0
Part IB	5	7 0
Part II	5	7 0
Parts III and IV together, or any one of them ..	1	1 8
Parts V and VI together, or any one of them ..	2	3 0
Bengal Library Catalogue ..	2	3 0
Jury Lists	3	4 0
Supplement	7	9 0

	Postage according to weight.
Per issue—	Rs. A.
Entire Gazette (excluding Bengal Library Catalogue and Jury Lists) ..	0 12
Part I	0 4
Part IA	0 2
Part IB	0 4
Part II	0 4
Parts III and IV together, or any one of them	0 2
Parts V and VI together, or any one of them	0 2
Bengal Library Catalogue ..	0 8
Jury Lists	1 0
Supplement	0 4

2. This will not affect the orders relating to specially heavy issues, issued in Notice No. 1874 Min., dated the 22nd August 1923, published in the *Calcutta Gazette*, dated the 29th August 1923.

J. A. WOODHEAD,
Secretary to the Government of Bengal.

CINCHONA FACTORY PRODUCTS.

By order of the Government of Bengal Cinchona Factory Products as manufactured and packed at the Cinchona Factory, Mungpoo, Darjeeling district, will be sold and distributed by the Superintendent of the **Presidency Jail**, *in original packages* as received from the Mungpoo Factory, at the rates herein noted **from the 1st May 1926 :—**

Name of drug.	Price per lb. in powder form. Taken at a time. For 60 lbs. and upwards.	For 6 lbs. and over but less than 60 lbs.	For any quantity less than 6 lbs.	Price in 5 grain tablets. 1,000 tablets.	500 tablets.	250 tablets.	Price by weight per lb.
	Rs.	Rs.	Rs.	Rs.	Rs. a.	Rs. a.	Rs.
Quinine Bisulphate ..	18	19	20	16	8 0	4 4	..
„ Hydrobromide ..	23	24	25	20	10 0	5 4	..
„ Bihydrobromide ..	26	27	28	23	11 8	6 0	..
„ Salicylate ..	24	25	26	..	..	..	..
„ Tannate ..30 per cent. 35 per cent.	14	15	16	..	..	—	14

N.B.—Packing free in tins, sizes 1 lb., 8 oz. and 4 oz. only. Packing in bottles or smaller sizes of tins extra.

Quinine Sulphate.

For 60 lbs. and upwards at a time .. Rs. 18 per lb.
For 6 lbs. and over but less than 60 lbs. at a time .. .. .. „ 19 „
For any quantity less than 6 lbs. .. „ 20 „

Totaquina.

Irrespective of quantity .. Rs. 13-8 per lb.
For sale to hospitals and dispensaries in Bengal, Bihar, Orissa and Assam.

Quinine Hydrochloride.

For 60 lbs. and upwards at a time .. Rs. 23 per lb.
For 6 lbs. and over but less than 60 lbs. at a time .. .. .. „ 24 „
For any quantity less than 6 lbs. .. „ 25 „

Quinine Di-Hydrochloride.

For 60 lbs. and upwards at a time .. Rs. 25 per lb.
For 6 lbs. and over but less than 60 lbs at a time .. .. .. „ 26 „
For any quantity less than 6 lbs. .. „ 27 „

Quinidine Sulphate.

For 60 lbs. and upwards at a time .. Rs. 20 per lb.
For 6 lbs. and over but less than 60 lbs. at a time .. .. .. „ 21 „
For any quantity less than 6 lbs. .. „ 22 „

Cinchonidine Sulphate.

For 60 lbs. and upwards at a time .. Rs. 25 per lb.
For 6 lbs. and over but less than 60 lbs. at a time .. .. .. „ 26 „
For any quantity less than 6 lbs. .. „ 27 „

Cinchonine Sulphate.

For 60 lbs. and upwards at a time .. Rs. 12 per lb.
For 6 lbs. and over but less than 60 lbs. at a time .. .. .. „ 13 „
For any quantity less than 6 lbs. .. „ 14 „

*Cinchona Febrifuge (Powder).

For 60 lbs. and upwards at a time .. Rs. 9 per lb.
For 6 lbs. and over but less than 60 lbs. at a time .. .. .. „ 9 „
For any quantity less than 6 lbs. .. „ 10 „

*Cinchona Febrifuge (Tablets).

For 60 lbs. and upwards at a time .. Rs. 10 per lb.
For 6 lbs. and over but less than 60 lbs. at a time .. .. .. „ 10 „
For any quantity less than 6 lbs. .. „ 11 „

Supply of Cinchona Febrifuge to all authorised indentors will be rationed in the proportion of 1½ of Cinchona Febrifuge to 1 of Quinine Sulphate at their existing prescribed prices.

Cinchona Bark (in 50 pound original bags).

Per bag .. .. .. Rs. 25.

4 grains Quinine Tablets.

Rs. a.
2 8 per box of 200 tablets (for Bengal and other provinces).
12 1 per 5 boxes—(Transit charges inclusive) for Public in Bengal.
15 8 per lb.

5 grains Quinine Tablets.

Rs. a.
15 8 per lb. sold in 1 lb., ½ lb. and ¼ lb. tins.

5 grains Quinine Hydrochloride Tablets.

Rs. a.
20 0 per 1,000 tablets.
10 0 „ 500 „
5 4 „ 250 „

Packing free in tins, sizes 1 lb., 8 oz. and 4 oz. only. Packing in bottles or smaller sizes in tins extra.

5 grains Quinine Bihydrochloride Tablets.

Rs. a.
22 0 per 1,000 tablets.
11 0 „ 500 „
6 0 „ 250 „

Packing free in tins, sizes 1 lb., 8 oz. and 4 oz. only. Packing in bottles or smaller sizes in tins extra.

Transit charges extra in every case.

***Cinchona Febrifuge** is for sale to Government and Charitable Institutions, Local Bodies and Missionaries only. **It is not for sale to Private Firms or the General Public.**

Quinine Sulphate is now open for sale to the Public at the above rates. But it will be supplied to Hospitals and Dispensaries in Bengal, Bihar, Orissa and Assam at Rs. 18 per pound irrespective of quantities.

Five and ten boxes of Quinine Tablets are sold to the public at the concession rates which will be intimated on application.

Provinces other than Bengal, Bihar, Orissa and Assam will get their supplies of Sulph. Quinine and Cinchona Febrifuge Powder and Tablets from the Director, Botanical Survey of India, Sibpur, Howrah.

Local sale at the jail gate from 10 to 12 noon.

The system of payment is by—*Cash in advance*—by "*Treasury Challans*," which should accompany the order or indent.

In cases where this is not possible, payment should be made by "*Remittance Transfer Receipts*" or crossed "*Cheques.*"

Indents unaccompanied by cash in advance will be sent Value Payable Post. Credit sale is not allowed except under special circumstances.

In the case of *Government officers* payments will be recovered by *Book Transfer*, i.e., *Countersigned Invoices*, in the event of *Cash* not accompanying the indent by "*Treasury Challans*," *Remittance Transfer Receipt or Cheque.*

2. Price and postage must accompany the price of the drug (when the drug is required by post).

The name of the Railway and Steamer Station or Post Office must be written distinctly when the parcels are required by Rail, Steamer or by Post. Railway parcels are sent by passenger train only.

A scale of postage is given below.

	1 oz.	2 ozs.	4 ozs.	¼ lb.	½ lb.	1 lb.
	As.	As.	As.	As.	As.	Rs. A.
Quinine Sulph. ..	..	..	7	7	11	0 11
Cinchona Feb. ..	..	..	7	7	11	0 11
Cinchona Feb. Tablets	..	..	7	7	11	0 11
Quinine Hydrochlor. ..	5	5	7	7	..	0 11
Quinine Di-hydrochlor.	5	5	7	7	..	0 11
Quinine Tablets ..	..	..	7	7	11	0 11
Totaquina ..	..	..	7	7	11	0 11

	1¼ lb.	2 lb.	3 lb.	4 lb.	5 lb.	6 lb.
	Rs. A.	Rs. A.	Rs. A.	Rs. A.	Rs. A.	Rs. A.
Quinine Sulph. ..	0 15	1 3	1 7	1 15	2 7	2 11
Cinchona Feb. ..	0 15	0 15	1 7	1 11	2 3	2 7
Cinchona Feb. Tablets	0 15	1 3	1 11	1 15	2 7	2 15
Quinine Hydrochlor. ..	0 15	1 3	1 7	1 15	2 7	2 11
Quinine Di-hydrochlor.	0 15	0 15	1 7	1 11	2 3	2 7
Quinine Tablets ..	0 15	0 15	1 7	1 11	1 15	2 3
Totaquina ..	0 15	1 3	1 7	1 15	2 7	2 11

Two different drugs are not packed in the same parcel and postage must be paid separately for each kind.

N.B.—Postage stamps are not accepted as revenue.

Government reserve the right to alter the price without notice.

Registered No. C207

The Calcutta Gazette

THURSDAY, SEPTEMBER 3, 1936.

PART VI

Bills introduced in the Council of State and Legislative Assembly, Reports of Select Committees presented to the Council and Assembly, and Bills published under Rule 18 of the Indian Legislative Rules.

GOVERNMENT OF INDIA.

Legislative Assembly Department.

NOTIFICATION.

Simla, the 20th August, 1936.

No. F. 134-I/36-A.—Under Rule 18 of the Indian Legislative Rules, the Governor General has been pleased to order the publication in the Gazette of India of the following Bill, together with the Statement of Objects and Reasons relating thereto, and the Bill and Statement of Objects and Reasons are accordingly published for general information:—

L. A. BILL No. 31* OF 1936.

A Bill further to amend the Indian Motor Vehicles Act, 1914, for certain purposes.

WHEREAS it is expedient further to amend the Indian Motor Vehicles Act, 1914, for the purposes hereinafter appearing; It is hereby enacted as follows:— VIII of 1914.

Short title and extent.

1. (*1*) This Act may be called the Indian Motor Vehicles (Amendment) Act, 1936.

(*2*) It extends to all parts of British India in which the Indian Motor Vehicles Act, 1914, or any part thereof is now in force, except the United Provinces; but the Local Government of the United Provinces may, by notification in the local official Gazette, extend this Act to that Province. VIII of 1914.

Amendment of section 2, Act VIII of 1914.

2. In section 2 of the Indian Motor Vehicles Act, 1914 (hereinafter referred to as the said Act), VIII of 1914.,—

(*a*) in the definition of "Motor vehicle", for the word "includes" the word "means" shall be substituted, and to that definition the following words shall be added, namely:—

", and includes a vehicle drawn by or attached to or adapted to be drawn by or attached to such vehicle, carriage or means of conveyance"; and

(*b*) after the definition of the words "public place" the following definition shall be inserted, namely:—

"'transport motor vehicle' means a motor vehicle used or normally used for the carriage for hire or reward of passengers or of passengers and goods, or a motor vehicle used or normally used for the carriage of goods whether for hire or reward or otherwise, and includes any motor vehicle having seating capacity for more than seven persons."

Insertion of new sections 10A and 10B in Act VIII of 1914.

3. After section 10 of the said Act the following sections shall be inserted, namely:—

Transport authorities and road service permits.

"10A. (*1*) The Local Government may, by notification in the local official Gazette, constitute for the province and for specified areas or for specified roads in the province, transport authorities to exercise and discharge throughout the province or such areas or roads respectively the powers and functions conferred by or under this Act on transport authorities, or such of those powers and functions as may be specified in the notification either in respect of all transport motor vehicles or in respect of specified classes of transport motor vehicles.

(*2*) Where any transport authority has been constituted by notification under sub-section (*1*) no transport motor vehicle or no transport motor vehicle of a class specified in the notification as the case may be shall, save as otherwise provided under clause (*b*) of section 11A, be used in any public place except under and in accordance with the conditions of a

*The Governor General has been pleased to accord the sanction required by section 67(2) of the Government of India Act.

road service permit issued or countersigned by the transport authority having jurisdiction in respect of such place.

Powers of transport authorities.

10B. A transport authority may, subject to the provisions of any rules made under section 11A,—

(*a*) limit the number of transport motor vehicles or the number of any specified class of transport motor vehicles in respect of which road service permits may be granted for a specified area or a specified route;

(*b*) issue road service permits in respect of particular vehicles or a service of vehicles for a specified area or a specified route;

(*c*) attach to road service permits any prescribed condition and any one or more of the following conditions, namely:—

(*i*) that the charges made for the carriage of passengers or goods in any vehicle covered by the permit shall be as fixed by, or within limits fixed by, the transport authority or other prescribed authority;

(*ii*) that any vehicle covered by the permit or, in the case of a service of vehicles, the vehicles of that service shall adhere to a time-table to be approved by the transport authority or other prescribed authority;

(*iii*) that time-tables and fare-tables shall be published to the satisfaction of the transport authority or other prescribed authority;

(*d*) modify any road service permit issued by it."

Amendment of section 11, Act VIII of 1914.

4. In sub-section (*2*) of section 11 of the said Act,—

(*a*) to clause (*c*) the following words shall be added, namely:—

"and in the case of transport motor vehicles, providing for limiting the number of passengers carried in, or the maximum laden weight of, any such vehicle, and for the inspection of such vehicles or any class of such vehicles";

(*b*) clause (*e*) shall be omitted;

(*c*) after clause (*f*) the following clause shall be inserted, namely:—

"(*ff*) providing for the establishment of authorised stations for the regular taking up or setting down of passengers and goods by transport motor vehicles of any specified class in any specified area, and for prohibiting the use for that purpose of any place not so authorised;";

(*d*) After clause (*g*) the following clause shall be inserted, namely:—

"(*gg*) in the case of transport motor vehicles or any class thereof, regulating the conduct of passengers, drivers and conductors, prescribing the records to be maintained by drivers and conductors, and limiting the hours of work of drivers;";

(*e*) in clause (*h*), before the word "prohibiting" the words "restricting in respect of specified areas or roads the classes of motor vehicle that may be driven and" shall be inserted, and the word "and" shall be omitted;

(*f*) after clause (*h*) the following clause shall be inserted, namely:—

"(*hh*) requiring the owners of motor vehicles or any class of motor vehicles to effect policies of insurance against liabilities incurred through the death or bodily injury of any person caused by or arising out of the use of such vehicle in a public place, defining the provisions to be included in such policies, and specifying the companies with which such policies may be effected; and".

Insertion of new section 11A in Act VIII of 1914.

Further power of of Local Government to make rules respecting transport authorities and road service permits.

5. After section 11 of the said Act the following section shall be inserted, namely:—

"11A. The Local Government may, by notification in the local official Gazette, and subject to the condition of previous publication, make rules for all or any of the following purposes, namely:—

(*a*) prescribing the form and the duration of road service permits, the fees (if any) payable in respect thereof, and the procedure to be followed in applying therefor;

(*b*) providing for the issue of special or temporary road service permits;

(*c*) prescribing the conditions that may be attached to road service permits;

(*d*) regulating the powers and functions of transport authorities;

(*e*) regulating the procedure of transport authorities;

(*f*) defining the considerations by which transport authorities shall be guided in granting or refusing to grant road service permits;

(*g*) providing for appeals from the orders of transport authorities;

(*h*) prescribing the conditions and limitations subject to which road service permits may be suspended or cancelled, and the authorities (other than the Local Government or a transport authority) which may suspend permits, and providing for appeals against the orders of any such authorities;

(*i*) prescribing the authorities (other than the transport authority) referred to in clause (*c*) of section 10B."

Amendment of section 18, Act VIII of 1914.

6. In section 18 of the said Act,—

(*a*) in clauses (i) and (ii) of sub-section (*1*), after the word "licence" the words "or road service permit" shall be inserted;

(*b*) after sub-section (*1A*) the following sub-section shall be inserted, namely:—

"(*1B*) A transport authority may cancel or suspend a road service permit issued by it, and the prescribed authority may suspend any road service permit."; and

(*c*) after sub-section (*7*) the following sub-section shall be inserted, namely:—

"(*8*) The provisions of sub-sections (*4*), (*5*), (*6*) and (*7*) relating to licences shall apply in like manner to road service permits."

Saving of rules made under section 11.

7. Notwithstanding the repeal by this Act of clause (*e*) of sub-section (*2*) of section 11 of the said Act, rules made under that clause and in force at the commencement of this Act shall continue to be in force and of effect until cancelled by the Local Government by notification in the local official Gazette.

STATEMENT OF OBJECTS AND REASONS.

The Indian Motor Vehicles Act, 1914, was framed to suit conditions prevailing at a very early stage in the development of motor transport in India. The rapid growth of that form of transport in twenty-two years makes it necessary to empower local authorities to exercise a closer control than the present Act permits in the interests alike of the development of a co-ordinated policy of roads and railways, and of the safety and convenience of the public.

The question of the co-ordination of road and railway, the elimination of wasteful and uneconomic competition between the two forms of transport and the methods by which these objects can be secured consistently with the public interest, has engaged the attention of the Government of India for some years past. In 1932-33, Messrs. Mitchell and Kirkness carried out, at the instance of the Government of India, an enquiry into these problems and their report, which was published in January 1933, emphasised the importance of early action. The Road-Rail Conference convened by the Government of India in April 1933 passed a resolution, *inter alia*, recommending control of public service and goods motor transport in the interests of public safety and convenience, and restriction of vehicles to prevent wasteful competition. Thereafter, in January 1935, the Transport Advisory Council, at its first meeting, made definite recommendations to the same effect. Amendments to the Act were drafted to give effect to the recommendations as far as possible and Local Governments were consulted. The latter were, on the whole, in favour of legislation but there were differences on points of detail. It is generally recognised that it will be necessary, before long, to undertake a general revision of the Act, but the Government of India consider that it is essential in the meantime to give powers to Local Governments to regulate transport motor vehicles, as well as trailers and other attachments, and to enforce where necessary regional and route control as recommended by the Transport Advisory Council. The Government of the United Provinces have already enacted a similar measure. The Bill now presented is the outcome of the discussions referred to and represents the final recommendations of the Transport Advisory Council at its last meeting in July 1936.

F. NOYCE.

SIMLA:

The 3rd August, 1936.

NOTES ON CLAUSES.

Clause 1 (1).—In order to avoid possible complications on the coming into force of the Government of India Act, 1935, it is proposed that the amendments take effect forthwith. Clause 7 ensures that there will be no embarrassment to Local Governments.

Clause 1 (2).—Since the local legislature of the United Provinces have recently passed an Act much on the lines of the Bill, it is proposed to exclude that Province from the immediate scope of the Bill, but provide that the Local Government may, by notification in the Local Gazette, extend the amended Act to the United Provinces.

Clause 2 (a).—The widening of the definition of "motor vehicle" is intended to bring trailers and other attachments as such within the scope of the provisions of Part III of the 1914 Act. Suitable exemptions can be allowed under section 13 if Local Governments consider it unnecessary to require the registration of light trailers or other attachments.

Clause 2 (b).—The term "transport motor vehicle" has been used in preference to the more familiar "public service motor vehicle" or "public motor vehicle" as less likely to cause confusion with the British Acts and existing provincial rules. The term has been very widely defined so as to include not only vehicles *used* for the carriage for hire or reward of passenger or goods or both but vehicles *adapted for such use*. This must be borne in mind in considering the suitability of the provisions which follow.

Clause 3.—Proposed new section 10A.—(1) This sub-clause as drafted gives Local Governments very wide discretion as to the authorities to be appointed, the powers to be exercised by those authorities, and the classes of public transport motor vehicles to be controlled. In the opinion of the Government of India it is desirable to empower Local Governments to constitute, in each province, a provincial authority with power to supervise and co-ordinate, and "area" authorities exercising jurisdiction within specified areas.

(2) This sub-clause introduces no new principle, as motor vehicles which are let or plied for hire are already subject to special regulation. The word "countersigned" has been preferred to "endorsed," in view of the special meaning attached to endorsements in section 18.

Proposed new section 10B.—(*a*) This confers power to limit the number of public transport motor vehicles of any specified class to be used in any area or on any specified route. The absence of this power is one of the main defects in the Act as it now stands.

(*b*) "Road Service Permits" may be granted for an area or a route and not only for individual vehicles but for "services" or "fleets," *e.g.*, an owner employing ten vehicles of which not more than 8 are in use at any one time would be able to obtain a permit covering the simultaneous use of eight vehicles of a stated capacity.

(*c*) It will be seen that power is given to fix the limits of the rates to be charged for goods. It is obviously desirable that the transport authority or other prescribed authority should have such power.

(*d*) The power to cancel or suspend is dealt with in clause 6.

Clause 4.—(*a*) Provision for inspection is clearly needed. Vehicles found on inspection to be unfit for use can be dealt with under rules made under section 11(*2*) (*i*).

(*b*) In view of new sections 10B and 11A, section 11 (*2*) (*e*) is no longer required and it is proposed to repeal it subject to the safeguard provided in clause 7.

(*c*) Unauthorised bus stands have been found to be a source of confusion and have interfered with proper traffic regulation.

(*e*) It is considered that existing clauses (*c*), (*h*) and (*i*) of section 11 (*2*) are possibly insufficient to enable Local Governments to make rules regulating the classes of motor vehicles which may be used in specified areas or on specified routes, or where necessary prohibiting altogether the use of specified classes of motor vehicle.

(*f*) The first Transport Advisory Council which met in January 1935, recommended that provision should be made for insurance against passenger and third party risks, and the importance of having such a provision has been brought to notice in connection with several road accidents in recent months.

Clause 5.—The new section 11A confers rule making powers on Local Governments with special reference to transport motor vehicles, transport authorities and road service permits which will enable them to carry out the recommendations of the Transport Advisory Council.

Clause 6.—Local Governments are given full discretionary powers to cancel or suspend road service permits and to make disqualifications; transport authorities are given power to cancel or suspend road service permits issued by them, and other prescribed authorities the power to suspend road service permits.

Clause 7 is intended to remove any doubts that might exist as to the rules now in force.

Registered No. C207

No. 36 of 1936

The Calcutta Gazette

THURSDAY, SEPTEMBER 3, 1936.

CONTENTS:

	Page.		Page.
Statements of weekly gauge-readings on certain rivers in Bengal	1173 & 1190	Vital Statistics of towns of Bengal for the week ending 22nd August 1936 ..	1192
Daily Rainfall recorded in Bengal for the month of July 1936	1174—1189		
Statements under the Cotton Ginning and Pressing Factories Act, 1925 ..	1191	Weather and Crop Report for the week ending 26th August 1936	1193—1196

SUPPLEMENT.

Official Papers.

Statement of weekly gauge readings on the river Ganges at Rampur Boalia for the week ending the 22nd August 1936.

Date.	Hour.	Height of surface above P. W. D. datum.	Height of surface above P. W. D. datum on the same date last year.	Remarks.
1936.				
16th August	7 a.m.	63·45	60·55	Value of B. M. on Rajshahi College step =64·73 P. W. D. Zero of gauge=0·00 P. W. D.
17th „	7 „	63·45	60·70	
18th „	7 „	63·30	60·80	
19th „	7 „	63·10	61·10	
20th „	7 „	62·80	61·30	
21st „	7 „	62·25	61·40	
22nd „	7 „	61·80	61·45	

Highest recorded level on 26-8-1879=64·24.
Lowest recorded level on 24-4-1931=32·05.

S. Gupta, *Subdivisional Officer,*
Irrigation Department, Rajshahi.

Rampur Boalia, the 23rd August 1936.

DAILY RAINFALL RECORDED IN BENGAL

Note—The total and the average rainfall for all districts have been

Division and district.	Station.	1	2	3	4	5	6	7
Presidency.								
24-Parganas ..	Saugar Island (Obsy.) ..	0·13	0·07	0·77	0·05	0·02	1·29	1·08
	Diamond Harbour ..	..	1·65	2·51	0·64	1·70	0·14	..
	Budge-Budge	0·01	0·06	1·09	..	0·03	0·09	0·36
	Canning Town	0·45	1·70	..	..	0·10	1·73	3·15
	Alipore (Obsy.)	0·02	..	0·68	..	0·13	0·78	0·53
	Barrackpore	..	0·18	..	0·55	0·38	0·85	1·32
	Dum Dum*							
	Baraset	..	..	0·20	..	0·50	0·45	..
	Basirhat	0·08	0·11	..	..	..	0·90	2·65
	Gosaba	..	..	..	..	0·40	1·40	2·70
Nadia ..	Ranaghat	..	0·16	0·12	..	..	1·63	0·67
	Krishnagar (Obsy.) ..	..	0·68	0·29	0·11	..	0·03	0·36
	Chuadanga	0·21	0·03	0·27	0·11	..	0·09	1·69
	Meherpur	0·05	0·15	0·35	..	1·70	4·10	0·70
	Kushtia	0·65	2·25	..	0·32	..	1·54	0·68
	Haringhata	0·82	..	..	..	..	0·10	..
Murshidabad ..	Kandi	0·04	0·65	1·38	..	..	1·41	0·20
	Berhampur (Obsy.) ..	0·12	0·11	0·61	0·07	..	..	0·60
	Lalbagh	..	0·25	..	0·30	..	..	0·87
	Azimganj*							
	Jangipur	0·04	0·06	1·56	0·34	..	..	0·16
	Lalgola	..	0·14	0·47	0·23	..	..	0·52
	Akriganj	..	0·21	0·94	0·40	..	0·77	..
	Patkabari	0·05	0·16	0·29	..	..	2·36	0·24
	Dumkal	..	0·27	0·06	..	..	..	1·46
	Kallyanganj (Ishanpur) ..	..	0·10	0·35	0·31	..	0·56	1·84
	Khargram	0·20	0·09	0·94	0·40	..	0·45	0·80
	Bharatpur	0·33	..	0·42	0·76	0·13	..	3·16
Jessore ..	Narail	..	0·12	..	..	0·11	3·47	..
	Jessore (Obsy.)	0·05	0·14	1·08	0·39	0·19	0·12	0·72
	Jhenida	0·30	0·47	0·19	..	0·05	1·57	0·47
	Magura	..	0·65	..	..	0·45	0·80	0·95
	Bongaon	0·25	..	0·15	..	..	1·13	0·93
Khulna ..	Satkhira (Obsy.) ..	0·13	..	0·04	0·06	0·13	0·04	2·50
	Bagerhat	..	..	..	0·28	..	1·25	1·24
	Khulna (Obsy.) ..	0·33	..	0·09	0·10	0·59	1·41	1·42
	Kaliganj	0·26	..	..	1·50	0·26	4·50	0·89
	Nakipur	0·10	..	0·08	0·06	0·07	0·09	1·00
	Dumuria	0·35	..	..	0·05	0·65	0·40	3·25
	Rampal	..	0·25	0·15	0·50	..	..	0·20
	Kalaroa	0·31	0·08	0·06	..	0·05	0·83	0·11
	Paikgachha (Raruli) ..	..	..	0·84	0·58	1·40	..	1·80
	Mollahat	..	..	..	0·20	..	2·03	..
	Morelganj	0·17	0·15	0·25	..	..	0 35	1·35
	Islamkati	..	..	0·46	0·05	0·17	..	5·19
Burdwan.								
Burdwan ..	Kalna	0·02	0·81	..	..	0·13	1·18	..
	Burdwan (Obsy.) ..	0·29	0·08	0·23	0·16	..	0·54	4·36
	Katwa	0·14	0·62	0·18	0·51	..	..	2·45
	Asansol (Obsy.) ..	0 15	0·10	0·90	0·67	0·02	0·02	0·21
	Mankar	0·12	0·19	2·15	..	0·85	1·49	0·95
	Mangalkot	..	0·45	0·20	..	..	1·18	0·04
	Royna	..	0·42	..	..	0·10	0·40	0·35
	Monteswar	..	0·25	0·50	..	1·63	1·89	1·98
Birbhum ..	Suri	0·52	0 02	0·06	0·48	0·78	0·31	1·78
	Hetampur	0·19	0·04	1·29	0·45	1·10	..	0·65
	Rampurhat	..	..	..	0·70	..	..	0·88
	Bolpur	0·32	..	0·30	..	..	..	2·35
	Murarai	..	1·35	..	..	..	..	1·13
	Labpur	..	..	0·30	..	..	..	0·70
	Nalhati*							
	Mayureswar*							

* Not reported.

FOR THE MONTH OF JULY 1936.

calculated using the data of only those stations for which normals are available.

8	9	10	11	12	13	14	15	16	17	18	19	20
0·36	0·23	..	0·90	0·18	..	0·28	(a)	(a)	0·10	0·50	0·19	0·10
0·37	..	..	1·70	0·43	0·13	..	0·22	0·20	0·77	..	0·20	0·24
0·11	0·04	0·13	3·08	0·24	0·85	0·03	0·49	0·03	..	1·75	0·11	0·04
..	..	..	3·23	..	..	..	0·50	0·63	..	..	0·63	0·15
..	0·04	..	3·36	0·34	0·02	0·11	..	0·20	0·04	0·40	0·37	0·01
1·41	1·38	1·78	0·62	..	1·00	0·32	0·52	0·26	..	..	0·12	..
..	..	0·50	..	0·30	..	0·40	0·20	..	0·25	0·10	..	..
0·06	0·24	..	2·15	0·50	0·03	..	1·55	1·66	..	0·55	0·02	0·26
0·46	0·26	1·32	0·79	..	0·14	..	2·30	..	0·37	0·06	..	..
..	..	..	0·60	0·64	0·59	..	..	..	0·20	0·12	0·18	..
3·68	0·29	..	0·11	0·05	0·65	..	..	0·68	1·51	0·17	0·10	0·32
0·10	0·03	0·06	0·35	0·04	0·84	0·02	..	..	..	0·10	0·24	0·27
0·05	0·18	0·05	0·25	0·48	..	0·37	2·05	..	0·05	0·03	0·30	0·45
0·50	..	0·15	1·47	0·60	0·45	0·52	..	1·45	..	..	..	0·25
..	..	0·50	1·44	0·16	..	0·10	0·26	..	..	..	..	0·09
..	0·42	..	1·49	0·26	..	..	0·37	0·05	0·11	0·06	0·11	..
1·46	0·28	..	0·10	2·19	0·28	..	0·26	0·38	0·02	0·02	0·44	0·45
1·11	1·14	0·22	..	1·54	0·34	..	0·23	0·40	1·30	0·10	0·31	0·16
0·24	..	0·45	1·26	1·42	1·33	..	0·10	0·71	3·72	1·31	0·31	..
0·37	0·12	0·56	1·60	1·81	0·67	..	0·20	0·36	2·19	0·14	0·61	..
1·41	0·37	..	2·04	..	..	..	..	0·71	1·65	0·56	..	0·04
0·22	0·15	0·05	0·75	0·53	0·28	..	0·27	..	0·06	0·29	0·48	..
0·67	..	0·17	..	0·37	0·43	0·26	1·53	0·05	..	..	0·11	..
0·15	..	..	0·28	4·60	0·84	..	0·30	0·27	0·07	0·44	0·68	0·37
1·35	..	1·27	3·70	0·47	0·09	..	0·58	0·18	1·95	..	..	..
..	..	0·79	..	1·30	..	..	0·35	2·88	0·56	..	0·70	..
1·33	0·06	0·78	0·62	0·09	0·22	..	0·70	..	..	0·29	0·15	0·13
..	0·32	1·92	1·34	0·62	0·45	..	..	0·20	0·01	..	0·07	..
..	..	0·61	0·07	0·68	0·70	..	0·62	..	..	0·40	0·17	..
..	0·35	0·85	1·60	1·20	..	..	..	..	0·10	0·20	..	..
..	0·37	1·13	1·64	1·20	0·88	..	0·46	..	0·22	0·42	..	0·54
0·15	0·22	2·68	2·06	0·03	0·02	0·40	0·21	0·08	0·02	0·22	0·25	0·08
1·15	..	..	0·30	0·50	0·50	1·00	0·50	0·08	..	..	0·10	0·05
0·13	0·16	0·17	3·17	0·03	1·56	0·43	..	0·37	0·09	0·35	0·31	0·17
0·40	0·50	2·10	1·26	0·14	1·10	..	0·36	0·20	1·40	0·30	..	..
0·94	0·11	0·49	0·46	0·09	0·11	..	..	0·32	0·06	0·92	0·73	..
0·24	0·21	1·64	1·61	0·05	0·92	0·85	2·45	..	..	0·12	0·89	0·11
1·52	0·17	0·83	..	..	..	0·50	0·29	..	0·17	..	..	0·10
0·18	0·42	1·27	..	1·61	..	..	0·15	..	..	0·66	0·28	..
0·15	..	0·55	1·75	..	0·30	..	..	..	..	1·00	..	..
..	0·14	1·68	..	..	..	..	..	2·40	..	..	..	..
1·45	..	..	0·75	0·65	..	0·25	..	0·36	0·32	0·75	0·75	0·05
0·27	0·03	1·07	2·37	..	1·16	0·40	..	0·17	..	..	0·65	..
0·04	..	0·30	..	1·69	0·14	..	..	0·15	..	..	0·18	0·04
2·96	..	0·49	0·09	1·92	..	..	0·26	1·73	0·23	0·47	0·14	0·09
..	0·10	1·10	..	0·47	1·05	..	0·19	0·19	0·12	0·24	0·10	0·18
0·02	0·50	0·33	..	1·20	1·25	..	0·17	0·10	5·10	0·18	0·18	0·30
..	2·08	0·35	0·14	1·07	0·17	0·07	0·71	2·83	1·73	0·15	0·19	0·11
0·50	0·90	..	0·07	0·29	..	0·25	0·30	2·44	0·19	0·42	0·28	..
..	..	0·60	0·10	0·35	..	0·22	..	0·13	..	..	..	..
0·06	0·72	..	0·23	1·40	0·37	..	1·30	..	0·32	0·40	0·30	0·28
0·06	0·40	0·02	0·01	0·04	1·21	0·00	..	0·47	0·64	0·75	0·43	0·11
0·07	..	0·90	..	1·26	1·40	..	0·40	0·67	1·30	0·25	0·36	0·25
..	..	0·60	..	0·30	1·40	..	..	..	1·40	3·40	0·10	..
0·35	..	0·07	..	0·16	1·03	..	0·61	2·30	2·26	0·98	..	0·68
..	..	..	0·63	0·85	..	..	..	1·38	0·98	1·21	1·23	1·12
..	0·02	..	..	0·65	0·94	..	0·17	0·60	1·75	0·55	0·03	0·13

(a) Not reported.

DAILY RAINFALL RECORDED IN BENGAL

Division and district.	Station.	21	22	23	24	25	26	27
Presidency.								
24-Parganas ..	Saugar Island (Obsy.) ..	0·06	0·02	0·26	0·50	0·09	0·18	0·95
	Diamond Harbour ..	..	..	0·22	..	1·73	1·11	0·10
	Budge-Budge ..	0·05	0·03	0·02	0·17	0·21	0·90	0·29
	Canning Town	..	..	..	..	1·30	0·95	2·95
	Alipore (Obsy.)	0·16	..	0·04	0·42	0·38	0·42	0·56
	Barrackpore	0·34	..	0·18	..	0·12	0·31	0·81
	Dum Dum*							
	Baraset	..	..	..	0·15	0·50	..	0·10
	Basirhat	..	..	..	0·32	..	2·00	0·27
	Gosaba	..	..	..	0·37	..	1·84	0·57
Nadia ..	Ranaghat	0·12	..	0·18	0·18	0·35	0·66	0·64
	Krishnagar (Obsy.) ..	0·36	..	..	0·28	0·38	0·31	1·27
	Chuadanga	0·31	0·01	..	..	0·54	1·75	0·59
	Meherpur	..	..	0·18	..	1·26	1·36	0·48
	Kushtia	..	0·16	..	..	0·80	3·08	1·35
	Haringhata	..	0·12	..	0·28	0·14	0·48	1·30
Murshidabad ..	Kandi	0·22	..	0·23	0·19	1·19	0·52	1·21
	Berhampore (Obsy.) ..	..	0·22	..	0·14	0·33	2·70	1·51
	Lalbagh	..	0·26	..	..	0·20	2·98	1·70
	Azimganj*							
	Jangipur	..	..	..	..	0·50	2·37	1·35
	Lalgola	..	..	..	..	0·23	2·24	1·57
	Akriganj	..	..	..	..	0·50	3·14	1·69
	Patkabari	..	..	0·22	0·09	3·65	0·61	0·75
	Dumkal	..	..	..	0·09	0·36	1·84	2·31
	Kalyanganj (Ishanpur) ..	0·15	0·03	..	..	0·07	3·41	2·07
	Khargram	..	..	..	0·23	2·18	0·37	2·60
	Bharatpur	..	..	..	..	..	0·73	0·33
Jessore ..	Narail	..	..	0·20	0·12	0·20	0·22	0·68
	Jessore (Obsy.)	..	..	..	0·16	0·32	2·62	0·34
	Jhenida	..	..	..	0·13	3·20	0·54	0·10
	Magura	..	..	0·40	0·40	0·50	0·40	0·80
	Bongaon	..	..	..	0·15	0·30	1·63	1·77
Khulna ..	Satkhira (Obsy.)	0·04	0·01	0·03	0·36	0·13	0·38	1·11
	Bagerhat	0·10	0·21	0·50	0·35	0·30	0·40	1·50
	Khulna (Obsy).	0·02	0·01	0·21	0·11	0·44	0·11	0·51
	Kaliganj	..	0·10	0·13	0·11	0·35	1·85	0·87
	Nakipur	..	..	..	0·17	0·21	0·33	0·46
	Dumuria	..	..	0·15	0·23	0·18	0·10	0·15
	Rampal	..	..	0·27	0·17	0·38	1·20	0·12
	Kalaroa	0·08	0·03	..	0·29	1·83	0·78	0·46
	Paikgachha (Raruli) ..	..	..	0·40	0·13	0·25	0·40	0·47
	Mollahat	..	..	..	1·53	2·00	1·42	1·40
	Morelganj	0·76	0·85	0·75	0·65	0·45	1·55	0·35
	Islamkati	..	..	..	0·34	0·22	..	1·35
Burdwan.								
Burdwan ..	Kalna	0·02	0·11	0·42	0·15	0·09	1·00	0·24
	Burdwan (Obsy.)	0·15	0·10	0·18	0·74	0·59	0·22	2·09
	Katwa	..	0·05	..	0·22	0·55	0·43	0·65
	Asansol (Obsy.)	0·05	0·23	..	0·32	0·05	0·27	2·85
	Mankar	0·12	0·15	0·27	0·29	0·31	0·61	0·75
	Mangalkot	0·04	0·04	..	0·28	0·11	0·10	..
	Royna	..	..	0·60	0·65	..	0·27	0·10
	Monteswar	..	0·70	..	0·30	0·50	0·50	1·45
Birbhum ..	Suri	0·21	0·38	..	0·10	0·59	3·85	0·43
	Hetampur	0·20	0·40	..	0·41	0·48	1·30	1·36
	Rampurhat	0·05	..	..	0·25	0·10	6·10	1·90
	Bolpur	..	..	..	0·33	..	0·14	0·40
	Murarai	..	..	..	1·35	1·23	3·30	..
	Labpur	..	..	..	0·50	0·20	0·42	0·54
	Nalhati*							
	Mayureswar*							

* Not reported.

FOR THE MONTH OF JULY 1936.

28	29	30	31	Number of rainy days.	Average number of rainy days.	Total rainfall for the month.	Normal rainfall for the month.	Heaviest rainfall during the month.	Total rainfall from 1st June to 31st July 1936.	Normal rainfall from 1st June to 31st July 1936.
0·04	0·53	..	..	18	15·8	8 88	14 65	1 29	28·30	26·19
0·40	..	0·20	0·50	21	17·0	15·16	14·78	2·51	30·64	26·46
0·04	1·30	0·07	0·07	15	17·4	11·69	13·85	3·08	27·02	26·64
1·12	2·50	..	..	15	16·3	21·09	12·22	3·23	34·02	24·09
..	1·71	0·01	..	16	17·8	10·73	12·51	3·36	26·73	24·41
1·18	0·52	0·04	..	21	16·1	14·19	12·23	1·78	22·78	22·65
					16·1		12·26			23·64
..	0·25	0·20	0·45	15	16·0	4·55	11·44	0·50	11·05	21·97
1·25	0·96	0·15	0·05	16	15·9	15·76	13·58	2·65	24·61	25·59
1·76	..	0·19	2·14	16	(a)	17·07	(a)	2·70	27·55	(a)
1·37	0·20	0·05	0·07	18	14·9	8·73	10·75	1·63	14·21	20·78
1·01	0·07	0·15	..	20	15·9	12·86	11·08	3·68	20·59	21·74
1·63	..	0·16	..	17	15·3	10·04	10·24	1·75	18·77	20·83
0·12	0·33	0·05	..	18	15·7	15·09	10·56	4·10	25·79	20·86
1·12	0·35	..	..	19	15·1	17·69	10·15	3·08	26·85	21·00
0·20	1·45	0·71	..	15	10·4	7·65	7·07	1·45	16·34	14·34
0·39	..	..	..	17	15·6	10·50	11·72	1·49	22·80	22·23
0·34	0·64	0·58	..	21	15·9	13·85	10·85	2·70	23·28	20·89
0·85	1·80	0·64	0·10	22	15·7	16 80	12·07	2·98	25·25	22·58
					15·6		10·91			21·22
0·07	2·17	0·04	..	17	15·5	19·51	11·18	3·72	26·29	21·53
0 27	1·54	..	..	20	14·8	15·84	10·94	2·24	23·39	21·00
0·49	0·96	..	..	15	14·7	15·88	10·77	3·14	25 66	22·12
0·52	0·65	..	..	18	12·6	12·67	9·92	3·65	19·04	18·57
0·07	0·40	0·06	..	13	15·2	10·51	10·52	2·31	21·43	21·09
0·45	0·71	0·66	..	20	15·3	18·71	10·09	4 60	26·26	22·07
1·90	1·90	..	0·10	19	(a)	21·75	(a)	3·70	30·42	(a)
0·38	0·21	0·30	0·29	17	(a)	13·62	(a)	3·16	21·99	(a)
2·35	0·10	0·30	..	19	16·0	12·24	10·69	3·47	21·19	22·73
0·11	0·78	0·09	..	18	17·3	12·04	12·20	2·62	24·04	24·87
0·05	0·02	..	..	16	15·8	10·94	10·38	3·20	20·40	22·89
1·40	0·40	0·13	..	18	16·1	11·58	10·92	1·60	19 89	22·40
0·04	0·79	..	..	18	15·7	14·00	11·21	1·77	19 65	22·02
1·11	1·88	0·21	0·31	19	21·0	14·89	11·37	2·68	23 55	25·27
1·10	1·00	0·10	..	20	19·6	12·51	11·76	1·50	22·39	28·90
0·77	0·62	0·27	0·15	24	19·8	14·10	11·05	3·17	25·26	24·93
1·35	0·16	..	0·16	24	17·1	20·61	17·69	4·50	33 30	32·31
0·35	1·38	0·24	.	17	15·2	8·77	12·76	1·38	21 88	26·07
0·65	0·75	0·45	0·10	23	17·8	16·55	15·09	3·25	26·37	28·15
0·20	0·80	0·52	1·95	20	18·2	10·29	14·14	1·95	21·90	27·04
2·95	0·20	0·01	1·55	17	17·6	14·19	12·75	2·95	24 95	24·22
0·90	1·62	1·00	0·25	18	18 5	13·79	14·76	1·80	25·10	27·47
1·40	..	2·32	..	11	17·4	16·52	16·28	2·40	31·12	30·77
0·95	0·75	0·74	0·65	24	19·2	16·05	17·45	1·55	31·13	33·26
0·67	1·15	0·16	0·10	17	16·8	15·98	15·06	5·19	25·77	27·01
0·21	0·20	..	..	16	14·7	7·43	11·33	1·69	14·30	21·65
1·06	0·07	0·05	0·88	22	15·7	20·17	12·57	4·36	29·21	22·81
..	6·05	0·10	0·10	21	15·3	9·79	11·13	2·45	18·89	21·15
2·70	0·15	0·02	1·37	22	17·1	19·41	13·75	5·10	33·84	25·47
0·11	0·19	0·85	0·15	28	14·2	19·15	11·03	2·83	31·50	20·63
0·09	0·02	1·03	..	16	11·9	9·22	8·03	2·44	15·12	20·89
1·70	0·45	0·50	.	16	14·9	6·91	11·84	1·70	20·49	22·70
0·20	..	..	..	20	11·9	15 28	9·17	1·98	22·67	21·78
1·00	0·19	0·17	0·10	23	17·2	15·71	12·88	3·85	24 84	23·61
1·12	2·20	.	0·20	23	16·8	18·25	12·74	2·20	25·37	23·09
0·20	0·30	..	0·15	15	15·7	17·83	11·56	6·10	30·34	22·13
..	..	..	..	14	14·7	12·28	11·14	2·35	21·03	20·57
0·58	1·12	..	1·10	15	15·8	18·46	14·81	3 30	31·17	27·04
0·08	0·20	..	..	14	15·0	7·78	11·45	1·75	14 94	21·94
					(a)		(a)			(a)
					(a)		(a)			(a)

(a) Not ascertained.

DAILY RAINFALL RECORDED IN BENGAL

Division and district.	Station.	1	2	3	4	5	6	7
Burdwan—*concld.*								
Bankura ..	Bankura (Obsy.)	0·03	..	1·47	0·94	..	0·09	1·05
	Vishnupur	..	0·01	0·86	1·35	..	0·05	0·10
	Maliara	..	0·49	1·15	2·08	..	..	0·06
	Khatra*							
	Indas	0·07	0·18	0·68	0·25	..	3·56	0·13
	Kotalpur	..	0·05	0·62	0·07	..	0·45	1·03
	Onda	0·05	..	1·70	0·65	..	1·32	0·23
	Gangajalghati	..	0·12	0·76	0·80	..	..	0·20
	Raipur	0·15	0·17	1·59	0·18	1·55	0·28	..
	Sonamukhi	0·41	2·30	0·23	..	1·56	0·10	0·65
	Taldangra	0·05	..	1·11	2·45	..	0·21	..
	Saranga	0·59	0·34	1·15	0·56	..	0·65	0·65
	Indpur	0·14	0·30	0·40	1·08	0·07	0·21	0·40
	Arhara	..	0·46	0·22	..	2·12	..	0·23
	Barjora	0·17	2·10	0·58	0·03	..	0·06	0·89
	Simlapal	..	0·50	0·55	..	1·50	0·60	0·10
	Mejia	0·04	0·11	0·56	1·05	..	0·05	0·60
	Siromanipur	..	0·30	0·70	0·08	1·00	..	0·30
	Palasdanga	..	0·13	1·00	0·22	0·03	1·17	0·06
	Chatna	..	1·15	0·63	..	1·22	0·40	0·35
	Ranibandh	0·02	2·15	1·30	0·30	0·35	0·25	0·55
	Saltora	0·04	0·44	0·85	..	0·32	..	0·05
	Joypur	..	0·04	1·64	0·60	..	..	0·18
	Ambikanagar*							
	Jairampur	0·25	0·15	..	1·90	0·01	0·09	0·03
Midnapore ..	Contai	1·09	..	1·03	..	0·01	0·06	0·28
	Tamluk	..	1·01	..	..	1·39	0·32	0·18
	Midnapore (Obsy.) ..	0·25	..	0·71	0·18	..	1·25	0·59
	Ghatal	..	0·64	..	..	..	1·32	0·26
	Kukrahati	1·05	4·83	..	..	0·17	0·59	..
	Amlagura	0·22	0·20	0·84	..	..	1·61	0·03
	Panskura	..	0·40	0·35	..	..	0·90	0·15
	Dantan	..	0·70	..	0·10	..	..	..
	Chandrakona*							
	Pachet	..	..	0·98	..	1·38	..	0·05
	Bhagwanpur	0·20	0·75	..	..	0·56	..	..
	Kashiary	..	..	..	..	..	0·10	..
	Nayabasan	0·25	..	1·05	..	0·81	..	..
	Silda (Belpabari)	0·05	0·60	..	0·15	0·27	0·10	..
	Goaltore	0·20	0·55	1·48	..	..	0·75	..
	Salboni	0·80	1·15	..	..	0·35	..	..
	Narayangarh	..	0·80	..	..	..	0·50	0·30
	Ramnagar	..	..	..	0·78	0·10	0·13	0·02
	Mohanpur	0·30	0·45	0·10	0·20	0·30	..	0·10
	Jenka (Khajri)	..	..	1·95	0·10	0·07	0·35	0·50
	Nandigram	..	0·35	..	0·13	0·09	0·90	..
	Moyna	0·20	0·25	0·14	..	..	0·35	..
	Pingla*							
	Narajole*							
	Kolaghat (Dainan) ..	0·02	0·02	0·65	0·01	..	0·20	0·16
	Balichak	0·02	0·01	0·30	..	..	..	0·07
	Jhargram	..	1·06	..	0·24	0·40	..	..
	Kharagpur	..	..	..	..	0·37	0·74	0·16
Hooghly ..	Serampore	0·27	0·30	0·10	..	0·48	0·74	0·40
	Hooghly	0·02	0·22	0·63	..	..	0·07	2·37
	Arambagh	0·05	..	0·60	..	..	0·35	0·57
	Chanditala*							
	Tantulia	0·60	..	..	..	0·50	2·92	..
	Boinchee	0·39	0·03	1·13	0·09	0·15	0·82	2·79
	Khanakul	0·13	..	..	0·80	0·62	1·00	..
	Tarakeswar*							
Howrah ..	Howrah	0·05	..	0·66	..	0·24	1·05	0·90
	Uluberia	0·08	0·65	0·45	..	0·15	0·07	0·40
	Amta	0·03	0·45	0·35	0·05	..	0·95	0·05
Rajshahi.								
Rajshahi ..	Boalia (Obsy.)	..	0·46	0·36	0·11	..	0·10	3·00
	Nator	0·50	0·10	0·08	..	1·45	..	0·90
	Naugaon	..	1·15	0·20	..	..	0·52	0·37
	Lalpur	0·47	0·07	..	..	0·32	0·39	..
	Manda	..	..	..	..	0·23	2·33	2·00
	Mahadebpur	1·00	0·05	..	..	0·10	0·24	0·15
	Tanor*							
	Chaugram	..	0·32	..	0·42	0·24	0·76	..
	Joari	1·00	..	..	..	1·60	0·30	..
	Badalgachi	1·30	0·10	..	0·30	..	..	0·30

* Not reported.

FOR THE MONTH OF JULY 1936.

8	9	10	11	12	13	14	15	16	17	18	19	20
0·05	..	0·39	0·64	0·05	0·11	..	..	1·42	2·45	0·01	0·14	0·30
0·09	0·81	0·47	1·14	0·30	..	0·07	0·01	0·73	2·72	0·20	0·58	0·09
0·42	..	0·76	..	0·14	1·32	0·74	..	0·32	1·86	1·44	..	0·29
0·14	0·08	0·42	0·02	0·20	..	..	1·38	1·35	4·87	1·02	0·04	..
0·21	0·65	..	1·40	..	..	..	0·40	0·75	2·70	1·07	0·20	0·02
..	0·16	1·36	1·23	0·92	..	..	..	2·58	3·30	0·07	0·06	0·17
0·34	..	1·76	0·11	0·25	2·92	..	..	1·80	3·35	1·35	0·28	..
0·04	0·65	0·17	2·09	0·88	0·01	..	..	0·66	1·67	0·15	0·33	0·08
1·27	2·70	0·25	..	..	0·26	1·20	2·44	3·85	0·80	0·20	..	..
0·02	..	0·03	0·51	0·21	0·01	..	..	1·12	2·81	0·04	..	..
0·83	0·10	0·12	0·20	..	..	..	0·72	0·44	..	..	0·38	..
0·16	0·05	1·15	0·04	0·21	0·39	..	0·04	0·27	1·75	0·07	0·02	0·61
0·06	..	..	0·45	1·13	..	..	0·78	0·74	0·37	0·80	0·13	0·41
..	0·68	0·75	..	..	0·64	..	0·07	0·80	1·32	1·36	1·00	0·17
0·10	0·40	0·40	0·40	..	..	0·05	1·10	1·30	0·35	..	0·03	0·02
0·03	0·08	..	..	0·65	1·30	0·26	..	0·25	0·50	0·75	0·50	..
0·64	..	1·85	0·23	..	..	0·30	0·72	0·60	0·50	0·69	0·03	..
0·95	..	0·35	0·12	..	0·88	..	0·40	1·05	1·50	2·76	0·28	0·26
0·02	0·09	0·06	0·08	0·10	..	..	1·10	1·15	0·28	0·70	0·73	0·32
0·26	..	1·50	0·65	0·83	0·23	0·68	0·60	3·67	..	0·57	0·23	0·17
0·22	0·10	..	0·43	1·50	..	..	0·56	0·88	0·46	0·10	0·89	0·06
..	1·05	0·22	1·90	..	..	..	..	0·15	0·50	0·30	0·10	..
0·02	0·22	0·60	0·93	0·28	..	0·02	1·08	..	..	..	..	0 03
0·27	..	0·17	2·05	0·76	..	..	..	..	..	0·55	0·48	0·93
..	..	1·11	..	0·16	..	..	1·92	0·20	1·65	0·40	0·03	..
1·80	0·14	0·14	0·16	0·28	0·28	..	0·14	2·44	0·70	0·28	..	0·01
0·10	0·26	0·18	0·02	..	..	..	..	0·09	1·15	..	0·28	0·10
..	..	..	1·55	0·70	0·11	..	..	..	1·30	1·20	0·10	0·09
0·05	3·54	1·60	1·18	0·57	0·19	..	..	0·13	0·54	0·11	0·05	0·12
2·20	0·90	0·60	0·80	..	0·10	0·10	..	0·07	1·20	1·40	0·08	0·40
..	1·98	..	1·00	0·10	..	0·03	0·02	0·45	0·16	0·34	0·06	0·17
..	..	0·44	0·52	0·05	..	..	..	0·28	..	0·91	0·08	0·17
0·67	..	..	0·66	0·03	0·50	0·15	0·13	0·04	2·46	0·11	..	..
..	1·26	4·06	0·65	..	0·30	0·10	..	..	0·10	0·90	0·40	0·40
0·68	0·94	..	0·64	0·94	0·20	..	..	0·39	..	..	0·40	0·08
0·80	0·13	..	0·55	..	..	..	0·38	1·56	..	0·32	0·31	0·10
0·13	0·48	0·23	0·45	..	0·25	..	..	0·17	1·90	..	0·07	..
..	0·40	..	..	..	..	..	2·02	0·40	0·20	0·04	0·03	0·13
..	0·18	0·80	0·70	0·98	..	0·20	..	..	..	..	0·39	0·30
..	0·05	2·96	0·02	..	..	0·18	..	0·04	0·40	1·15	0·62	0·16
0·05	0·08	0·20	1·00	0·60	0·16	0·05	..	0·28	0·05	..	0·06	0·10
0·12	0·07	3·30	0·87	0·09	..	1·50	..	0·15	..	1·24	0·25	0·08
0·02	..	2·02	0·23	..	0·63	0·05	0·02	0·55	..	0·25	0·07	0·03
..	..	..	2·45	0·25	..	..	0·50	..	1·70	..	..	2·00
0·34	0·03	1·90	1·40	0·04	0·20	0·41	0·01	0·07	0·07	1·92	0·11	0·50
0·93	..	1·95	0·24	0·06	1·36	0·01	0·65	0·10	0·82	0·16	..	0·09
..	0·50	1·40	0·58	..	..	0·50	2·60	0·20	0·06	0·13	0·02	0·21
0·53	0·12	0·25	0·12	1·19	..	..	0·30	0·60	0·03	0·11	..	0·25
0·73	1·20	1·00	0·35	0·14	..	0·53	..	..	0·61	0·05	..	0·02
0·09	0·74	0·02	2·24	..	0·88	..	1·12	..	..	0·37	..	0·18
1·43	0·90	0·05	0·12	0·05	0·01	..	..	0·02	0·63	1·60	..	0·20
0·42	..	..	..	1·50	1·85	..	..	0·25	..	..	..	..
0·06	0·04	0·09	0·85	0·12	0·40	0·45	..	0·01	1·14	0·50	..	0·20
..	..	0·80	0·05	0·15	..	0·05	0·09	0·09	0·72	0·08	0·70	..
0·08	0·11	0·01	3·30	0·65	0·17	0·37	..	0·06	0·20	0·55	..	0·62
..	..	0·52	3·84	0·90	0·34	..	1·25	0·07	0·85	1·95	..	0·30
..	0·07	0·77	2·65	..	0·83	..	2·70	..	..	3·80	..	0·32
0·15	0·40	0·05	..	1·40	0·08	..	..	1·25	0·20	0·25	0·05	..
0·12	0·35	..	0·75	..	0·07	..	3·15	0·02	0·13	0·05	0·06	..
..	1·40	0·10	..	0·50	2·10	0·07	0·35	..	0·38	..	0·40	..
..	..	..	..	1·02	..	..	0·97	..	..	1·03	..	..
..	..	..	..	0·90	0·47	..	..	3·50	..	0·42	..	..
..	1·30	2·25	0·62	..	..	1·20	1·50	2·55	0·17	..	..	..
2·26	0·72	..	1·19	..	..	2·72	..	2·86	0·54	..	0·28	..
..	0·10	0·15	0·30	0·08	0·30	..	1·90	..	0·25	..	..	..
0·40	0·50	2·20	..	..	1·30	0·30	1·30	0·50	..	..	..	..

DAILY RAINFALL RECORDED IN BENGAL

Division and district.	Station.	21	22	23	24	25	26	27
Burdwan—*contd.*								
Bankura ..	Bankura (Obsy.) ..	0·10	0·28	..	0 34	0·04	..	0·95
	Vishnupur	0·29	0·37	0·04	0·05	0·16	0·56	0·20
	Maliara	0·13	0·11	..	0·38	0·13	2·81	0·23
	Khatra*							
	Indas	0·12	0·08	0·02	0·28	..	0·02	0·70
	Kotalpur	..	..	0·35	0·10	0·07	0·15	0·62
	Onda	0·15	0·06	0·12	0·45	0·27	0·15	0·61
	Gangajalghati	0·11	..	..	0·35	0·36	0·76	0·46
	Raipur	0·01	0·06	0·06	0·32	0·35	0·24	3·05
	Sonamukhi	0·04	0·15	0·32	0·07	0·02	1·04	1·24
	Taldangra	0·09	0·06	0·70	0·60	0·28	1·29	1·02
	Saranga	..	..	0·15	0·20	0·29	1·09	0·79
	Indpur	0·12	0·16	0·35	0·65	0·43	0·03	2·68
	Arhara	0·06	..	..	0·07	..	0·43	1·51
	Barjora	..	..	..	..	0·15	..	0·10
	Simlapal	..	0·50	0·20	0·40	0·20	0·30	2·60
	Mejia	..	..	0·20	0·04	0·05	0·25	1·35
	Siromanipur	0·21	0·45	..	0·42	0·24	..	0·69
	Palasdanga	..	0·05	..	0·17	0·14	0·02	0·40
	Chatna	0·31	0·04	0·15	0·04	0·80	0·69	1·58
	Ranibandh	0·37	0·17	0·63	0·22	0·11	0·90	2·10
	Saltora	0·17	..	0·46	0·07	0·08	3·60	1·00
	Joypur	..	0·50	..	0·34	0·04	0·50	0·25
	Ambikanagar*							
	Jairampur	0·06	0·05	0·44	0·73	0·07	0·60	0·66
Midnapore ..	Contai	0·12	..	0·04	0·39	0·80	0·25	1·35
	Tamluk	..	0·13	0·35	0·25	1·15	0·70	0·08
	Midnapore(Obsy.) ..	0·21	..	0·07	0·36	0·29	0·23	1·22
	Ghatal	..	..	0·33	0·19	0·13	0·10	..
	Kukrahati	0·09	..	0·40	0·20	1·63	0·39	..
	Amlagura	0·48	..	0·30	0·50	0·22	0·65	0·56
	Panskura	..	0·10	0·30	0·40	0·30	0·25	0·04
	Dantan	0·11	0·10	0·70	0·20	0·02	0·03	0·04
	Chandrakona*							
	Pachet	0·25	..	..	0·66	0·10	1·14	1·00
	Bhagwanpur	0·12	..	..	0·78	0·08	0·94	0·05
	Kashiary ..	1·18	0·68	2·25	..	0·30	2·10	..
	Nayabasan	0·50	0·12	0·04	0·13	0·18	..	0·27
	Silda (Belpabari)	..	0·02	0·10	0·70	0·25	2·58	2·10
	Goaltore	..	0·15	0·65	0·15	0·48	0·65	1·14
	Salboni	..	..	0·30	0·25	0·30	1·39	..
	Narayangarh	..	..	0·72	0·47	..	..	1·72
	Ramnagar	0·21	0·07	0·48	0·55	1·71	0·64	0·11
	Mohanpur	..	0·20	0·10	0·08	..	..	0·05
	Jenka (Khajri)	0·20	0·02	0·08	0·28	0·32	0·32	0·85
	Nandigram	0·20	0·17	..	0·55	2·75	0·15	..
	Moyna ..	0·60	..	..	0·75	0·35	3·05	0·15
	Pingla*							
	Narajole*							
	Kolaghat (Dainan) ..	0·03	0·01	..	0·15	0·25	0·50	0·28
	Balichak	0·09	..	0·11	0·67	0·25	0·40	0·01
	Jhargram	..	0·20	1·00	0·09	0·70	0·56	0·90
	Kharagpur	..	..	0·76	0·24	..	0·24	1·31
Hooghly ..	Serampore	0·01	..	..	0·38	0·21	0·02	0·08
	Hooghly	0·27	0·09	0·04	0·43	0·24	0·24	0·57
	Arambagh	0·11	..	0·21	0·02	0·23	0·05	1·05
	Chanditala*							
	Tentulia	..	0·25	..	0·15	0·17	0·62	1·10
	Boinchee	0·12	0·06	0·26	0·19	0·26	0·12	1·39
	Khanakul	..	0·05	0·13	0·10	..	0·44	0·75
	Tarakeswar*							
Howrah ..	Howrah	0·06	..	0·02	0·37	0·43	0·16	0·64
	Uluberia	0·15	..	..	0·52	0·48	0·50	0·12
	Amta	0·22	0·04	0·20	..	0·38	0·95	0·13
Rajshahi.								
Rajshahi ..	Boalia (Obsy.)	..	..	..	..	0·25	3·10	2·15
	Nator	..	..	..	0·27	1·95	2·45	0·80
	Naugaon	..	..	..	..	..	1·45	2·50
	Lalpur	..	..	..	..	1·15	2·98	1·15
	Manda	..	..	0·23	..	0·56	1·00	0·50
	Mahadebpur	..	..	..	..	1·45	1·55	0·60
	Tanor*	..	..	..	..	..	..	..
	Chaugram	..	1·42	..	0·14	0·56	2·86	1·27
	Joari	..	..	..	0·20	2·00	1·65	0·35
	Badalgachi	..	..	..	0·60	3·60	1·00	..

* Not reported.

FOR THE MONTH OF JULY 1936.

28	29	30	31	Number of rainy days.	Average number of rainy days.	Total rainfall for the month.	Normal rainfall for the month.	Heaviest rainfall during the month.	Total rainfall from 1st June to 31st July 1936.	Normal rainfall from 1st June to 31st July 1936.
0·75	0·86	0·40	0·35	18	15·4	13·21	13·11	2·45	27·33	24·20
0·96	0·13	0·69	0·53	20	16·2	13·56	11·68	2·72	26·09	21·70
2·04	0·65	..	0·20	21	16·0	17·75	11·64	2·81	32·80	21·70
					16·0		12·13			23·14
1·49	0·02	0·73	0·68	18	14·9	18·53	11·25	4·87	30·86	20·61
0·60	..	4·60	2·35	18	13·1	18·46	12·89	4·60	27·33	22·91
0·91	0·60	0·46	0·77	21	13·7	18·35	9·68	3·30	32·40	17·88
0·88	2·22	..	0·62	21	14·6	19·80	11·37	3·35	33·24	21·99
0·90	0·16	..	0·32	21	15·9	16·12	12·22	3·05	29·77	22·40
0·40	0·48	0·84	0·41	23	15·0	23·23	14·23	3·85	33·09	22·20
3·71	0·79	0·64	0·73	16	13·0	18·48	10·64	3·71	38·89	19·04
0·07	0·03	..	2·60	19	14·2	11·95	9·93	2·60	22·56	20·96
1·40	0·99	0·08	0·37	22	12·6	14·62	10·19	2·68	28·74	18·97
2·40	0·31	..	0·04	16	(*n*)	12·72	(*n*)	2·40	25·27	(*n*)
0·19	3·98	0·71	0·21	18	(*n*)	15·96	(*n*)	3·98	26·63	(*n*)
0·35	0·35	0·60	0·40	22	(*n*)	13·30	(*n*)	2·60	31·13	(*n*)
0·50	1·00	0·05	0·70	17	(*n*)	10·87	(*n*)	1·35	21·92	(*n*)
0·60	0·50	0·74	2·50	21	(*n*)	15·19	(*n*)	2·50	25·00	(*n*)
2·20	0·35	0·30	1·40	21	(*n*)	16·19	(*n*)	2·76	28·62	(*n*)
2·42	0·48	0·05	0·21	20	(*n*)	15·15	(*n*)	2·42	28·41	(*n*)
3·10	6·59	0·46	0·13	28	(*n*)	23·09	(*n*)	3·10	37·78	(*n*)
4·05	0·05	..	2·35	18	(*n*)	18·73	(*n*)	4·05	25·78	(*n*)
1·96	0·16	2·10	0·45	18	(*n*)	13·60	(*n*)	2·10	27·31	(*n*)
					(*n*)		(*n*)			(*n*)
1·00	0·26	0·28	1·11	17	(*n*)	11·23	(*n*)	1·90	31·13	(*n*)
..	..	0·16	..	16	15·0	10·79	13·26	2·05	32·63	23·74
0·83	..	..	..	16	13·8	12·27	12·41	1·92	23·66	23·03
0·33	1·25	0·04	..	22	15·9	13·23	12·53	2·44	29·62	23·03
1·30	2·17	0·04	0·07	15	15·2	8·73	12·20	2·17	22·50	22·33
0·46	..	0·19	0·03	16	15·5	15·08	13·49	4·83	28·22	25·80
0·45	0·33	0·35	1·80	23	15·3	16·62	11·79	3·54	34·19	22·13
0·70	1·05	..	0·07	20	15·3	12·86	11·79	2·20	27·58	22·71
0·01	0·16	..	0·11	15	13·2	6·59	10·85	1·98	24·72	21·29
					13·2		12·15			24·73
..	..	..	..	12	13·6	8·01	12·46	1·38	20·17	24·28
0·04	..	..	0·44	14	15·3	8·71	10·90	2·46	21·08	25·16
..	1·10	..	..	16	11·5	15·88	10·28	4·06	43·83	20·92
0·12	0·52	0·26	0·64	19	12·4	9·16	10·23	1·05	23·11	20·88
0·14	2·20	0·80	0·16	21	14·5	14·37	10·69	2·58	26·56	21·36
0·09	0·26	0·09	0·41	19	15·1	10·73	11·18	1·90	21·28	21·99
0·53	0·05	0·40	0·26	15	13·8	9·00	10·54	2·02	20·65	22·84
0·12	0·10	..	0·40	16	14·9	8·68	12·95	1·72	20·46	26·22
0·27	0·04	..	0·02	16	11·0	10·71	9·64	2·96	32·38	23·51
..	..	..	..	14	13·6	4·51	12·40	1·00	16·52	23·41
..	0·02	..	..	16	15·5	12·73	10·85	3·30	31·00	25·70
..	..	..	..	13	13·5	9·16	10·69	2·75	21·93	24·47
1·50	..	..	..	15	14·3	14·24	12·18	3·05	43·33	23·46
					13·2		10·79			22·62
					14·0		12·21			26·83
0·08	1·50	0·01	..	16	(*n*)	10·87	(*n*)	1·92	23·62	(*n*)
1·35	0·62	..	0·28	16	(*n*)	10·55	(*n*)	1·95	23·69	(*n*)
0·32	2·12	0·24	0·24	20	(*n*)	14·27	(*n*)	2·60	32·33	(*n*)
0·81	..	..	0·05	17	(*n*)	8·18	(*n*)	1·31	21·49	(*n*)
1·41	0·32	..	0·02	17	16·5	9·37	12·05	1·41	18·10	21·99
0·18	1·22	0·08	..	16	15·9	12·13	10·97	2·37	20·71	20·84
1·56	1·18	0·39	0·07	16	15·6	11·45	12·51	1·60	22·70	22·41
					(*n*)		(*n*)			(*n*)
0·40	..	..	..	13	(*n*)	10·73	(*n*)	2·92	18·61	(*n*)
0·77	0·19	0·15	0·05	21	(*n*)	12·82	(*n*)	2·79	23·44	(*n*)
2·90	0·70	..	..	14	(*n*)	10·35	(*n*)	2·90	19·16	(*n*)
					(*n*)		(*n*)			(*n*)
0·05	1·12	0·11	0·06	18	17·0	12·04	12·14	3·30	28·21	23·35
0·25	1·00	..	0·22	20	17·0	15·06	12·48	3·84	35·35	23·68
0·04	2·50	0·24	0·02	16	15·1	17·74	12·47	3·80	31·94	25·01
0·25	0·15	..	0·10	17	15·0	13·86	10·81	3·10	28·29	21·98
0·02	..	..	0·08	13	16·1	13·30	12·22	3·15	19·84	23·32
0·60	1·17	..	0·38	16	15·3	13·64	11·92	2·50	18·88	24·68
0·29	..	..	..	10	14·0	9·84	11·41	2·98	17·45	22·33
1·50	..	..	0·50	13	14·1	14·14	12·38	3·50	18·38	23·37
2·21	..	0·19	..	16	15·0	17·19	11·07	2·65	23·04	23·77
..	..	..	..	..	14·8	..	10·63	..	..	20·98
0·64	..	..	1·84	18	(*n*)	21·04	(*n*)	2·86	35·08	(*n*)
0·15	..	0·05	..	14	(*n*)	10·38	(*n*)	2·00	24·43	(*n*)
4·20	1·10	..	..	16	(*n*)	19·00	(*n*)	4·20	23·10	(*n*)

(*n*) Not ascertained.

DAILY RAINFALL RECORDED IN BENGAL

Division and district.	Station.	1	2	3	4	5	6	7
Rajshahi.								
Dinajpur ..	Nithpur	..	..	0·48	..	..	0·12	0·90
	Nawabganj	..	2·75	0·75	0·09	0·55	0·10	0·39
	Gangarampur	..	0·63	..	..	0·12	0·20	0·42
	Itahar	..	0·12	1·01	..	0·40	0·09	0·63
	Raiganj	..	..	0·40	..	..	..	0·25
	Dinajpur (Obsy.)	..	..	1·05	..	..	1·94	0·08
	Balurghat	..	..	0·95	0·45	..	0·14	0·40
	Thakurgaon	..	..	0·32	..	..	1·38	0·30
	Setabganj	..	..	0·18	0·08	0·12	0·35	0·18
	Ramganj*							
	Atwari	..	..	..	6·25	..	0·15	..
	Birganj	..	0·40	0·17	0·07	0·80	0·10	0·78
	Parbatipur	..	..	0·68	1·13	0·79	..	0·80
	Patnitola	0·94	..	..	..	..	0·53	..
	Sapahar	..	..	0·69	..	..	1·37	0·07
Jalpaiguri ..	Jalpaiguri (Obsy.)	..	..	0·11	0·02	1·70	1·95	0·70
	Alipur Duars	..	..	1·05	0·49	0·62	..	1·04
	Falakata	..	..	0·16	0·08	..	1·69	0·28
	Debiganj	..	0·09	0·07	0·05	..	1·33	0·07
	Buxa(a)	..	..	..	..	..	..	..
	Kalchini	..	..	0·21	0·36	2·09	0·26	0·31
	Kumargram*							
Darjeeling ..	Siliguri	..	0·01	0·74	0·82	0·34	3·06	2·15
	Darjeeling (Obsy.)	..	..	0·06	0·40	0·88	0·66	2·85
	Kalimpong (Obsy.)	..	..	1·23	1·47	0·10	0·91	1·35
	Mongpoo	..	..	0·26	1·28	0·53	0·65	2·87
	Kurseong	..	..	..	..	0·33	3·34	3·37
	Pedong	..	0·09	1·00	1·78	2·04	1·89	0·80
Rangpur .	Bhawaniganj (Gaibandha)	..	..	0·53	0·06	0·35	1·20	2·79
	Rangpur (Obsy.)	..	..	0·90	..	..	0·48	0·97
	Pirganj	..	1·50	..	..	..	0·52	0·10
	Kurigaon	..	..	0·30	0·12	0·25	0·13	0·76
	Gobindganj	..	4·30	..	..	0·50	0·70	0·60
	Bagdogra (Nilphamari)	..	0·52	0·05	0·22	3·02	0·56	0·90
	Ulipur	..	..	..	0·17	..	2·75	3·83
	Sunderganj	..	..	0·73	..	0·05	0·98	2·07
	Saidpur	0·25	0·30	..	..	2·57	0·21	1·26
Bogra ..	Sherpur	..	3·94	0·92	..	0·41	2·20	1·24
	Nowkhilla	1·18	0·16	0·32	..	1·99	0·62	..
	Bogra (Obsy.)	..	0·44	0·69	..	..	2·10	0·14
	Panchbibi	..	2·00	0·12	0·04	..	0·16	0·46
	Khetlal*							
	Adamdighi	1·40	..	0·19	..	0·53	..	..
	Dubchanchia	..	0·17	0·40	..	0·43	0·48	0·32
Pabna ..	Shazadpur	..	0·22	0·33	..	0·94	0·65	0·46
	Pabna	..	0·85	0·10	0·04	..	0·24	0·85
	Sirajganj (Obsy.)	..	1·76	..	0·35	0·12	0·30	1·82
	Iswardi	..	0·72	0·32	0·70	..	0·50	0·10
Malda ..	Malda (Obsy.)	..	0·08	0·15	0·24	0·16	..	1·36
	Chanchal	..	..	1·18	0·25	..	1·46	4 50
	Gazol	..	0·38	0·30	..	1·60	1·30	0·60
	Sibganj	1·00	0·30	..	0·70	0·06	..	0·36
	Gomastapur	..	..	1·65	0·26	..	0·95	..
	Nawabganj	0·22	0·65	0·75	..	..	0·22	0·43
Dacca.								
Dacca	Munshiganj	..	2·06	0·09	0·14	0·11	0·48	0·32
	Dacca	..	0·75	0·49	..	0·29	0·36	2·38
	Nawabganj	..	0·65	..	0·18	.	.	1·30
	Narayanganj (Obsy.)	..	0·62	0·07	0·06	0·02	0·07	2·77
	Narsingdi	..	4·15	0·42	0·10	..	..	..
	Manikganj	..	1·13	0·09	0·15	..	..	1·17
	Joydebpur	1·84	0·30	..	..	0·08	0·88	0·05
	Kapasia	..	2·50	0·12	..	0 02	0·06	0·09

* Not reported.

(a) The gauge was replaced and reading taken from 14th.

FOR THE MONTH OF JULY 1936.

8	9	10	11	12	13	14	15	16	17	18	19	20
1·72	0·70	0·36	..	1·43	0·48	1·50	..	..	1·18	0·75	0·79	..
0·13	1·25	0·88	0·64	0·50	0·71	2·75	..	0·72	0·60	..	..	..
..	0·20	1·13	..	..	0·13	0·12	0·11	0·31	..	..	..	0·05
0·91	1·61	0·92	0·67	..	0·08	0·46	1·14	0·04	0·23	..	..	..
0·60	1·70	0·50	1·20	..	0·10	..	0·20	0·35	0·85	..	..	..
0·20	0·14	0·22	0·41	2·12	0·09	..	..	0·37	0·30	1·43	0·06	0·03
0·70	0·24	2·84	2·65	2·50	0·24	..	2·20	0·15	2·40	0·40	0·03	..
0·50	0·15	1·69	1·45	2·00	0·55	0·09	0·02	2·65	0·60	..	..	..
0·28	0·61	0·08	0·53	3·24	1·60	..	0·03	2·21	0·94	..	0·14	..
2·00	0·42	2·00	2·00	2·50	..	..	6·00	3·00	0·60	..	..	0·20
0·27	1·14	1·33	0·80	0·55	..	..	0·65	0·31	0·18	0·24	..	..
..	1·05	1·10	0·97	0·80	0·36	0·08	0·11	0·14	1·65	..	..	..
0·78	..	0·31	2·41	1·27	0·38	..	0·40	0·05	5·65	1·86	..	..
0·70	0·12	0·93	0·07	1·02	1·04	..	..	..	1·12	1·23	0·53	..
0·60	0·06	0·29	0·86	2·45	2·73	0·13	1·93	1·30	4·18	1·51	0·39	0·10
2·04	1·92	0·53	0·93	1·65	2·05	1·35	0·94	4·45	4·88	0·12	..	..
1·31	1·02	1·10	4·80	1·60	0·72	0·40	0·90	1·03	3·75	..	..	0·18
1·80	..	0·80	1·95	2·07	1·05	0·02	0·05	2·95	1·72	..	..	..
..	..	..	..	..	..	0·37	4·66	2·84	0·06	..	0·90	0·26
1·07	1·09	0·22	6·36	3·16	2·23	0·12	0·26	3·79	1·93	0·08	..	3·30
..	1·66	0·38	4·06	2·62	2·25	1·10	4·52	1·73	0·19	0·16	0·56	..
2·65	0·62	0·61	1·20	4·02	3·15	0·17	0·08	2·52	5·58	3·02	0·33	..
2·51	0·13	0·11	0·49	2·25	2·11	..	0·14	1·53	2·63	2·19	0·94	..
3·57	1·63	0·63	2·17	3·22	3·17	0·04	0·16	3·22	6·90	3·70	0·72	0·01
1·00	1·56	2·84	1·20	4·50	2·20	0·39	0·10	5·42	4·65	1·31	0·64	..
1·04	1·47	0·50	0·33	1·80	1·67	0·03	0·53	0·86	2·78	0·41	1·56	0·30
1·12	..	3·12	0·56	0·60	0·49	0·70	0·11	0·03	..	0·12	..	..
0·66	..	1·95	0·78	1·02	0·17	0·35	0·08	0·18	1·61	1·34	0·05	..
0·38	0·80	3·02	1·65	..	..	0·56	..	..	0·24	..	..	..
0·10	0·58	0·79	1·83	0·17	0·48	1·33	1·84	0·99	0·93	0·12	0·23	..
..	..	3·70	0·55	1·20	1·05	..	0·35	..	0·40	..	..	..
..	2·17	1·21	2·58	1·04	..	0·07	0·28	0·75	..	0·10	0·26	..
..	..	4·00	2·55	1·37	2·10	0·15	2·75	0·10	..	..	..	..
1·32	0·03	2·23	1·83	0·75	0·06	0·16	0·98	0·19	0·38	0·72	0·04	..
0·19	0·46	1·25	2·52	0·11	..	..	0·24	0·26	0·86	..	0·20	..
0·21	..	0·79	0·09	..	0·26	0·50	0·10	1·63	..	..	..	..
3·15	2·29	0·52	0·02	0·35	0·21	0·08	2·00	..	..	..	..	..
0·27	..	1·98	0·55	0·20	0·41	0·05	0·33	0·78	..	0·06	0·05	..
0·35	..	2·02	..	0·50	..	0·24	0·13	1·72	..	0·85	..	..
0·40	..	2·05	0·90	1·00	..	..	0·90	0·29	0·30	..	..	..
..	0·18	1·12	0·22	2·31	0·28	..	..	1·08	..	..	..	..
..	1·42	2·24	..	2·55	..	0·12	..	..	0·08	0·07	0·14	..
0·10	..	2·09	1·40	0·06	0·40	0·02	0·04	0·16	..	0·03	..	0·13
0·64	0·19	2·30	1·09	0·03	0·89	..	..	0·32	0·91	..	..	0·09
0·40	..	0·32	0·02	0·61	0·80	..	2·90	..	..	..	0·19	..
0·42	0·12	3·35	0·56	1·34	0·43	..	..	0·53	0·51	0·15	..	0·03
2·46	1·15	2·78	0·65	2·12	..	..	3·11	2·00	0·11	2·78	0·44	..
..	1·10	1·50	0·78	0·10	..	..	0·42	0·65	1·45	0·32	..	..
0·90	1·40	0·50	1·00	..	..	0·80	..	0·90	..	..	..	..
1·38	1·16	1·08	0·91	1·42	.	..	0·73	0·30	1·07	0·20	..	..
0·42	0·05	..	1·15	4·31	..	..	1·10	1·87	0·82	0·57	0·17	..
..	0·05	0·18	0·97	0·43	0·13	..	..	0·50	..	0·13	0·07	..
0·11	..	0·35	1·05	0·48	0·83	0·25	0·47	1·08	0·09	0·12	0·13	0·24
..	..	0·15	1·68	0·68	4·20	0·05	1·15	0·95	0·20	0·20	0·10	0·60
0·20	0·15	0·34	2·42	0·25	0·04	0·16	0·09	0·69	0·19	0·22	0·18	0·20
0·70	0·90	1·20	0·15	0·25	0·25	0·60	0·40	..	..	..	..	1·30
..	0·36	0·15	0·62	1·15	0·17	..	..	0·28	..	0·61	..	0·21
0·02	1·08	2·20	4·52	0·24	0·01	..	0·59	0·48	0·15	0·04	0·70	0·02
1·45	0·07	2·05	0·75	3·50	0·76	0·25	..	3·20	1·55	0·05	..	..

DAILY RAINFALL RECORDED IN BENGAL

Division and district.	Station.	21	22	23	24	25	26	27
Rajshahi.								
Dinajpur ..	Nithpur	..	..	..	..	0·13	1·25	2·45
	Nawabganj	..	..	..	..	0·10	4·00	1·00
	Gangarampur	..	..	..	..	0·32	4·35	0·07
	Itahar	..	..	..	0·28	0·15	2·00	0·56
	Raiganj	..	..	..	..	0·55	0·15	1·35
	Dinajpur (Obsy.)	..	..	..	..	..	0·60	4·37
	Balurghat	..	0·54	0·60	..	..	0·90	2·97
	Thakurgaon	..	..	..	..	1·51	1·65	2·23
	Setabganj	..	..	..	..	0·07	0·08	4·53
	Ramganj*							
	Atwari	..	..	..	1·10	0·50	2·30	1·28
	Birganj	..	..	..	0·08	0·37	2·97	1·25
	Parbatipur	..	..	0·12	0·30	0·21	3·24	1·44
	Patnitola	..	..	..	..	0·06	1·14	1·46
	Sapahar	..	..	..	0·81	..	..	2·73
Jalpaiguri ..	Jalpaiguri (Obsy.) ..	..	0·01	0·15	0·63	0·80	0·78	1·16
	Alipur Duars	..	0·18	0·35	1·33	..	2·22	2·79
	Falakata	..	..	0·63	..	0·28	0·80	5·20
	Debiganj	0·03	..	..	..	0·07	1·75	3·40
	Buxa (a)	0·84	3·40	4·77	2·82	3·27	1·17	0·77
	Kalchini	0·11	1·21	..	0·05	0·03	1·16	1·18
	Kumargram*							
Darjeeling ..	Siliguri	..	1·09	0·06	1·26	1·22	0·87	0·28
	Darjeeling (Obsy.) ..	..	0·14	0·11	0·21	0·60	0·10	0·73
	Kalimpong (Obsy.) ..	..	..	1·72	0·38	0·90	0·05	0·19
	Mongpoo	..	0·02	1·27	0·10	3·11	0·09	0·42
	Kurseong	..	0·13	1·35	0·70	3·24	0·17	0·82
	Pedong	0·14	0·08	0·52	0·78	1·07	0·55	0·43
Rangpur ..	Bhawaniganj (Gaibandha) ..	..	..	..	..	0·90	1·42	4·11
	Rangpur (Obsy.)	..	..	..	..	0·08	0·55	8·75
	Pirganj	..	..	..	..	0·48	2·93	2·76
	Kurigaon	..	..	..	..	0·37	0·11	4·43
	Gobindganj	..	..	..	0·50	0·50	2·40	1·50
	Bagdogra (Nilphamari) ..	..	..	..	0·27	0·04	5·79	1·85
	Ulipur	..	..	..	..	0·45	0·52	5·15
	Sunderganj	..	..	..	0·82	..	1·40	3·52
	Saidpur	..	..	..	..	0·93	7·36	1·15
Bogra ..	Sherpur	..	..	..	..	0·29	1·09	1·15
	Nowkhilla	..	..	..	0·43	2·62	1·60	3·12
	Bogra (Obsy.)	..	..	..	..	0·10	1·37	1·24
	Panchbibi	2·90	..	0·24	0·31	3·52	5·50	1·32
	Khetlal*							
	Adamdighi	..	..	..	..	0·80	2·10	0·50
	Dubchanchia	..	..	..	..	..	3·06	1·65
Pabna ..	Shazadpur	..	..	..	..	1·55	0·27	0·20
	Pabna	0·05	..	..	..	0·23	3·33	0·28
	Sirajganj (Obsy.)	..	..	..	..	0·05	2·51	1·29
	Iswardi	..	..	..	2·50	0·25	2·13	2·35
Malda ..	Malda (Obsy.)	..	..	..	..	0·04	0·04	3·91
	Chanchal	..	..	..	..	..	0·58	2·19
	Gazol	..	..	..	..	0·20	3·00	1·05
	Sibganj	..	..	..	..	..	2·50	4·20
	Gomastapur	..	..	..	..	1·85	5·25	0·35
	Nawabganj	..	..	..	0·10	4·38	1·99	0·31
Dacca.								
Dacca ..	Munshiganj	..	..	..	0·34	0·83	0·28	0·95
	Dacca	..	..	..	0·05	0·35	0·25	0·85
	Nawabganj	..	..	..	..	0·50	0·30	0·85
	Narayanganj (Obsy.) ..	..	..	..	0·23	0·42	0·65	0·80
	Narsingdi	..	..	..	..	0·93	1·60	0·60
	Manikganj	..	..	..	..	0·15	0·36	0·56
	Joydebpur	..	0·03	0·15	1·10	0·28	0·80	1·16
	Kapasia	1·05	..	..	..	0·15	2·45	1·50

* Not reported.

(a) The gauge was replaced and reading taken from 14th.

FOR THE MONTH OF JULY 1936.

28	29	30	31	Number of rainy days.	Average number of rainy days.	Total rainfall for the month.	Normal rainfall for the month.	Heaviest rainfall during the month.	Total rainfall from 1st June to 31st July 1936.	Normal rainfall from 1st June to 31st July 1936.
0·28	..	..	..	16	14·4	14·52	12·25	2 45	18·34	23·52
3·52	0·82	0·25	0·57	21	13·7	23·07	15·56	4·00	25·34	30·69
0·32	1·24	0·13	0·40	16	15·4	10·25	15·60	4 35	13·34	28·51
0·07	0·10	0·05	1·15	17	15·6	12·67	13·87	2 00	17·21	25·43
..	1·15	..	..	14	16·4	9·35	14·75	1·70	15·80	27·52
0·67	3·83	1·76	..	15	17·1	19·67	15·50	4·37	27·50	29·55
1·01	0·58	1·97	0·15	22	15·9	25·01	13·18	2·97	32·67	25·16
1·80	0·50	1·81	0·21	18	16·2	21·41	19·95	2·65	31·80	36·95
0·70	1·45	3·74	0·12	17	14·3	21·26	15·55	4·53	27·41	30·67
					16·7		15·81			31·81
0·60	0·60	0 80	1·50	19	18·5	33·80	25·31	6·25	53·23	46·16
0·60	1·22	..	0·25	20	15·3	14·53	17·03	2·97	24·77	33·63
1·05	3·20	0·05	0·11	20	15·1	19·38	16·33	3·24	26·54	31·04
0·80	1·62	..	1·08	15	(*n*)	20·74	(*n*)	5·65	25·01	(*n*)
0·09	0·24	0·17	..	14	(*n*)	12·93	(*n*)	2·73	17·26	(*n*)
0·88	0·85	1·02	0·88	25	21·9	28·17	31·28	4·18	65·49	55·01
2·45	0·25	1·16	1·79	24	19·3	36·58	32·97	4·88	66·20	63·63
1·00	0·69	1·10	5·02	22	20·0	33·74	28·43	5·20	54·07	52·29
1·22	0·15	2·82	..	13	17·5	23·46	19·93	3·40	38·83	39 88
..	0·17	2·00	2·05	15	24·8	30·35	50·36	4·77	..	89·36
1·11	0·07	0·58	2·24	23	23·1	34·58	35·36	6·36	60·12	64·09
					21·7		13·20			76·11
0·24	0·26	2·16	0·09	24	22·8	33·88	33·40	4·52	56·93	58·80
0 38	0 23	1·20	1·00	25	25·4	33·50	32·31	5 58	49·15	57·17
0·25	0·83	1·92	0·80	24	22·3	26 23	23·90	2 63	39·50	41·38
0·35	0 39	1·00	0·65	24	23·9	42·13	31·08	6·90	63·90	57·14
0·26	0·14	0·17	0·50	25	27·5	40·33	43·60	5·42	56·85	76·17
0·16	0·58	0·41	1 91	27	26·4	27 51	24·42	2·78	42·59	44·12
2·90	2·00	2 90	..	18	14·7	26·01	13·15	4·11	30·37	28·62
4·80	1·44	1 75	0·02	17	15·1	27·93	15·26	8·75	35·22	32·87
0·97	0·36	0·50	..	15	13·3	16·77	15·75	3 02	19·98	32·27
7·40	0·65	5·63	0·07	23	14·0	29·61	16·09	7 40	39 89	38·29
0·30	0·03	0·06	..	15	15·3	18·64	14·04	4 30	23·08	28·35
0·93	3·56	..	0·49	19	15·8	26·66	17·18	5·79	39·12	37·03
6·25	1·25	4·45	0·10	17	13·4	37·94	14 08	6·25	48·99	33·03
5 63	0·73	1·40	0·07	18	14·0	26·09	14·97	5·63	35·69	30·85
2·10	4·21	..	..	19	13·9	26·43	16·71	7·36	32·26	32·61
0·37	0·48	..	0·09	16	15·6	15·76	12·22	3·94	22·99	24·60
1·33	0·09	..	..	16	14·7	22·08	12·22	3·15	28·13	25·65
1·17	1·25	0·12	0·07	17	16·6	13·37	13·06	2·10	18·37	27·09
0·31	0·32	0·55	..	20	15·1	15·82	12·70	5 50	22 57	24·60
					15·8		10·16			18 61
3·80	..	0·10	..	15	(*n*)	15·26	(*n*)	3·80	18 57	(*n*)
0·70	2 54	..	..	15	(*n*)	15·51	(*n*)	3 06	19 30	(*n*)
0·50	0·30	0·08	..	15	13·9	12·12	10·49	2·55	20 93	21·09
1·12	0·85	0·03	..	15	16·4	12·40	10·76	3·33	20·69	22 09
0·29	0·18	0·15	..	17	15·6	15·28	11 49	2·51	25·85	23 90
0·12	..	..	..	16	13·5	14·93	9·52	2·90	25·03	20·48
0·88	0·75	0·06	..	16	14·6	15·11	10·97	3·91	18 61	21·32
0·77	..	0·72	..	18	17·3	29·25	13·83	4·50	39·26	25·20
0·15	..	..	..	17	15·6	14·90	13·60	3·00	18 05	23 96
..	..	..	..	12	15·3	14·56	11·10	1·20	17 16	20·82
0·40	0·18	..	..	17	13·9	19·14	12 02	5·25	23·88	22·50
1·31	..	..	..	18	13·2	20·82	11·10	1·38	23 89	22 88
1·75	0·10	1·30	0·50	19	17·6	11·71	14·11	2·06	24·99	28·61
0·20	0·32	2·17	0·31	23	17·5	13·97	12·84	2·38	25·15	26·40
0·70	0·80	0·55	0·30	20	14·3	16·09	13·87	4·20	30·06	29·39
0·64	1·01	1·83	0·22	21	17·2	14·54	12·98	2·77	25 33	25·93
0·85	1·05	1·50	0·80	19	16·8	17·75	12·20	4·15	39·62	27·18
0·92	0·06	0·60	0·40	17	15·8	9·68	11·76	1·71	16·96	23·30
0·40	1·02	0·21	0·04	19	17·5	18·39	13·45	4·52	31·02	27·49
2·00	2·60	1·66	0·55	18	17·2	28·38	14·93	3·50	50·12	30·06

(*n*) Not ascertained.

DAILY RAINFALL RECORDED IN BENGAL

Division and district.	Station.	1	2	3	4	5	6	7
Dacca—*concld.*								
Mymensingh ..	Kishorganj	..	1·42	0·34	0·12	0·02	0·31	..
	Atia (Tangail)	1·28	0·36	0·17	..	..	0·62	0·06
	Sarisabari	0·72	0·30	0·38	0·37	1·00	0·83	0·56
	Mymensingh (Obsy.) ..	..	0·79	0·53	0·06	..	0·99	0·05
	Jamalpur	..	0·52	0·36	0·34	0·04	0·19	0·37
	Netrokona	..	1·32	0·68	..	0·02	1·42	2·46
	Pingna	..	2·80	0·33	0·11	0·11	2·60	2·78
	Durgapur	0·98	1·07	0·12	0·50	2·74	0·14	0·83
	Shorpur (Town)	..	0·52	0·12	..	0·72	0·85	..
	Dewanganj	..	0·95	0·08	..	1·47	0·46	0·37
	Nalitabari	..	0·80	..	0·26	..	1·15	0·27
Faridpur ..	Madaripur	..	0·11	0·06	0·32	0·28	0·11	0·41
	Faridpur (Obsy.)	..	1·01	0·05	0·19	..	0·15	1·70
	Rajbari (Goalundo) ..	..	0·87	0·02	0·05	0·12	0·13	0·72
	Haridaspur	0·34	0·04	0·19	..	0·74	1·21	0·12
	Takerhat	0·06	0·04	0·06	..	0·18	2·50	0·01
	Bhanga	..	0·03	0·24	..	0·50	1·15	..
	Pangsa	..	0·05	0·34	..	0·90	0·80	0·14
	Baliakandi	..	..	0·06	0·28	..	0·57	5·05
	Bhusna	0·04	0·12	..	0·13	..	..	1·48
	Palong	..	0·19	0·12	..	..	..	0·81
Bakarganj ..	Patuakhali	0·29	0·08	..	0·88	0·78	0·62	3·25
	Barguna*							
	Pirojpur	0·67	..	..	..	1·02	1·07	6·17
	Barisal (Obsy.)	..	0·03	0·58	0·49	0·22	0·74	2·40
	Gaurnadi	..	..	..	..	0·14	0·46	0·54
	Bhola	..	0·40	0·36	0·25	0·27	0·48	1·65
	Daulatkhan	..	0·25	0·28	0·32	0·35	1·80	2·12
	Bauphal	0·22	0·97	1·41	1·06	0·38	0·66	0·45
Chittagong.								
Chittagong ..	Cox's Bazar (Obsy.) ..	..	0·22	0·67	0·06	0·43	2·43	0·87
	Chittagong (Obsy.) ..	0·02	0·06	0·05	0·10	0·06	0·13	0·16
	Kutubdia	..	..	0·28	2·17	0·36	0·34	..
	Satkania	0·68	0·50	0·25	0·37	0·10	0·15	..
	Mirsarai	0·40	1·15	0·15	0·55	1·10	3·30	0·52
	Rangunia	..	0·30	0·29	..	0·60	0·06	0·30
Tippera ..	Comilla (Obsy.)	..	1·84	0·55	0·30	1·03	0·26	1·27
	Chandpur	..	0·82	0·90	0·18	0·02	1·37	1·06
	Brahmanbaria	..	0·90	0·15	..	0·12	0·20	0·04
	Ramchandrapur	..	1·10	..	0·35	0·10	..	..
	Nasirnagar	..	..	..	..	..	..	..
	Daudkandi	..	..	..	..	0·65	0·36	2·92
	Kasba	..	..	0·30	1·45	..	0·95	..
	Laksam	1·00	0·90	1·00	0·90	0·71	2·05	..
Noakhali ..	Noakhali (Obsy.)	0·06	0·60	0·37	0·57	0·94	1·96	2·82
	Feni	0·10	0·38	0·92	0·46	1·15	0·16	0·88
	Harishpur*							
	Ramganj	1·10	..	..	..	1·00	0·75	0·70
	Chhagalnaya	0·44	0·75	1·32	0·60	..	2·58	0·15
	Hatiya	..	..	0·50	0·68	0·35	2·50	2·08
	Lakhmipur	..	..	..	..	..	2·10	..
Chittagong Hill Tracts.	Rangamati	..	0·10	0·36	0·23	0·71	0·16	0·08
	Bandarban	0·10	1·40	0·25	..	..	0·35	1·01
	Barkal	0·60	0·70	0·20	0·09	0·20	0·10	..
	Mahalchari	..	0·65	0·15	0·08	0·16	0·02	0·08
	Lama	0·35	1·25	..	0·55	0·65	..	1·45
	Ramgarh	0·12	..	0·21	..	0·12	0·50	0·30
	Manikseri	0·21	0·08	..	0·26	0·79	0·30	0·50
	Dighinala	..	1·87	0·14	..	0·40	0·37	0·45
	Mainmukh ..	1·20	0·24	0·46	0·15	0·29	0·80	..
	Kaptai	..	0·17	0·36	0·14	0·34	0·08	0·29
	Panchhari	..	0·76	0·05	0·07	0·27	0·32	0·58
	Nakhyongchhari	..	..	1·00	0·29	0·31	1·30	0·50
Tripura State ..	Agartala	1·50	0·25	0·13	0·19	0·30	0·73	0·19
Cooch Behar ..	Dinhata	..	..	0·35	0·05	0·65	0·03	0·72
	Cooch Behar (Obsy.) ..	..	..	1·15	0·04	0·43	..	0·58
	Mekliganj	..	..	1·09	0·12	0·40	2·70	0·03
	Mathabhanga	..	..	0·40	..	0·16	1·17	0·18
	Fulbaria (Tufanganj) ..	..	..	0·23	..	0·14	0·03	1·12

* Not reported.

FOR THE MONTH OF JULY 1936.

8	9	10	11	12	13	14	15	16	17	18	19	20
0·21	0·07	2·57	1·01	0·51	2·40	0·48	..	2·92	0·21	0·06	..	0·71
..	1·86	1·74	0·17	2·14	0·02	..	..	0·67	..	..	0·02	..
0·30	2·30	3·57	0·50	0·10	..	..	0·05	..	0·05	0·35	..	..
..	0·02	1·04	2·04	0·25	0·71	0·31	..	0·43	1·09	0·11	0·04	0·14
0·22	0·21	3·18	1·52	0·23	0·51	0·21	..	0·43	0·03	0·29	..	..
0·80	0·01	0·44	1·98	0·72	0·51	1·68	..	0·55	1·47	0·84	0·02	0·07
0·27	1·05	1·66	3·64	0·27	0·18	..	..	..	..	..	0·21	0·05
..	3·15	3·12	1·25	2·40	2·35	1·00	0·40	1·30	0·30	..	0·10	..
..	2·00	8·00	1·55	3·21	0·81	..	..	3·41	..	..	..	..
..	9·41	1·30	1·19	1·48	0·40	..	1·33	0·16	0·05	..	..	..
0·26	0·29	5·04	2·70	2·05	0·20	0·46	..	2·30	0·65	0·11	..	0·18
0·06	0·17	0·22	0·92	0·05	0·88	0·25	..	0·15	0·13	..	0·21	0·12
0·02	..	0·21	0·73	1·00	1·07	0·02	0·01	0·86	..	0·07	0·09	0·09
..	..	0·58	0·18	0·34	1·24	0·14	0·06	0·04	..	0·17	0·03	0·14
..	0·10	0·45	0·03	0·11	0·33	0·12	0·13	0·01	0·34	0·05	0·03	0·01
..	0·14	0·27	0·01	0·09	..	..	0·11	0·22	0·02	0·12	..	0·06
..	0·50	0·45	1·10	0·55	..	0·74	0·95	0·40	..	1·60	..	0·19
..	0·55	0·35	0·13	0·22	..	..	..	..	..	..	0·25	0·31
..	0·20	0·56	1·60	0·77	0·35	0·20	..	0·04	..	0·14	..	0·09
0·05	..	0·19	..	1·26	1·10	2·20	..	0·22	..	0·04	..	..
0·31	0·49	0·10	2·20	..	1·40	0·70	0·10	0·32	0·17	0·66	..	..
0·18	1·23	0·30	3·47	0·38	0·75	0·28	0·12	..	0·77	0·08	1·16	0·21
..	2·29	..	0·36	..	1·07	4·01	..	0·19	0·15	0·03	0·10	0·05
0·09	0·11	..	0·73	0·09	0·14	0·67	0·31	0·40	2·63	..	0·09	0·04
0·48	0·07	1·39	0·64	..	0·29	0·31	..	..	1·45	0·05	0·03	0·19
0·16	0·77	0·06	2·05	0·47	0·56	..	..	1·12	0·41	0·42	0·17	0·03
0·15	0·40	0·55	1·27	0·41	1·25	..	..	0·50	1·23	0·35	..	..
0·85	0·76	1·32	1·81	2·14	1·29	0·71	0·82	0·37	..	1·00	..	0·18
2·69	0·64	2·16	1·88	4·70	2·13	1·18	0·21	0·77	0·06	0·05	0·30	..
1·34	0·38	0·82	2·28	1·82	0·66	0·42	0·10	0·03	0·02	..	..	..
0·74	1·14	2·06	..	0·95	3·18	1·02	..	1·10	0·83	0·12	..	..
..	..	..	2·10	1·77	2·25	1·28	..	..	..	..	0·54	1·03
0·80	4·50	1·95	1·36	1·34	1·00	2·40	2·90	0·80	..	..	..	..
0·13	0·17	0·29	1·50	0·20	1·61	0·60	0·13	..	0·38	0·03	0·46	0·52
0·30	0·11	0·38	4·54	0·34	0·05	..	0·12	1·33	0·06	..	..	0·87
0·06	0·04	0·55	1·40	0·09	0·30	0·10	0·06	1·11	0·62	0·03	0·15	0·01
..	0·14	1·25	1·20	0·18	..	0·24	0·93	1·60	0·45	..	1·70	0·35
0·05	..	0·25	2·55	1·35	..	0·55	0·35	0·60	0·50	..	..	0·25
..	..	2·60	3·50	1·50	..	..	2·30	2·70	..	..	..	3·50
1·25	0·46	1·88	2·19	0·50	0·56	0·07	1·87	0·25	0·41	0·37	0·51	0·19
1·15	..	1·05	..	..	0·45	..	1·05	..	0·30	..	..	1·25
1·00	0·18	5·28	0·70	0·30	..	1·09	..	..	0·10	..	..	..
0·99	0·49	1·41	3·08	1·88	0·74	0·44	0·14	1·18	0·15	0·06	0·96	..
0·58	0·30	1·15	1·30	2·32	0·50	0·26	0·82	1·30	0·36	..	..	0·30
1·70	2·10	0·75	1·50	0·15	0·10	1·40	..	..	..	..	1·05	1·10
0·75	1·12	2·35	0·36	0·21	0·15	0·90	0·07	0·28	0·65	0·15	0·99	0·24
0·10	0·44	2·45	4·80	2·46	0·87	0·57	0·81	1·15	0·18	0·22	0·22	0·10
2·20	..	..	..	..	..	..	..	..	2·70	..	..	..
0·45	0·32	1·71	0·21	1·36	0·55	1·11	0·63	0·17	0·74	..	0·15	0·60
0·34	0·35	0·17	0·25	0·18	0·30	0·25	1·75	0·55	0·20	..	0·25	..
0·55	0·55	3·00	0·90	0·95	2·50	0·30	0·50	0·20	0·17	0·30	0·60	0·11
0·78	0·04	1·21	2·49	1·97	0·35	0·34	0·75	0·91	1·11	0·11	0·03	0·53
0·52	0·76	2·06	1·57	1·26	1·00	0·52	0·53	0·71	..	..	0·22	..
0·12	1·30	1·06	0·95	..	0·32	1·31	0·45	..	..	0·09	0·45	1·14
0·07	2·32	1·65	1·50	0·30	0·28	1·41	0·90	..	0·20	0·20	0·31	0·15
..	0·20	1·10	0·35	0·40	0·20	0·10	0·72	0·34	0·84	0·10	0·57	2·10
..	0·95	1·15	1·10	0·15	0·56	0·54	0·40	..	0·03	0·34	0·80	0·26
0·06	0·16	0·14	2·26	0·55	0·44	0·80	0·80	0·27	..	..	0·36	0·94
0·20	0·48	1·51	0·82	0·09	0·05	0·21	0·28	0·38	0·30	..	..	2·30
0·21	1·39	0·80	1·30	1·01	0·40	0·99	0·21	0·71	..	..	0·06	..
0·13	2·05	1·77	0·59	0·08	..	2·34	3·76	0·32	0·11	0·96	2·60	0·26
0·27	..	0·01	0·05	3·40	0·70	0·05	1·96	0·34	2·50	0·09	..	..
0·11	0·12	0·48	0·06	1·78	1·86	5·30	1·34	1·15	3·68	0·12	..	..
0·94	0·43	1·31	6·35	5·50	0·95	2·73	0·70	1·50	3·40	0·30	..	1·45
0·07	0·05	0·12	3·48	2·74	1·25	3·82	0·93	0·58	6·57	0·02	..	0·28
0·10	..	2·50	1·40	5·27	2·26	4·59	1·05	0·44	3·44	..	..	0·10

DAILY RAINFALL RECORDED IN BENGAL

Division and district.	Station.	21	22	23	24	25	26	27
Dacca —*concld.*								
Mymensingh ..	Kishoreganj	..	..	..	0·65	0·20	0·61	0·83
	Atia (Tangail) ..	..	..	..	0·17	0·45	0·76	1·46
	Sarisabari	0·06	..	..	..	0·35	3·61	0·60
	Mymensingh (Obsy.) ..	..	..	..	0·07	0·23	0·73	0·41
	Jamalpur	..	..	..	..	0·24	0·80	2·30
	Netrokona	..	..	0·02	0·01	0·69	0·92	2·07
	Pingna	..	..	..	..	..	0·83	2·05
	Durgapur	..	..	0·57	1·00	2·35	1·50	2·57
	Sherpur (Town)	..	..	..	..	1·44	..	1·51
	Dewanganj	..	..	..	..	0·10	1·05	3·55
	Nalitabari	..	..	..	0·05	0·26	2·05	0·82
Faridpur ..	Madaripur	..	..	..	0·16	0·11	0·76	0·48
	Faridpur (Obsy.)	..	..	..	0·03	0·06	0·44	0·27
	Rajbari (Goalundo) ..	..	..	..	0·11	0·29	0·38	1·70
	Haridaspur	0·17	..	0·16	0·40	0·48	0·79	0·85
	Takerhat	..	..	0·01	0·02	0·18	0·51	0·21
	Bhanga	..	0·10	0·15	0·05	1·85	0·58	0·55
	Pangsa	0·11	0·05	0·06	0·31	0·95	0·81	0·25
	Baliakandi	0·59	0·02	0·10	0·09	0·69	0·70	0·96
	Bhusna	..	..	0·20	0·22	0·40	0·65	0·20
	Palong	..	..	..	..	0·50	0·15	0·90
Bakarganj ..	Patuakhali	0·04	0·12	0·05	0·08	0·58	0·78	2·06
	Barguna*							
	Pirojpur	0·07	..	0·27	0·15	0·05	0·10	2·50
	Barisal (Obsy.)	..	0·04	0·06	0·22	0·75	0·45	3·30
	Gaurnadi	0·38	..	0·10	0·19	0·71	1·91	0·11
	Bhola	..	..	0·04	0·15	0·30	0·16	2·92
	Daulatkhan	..	0·20	0·05	0·15	0·30	0·55	1·07
	Bauphal	0·15	0·13	..	..	0·24	0·31	..
Chittagong.								
Chittagong ..	Cox's Bazar (Obsy.) ..	..	..	..	0·56	0·47	0·31	0·27
	Chittagong (Obsy.) ..	0·02	..	..	0·22	0·08	0·74	1·20
	Kutubdia	..	..	0·17	0·52	0·41	0·65	0·37
	Satkania	1·05	0·45	..	..	0·18	0·37	1·25
	Mirsarai	..	..	0·20	0·39	0·60	1·50	2·80
	Rangunia ..	..	..	0·09	0·40	1·00	1·35	1·00
Tippera ..	Comilla (Obsy.)	0·12	0·02	..	0·03	0·94	1·72	4·16
	Chandpur	..	0·03	..	0·55	0·60	0·42	3·29
	Brahmanbaria	0·18	..	..	0·24	0·18	0·74	2·34
	Ramchandrapur	..	..	..	..	0·05	0·55	1·05
	Nasirnagar	1·40	..	..	0·50	..	..	0·35
	Daudkandi	0·16	0·16	0·63	0·12	0·47	0·52	1·56
	Kasba	..	1·15	1·60	..	1·10	2·45	1·20
	Laksam	..	1·60	0·76	1·10	1·60	5·10	4·15
Noakhali ..	Noakhali (Obsy.) ..	..	..	..	0·88	0·36	0·70	0·98
	Feni	0·15	0·20	..	0·09	0·24	0·15	5·30
	Harishpur*							
	Ramganj	..	..	..	..	..	1·15	1·10
	Chhagalnaya	0·25	..	0·08	0·19	1·77	2·47	2·25
	Hatiya	..	0·02	..	0·64	0·52	0·47	1·60
	Lakhmipur	..	..	..	..	1·40	..	0·40
Chittagong Hill Tracts	Rangamati	0·39	0·21	..	..	0·23	0·52	1·10
	Bandarban	0·10	0·15	..	..	0·75	0·53	0·54
	Barkal	0·50	2·50	0·40	0·35	0·70	0·20	0·20
	Mahalchari	0·10	0·05	0·17	0·07	0·13	0·47	1·36
	Lama	..	..	..	..	1·75	0·25	0·65
	Ramgarh	..	..	..	..	1·45	3·22	2·19
	Manikseri	0·12	..	0·11	0·13	0·66	1·78	1·82
	Dighinala	0·40	0·90	0·20	..	0·10	0·26	1·50
	Mainmukh	0·50	0·16	..	0·42	0·50	0·40	1·60
	Kaptai	0·34	0·12	..	0·32	0·30	0·20	2·23
	Panchhari	0·11	0·19	0·07	0·04	0·65	0·21	5·00
	Nakhyongchhari	..	..	..	..	1·00	1·02	1·27
Tripura State ..	Agartala	0·28	0·14	..	0·40	0·98	4·30	0·75
Cooch Behar ..	Dinhata	..	..	..	..	0·14	0·40	3·40
	Cooch Behar (Obsy.) ..	..	0·02	..	..	0·05	0·39	6·36
	Mickliganj	..	..	0·07	..	0·36	2·50	2·62
	Mathabhanga	..	..	2·63	..	..	2·95	4·89
	Fulbaria (Tufanganj) ..	..	..	..	..	..	0·63	3·25

* Not reported.

Dacca, the 19th August 1936.

FOR THE MONTH OF JULY 1936.

28	29	30		Number of rainy days.	Average number of rainy days.	Total rainfall for the month.	Normal rainfall for the month.	Heaviest rainfall during the month.	Total rainfall from 1st June to 31st July 1936.	Normal rainfall from 1st June to 31st July 1936.
0·25	2·09	2·52	2·64	21	17·1	23·15	15·46	2·92	36·31	34·75
0·57	..	0·16	0·05	15	13·8	12·73	11·08	2·14	24·42	23·08
0·54	0·14	1·22	0·05	19	16·6	17·95	13·45	3·61	26·63	26·54
2·71	0·28	2·96	3·02	19	19·8	19·01	16·46	3·02	29·58	35·17
0·34	1·51	0·40	1·55	21	17·0	15·79	13·79	3·18	21·01	29·15
2·50	0·55	2·65	3·91	20	21·4	28·31	20·36	3·91	45·94	44·02
0·90	0·16	0·43	..	18	13·1	20·43	10·53	3·64	29·05	24·28
1·45	1·50	0·71	0·60	26	21·8	34·00	30·80	3·15	48·98	57·79
1·08	1·29	3·17	2·39	16	18·3	32·07	16·84	8·00	40·53	32·19
7·03	1·99	2·27	0·45	18	14·3	35·09	14·75	9·41	42·09	30·98
1·20	0·41	4·32	1·87	22	18·8	27·70	20·23	5·04	40·35	42·04
0·25	0·24	1·52	0·62	22	17·1	8·59	12·60	1·52	14·85	25·72
0·92	0·59	0·86	0·56	15	17·6	11·00	12·83	1·70	21·11	26·19
0·29	0·07	0·22	0·15	18	15·5	8·04	11·15	1·70	14·14	23·45
0·45	1·24	0·23	0·11	22	17·2	9·23	13·33	1·24	16·74	26·58
1·24	0·91	1·02	1·00	14	17·1	8·99	13·31	2·50	17·65	30·72
2·00	0·45	0·65	1·40	21	16·4	15·18	11·75	2·00	24·61	25·73
0·29	0·45	0·03	..	17	18·4	7·35	12·43	0·95	15·63	27·60
0·29	0·59	0·54	0·44	19	17·2	14·92	12·66	5·05	24·27	27·67
0·70	0·80	0·24	0·33	17	17·0	10·57	11·07	2·20	17·30	23·96
0·05	0·55	4·00	1·56	19	19·9	15·28	17·40	4·00	24·01	36·14
0·72	0·42	2·80	1·52	24	22·3	24·00	22·07	3·47	47·95	44·01
					21·3		22·58			44·28
0·03	1·76	0·67	0·13	18	20·1	22·91	15·92	6·17	51·15	31·21
0·31	0·33	0·83	0·21	20	20·4	16·26	15·60	3·30	26·35	31·93
1·11	2·50	0·79	0·30	20	18·7	14·14	13·93	2·50	19·52	27·70
0·80	0·23	1·79	1·43	23	21·5	17·55	17·79	2·92	27·98	36·47
0·18	1·25	0·91	1·15	24	20·2	17·04	19·31	2·12	24·99	40·53
0·45	0·61	2·65	1·15	26	21·1	22·09	20·04	2·65	40·88	38·12
5·31	2·78	2·26	1·52	23	22·5	34·93	35·94	5·31	63·03	66·08
1·50	1·85	1·55	2·70	18	18·6	18·31	22·40	2·70	33·45	43·19
5·06	2·92	4·05	..	21	20·5	28·44	28·85	5·06	53·75	53·09
1·75	0·98	0·60	0·22	21	19·5	17·87	25·36	2·25	24·58	45·77
4·10	2·05	2·15	0·20	25	20·3	38·21	26·41	4·50	51·69	49·79
2·63	0·93	1·28	0·03	22	(*n*)	16·28	(*n*)	2·63	33·57	(*n*)
1·14	3·98	2·44	0·36	22	18·2	28·26	15·05	4·54	39·54	33·10
1·29	1·30	1·64	0·96	20	19·3	17·95	14·40	3·29	27·44	29·97
0·24	0·25	2·75	1·40	23	16·1	17·77	11·16	2·75	31·57	26·91
0·15	1·15	1·75	..	16	14·4	12·70	13·35	2·55	21·95	30·08
..	0·65	..	..	10	15·6	19·00	12·19	3·50	34·40	27·78
0·64	..	0·80	0·78	25	15·7	20·37	13·33	2·92	34·48	27·72
2·15	2·75	2·95	..	17	15·9	23·30	11·69	2·95	43·98	26·99
3·70	5·12	0·47	0·22	23	17·2	38·99	18·41	5·28	47·74	34·98
1·46	1·10	0·61	2·60	25	22·6	27·53	24·35	3·08	43·18	45·84
4·08	4·15	0·60	0·90	27	21·4	30·63	24·29	5·30	36·19	47·18
					21·0		27·73			49·41
2·50	1·22	1·43	2·00	19	19·9	22·80	17·12	2·50	35·72	34·27
2·57	0·38	0·95	0·12	28	19·7	25·72	23·94	2·58	31·25	44·45
1·20	2·68	0·72	1·80	26	22·7	30·13	28·01	4·80	46·44	48·67
2·30	..	2·30	..	7	20·0	13·40	19·37	2·70	23·58	40·17
1·06	1·43	1·26	0·73	26	21·9	16·58	18·94	1·71	27·95	36·79
2·80	1·95	0·75	0·65	25	21·4	15·92	21·99	2·80	26·59	42·06
0·80	0·45	1·65	0·30	29	22·7	20·57	21·10	3·00	33·61	39·74
1·73	3·22	1·93	0·43	23	20·4	21·42	17·86	3·22	32·91	33·25
3·12	3·95	1·47	..	21	24·6	24·59	34·46	3·95	44·20	61·26
2·76	1·02	0·61	..	20	20·4	19·69	18·74	3·22	27·83	36·07
4·10	1·23	0·92	..	25	(*n*)	22·30	(*n*)	4·10	29·26	(*n*)
1·44	1·82	0·70	0·34	27	(*n*)	17·91	(*n*)	2·10	28·99	(*n*)
2·03	0·87	0·31	0·10	26	(*n*)	16·40	(*n*)	2·03	24·93	(*n*)
0·34	1·50	0·46	0·10	25	(*n*)	14·07	(*n*)	2·26	31·74	(*n*)
1·81	0·52	0·10	..	22	(*n*)	17·90	(*n*)	5·00	33·14	(*n*)
1·32	3·80	3·70	3·22	21	(*n*)	25·81	(*n*)	3·80	52·58	(*n*)
0·74	1·09	0·48	0·09	27	16·7	27·51	12·10	4·30	45·40	27·51
2·50	0·68	0·32	..	15	17·2	18·61	19·97	3·40	33·16	45·96
2·03	1·45	1·33	1·99	19	19·6	31·82	30·34	6·36	67·16	63·25
0·70	1·20	1·81	0·71	23	18·9	39·87	24·04	6·35	62·93	49·10
1·32	1·62	0·42	4·02	20	18·8	39·67	26·23	6·57	61·44	54·51
3·90	0·31	0·22	0·11	19	18·9	31·09	28·94	5·27	59·70	58·04

(*n*) Not ascertained.

S. ABDULLAH, for *Director of Agriculture, Bengal.*

Statement showing the gauge readings at Dacca Waterworks Station on the river Buriganga for the week ending 15th August 1936.

Date.	At highest water.		At lowest water.		Commencement of—		Remarks.	
	Time.	Reading.	Time.	Reading.	Ebb tide.	Flow tide.	7 a.m.	5 p.m.
1936.								
9th August ..							18·4	18·45
10th „ ..							18·5	18·5
11th „ ..							18·45	18·4
12th „ ..	Tide is not perceptible.						18·4	18·3
13th „ ..							18·3	18·3
14th „ ..							18·3	18·35
15th „ ..							18·4	18·45

Notable high and low water levels of previous years.

		Taken at high tide.				Taken at low tide.
27th August	1906 ..	70·5	23rd February	1907 ..	51 06	
5th September	1909 ..	66·86	13th „	1908 ..	51·06	
10th August	1910 ..	69·86	12th March	1912 ..	51·06	
1st „	1911 ..	68·46	6th „	1914 ..	50·60	
13th „	1912 ..	67·16	22nd February	1915 ..	50·30	
31st „	1915 ..	69·7	15th „	1916 ..	50·60	
8th „	1916 ..	68·1	3rd March	1917 ..	51·0	
12th „	1917 ..	67·1	21st February	1918 ..	51·40	
13th „	1918 ..	69·12	26th „	1919 ..	50·4	
2nd „	1919 ..	66·8	18th „	1920 ..	50·9	
8th September	1920 ..	66·9	19th „	1921 ..	50·9	
28th July	1921 ..	68·4	8th March	1922 ..	51·05	
10th August	1922 ..	68·00	14th „	1923 ..	50·8	
31st July	1923 ..	66·15	16th February	1924 ..	50·50	
29th August	1924 ..	68·82	5th March	1925 ..	50·9	
8th September	1925 ..	68·52	9th February	1926 ..	2·2	
15th August	1926 ..	19·6	27th „	1927 ..	2·10	
17th September	1927 ..	18·70	16th „	1928 ..	2·2	
22nd August	1928 ..	20·0	21st „	1929 ..	2·0	
13th July	1929 ..	17·8	24th „	1930 ..	2·3	
12th September	1930 ..	18·65	28th „	1931 ..	2·2	
16th August	1931 ..	21·7	18th „	1932 ..	1·8	
6th September	1932 ..	18·5	6th „	1933 ..	2·10	
7th „	1933 ..	17·80	26th March	1934 ..	2·40	
23rd August	1934 ..	19·35	15th February	1935 ..	1·70	
1st September	1935 ..	19·80				

N.B.—Zero of the gauge at Dacca Waterworks prior to 11 a.m. on the 8th January 1926= −48·51 with reference to P. W. D. datum.

Zero of the gauge at Dacca Waterworks since 11 a.m. of the 8th January 1926=0·00 with reference to P. W. D. datum.

M. K. BHATTACHARJEE, for *Executive Engineer,*
Khulna Division.

Khulna, the 24th August 1936.

FORM C—BENGAL.

STATEMENT OF COTTON PRESSED IN THE BENGAL PRESIDENCY FOR THE WEEK ENDING THE 21st AUGUST 1936.

[Section 5 (2) of the Cotton Ginning and Pressing Factories Act, 1925.]

Name of Division or block.	Number of bales pressed.				District included in the block.
	During the week.	During the corresponding week last year.	Since 1st September 1935 (the date prescribed by the Local Government as the commencement of the season).	During the corresponding period last year.	
The Bengal Presidency	1,212 bales of 400 lbs. each.	827	67,156	47,590	All districts in the Presidency.

J. B. McBRIDE,

Chief Inspector of Factories, Bengal.

Statement showing particulars of Cotton Pressing Factories in Bengal and the special mark re-allotted to each factory for the cotton year 1936 as required under the Cotton Ginning and Pressing Factories Act, 1925, and the rules made thereunder.

	Name and address of factory.	Name of owner or lessee.	Special mark allotted.
1.	Ralli Brothers' Rance Cotton Ginning and Pressing Factory, Cossipore.	Messrs. Ralli Brothers, Ltd	1 L
2.	Calcutta Hydraulic Jute Press, 9, Kaliprasanna Singhee Street, Cossipore.	Messrs. The Calcutta Hydraulic Jute Press Co., Ltd. (Managing Agents : Andrew Yule & Co., Ltd.).	2 L
3.	The Sun Jute Press, 3, Cossipore Road, Calcutta	Messrs. Radhakissen Motilall ..	3 L
4.	The Empress of India Jute Press, 54, Goosery Road, Howrah.	Mr. P. K. Arjani	5 L
5.	Ralli Borthers' Cotton Ginning and Pressing Factory, Narayanganj.	Messrs. Ralli Brothers, Ltd.	7 L
6.	Nittyananda Cotton Ginning and Pressing Factory, Double Moorings, Chittagong.	Ditto	8 L
7.	The Atlas and Union Jute Press Co., Ltd., 3, Kaliprasanna Singhee Street, Cossipore.	Messrs. Soorajmull Nagarmull ..	15 L
8.	Bandaghat Jute Press, 4 to 4/9, Hazarimull Shah Road, Salkia, Howrah.	Messrs. S. C. Chunder	19 L
9.	Homer Jute and Cotton Works, 31, Harakumar Tagore Strand, Barnagore.	Messrs. Hoare Miller & Co., Ltd. ..	22 L

J. B. McBRIDE,

Chief Inspector of Factories, Bengal.

Vital statistics of towns with a population of 50,000 and over of the Bengal Presidency for the week ending Saturday, the 22nd August 1936.

Districts.	Nos.	Towns.	Population under registration according to census of 1931.			Births registered.		Deaths registered																							
			Male	Female.	Total.	Number registered (excluding still births)	Still-births registered.	Cholera.	Small-pox.	Plague.	Cerebro-spinal meningitis.	Malaria.	Enteric fever	Measles.	Relapsing fever (Spirochætal).	Kala-azar	Influenza.	Other fevers	Dysentery.	Diarrhœa.	Pneumonia.	Pulmonary tubercu-losis.	Other respiratory diseases.	Injuries including suicide.	Deaths from child-birth.	Other causes.	Total of all causes.			Total of corresponding week of the previous year.		
																										Male.	Female.	Total.	Male.	Female	Total.
Calcutta ..	1	Calcutta ..	778,817	362,045	1,140,862	646	89	5	8	..	10	11	25	1	..	4	5	22	34	7	66	53	33	18	3	255	298	262	560	324	258	582
Burdwan ..	2	Asansol Mining Settlement.	209,544	173,136	382,680	194	1	11	1	..	..	1	..	..	..	..	..	47	7	..	13	1	10	1	1	69	88	77	165	99	94	193
Howrah ..	3	Howrah ..	145,120	79,753	224,873	146	8	1	..	..	..	2	4	..	..	1	..	3	3	1	10	6	9	4	..	54	53	45	98	67	64	131
Dacca ..	4	Dacca ..	79,365	59,153	138,518	70	5	..	..	..	..	..	1	1	..	..	1	..	5	4	15	5	9	1	..	31	40	33	73	25	36	61
24-Parganas	5	Bhatpara .	60,154	24,841	84,975	40	2	..	..	..	..	..	3	..	..	..	..	4	3	1	2	..	..	..	..	5	7	11	18	15	21	36
	6	Garden Reach	36,131	19,741	55,872	17	2	..	..	..	..	2	1	..	..	..	..	7	2	1	2	..	..	..	..	4	9	10	19	12	9	21
Chittagong ..	7	Chittagong	35,049	18,107	53,156	26	1	..	..	..	..	..	1	..	..	..	..	5	1	..	..	2	1	..	..	6	9	7	16	6	11	17

A. C. CHATTERJI, M.B., D.P.H., MAJOR, I.M.S., *Director of Public Health, Bengal.*

Calcutta, the 28th August 1936.

DISTRICT REPORTS ON WEATHER AND CROPS.

For the week ending on the 26th August 1936.

Summary.—Excepting light showers in places the rainfall was generally moderate to heavy. It has facilitated the transplantation of winter paddy. Harvesting of autumn crops is in brisk progress. Prospects of standing crops are generally satisfactory. During the week ending Saturday, the 22nd August, 2,320 and 5,019 persons received gratuitous relief in Nadia and Murshidabad, respectively. In Burdwan, daily average of persons receiving gratuitous relief was 8,190 during the week ending Saturday, the 22nd idem. The average price of common rice for the province has fallen by about 0·43 per cent. as compared with that of the previous week.

Serial No.	District and sub-division.	Rainfall.	Price of common rice, in seers, per rupee.		Character of the weather, condition of crops, etc.
			This week.	Previous week.	
1	2	3	4	5	6
		Inches.			
1	24-Parganas ..	1·30	9½	9½	Weather seasonable. Condition of standing crops is favourable except in Barrackpore subdivision. Fodder and water are sufficient. No import or export of paddy except in Basirhat where import of paddy from East Bengal continues. Agricultural loans also gratuitous relief were distributed in Sadar, Basirhat and Diamond Harbour. Harvesting of jute continues.
	Diamond Harbour..	3·08	9½	9½	
	Barrackpore ..	0·27	8½	8½	
	Baraset ..	3·60	9	9	
	Basirhat ..	1·84	11	11	
2	Nadia ..	4·78	8½	8½	Weather seasonable. Fodder and water are sufficient. Crops are damaged to some extent by flood in all subdivisions except in Ranaghat. No agricultural loan distributed during the week. Gratuitous relief was given to 8 persons in Sadar, 2,296 persons in Chuadanga and to 16 persons in Meherpur for the week ending 22nd August. Harvesting of jute not yet commenced except in Kushtia subdivision.
	Kushtia ..	2·48	9	9½	
	Meherpur ..	1·66	11	11	
	Chuadanga ..	0·34	11	11	
	Ranaghat ..	0·93	9½	9½	
3	Murshidabad ..	0·66	10	9½	Weather seasonable. Prospects of standing crops are favourable. Fodder and water are sufficient. No large import or export. Cattle disease is reported from Jangipur subdivision. Number of persons receiving gratuitous relief in the distressed areas for the week ending Saturday, the 22nd August, was 271, 3,267 and 1,481 in Lalbagh, Kandi and Jangipur subdivisions, respectively. Flood is subsiding gradually and relief is being distributed to the flood stricken people.
	Lalbagh ..	0·74	10	9½	
	Jangipur ..	1·45	10	10	
	Kandi ..	2·44	10	10	
4	Jessore ..	0·76	11½	11½	Weather seasonable. Prospects of standing crops are fair. Harvesting of *aus* paddy and jute continues. No large export or import. Fodder and water are sufficient.
	Jhenidah ..	0·55	12	13	
	Magura ..	0·90	13	13	
	Narail ..	0·59	11	12	
	Bongaon ..	0·69	10	10	
5	Khulna ..	0·85	10	10	Weather seasonable. Fodder and water are sufficient. Test relief works suspended.
	Satkhira ..	1·83	10½	10½	
	Bagerhat ..	0·60	8½	8½	

Serial No.	District and sub-division.	Rainfall.	Price of common rice in seers, per rupee.		Character of the weather, condition of crops, etc.
			This week.	Previous week.	
1	2	3	4	5	6
		Inches.			
6	Burdwan ..	2·88	9	9	Weather seasonable. Condition of crop is favourable. Fodder is sufficient. Cattle-disease exists in Sadar subdivision. 8,190 persons daily on average received gratuitous relief during the week ending 22nd August 1936.
	Asansol ..	0·28	11	11	
	Katwa ..	2·68	9	9	
	Kalna ..	1·00	8½	8½	
7	Birbhum ..	2·39	10	10	Weather seasonable and cloudy. Prospects of standing crops are good. Fodder and water are sufficient.
	Rampurhat ..	5·45	10½	10½	
8	Bankura ..	4·90	10	10	Weather seasonable. Transplantation of paddy seedlings is nearly completed. Weeding has commenced. Prospects of standing crops are good. Fodder and water are sufficient.
	Vishnupur .	4·45	9½	9½	
9	Midnapore ..	1·21	10	10	Transplantation of winter paddy continues. Fodder and water are sufficient.
	Contai ..	6·78	10	9½	
	Tamluk ..	4·05	8½	8½	
	Ghatal ..	0·45	10½	11½	
	Jhargram ..	4·63	10½	10	
10	Hooghly ..	3·46	9½	9½	Weather seasonable. Fodder and water are sufficient. Harvesting of jute continues.
	Serampore ..	0·60	9	9½	
	Arambagh ..	3·40	9½	9½	
11	Howrah ..	2·09	10	10	Transplantation of winter paddy still continues. Fodder and water are sufficient. Harvesting of jute not yet commenced.
	Uluberia ..	0·80	9½	9½	
12	Rajshahi (Rampur-Boalia).	1·35	9½	9½	Weather seasonable. The condition of the standing crops appears to be fair in the interior. *Aus* paddy is being harvested. Fodder difficulty is being felt in the Char lands. Water is available.
	Naogaon ..	2·26	10½	10½	
	Nator ..	2·49	9¾	9¾	
13	Dinajpur ..	5·20	10	10	Weather seasonable. Fodder and water are sufficient. Cattle-disease is reported from Pirganj thana.
	Thakurgaon ..	4·10	10	11	
	Balurghat ..	0·80	11	11	
14	Jalpaiguri ..	11·14	11	9¾	Weather favourable. Transplantation of winter paddy and harvesting of *bhadoi* paddy are nearing completion. Harvesting of jute continues. Fodder and water are sufficient. Cattle-disease prevails in places.
	Alipur ..	17·21	9	9¾	

Serial No.	District and sub-division.	Rainfall.	Price of common rice, in seers, per rupee.		Character of the weather, condition of crops, etc.
			This week.	Previous week.	
1	2	3	4	5	6
		Inches.			
15	Darjeeling ..	4·53	8	8	Weather favourable. Transplantation of paddy and *marua* is about to be completed. *Bhuta* and potatoes are still being harvested. Fodder and water are sufficient.
	Kurseong ..	6·58	8	8	
	Siliguri ..	7·69	9½	9½	
	Kalimpong ..	3·43	7	7	
16	Rangpur ..	7·59	10	10	Weather seasonable. Prospects of standing crops are fair. No large export or import. Fodder and water are sufficient. Harvesting of jute continues. Cattle-disease exists in Nilphamari subdivision.
	Nilphamari ..	3·75	10¾	10¾	
	Kurigram ..	6·24	9½	10	
	Gaibandha ..	6·71	9	9	
17	Bogra ..	1·70	10½	10½	Weather very hot. Agricultural operation not affected by weather condition. Jute and *aus* paddy are being harvested. Fodder and water are sufficient.
18	Pabna ..	3·03	10	10	Weather seasonable and cloudy. Condition of standing crops is favourable. Cutting and steeping of jute continues in full swing. Prospects and outturn of jute and *aus* paddy seem bright. Flood in Bhangura Circle is reported. Fodder and water are sufficient.
	Serajganj ..	2·29	11½	11½	
19	Malda ..	3·25	11	10½	Weather seasonable. Transplantation of winter rice continues. Fodder and water available.
20	Cooch Behar ..	8·87	12 5/8	12 5/8	Weather seasonable. Preparation of lands for winter paddy and transplantation of seedlings continue. Harvesting of autumn paddy is almost finished. Cutting, steeping and washing of jute are in progress. Prospects and condition of standing crops fair. Fodder and water sufficient. Cattle-disease is reported from Dinhatta, Tufanganj and Mathabhanga subdivisions.
21	Dacca ..	3·06	11½	11½	Rainfall at North Sadar (Kapasia) 3·35. Weather seasonable and its effects on the agricultural operations are fair. No large export and import. Fodder and water are available. Harvesting of jute continues.
	Manikganj ..	4·50	11½	10	
	Narayanganj ..	2·39	12	12	
	Munshiganj ..	1·21	10	10½	

Serial No.	District and sub-division.	Rainfall.	Price of common rice, in seers, per rupee.		Character of the weather, condition of crops, etc.
			This week.	Previous week.	
1	2	3	4	5	6
		Inches.			
22	Mymensingh ..	3·02	10	10	Weather seasonable. Harvesting continues. Condition of crops is fair. Fodder and water are available.
	Jamalpur ..	3·01	10½	10½	
	Tangail ..	1·78	10	10	
	Netrakona ..	3·22	11½	11½	
	Kishorganj ..	6·14	10½	10½	
23	Faridpur ..	1·77	11½	11½	Weather seasonable. Prospect of standing crops is fair. Fodder and water are sufficient.
	Goalundo (Rajbari)	1·02	11	11	
	Madaripur ..	0·88	11	11	
	Gopalganj (*a*) ..	1·47	10½	10½	
24	Bakarganj (Barisal)	2·23	10½	10½	Weather seasonable. Prospects of standing crops are good in Sadar, Bhola and Patuakhali and fair in Pirojpur. Fodder and water are sufficient.
	Pirojpur ..	6·22	10½	10½	
	Patuakhali ..	4·36	10½	10½	
	Dakshin Shabazpur (Bhola).	2·49	10	10	
25	Chittagong ..	2·34	10 11*	10 11*	Weather seasonable. Condition of standing crops is fair in Sadar and unsatisfactory at Cox's Bazar. Fodder and water are sufficient. Panga salt sells at 14 seers at Sadar and 12 seers at Cox's Bazar.
	Cox's Bazar ..	3·67	10	10	
26	Tippera (Comilla) ..	1·45	10	10½	Weather fair.
	Brahmanbaria ..	1·44	10½	10½	
	Chandpur ..	2·33	11½	11½	
27	Noakhali ..	2·72	10	10	Weather seasonable. Cattle-disease is reported from Feni thana. Fodder and water sufficient.
	Feni ..	4·15	10½	10½	
28	Chittagong Hill Tracts.	2·54	12	9	Weather seasonable. Its effects are favourable. Cattle-disease is gradually subsiding. Fodder and water are sufficient.
29	Tripura State ..	1·65	10½	10½	Weather seasonable. Fodder and water are sufficient. Cattle-disease exists in Belonia and Subroom Divisions. Harvesting of *aus* and *joom* paddy and transplantation of winter paddy seedlings continue. Harvesting of jute has commenced. Cotton sells at Rs. 9 to Rs. 12 and jute at Rs. 3 to Rs. 5 per maund.

(*a*) The rainfall at Haridaspur, which is very near to Gopalganj, is shown here.

* Burma rice.

S. ABDULLAH, for *Director of Agriculture, Bengal.*

Dacca, the 31st August 1936.

Printed and published by the Superintendent, Government Printing, Bengal Government Press, Alipore, Bengal, on the 3rd September 1936.

Registered No. C207

LIBRARY

The Calcutta Gazette

Extraordinary

Published by Authority

SATURDAY, SEPTEMBER 5, 1936.

GOVERNMENT OF BENGAL.

Appointment Department.

Reforms.

NOTIFICATIONS.

No. 7190A.R.—5th September 1936.—In exercise of the powers conferred by paragraph twenty of the Fifth Schedule to the Government of India Act, 1935, read with paragraph twenty-six of Part I of the Government of India (Provincial Legislative Assemblies) Order, 1936, and of all other powers enabling him in that behalf, the Governor of Bengal in Council is hereby pleased to make the following rules for the conduct of elections to the Bengal Legislative Assembly:—

The Bengal Legislative Assembly Electoral (Conduct of Elections) Rules, 1936.

Preliminary.

1. These rules may be called the Bengal Legislative Assembly Electoral (Conduct of Elections) Rules, 1936. Short title.

2. In these rules, unless there is anything repugnant in the subject or context,— Definitions.

(*a*) "an election agent" means the person appointed under these rules by a candidate as his agent for an election;

(*b*) "Attesting Officer" means such officer as the Governor may, by notification in the Gazette, appoint to perform all or any of the duties of the Attesting Officer under these rules, and includes any officer deputed for the time being to perform his duties by the Attesting Officer, by an order in writing, of which a copy shall be sent to the Returning Officer;

(*c*) "Gazette" means the *Calcutta Gazette*;

(*d*) "the Act" means the Government of India Act, 1935; 26 Geo. V, C. 2.

(*e*) the expression "Returning Officer" has the same meaning as the meaning assigned to the said expression in the Bengal Legislative Assembly Electoral (Preparation, Revision and Publication of Electoral Rolls) Rules, 1936, and includes any person when performing any duty or function which such person is authorised to perform under sub-rule (1) of rule 4 of the said rules;

(*f*) "the Order" means the Government of India (Provincial Legislative Assemblies) Order, 1936; and

(*g*) the expressions "recognised trade union" and "constituent trade union" have the same meanings as the meanings assigned to the said expressions in Part IV of the Order.

Part I.—Eligibility of Rulers and subjects of Indian States to be members.

Eligibility of Rulers and subjects of Indian States for membership.

3. At the first elections held for the purpose of constituting the Legislative Assembly of the Province or at any bye-election held for the purpose of filling any seat in the Assembly so constituted, a Ruler of an Indian State and a subject thereof, shall be deemed to be qualified to be chosen to fill a seat for the purpose of clause (*a*) of paragraph 1 of the Fifth Schedule to the Act.

Part II.—Nominations and general procedure at elections.

Nomination of candidates.

4. (1) Any person may be nominated as a candidate for election to fill a seat in any constituency if he is qualified to be chosen to fill that seat under the Act or any Order or rule made thereunder or an Act of the Provincial Legislature:

Provided that in an election to fill a seat in a constituency in which a seat is reserved for a member of the Scheduled Castes when the provisions of paragraph 2 of Part IV of the Order apply, the provisions of this sub-rule shall not apply save and except as provided in sub-rule (1) of rule 9.

(2) The Governor shall in his discretion, under sub-paragraph (*l*) of paragraph 20 of Part I of the Order, fix for each constituency:—

(*a*) a date, not later than the fourteenth day after the date of the notification calling upon the constituency to elect a member, on or before which nominations are to be made;

(*b*) a further date, not later than the seventh day after the first mentioned date, for the scrutiny of nominations;

(*c*) a further date, not later than the day succeeding the date fixed for the scrutiny of nominations, on or before which candidatures may be withdrawn; and

(*d*) a further date or dates on which a poll shall, if necessary, be taken;

and the dates so fixed shall be published by notification in the Gazette by the Governor exercising his individual judgment.

(3) On the issue of a notification under sub-rule (2) it shall be the duty of the Returning Officer to give public notice of the intended election in form 1 annexed to these rules in such language or languages as he thinks fit. The said notice shall be published in such manner and in such places within the constituency as the Returning Officer considers necessary.

(4) On or before the date fixed under clause (*a*) of sub-rule (2), each candidate shall, either in person or by his proposer or seconder, between the hours of eleven o'clock in the forenoon and three o'clock in the afternoon, deliver to the Returning Officer or to such other person as is authorised in this behalf

under rule 4 of the Bengal Legislative Assembly Electoral (Preparation, Revision and Publication of Electoral Rolls) Rules, 1936, a nomination paper completed in the form specified in Schedule I and subscribed by the candidate himself as assenting to the nomination and by two persons referred to in sub-rule (5) as proposer and seconder.

In a trade union, factory or colliery labour constituency where the candidate is a member, honorary member or official of a recognised trade union, and is not entitled to vote in the choice of a member to fill any labour seat, the nomination paper shall be accompanied by a certificate to the effect that the candidate is a member of a recognised trade union and is not in arrear with his subscription thereto or that he is an honorary member or official of such union, as the case may be, and such certificate shall be signed by the President or Chairman or Secretary to such union and sealed with its common seal and the signature on such certificate shall be attested by a Magistrate to whom the President or Chairman or Secretary is personally known or to whose satisfaction he has been identified.

In a tea garden labour constituency the nomination paper shall be accompanied by a declaration specifying the qualifying tribe or caste mentioned in paragraph 26 of Part IV of the Order, of which the candidate is a member. Where the candidate in a tea garden labour constituency is entitled to vote in the choice of a member to fill some seat in the Legislative Assembly of Assam, Bihar or Orissa, the nomination paper shall also be accompanied by a certified copy of the entry made in the finally published electoral roll of the constituency of such Assembly in which he has been named as an elector.

(5) Any person whose name is included in the electoral roll of the constituency, and who is not subject to any disabilities for his name being so included under the Act or any Order or rule made thereunder or an Act of the Provincial Legislature, may subscribe, as proposer or seconder, as many nomination papers as there are vacancies to be filled but no more:

Provided that where a nominee of a firm, corporation or Hindu joint family is a candidate for election, any other nominee of the said firm, corporation or Hindu joint family shall not be entitled to subscribe either as proposer or seconder the nomination paper of such candidate:

Provided also that where a nominee of a firm, corporation or Hindu joint family has subscribed as proposer or seconder a nomination paper, any other nominee of the said firm, corporation or Hindu joint family shall not subscribe as seconder or proposer the same nomination paper.

(6) Every nomination paper delivered under sub-rule (4) shall be accompanied by a declaration in writing subscribed by the candidate that the candidate has appointed or does thereby appoint as his election agent for the election either himself or some one other person who is not disqualified under the Act or any Order or rule made thereunder or an Act of the Provincial Legislature for the appointment and who shall be named in the declaration; and no candidate shall be deemed to be duly nominated unless such declaration is delivered along with the nomination paper:

Provided that the election agent appointed for the primary election to choose an electoral college in the Railway Trade Union constituency by a candidate for the final election in that constituency shall be named as election agent of the candidate for such final election in the declaration referred to in this sub-rule and no other person shall be appointed by the candidate as such election agent under this sub-rule unless the election agent for the primary election is dead or the appointment of the election agent for the primary election has been previously revoked.

(7) In territorial constituencies other than European and Anglo-Indian constituencies and in factory, colliery and tea garden labour constituencies, and at a primary election to choose an electoral college in the Railway Trade Union constituency where it has been decided that the method of voting by ballot boxes shall be followed, the nomination paper shall also be accompanied by another declaration that the candidate has selected a symbol from the list specified in Schedule II to these rules; no candidate in such constituencies shall be deemed to be duly nominated unless such declaration is delivered along with the nomination paper.

(8) Any nomination paper which is not received before three o'clock in the afternoon on the date fixed under clause (*a*) of sub-rule (2) shall be rejected.

(9) On the presentation of a nomination paper, the Returning Officer may require the person presenting the same to produce copies of the electoral rolls or a copy of the list of members forming the electoral college in the Railway Trade Union constituency in which the names of the candidate and his proposer and seconder are included or of the necessary entries in such rolls or list and shall satisfy himself that the names and numbers on the electoral roll or the list of members forming the electoral college of the candidate and his proposer and seconder as entered in the nomination paper are the same as those entered in the electoral roll or such list. Where necessary he shall direct that the former be amended so as to be in accordance with the latter.

It shall be also competent for the Returning Officer to alter or amend any entry in the nomination paper presented to him with a view to ensuring accurate and adequate publication under sub-rule (10) of names of candidates and of persons who have subscribed the nomination paper as proposer and seconder.

(10) The Returning Officer or other person authorised shall, on receiving a nomination paper under sub-rule (4), inform the person or persons delivering the same of the date, time and place fixed for the scrutiny of nominations and shall enter in the nomination paper its serial number, and shall sign thereon a certificate stating the date on which and the hour at which the nomination paper has been delivered to him: and shall, as soon as may be thereafter, cause to be affixed in some conspicuous place in his office a notice of the nomination containing descriptions, similar to those contained in the nomination paper, both of the candidate and of the persons who have subscribed the nomination paper as proposer and seconder.

(11) Any candidate may withdraw his candidature by notice in form II annexed to these rules subscribed by him and assented to by the proposer and seconder and delivered to the Returning Officer

or other person authorised either by such candidate in person or by his proposer or seconder before three o'clock in the afternoon on the date fixed under clause (*c*) of sub-rule (2), and a candidate who has withdrawn his candidature, shall not be allowed to cancel the withdrawal or to be renominated as a candidate for the same election:

Provided that if the last day for the delivery of notice of withdrawal of candidature under this sub-rule is a public holiday within the meaning of section 25 of the Negotiable Instruments Act, 1881, or has been notified by the Governor as a day to be observed as a holiday in Government offices, the notice of withdrawal of candidature shall be considered as having been delivered in due time if it is delivered on the next succeeding day which is neither such a public holiday nor a day so notified. XXVI of 1881.

(12) The Returning Officer or other person authorised shall, on receiving a notice of withdrawal under sub-rule (11), as soon as may be, cause a notice of the withdrawal to be affixed in some conspicuous place in his office.

Deposit on nomination.

5. (1) At the time of delivery of a nomination paper under sub-rule (4) of rule 4, each candidate shall enclose with the nomination paper a Government treasury receipt (chalan) showing that a deposit of two hundred and fifty rupees has been made by him in the treasury; and no candidate shall be deemed to be duly nominated unless such deposit has been made and treasury receipt has been enclosed with the nomination paper:

Provided that if a candidate in a trade union, factory, colliery or tea garden labour constituency is a genuine manual worker he shall be required to deposit a sum of fifty rupees only and to enclose with the nomination paper the Government treasury receipt (chalan) for the said amount under this sub-rule.

(2) If a candidate by whom or on whose behalf the deposit referred to in sub-rule (1) has been made withdraws his candidature in the manner and within the time specified in sub-rule (11) of rule 4, or if the nomination of any such candidate is refused, the deposit shall be returned to the person by whom it was made; and, if any candidate dies before the commencement of the poll, any such deposit, if made by him, shall be returned to his legal representative or, if not made by the candidate, shall be returned to the person by whom it was made.

(3) If a candidate by whom or on whose behalf the deposit referred to in sub-rule (1) has been made is not elected and the number of votes polled by him does not exceed one-eighth of the total number of votes polled or, in the case of a constituency returning more than two members, one-eighth of the total number of votes polled divided by the total number of members to be elected, the deposit shall be forfeited to the Government:

Provided that in a general constituency in which a seat is reserved for a member of the Scheduled Castes:—

(*i*) the deposit of a candidate belonging to the Scheduled Castes, who is elected at the primary election but is not elected at the final election, shall not be forfeited; and

(*ii*) the deposit of any other candidate shall not be forfeited unless he fails to obtain one-eighth of the total number of votes polled by all candidates other than the candidates belonging to the Scheduled Castes.

(4) For the purpose of sub-rule (3), the number of votes polled shall be deemed to be the number of ballot papers, other than rejected ballot papers, counted

(5) The deposit made by or on behalf of a candidate, whether such candidate is elected or not, shall, if it is not forfeited under sub-rule (3), be returned to such candidate or to the person who has made the deposit on his behalf, as the case may be, after the publication of the result of the election in the Gazette:

Provided that, if a candidate is duly nominated at a general election in more than one constituency, not more than one of the deposits made by him or on his behalf shall be returned, and the remainder shall be forfeited to the Government.

Scrutiny of nominations.

6. (1) On the date fixed for the scrutiny of nominations under sub-rule (2) of rule 4, the candidates, their election agents, one proposer and one seconder of each candidate, and one other person duly authorised in writing by each candidate, but no other person, may attend at such time and place as the Returning Officer may appoint, and the Returning Officer shall give them all reasonable facilities for examining the nomination papers of all candidates which have been delivered within the time and in the manner laid down in rule 4.

(2) (*a*) The Returning Officer shall then examine the nomination papers and shall decide all objections which may be made to any nomination, and may, either on such objection or on his own motion, after such summary inquiry, if any, as he thinks necessary, refuse any nomination on any of the following grounds:—

(*i*) that the candidate is not qualified to be chosen to fill the seat under the Act or under an Act of the Provincial Legislature or under any Order or rule made under the Act; or

(*ii*) that the candidate is disqualified for being chosen to fill the seat under section 69 or any other provision of the Act or under an Act of the Provincial Legislature or under any Order or rule made under the Act; or

(*iii*) that a proposer or seconder is disqualified from subscribing a nomination paper under sub-rule (5) of rule 4; or

(*iv*) that there has been any failure to comply with any of the provisions of rule 4 or rule 5; or

(*v*) that the candidate is not identical with the person whose number or name on the electoral roll or in the list of members forming the electoral college in the Railway Trade Union constituency is given in the nomination paper as the number or name of such candidate; or

(*vi*) that any proposer or seconder is not identical with the person whose number or name on the electoral roll is given in the nomination paper as the number or name of such proposer or seconder; or

(*vii*) that the signature of the candidate or any proposer or seconder is not genuine or has been obtained by fraud.

(*b*) For the purposes of this rule:—

(*i*) the production of any certified copy of an entry made in the electoral roll of any constituency or in the list of members forming the electoral college in the Railway Trade Union constituency shall be conclusive evidence

of the right of any elector named in that entry to stand for election or to subscribe a nomination paper, as the case may be, unless it is proved that the candidate is disqualified under the Act or any Order or rule made thereunder or an Act of the Provincial Legislature or that the proposer or seconder, as the case may be, is disqualified under sub-rule (5) of rule 4;

(*ii*) the certificate accompanying the nomination paper of a candidate who is a member, honorary member or official of a recognised trade union in accordance with the provisions of sub-rule (4) of rule 4 and the production of a certified copy of an entry made in the list of recognised trade unions prepared and published under Part III of the Bengal Legislative Assembly Electoral (Preparation, Revision and Publication of Electoral Rolls) Rules, 1936, shall be conclusive evidence of the right of such candidate to stand for election in a trade union, factory or colliery labour constituency unless it is proved that the candidate is disqualified under the Act or any Order or rule made thereunder or an Act of the Provincial Legislature; and

(*iii*) where a person has subscribed whether as proposer or seconder a larger number of nomination papers than there are vacancies to be filled, those of the papers so subscribed which have been first received, up to the number of vacancies to be filled, shall be deemed to be valid.

(*c*) Nothing contained in sub-clause (*iii*), sub-clause (*iv*), sub-clause (*v*), sub-clause (*vi*) or sub-clause (*vii*) of clause (*a*) shall be deemed to authorise the refusal of the nomination of any candidate on the ground of any irregularity in respect of a nomination paper, if the candidate has been duly nominated by means of another nomination paper in respect of which no irregularity has been committed.

(*d*) The Returning Officer shall not refuse any nomination paper on the ground of a slight technical defect such as the wrong spelling of a name.

(3) (*a*) The Returning Officer shall endorse on each nomination paper his decision accepting or rejecting the same and, if the nomination paper is rejected, shall record in writing a brief statement of his reasons for such rejection.

(*b*) The scrutiny shall be completed on the day fixed in this behalf under clause (*b*) of sub-rule (2) of rule 4 and no adjournment of the proceedings shall be allowed.

(4) (*a*) On completion of the scrutiny of nominations and after expiry of the period within which candidatures may be withdrawn under sub-rule (11) of rule 4, the Returning Officer shall proceed as follows:—

(*i*) In the case of elections in territorial constituencies other than European and Anglo-Indian constituencies and in factory, colliery and tea garden labour constituencies, and in the case of a primary election to choose an electoral college in the Railway Trade Union constituency held under Part IV of these rules where it has

been decided that the method of voting by ballot boxes shall be followed, he shall forthwith examine the symbols selected by the candidates and if such symbols are found to conflict with each other, he shall allocate the symbols in conformity as far as possible with the wishes of the candidates and if necessary by lot, and his decision in this respect shall be final. Each candidate or his election agent shall at the same time be informed of the symbol assigned to such candidate and shall be given a specimen thereof. He shall then prepare a list of valid nominations indicating therein the symbol assigned to each candidate.

(*ii*) In the case of constituencies not provided for in sub-clause (*i*), he shall forthwith prepare a list of valid nominations.

(*b*) In every case the Returning Officer shall cause the list of valid nominations prepared by him under clause (*a*) to be affixed in some conspicuous place in his office.

Death of candidate before poll.

7. If a candidate who has been duly nominated under these rules dies after the date fixed for the scrutiny of nominations and before the commencement of the poll, the Returning Officer or other authorised person referred to in sub-rule (4) of rule 4 shall, upon being satsified of the fact of the death of the candidate, countermand the poll and report the fact to the Governor, and all proceedings with reference to the election shall be commenced anew in all respects as if for a new election:

Provided that no fresh nomination shall be necessary in the case of a candidate whose nomination had been valid at the time of the countermanding of the poll.

Procedure at election.

8. (1) If the number of candidates who are duly nominated and who have not withdrawn their candidature in the manner and within the time specified in sub-rule (11) of rule 4 exceeds that of the seats to be filled, the Returning Officer shall forthwith publish in the Gazette, and in such other manner as the Governor may direct, and in such places in the constituency as the Returning Officer may consider necessary, a list in form III annexed to these rules containing the names in alphabetical order and addresses of the candidates as given in the nomination papers and the symbol, if any, assigned to each candidate, and a poll shall be taken.

(2) If the number of such candidates is equal to the number of seats to be filled, the Returning Officer shall declare all such candidates to be duly elected to fill those seats.

(3) If the number of such candidates is less than the number of seats to be filled, the Returning Officer shall declare all such candidates, if any, to be elected to fill the seats, and the Governor exercising his individual judgment shall, by a notification in the Gazette, call upon the constituency to elect a person or persons, as the case may be, within such time as may be fixed by him in his discretion and specified in the notification:

Provided that where the constituency, having already been called upon under this sub-rule, has failed to elect a person or the requisite number of persons, as the case may be, to fill the vacancy

or vacancies, the Governor shall not be bound to call again upon the constituency to elect a person or persons until such time, if any, as he thinks fit.

(4) At elections in every constituency where a poll is taken votes shall be given by ballot in the manner provided in these rules and no votes shall be received by proxy.

(5) Votes shall be counted by, or under the supervision of, the Returning Officer, and each candidate, and either his election agent, or one representative of each candidate authorised in writing by the candidate shall have a right to be present at the time of counting.

(6) When the counting of the votes has been completed, the Returning Officer shall forthwith declare the candidate or candidates elected.

(7) The Returning Officer shall without delay report the result of the election to the Secretary to the Bengal Legislative Assembly or to such officer as the Governor may direct, and the declaration containing the name or names of the candidate or candidates elected shall be published in the Gazette.

Part III.—Special rules for election to seats in General constituencies in which any seat or seats are reserved for members of the Scheduled Castes.

Nomination of candidates for primary election.

9. (1) Any person who belongs to the Scheduled Castes may be nominated as a candidate for a primary election to be held for the purpose of selecting candidates for a seat or seats reserved in a constituency for members of those castes if he is qualified to be chosen to fill that seat or one of those seats under the Act or any Order or rule made thereunder or an Act of the Provincial Legislature.

(2) The Governor shall in his discretion, under sub-paragraph (1) of paragraph 20 of Part I of the Order, fix for each constituency in which any seat or seats are reserved for members of the Scheduled Castes—

(*a*) a date, not later than the fourteenth day after the date of the notification calling upon members of those castes who are entitled to vote in that constituency to elect four candidates for each seat so reserved, on or before which nominations are to be made;

(*b*) a further date, not later than the seventh day after the first-mentioned date, for the scrutiny of nominations;

(*c*) a further date, not later than the second day after the date fixed for the scrutiny of nominations, on or before which candidatures may be withdrawn;

(*d*) a further date or dates on which a poll shall, if necessary, be taken; and

(*e*) a further date, not later than the day succeeding the date on which any candidate has been declared elected at a primary election, on or before which such candidate may withdraw his candidature;

and the dates so fixed shall be published by notification in the Gazette by the Governor exercising his individual judgment.

(3) On the issue of a notification under sub-rule (2) it shall be the duty of the Returning Officer to give public notice of the intended primary election in form IV annexed to these rules in such language or languages as he thinks fit. The said notice shall be published in such manner and in such places within the constituency as the Returning Officer considers necessary.

(4) The provisions of sub-rules (4), (5), (6), (7), (8), (9), (10), (11) and (12) of rule 4, sub-rules (1) and (2) of rule 5, rules 6 and 7 of Part II shall apply *mutatis mutandis* to nominations of such candidates in the same way as they apply to nominations of candidates in territorial constituencies other than European and Anglo-Indian constituencies:

Provided that—

(*i*) the proposer and seconder referred to in the said rules shall be members of the Scheduled Castes; and

(*ii*) the deposit required under sub-rule (1) of rule 5 shall be fifty rupees only and the treasury receipt (chalan) for the said amount shall be enclosed with the nomination paper under the said sub-rule.

Return or forfeiture of deposit before final election.

10. (1) If a candidate by whom or on whose behalf the deposit under sub-rule (1) of rule 5 has been made for his nomination as a candidate for a primary election withdraws his candidature in the manner and within the time specified in sub-rule (3) of rule 13, the deposit shall be returned to the person by whom it was made; and, if any candidate dies before the commencement of the poll at the final election, any such deposit, if made by him, shall be returned to his legal representative or, if not made by the candidate, shall be returned to the person by whom it was made.

(2) If a candidate by whom or on whose behalf such deposit has been made is not elected at the primary election and the number of votes polled by him at such primary election is less than one-fourth of the total number of votes polled by the candidate who has secured the lowest number of votes amongst the successful candidates at such primary election, the deposit shall be forfeited to the Government.

(3) For the purpose of sub-rule (2), the number of votes polled shall be deemed to be the number of ballot papers, other than rejected ballot papers, counted.

(4) The deposit made in respect of a candidate who is not elected at a primary election shall, if it is not forfeited under sub-rule (2), be returned to the candidate or to the person who has made the deposit on his behalf, as the case may be, after the publication of the result of the election under sub-rule (5) of rule 13.

Return of deposit after final election.

11. The deposit made in respect of every candidate belonging to the Scheduled Castes elected at the primary election but whether elected or not at the final election shall be returned to the candidate or to the person who has made the deposit on his behalf, as the case may be, after the publication of the result of such election in the Gazette.

Procedure at primary election.

12. (1) If at a primary election held for the election of candidates for a seat or seats reserved in a constituency for members of the Scheduled Castes the number of candidates who are duly nominated and who have not withdrawn their candidature in the manner and within the time specified in sub-rule (*11*) of rule 4 exceeds four times the number of seats so reserved, the Returning Officer shall forthwith publish in the Gazette, and in such other manner as the Governor may direct, and in such places in the constituency as the Returning Officer may consider necessary, a list in form V annexed to these rules containing the names in alphabetical order and addresses of the candidates as given in the nomination papers and the symbol assigned to each candidate, and a poll shall be taken.

(2) If the number of such candidates does not exceed four times the number of seats so reserved, the Returning Officer shall declare all such candidates, if any, to be duly elected as candidates for the seat or seats.

Voting and counting of votes at the primary election and the declaration of result of such election and withdrawal of candidature at such election.

13. (1) At the primary election for the selection of candidates for seats reserved in a constituency for members of the Scheduled Castes, where a poll is taken, votes shall be given by ballot and no votes shall be received by proxy.

(2) The provisions of sub-rules (5) and (6) of rule 8, and rules 23 to 53 shall apply *mutatis mutandis* to the voting and counting of votes, the declaration of candidates elected and the custody of election papers at such primary election.

(3) Any candidate declared elected at a primary election under sub-rule (2) of rule 12 or sub-rule (2) may withdraw his candidature by notice in writing subscribed by him and delivered to the Returning Officer or other person authorised before three o'clock in the afternoon on the date fixed under clause (*e*) of sub-rule (2) of rule 9 and a candidate who has withdrawn his candidature shall not be allowed to cancel the withdrawal:

Provided that if the last day for the delivery of notice of withdrawal of candidature under this sub-rule is a public holiday within the meaning of section 25 of the Negotiable Instruments Act, 1881, or has been notified by the Governor as a day to be observed as a holiday in Government offices, the notice of withdrawal of candidature shall be considered as having been delivered in due time if it is delivered on the next succeeding day which is neither such a public holiday nor a day so notified.

XXVI of 1881.

(4) The Returning Officer or other person authorised shall, on receiving a notice of withdrawal under sub-rule (3), as soon as may be, cause a notice of the withdrawal to be affixed in some conspicuous place in his office.

(5) The Returning Officer shall, on the expiry of the period within which a candidature may be withdrawn under sub-rule (3), forthwith examine the symbols allotted to the candidates, elected at the primary election, at the time of the scrutiny of their nominations for such election under sub-rule (4) of rule 6, and if such symbols are found to conflict with the symbols allotted to other candidates in the said constituency, he shall allocate the symbols in conformity as far as possible with the wishes of the candidates and if necessary by lot, and his decision in this respect shall be final. Each candidate elected at the primary election or his election agent shall at the same time be informed of the symbol assigned to such candidate and shall be given a specimen thereof. The Returning Officer shall then prepare a list showing the candidates who have been duly elected at the primary election under sub-rule (2) of rule 12 or under sub-rule (2) and indicating therein the symbol assigned to each such candidate and cause the list so prepared to be affixed in some conspicuous place in his office.

Special procedure for election of members of the Scheduled Castes in certain cases.

14. (1) After any members of the Scheduled Castes are declared elected as candidates for a seat or seats reserved in a constituency for members of those castes at a primary election held under these rules they shall be deemed as candidates for election both to the reserved seat or seats as well as to the non-reserved seat or seats in that constituency, and the election to such reserved and non-reserved seats shall be determined at the poll which shall be taken in that constituency on the date or dates fixed under sub-rule (2) of rule 4.

(2) If a member of the Scheduled Castes who has been duly elected at a primary election as a candidate for a seat reserved for a member of those castes, dies after the primary election and before the commencement of the poll, referred to in sub-rule (1), the Returning Officer or other authorised person referred to in sub-rule (4) of rule 4 shall, upon being satisfied of the fact of the death of the candidate countermand the poll and report the fact to the Governor, and a new primary election shall be held in accordance with these rules for the election of another candidate in place of the one who is dead:

Provided that this rule shall not apply to any case where the total number of candidates for the reserved seats after the death of such candidate is not less than the number of seats reserved.

(3) The election agent appointed under sub-rule (6) of rule 4 for a primary election by a person who is afterwards elected at such primary election as a candidate for a seat reserved in a constituency for a member of the Scheduled Castes shall be deemed to be the election agent of such candidate for the final election held in that constituency for filling such seat.

Special procedure at elections in constituencies in which seats are reserved for members of the Scheduled Castes.

15. If in a constituency in which a seat or seats are reserved for members of the Scheduled Castes the number of candidates qualified to be chosen to fill the seat or seats is greater than the number of seats so reserved, the Returning Officer shall forthwith publish in the Gazette, and in such other manner as the Governor may direct, and in such places in the constituency as the Returning Officer may consider necessary, a list in form III annexed

to these rules containing the names in alphabetical order and addresses of the candidates both for the reserved and non-reserved seats in the constituency as given in the list of candidates prepared under sub-rule (5) of rule 13 and in the nomination papers indicating by special mark the candidates declared elected as candidates for the seats reserved, and the symbol assigned to each candidate, and a poll shall be taken.

Part IV.—Special rules for the primary election to choose an electoral college in the Railway Trade Union constituency.

Division of the Railway Trade Union constituency into electoral units for the purpose of primary election.

16. For the purpose of a primary election to choose an electoral college under paragraph 21 of Part IV of the Order, the Railway Trade Union constituency shall be divided into as many electoral units as there are constituent trade unions in the constituency and each constituent trade union shall form one electoral unit.

Appointment of persons to perform the functions of Returning Officer in electoral units.

17. The Governor may authorize the Returning Officer for the Railway Trade Union constituency for the purposes of the primary election to appoint for each such electoral unit, such other persons, being persons in the service of the Crown in India, who shall subject to the control of the Returning Officer perform all or any of the functions of the Returning Officer as may be necessary. Such persons when so appointed shall be known as the Returning Officers for the electoral units.

Electoral roll for each electoral unit.

18. For the purpose of such primary election in the Railway Trade Union constituency, so much of the electoral roll of the constituency as relates to each constituent trade union, shall be deemed to be the electoral roll of that electoral unit which is formed by that constituent trade union.

Determination of the number of persons to be elected by each electoral unit.

19. On or before a date to be fixed in this behalf by the Governor in his discretion, the Returning Officer for the Railway Trade Union constituency shall determine the number of persons to be elected by each unit, on the basis of one person for every complete two hundred persons included in the electoral roll of the electoral unit, at the primary election to choose an electoral college under paragraph 21 of Part IV of the Order and notify the same to the constituent trade unions concerned.

Nomination of candidates for primary election.

20. (1) Any person may be nominated as a candidate for a primary election in an electoral unit, held for the purpose of choosing an electoral college under paragraph 21 of Part IV of the Order if he is included in the electoral roll for that electoral unit.

(2) The Governor shall in his discretion, under sub-paragraph (1) of paragraph 20 of Part I of the Order, fix for each electoral unit of the Railway Trade Union constituency—

(*a*) a date, not later than the fourteenth day after the date of the notification calling upon the constituency to choose at a primary election an electoral college in accordance with the provisions of paragraph 21 of Part IV of the Order, on or before which nominations are to be made;

(*b*) a further date, not later than the seventh day after the first-mentioned date, for the scrutiny of nominations;

(*c*) a further date, not later than the day succeeding the date fixed for the scrutiny of nominations, on or before which candidatures may be withdrawn; and

(*d*) a further date or dates on which a poll shall, if necessary, be taken;

and the dates so fixed shall be published by notification in the Gazette by the Governor exercising his individual judgment.

(3) On the issue of a notification under sub-rule (2) it shall be the duty of the Returning Officer for each electoral unit to give public notice of the intended primary election in form VI annexed to these rules in such language or languages as he thinks fit. The said notice shall be published in such manner and in such places within the constituency as the Returning Officer for the electoral unit considers necessary.

(4) The provisions of sub-rules (4), (5), (6), (7), (8), (9), (10), (11) and (12) of rule 4 and rules 6 and 7 of Part II shall apply *mutatis mutandis* to nominations of such candidates, and each electoral unit shall be deemed a constituency for the purpose.

Procedure at primary election.

21. (1) If at a primary election held in an electoral unit for the purpose of choosing an electoral college under paragraph 21 of Part IV of the Order, the number of candidates who are duly nominated and who have not withdrawn their candidature in the manner and within the time specified in sub-rule (11) of rule 4 is greater than the number of persons to be elected as determined under rule 19, the Returning Officer for such unit shall forthwith publish in the Gazette, and in such other manner as the Governor may direct, and in such places as such Returning Officer may consider necessary, a list in form VII annexed to these rules containing the names in alphabetical order and addresses of the candidates as given in the nomination papers and the symbol, if any, assigned to each candidate, and a poll shall be taken.

(2) If the number of such candidates is equal to the number of persons to be so elected, the Returning Officer for the unit shall declare all such candidates to be duly elected to form the said electoral college.

(3) If the number of such candidates is less than the number of persons to be so elected, the Returning Officer for the unit shall declare all such candidates, if any, to be elected to form the said electoral college and the Returning Officer for the constituency shall with the consent of the Governor exercising his individual judgment call upon the electoral unit to elect a person or persons, as the case may be, within such time as may be fixed in this behalf by the Governor in his discretion and specified in the notification:

Provided that where the electoral unit, having been already so called upon, has failed to elect a person or the requisite number of persons, as the case may be, to fill up the deficiency in the number to be elected as determined under rule 19, the Returning Officer for the constituency shall not be bound to call again upon the electoral unit to elect a person or persons to fill up the said deficiency until he is directed by the Governor exercising his individual judgment to do so.

Voting and the counting of votes and the declaration of the result of primary election and the publication of names of persons elected to form the electoral college.

22. (1) At the primary election held in each electoral unit under this Part, where a poll is taken, votes shall be given by ballot and no votes shall be received by proxy.

(2) On or before the date referred to in clause (*a*) of sub-rule (2) of rule 20 the Returning Officer for the Railway Trade Union constituency shall determine the method of voting that shall be followed in the different electoral units and forthwith notify the same to the constituent trade unions concerned and such decision of the Returning Officer shall be final.

(3) At an election in an electoral unit where it has been decided under sub-rule (2) that the method of voting by ballot boxes shall be followed, sub-rules (5) and (6) of rule 8, and rules 23 to 53 shall apply *mutatis mutandis* to the voting and counting of votes, the declaration of candidates elected and the custody of election papers at such election.

(4) At an election in an electoral unit where it has been decided under sub-rule (2) that the method of voting by postal ballot shall be followed, the provisions of sub-rules (5) and (6) of rule 8, rules 51 to 53 and rules 71 to 79 shall apply *mutatis mutandis* to the voting and counting of votes, the declaration of candidates elected and the custody of election papers at such election:

Provided that the ballot paper in such elections shall be in form VIII annexed to these rules and the cover and the letter accompanying the ballot paper shall respectively be in forms IX and X annexed to these rules.

(5) The Returning Officer for each electoral unit shall, as soon as may be after the declaration of the candidates elected at the election held in that unit, forward the list of persons declared elected to the Returning Officer for the Railway Trade Union constituency.

(6) The Returning Officer for the Railway Trade Union constituency, on receipt of the list of names of persons elected from all the electoral units, prepare a list of names of all the persons so elected as forming the electoral college referred to in paragraph 21 of Part IV of the Order and cause the list to be published at the office of each constituent trade union and at his office and at the office of the Registering Authority.

(7) The persons named in the list published under sub-rule (6) will form the electoral college referred to in paragraph 21 of Part IV of the Order and each such person shall be a member of such electoral college.

Part V.—Voting.

Hours of commencement and close of the poll.

23. (1) The Governor shall fix the hour at which the poll shall commence and the hour at which it shall close on the date or dates fixed for the poll under clause (*d*) of sub-rule (2) of rule 4 or under clause (*d*) of sub-rule (2) of rule 9 or under clause (*d*) of sub-rule (2) of rule 20. The hours of polling shall ordinarily be uniform within each constituency but the Governor may in the case of any constituency specify different hours of polling within different areas. The Governor exercising his individual judgment shall, by notification in the Gazette, publish the hours fixed for polling and the said hours shall be also published in such other manner as the Governor may direct.

(2) The Returning Officer may, either for the constituency as a whole or for a particular polling station of the constituency, for sufficient cause and with the previous consent of the Governor in his discretion, postpone the date fixed for the poll to a date to be fixed by the Governor in his discretion, or for sufficient cause and with the previous consent of the Governor extend the hour fixed under sub-rule (1) at which the poll shall close.

Appointments of presiding officers and polling officers for polling stations.

24. (1) The Returning Officer shall select for each constituency as many polling stations as he thinks necessary and shall publish, in such manner as the Governor may direct, a list showing the polling stations so selected, and the polling areas for which they have respectively been selected.

(2) The Returning Officer shall appoint a presiding officer for each polling station and such other person or persons (hereinafter referred to as polling officer or officers) to assist the presiding officer as he thinks necessary:

Provided that if a polling officer is absent from the polling station the presiding officer may appoint any person who is present at the polling station to be the polling officer during the absence of the former officer and inform the Returning Officer accordingly.

(3) A polling officer may, if so directed by the presiding officer, perform all or any of the duties assigned to a presiding officer under these rules.

(4) If the presiding officer, owing to illness or other unavoidable cause, is obliged to absent himself from the polling station, his duties shall be performed by such polling officer as has been previously authorised by the Returning Officer to perform such duties during any such absence.

Duties of presiding officers at polling stations.

25. (1) The presiding officer shall keep order at the polling station, shall see that the election is fairly conducted, shall regulate the number of electors to be admitted at one time, and shall exclude all other persons except—

(*a*) the polling officer or officers, the candidates, and one agent of each candidate (hereinafter referred to as the polling agent) appointed in writing by the candidate, and authorised in this behalf by the Returning Officer,

(*b*) the police officer or officers or other public servants on duty, and

(*c*) the persons referred to in rule 32.

(2) There shall be at least two police constables or chaukidars on duty either inside or outside the polling station, as the presiding officer shall direct, who shall under the orders of the presiding officer assist in expediting and regulating the passage of electors inside the polling station or maintain order either inside or outside the polling station:

Provided that no police officer or chaukidar shall be allowed to stay inside the polling station or part of a polling station which is set apart exclusively for the recording of the votes of women electors:

Provided further that if the presiding officer so directs there shall not be more than one police constable or chaukidar on duty under this sub-rule at any polling station, where the votes in respect of an Indian Christian, European or the Anglo-Indian constituency are recorded.

(3) The presiding officer shall close the polling station at the hour fixed for the close of the poll under sub-rule (1) or sub-rule (2) of rule 23, as the case may be, so as to prevent the admission thereto of any elector after that hour, provided that all electors present at the polling station before it is so closed shall be entitled to have their votes recorded.

(4) In emergencies such as a disturbance of the public peace or the intervention of floods the presiding officer for any polling station may, with the previous approval of the Returning Officer, close the poll at such station and announce an adjournment of the poll to a date to be notified later. The Returning Officer shall immediately report the circumstances to the Governor and the Governor shall in his discretion, as soon as may be, appoint a date on which the poll shall recommence at such polling station. The hour at which the poll shall commence and the hour at which the poll shall close on such date shall be fixed by the Governor. The date so appointed and the hours so fixed shall be notified in such manner as the Governor may direct.

Removal from the polling station for misconduct.

26. If any person misconducts himself at the polling station or fails to obey the lawful orders of the presiding officer or the polling officer performing the duties of the presiding officer, he may immediately, by order of the presiding officer or such polling officer, be removed from the polling station by any police officer or

by any other person authorised in writing by the presiding officer or such polling officer to remove him; and the person so removed shall not, unless with the permission of the presiding officer or such polling officer, be allowed again to enter the polling station during the day:

Provided that this power shall not be exercised so as to prevent any elector who is otherwise entitled to vote at any polling station from having an opportunity of voting at such station.

Arrangements for secrecy of voting and recording of votes of *purdanashin* electors.

27. Each polling station shall be furnished with such number of compartments, in which electors can record their votes screened from observation, as the Returning Officer thinks necessary.

As far as possible, separate compartments and separate entrances and exits shall be provided for women electors. Suitable arrangements shall be made for recording the votes of *purdanashin* female electors, as far as is practicable.

The Returning Officer may, however, at his discretion, if a sufficient number of women suitable and willing to act as presiding and polling officers are available, provide a separate polling station for taking the votes of the women electors for any polling area, and at such polling stations the work of the presiding and polling officers shall be done by women and if necessary also by such male persons as the Returning Officer thinks fit. If it is not possible to provide such a separate polling station one woman attendant may be provided as far as practicable to help women electors in recording their votes.

For the purpose of identification the husband or other near relative of a woman elector may accompany her to the polling station. Such person shall not, however, be permitted to go inside the polling compartment.

Manner of providing ballot boxes and symbols of candidates at the polling stations.

28. (1) The Returning Officer shall provide at each polling station one ballot box for each of the candidates in each polling compartment thereof and the ballot boxes shall be so placed in the compartment that an elector can insert his ballot paper in any of the boxes without being observed by any other person.

(2) The symbol assigned to each such candidate shall be printed and pasted on the ballot boxes of the respective candidates. The ballot box of each candidate shall also be clearly marked with his name in English, Bengali and/or any other vernacular languages as may be decided by the Returning Officer.

(3) Outside and inside each such polling station there shall be displayed on boards, to be provided for the purpose by the Returning Officer, in bold and clear print the name of each candidate in English, Bengali and/or any other vernacular languages as may be decided by the Returning Officer, the name of the symbol with which his ballot box is marked and the symbol itself.

(4) The Returning Officer shall also provide at each polling station instruments for stamping the official mark on ballot papers, as many ballot papers as may be necessary, and copies of the electoral roll or of such part thereof as contains the names of the electors entitled to vote at such station.

(5) The official mark shall be kept secret, and a period of not less than seven years shall intervene between the use of the same official mark at elections for the same constituency.

Ballot boxes to be locked up and sealed before commencement of poll.

29. Every ballot box shall be so constructed that the ballot papers can be introduced therein, but cannot be withdrawn therefrom, without the box being unlocked. The presiding officer at any polling station, immediately before the commencement of the poll, shall show each ballot box to be used at the poll to such persons as may be present in such station so that they may see that it is empty, and he shall then lock it up, and place his seal upon it in such manner as to prevent its being opened without breaking such seal, and shall keep it so locked and sealed.

Section 14 of Act XXXIX of 1920 to be read and explained to persons present. XXXIX of 1920.

30. Before the polling station is open for the recording of votes, the presiding officer shall read to such persons as may be present the provisions of section 14 of the Indian Election Offences and Inquiries Act, 1920, and shall explain the substance thereof in the vernacular of the district.

Procedure before the recording of votes by ballot box system.

31. (1) The elector, on entering the polling station, shall first approach the person in charge of the electoral roll who shall ascertain the elector's name, address and such other particulars as appear on the roll, and having checked these with the roll, call out the number, name and description of the elector as printed. He shall then place against the number of the elector in the roll a short horizontal line to denote that the elector has received a ballot paper. No other mark shall be made on the roll.

(2) On the elector's name being called out the person in charge of the ballot paper shall enter the name of the polling station, the distinctive letter or number of the polling station, and the serial number of the elector, and in the case of a territorial constituency other than a European or the Anglo-Indian constituency, the name of the union board or chaukidari union in the case of a rural area, and the number of the ward and the name of the municipality in the case of an urban area, to which the elector belongs and which is included in the electoral areas of the constituency the electors in respect of which are entitled to vote at such polling station, and in the case of a factory, colliery or tea garden labour constituency the name of the factory, mine or tea garden, as the case may be, to which the elector belongs and which is included in the constituency on the counterfoil of the ballot paper. He shall then detach the ballot paper from the counterfoil and stamping it with the official mark deliver it to the elector.

(3) In deciding the right of a person to obtain a ballot paper under this rule the presiding officer at any polling station may interpret an entry in the electoral roll so as to overlook merely clerical or printing errors but shall record his reasons for doing so, and the interpretation he has adopted, on the counterfoil of the ballot paper issued to such person.

(4) At a primary election for the selection of candidates for seats reserved in general constituencies for members of the Scheduled Castes, and at a primary election to choose an electoral

college under paragraph 21 of Part IV of the Order, an elector shall be given only one ballot paper which he may place in the ballot box of the candidate for whom he desires to vote.

(5) At elections in general constituencies in which seats are reserved for members of the Scheduled Castes the elector shall be given as many ballot papers as there are members to be elected, and the polling officer shall explain to the elector that he can place all the ballot papers in the ballot box of one candidate or distribute them as he pleases and place them in different ballot boxes.

Persons to be present at the polling station to assist the polling officers in identifying electors.

32. At every polling station a Panchayet of the chaukidari union or the President or a member of the union board or an officer of the municipality included within the electoral areas of the constituency the electors in respect of which are entitled to vote at such polling station, or any other person whom the presiding officer considers suitable shall, as far as practicable, be present from the commencement of the poll and shall sit in close proximity to the polling officer in charge of the electoral roll and shall assist him in identifying the electors calling his attention to any case of impersonation or misrepresentation when the matter shall at once be referred to the presiding officer.

Manner of recording votes after receipt of ballot papers.

33. (1) The elector, on receiving the ballot paper, shall show the official mark thereon to the presiding officer or to the polling officer performing the duties of the presiding officer, and forthwith proceed into the polling compartment where he shall put his ballot paper or papers into the ballot box or boxes of the candidate or candidates for whom he desires to vote. Every elector shall vote without undue delay and shall quit the polling station as soon as he has put his ballot paper into the ballot box.

(2) The presiding officer may, at any time while a poll is proceeding, enter any polling compartment and may take such steps as may be necessary to ensure that the boxes remain ready for the reception of ballot papers, and that no elector delays unduly in any such compartment and that not more than one elector is in any such compartment at a time. The presiding officer may also see that no elector resorts to any malpractices within the polling compartment.

Recording of votes of illiterate and infirm electors.

34. If the elector, owing to illiteracy or infirmity, is unable to read the symbols on a ballot box, the presiding officer shall put the ballot paper into the ballot box according to the direction of the elector.

Elector to be questioned in case of doubts as to his identity.

35. At any time before a ballot paper is delivered to an elector, the presiding officer or polling officer may, of his own accord, if he has reason to doubt the identity of the elector or his right to vote at such station, and shall, if so required by a candidate or polling agent, put to the elector the following questions:—

(1) Are you the person enrolled as follows (reading the whole entry from the roll)? and,

(2) Have you already voted at the present election in this constituency?

(3) (And at a general election in a territorial constituency), have you already voted at this general election for the Legislative Assembly in any other territorial constituency?

(4) (And at a general election in a factory labour constituency), have you already voted at this general election for the Legislative Assembly in any other factory labour constituency or in any trade union or colliery labour constituency?

(5) (And at a general election in a colliery labour constituency), have you already voted at this general election for the Legislative Assembly in any other colliery labour constituency or in any trade union or factory labour constituency?

and the elector shall not be supplied with a ballot paper if he refuses to answer any one of the questions and unless he answers the first question in the affirmative, the second question in the negative, and, at a general election, the third, the fourth or the fifth question also in the negative.

Form of ballot paper and its contents.

36. (1) The ballot paper shall be in form XI annexed to these rules, and shall be printed in such language or languages as the Governor may direct.

(2) Every polling station shall have a distinctive letter or number allotted to it. The serial number and the name of the constituency shall be printed on every ballot paper and its counterfoil. There shall be also shown on the counterfoil of each ballot paper entries relating to the particulars mentioned in sub-rule (2) of rule 31 which shall be filled in by the person in charge of the ballot paper in accordance with the provisions of the said sub-rule.

Tendered votes.

37. If a person representing himself to be a particular elector named on the electoral roll applies for a ballot paper or papers, as the case may be, after another person has voted as such elector, the applicant shall, after duly answering such questions as the presiding officer may ask, be entitled to receive a ballot paper. Such ballot paper (hereinafter referred to as a "tendered ballot paper") shall be in form XII annexed to these rules, and, instead of being put into the ballot box, shall be given to the presiding officer who shall endorse it with the name of the candidate or candidates for whom such person desires to vote and the number of votes which such person desires to cast in favour of each such candidate and also with the name of the elector, his number on the electoral roll and the name of the electoral area or the factory, mine or tea garden to which the roll relates. It shall be set aside in a separate packet and it shall not be counted by the Returning Officer. The name of the constituency, the name of the elector and his serial number on the electoral roll and the name and the distinctive letter or the number of the polling station to which the roll relates shall be entered in a list in form XIII annexed to these rules which shall bear the heading "Tendered votes list." The person tendering such ballot paper shall sign his name and address thereon or affix his thumb impression against the entry in that list.

Challenged votes.

38. (1) If any polling agent or a Panchayet of a chaukidari union or the President or a member of a union board or an officer of a municipality or any person whom the presiding officer considers suitable declares and undertakes to prove, or if the presiding officer for any reason is clearly of opinion, that any person by applying for a ballot paper has committed the offence of personation, the presiding officer shall require such person to enter in the list of challenged votes (which shall be in form XIV annexed to these rules) his name and address, or if he is unable to write, to affix his thumb impression thereto. If such person refuses to comply with such requisition he shall not be permitted to vote, but if he does so comply, he shall be allowed to vote, after he has been warned of the penalty for personation, provided that he answers the questions mentioned in rule 35 in the manner laid down therein.

(2) The presiding officer shall in every case, whether or not the person is allowed to vote, make a note of the circumstances in the list of challenged votes.

Supply of duplicate ballot paper when ballot paper is spoilt through inadvertence.

39. An elector who has inadvertently dealt with his ballot paper in such a manner that it cannot conveniently be used as a ballot paper may, on delivering it to the presiding officer and satisfying him of the inadvertence, obtain another ballot paper in place of the spoilt paper, and the latter shall, together with its counterfoil, be marked as cancelled by the presiding officer.

Grant of certificate to the presiding officer, polling officer or polling agent, or public servant for voting at the polling station at which he is on duty.

40. (1) A presiding officer, polling officer or polling agent or public servant, who being an elector of any constituency, other than a European or the Anglo-Indian constituency, to which rules under this part apply is duly authorised or appointed for duty at a polling station at which he is not entitled to vote, may apply to the Returning Officer of the constituency for a certificate entitling him to vote at that polling station but at no other. On the production of such certificate he shall be allowed to vote at that polling station.

(2) Application for such certificate shall be made to the Returning Officer of the constituency of which he is an elector in form XV annexed to these rules on or before a date to be fixed in this behalf by the Governor in his discretion. The certificate shall be in form XVI annexed to these rules.

Manner of recording votes when certificate under rule 40 has been granted.

41. (1) A person in possession of a certificate issued under rule 40 shall deliver the certificate to the presiding officer who shall thereupon issue to the person a ballot paper or papers, as the case may be, in the same manner as to any other elector:

Provided that the person in charge of the ballot paper shall, under sub-rule (2) of rule 31, enter on the counterfoil of each such ballot paper the name of the polling station at which the vote is recorded, the name of the constituency and the polling station at which the elector would otherwise have been entitled to vote, the serial number of the elector in the electoral roll of that constituency and in the case of a territorial constituency other than a European or the Anglo-Indian constituency, the name of the union board or chaukidari union in the case of a rural area and the name of the ward and the name of the municipality in the case of an urban area which is included in the electoral

area, to which the elector belongs, of that constituency and in the case of a factory, colliery or tea garden labour constituency, the name of the factory, mine or tea garden, as the case may be, to which the elector belongs and which is included in that constituency as given in the certificate issued under rule 40.

(2) Ballot papers issued under sub-rule (1) shall be dealt with in the following manner:—

(*a*) If the polling station at which the person is authorised or appointed for duty is in the same constituency as the one in which he is entitled to vote, then, subject to the proviso to sub-rule (1), the provisions contained in rules 31 and 33 shall apply. The certificate delivered under sub-rule (1) shall be filed by the presiding officer.

(*b*) If the polling station at which the person is authorised or appointed for duty is not in the same constituency as the one in which he is entitled to vote, then the presiding officer shall along with the ballot paper or papers issue to the person as many envelopes as there are candidates for the constituency in which he is entitled to vote, each envelope having on its outside the symbol or the name of the symbol assigned to the respective candidate written, with instructions similar to those contained in sub-rule (5) of rule 31. The person shall then go inside the polling compartment and place the ballot paper or papers in the envelope or envelopes according to his choice, close the envelopes and enclose them in a cover to be supplied to him by the presiding officer and then hand the cover over to the presiding officer. The presiding officer shall, as soon as practicable after the close of the poll, despatch the cover together with the certificate delivered to him under sub-rule (1) to the Returning Officer concerned.

Delivery of ballot boxes, etc., to the Returning Officer after the close of the poll.

42. The presiding officer of each polling station, as soon as practicable after the close of the poll, shall, in the presence of any candidates or polling agents who may be present, make up into separate parcels and seal with his own seal and the seal of such candidates or agents as may desire to affix their seal:—

(1) each ballot box in use at each station unopened but with the key attached and the slit in the lid sealed up;

(2) the unused ballot papers;

(3) the tendered ballot papers;

(4) the spoilt ballot papers;

(5) the marked copy of the electoral roll and any certificates filed by the presiding officer under rule 41;

(6) the counterfoils of the ballot papers;

(7) the tendered votes list; and

(8) the list of challenged votes;

and shall deliver such packets or cause them to be delivered to the Returning Officer.

Statement by the presiding officer after the close of the poll.

43. The packets shall be accompanied by a statement in form XVII made by the presiding officer, showing the number of ballot papers entrusted to him, and accounting for them under the heads of ballot papers issued, unused, spoilt, and tendered ballot papers, and ballot papers dealt with under rule 41.

Part VI.—Counting of votes.

Appointment of time, place and date for the counting of votes.

44. (1) The Governor shall in his discretion appoint a date (which shall be as soon as practicable after the close of the poll) for the counting of votes. The Returning Officer shall fix the place and time at which the votes shall be counted on the date so appointed, and shall give notice of such date, time and place, in writing to all candidates and election agents.

(2) If, at the time appointed, all the ballot boxes have not been received by the Returning Officer, or if from any other unavoidable cause he is unable to proceed with the counting of votes, he shall with the previous consent of the Governor in his discretion postpone the counting to some other time and date appointed by the Governor in his discretion, and shall give notice thereof in writing to the candidates and election agents.

Persons who may be present at the counting of votes.

45. (1) No person shall be allowed to be present at the counting of the votes except the Returning Officer and such persons as he may appoint to assist him in counting the votes, and such other persons as have a right to be present under sub-rule (5) of rule 8.

(2) No person shall be appointed to assist in counting the votes, who has been employed by or on behalf of any candidate for any purpose whatsoever connected with the election.

Procedure to be followed at the counting of votes XXXIX of 1920.

46. On the day and at the time appointed under rule 44 the Returning Officer shall, before he commences to count the votes, read the provisions of section 14 of the Indian Election Offences and Inquiries Act, 1920, to such persons as may be present, and shall then proceed as follows:—

(*a*) All the ballot boxes allotted to a particular candidate shall be separated from those allotted to any other candidate and numbered and placed together, and the counting of all the ballot papers contained in the boxes allotted to the same candidate shall be completed before the counting of the ballot papers contained in the boxes allotted to any other candidate is commenced. The order as between the candidates in which the counting of votes shall proceed shall be the alphabetical order of the candidates' surnames. In case of dispute the decision of the Returning Officer shall be final. The Returning Officer or a person authorised by him shall, in the presence of the candidates or their agents or representatives as may be present, open each box and after taking out the ballot papers therefrom shall stamp each ballot paper with the name of the candidate to whom the box in which the ballot papers were con-

tained was allotted. He shall then distribute such papers in convenient bundles to persons appointed to assist in the counting of votes.

(*b*) When the ballot papers have been so distributed but not before, the Returning Officer shall allow the candidates and their election agents, or representatives duly authorised under sub-rule (5) of rule 8 or either of them as may be present reasonable opportunity to inspect, without handling the ballot papers, and shall on every ballot paper which is rejected endorse the word "rejected". If any candidate or his agent or representative present questions the correctness of the rejection, he shall also record on the ballot paper the grounds for the rejection.

(*c*) The Returning Officer shall, as far as practicable, proceed continuously with the counting of the votes, and shall, during any necessary intervals during which the counting has to be suspended, place the ballot papers, packets and other documents relating to the election under his own seal and the seals of such candidates, or election agents as may desire to affix them, and shall cause adequate precautions to be taken for their custody.

(*d*) After the counting of ballot papers contained in all the ballot boxes has been completed the Returning Officer shall record the number of ballot papers contained in the ballot boxes allotted to each candidate separately in a statement and shall seal in a separate packet all the ballot papers in support of each candidate.

Declaration of candidates elected.

47. When the counting of votes has been completed, the Returning Officer shall, subject to the provisions of paragraph 17 of Part I of the Order, forthwith declare the candidate or candidates, to whom the largest number of valid votes has been given, to be elected:

Provided that upon the application of any candidate, or his election agent, or his representative duly authorised under sub-rule (5) of rule 8 a recount shall be made before the Returning Officer makes the declaration, but the Returning Officer may reject any such application as may appear to him to be frivolous recording at the same time the grounds for such rejection:

Provided also that where a poll has been taken under rule 15 in a constituency in which one or more seats are reserved for members of the Scheduled Castes, the Returning Officer shall after the counting of votes has been completed, out of the total number of candidates for the reserved as well as the non-reserved seats, first declare elected to the reserved seat or seats the candidates belonging to the Scheduled Castes to whom the largest number of valid votes has been given and then out of the remaining candidates he shall declare elected to the non-reserved seat or seats the candidate or candidates, to whom the largest number of valid votes has been given.

Grounds for rejection of ballot paper.

48. (1) A ballot paper shall be rejected if —

(*a*) it does not contain the official mark, referred to in sub-rule (2) of rule 31,

(*b*) it bears any mark by which the elector can be identified.

(2) The decision of the Returning Officer as to the validity of a ballot paper shall be final, subject only to reversal on an election petition claiming the seat.

Verification of statements submitted by the presiding officers.

49. The Returning Officer shall not open the sealed packets of the tendered votes, the marked copy of the electoral roll or the counterfoils of the ballot papers. He shall verify the statements submitted by the presiding officers under rule 43 by comparing them with the statement prepared under clause (*d*) of rule 46 and with the number of counted votes and rejected ballot papers, the unused ballot papers in his possession and the tendered votes list, shall then reclose and reseal each packet which has been opened by him, and shall record on each packet a description of its contents and the date of the election to which it refers.

Return by the Returning Officer.

50. The Returning Officer shall then prepare and certify a return in form XVIII annexed to these rules setting forth—

(1) the names of the candidates for whom valid votes have been given,

(2) the number of valid votes given for each candidate,

(3) the number of votes declared invalid,

(4) the number of tendered votes given,

(5) the result of the verification referred to in rule 49, and

(6) the names of the candidates elected,

and shall permit any candidate, or his election agent, or his representative duly authorised under sub-rule (5) of rule 8 to take a copy of, or an extract from, such return.

Custody of the return and papers relating to election.

51. (1) The Returning Officer shall, after reporting the result of the election under rule 8, forward the return to the Secretary to Government of Bengal in the Reforms Department.

(2) With the exception of the papers relating to the election mentioned in rule 124, all papers relating to the election shall, in the case of a Calcutta constituency, the Calcutta and Suburbs (European) constituency, the Anglo-Indian constituency, and the Calcutta-cum-Presidency Division (Indian Christian) constituency, be forwarded by the Returning Officer to the Commissioner of the Presidency Division, in the case of the North Bengal Municipal (General) and East Bengal Municipal (General) constituencies, be kept by the Returning Officer in his own custody, and in the case of any other territorial constituency, be forwarded by the Returning Officer to the Commissioner of the Division in which the election has been held or where such Commissioner is himself the Returning Officer, shall be kept in his own custody. In the case of Landholders and Labour constituencies other than Trade Union constituency, such papers shall be forwarded by the Returning Officer to the Commissioner of the Division in which the election has been held, or where such Commissioner is himself the Returning Officer, shall be kept in his own custody and in the case of Commerce and Industry, Trade Union, and University constituencies, such papers shall be kept by the Returning Officer in his own custody.

(3) The papers relating to the election mentioned in rule 124 shall be disposed of by the Returning Officer in the manner set out in the said rule and shall be forwarded by him direct to the places and authorities mentioned therein or where such authority is himself the Returning Officer shall be kept in his own custody.

Inspection of papers relating to election and supply of copies of the return.

52. (1) While in the custody of the Commissioner of a division or the Returning Officer, the packets of ballot papers whether counted, rejected or tendered, and of the counterfoils thereof shall not be opened and their contents shall not be inspected or produced except under the order of a competent Court, or of a District Magistrate or a Commissioner of a division holding inquiry in respect of a primary election, or of Commissioners appointed to hold an inquiry in respect of an election, but all other papers relating to the election shall be open to public inspection subject to such conditions and to the payment of such fee, if any, as the Governor may direct.

(2) Copies of returns by the Returning Officer shall be furnished by the Secretary to Government of Bengal in the Reforms Department on payment of a fee of Rs. 2 for each copy.

Ballot papers when to be destroyed.

53. The packets of ballot papers and of the counterfoils thereof referred to in sub-rule (1) of rule 52 shall be retained for a period of one year and shall thereafter be destroyed subject to any direction to the contrary made by the Governor exercising his individual judgment, or by a competent Court, or by a District Magistrate or a Commissioner of a division holding inquiry in respect of a primary election, or by Commissioners appointed to hold an inquiry in respect of an election.

Part VII.—Special Rules for voting and the counting of votes applicable to European and Anglo-Indian Constituencies.

Method of voting that may be adopted in European and Anglo-Indian constituencies.

54. In the case of an election to fill a seat or seats in a European or the Anglo-Indian constituency, in electoral areas of such constituencies in which the population of Europeans or Anglo-Indians, as the case may be, entitled to vote in such constituency is compact in the opinion of the Returning Officer, the method of voting shall be by ballot boxes, and in other electoral areas of the constituency the method of voting shall be by postal ballot.

Decision as to the method of voting to be followed and its publication.

55. (1) If the number of duly nominated candidates in a European or the Anglo-Indian constituency referred to in sub-rule (1) of rule 8 is greater than the number of seats to be filled in such constituency, the Returning Officer shall, before publishing the list mentioned in the said sub-rule, decide in accordance with rule 54 the method of voting that shall be followed in such constituency as a whole or in different electoral areas thereof and such decision of the Returning Officer shall be final.

(2) The Returning Officer shall, before publication of the list mentioned in sub-rule (1) of rule 8, insert in it a note regarding the method of voting that shall be followed in the constituency as a whole or in different electoral areas thereof.

Special rules as to elections where in the constituency as a whole the method of voting by ballot boxes applies.

56. At an election to fill a seat or seats in a European or the Anglo-Indian constituency where it has been decided under sub-rule (1) of rule 55 that the method of voting by ballot boxes shall be followed in the constituency as a whole, rules 27, 28, 31, 33, 34, 36, 37, 40, 41, 46, 47, 48 and 49 shall not be applicable and the following rules 57, 58, 59, 60, 61, 62, 63, 64, 65, 66, 67, 68 and 69 shall respectively be substituted therefor and shall apply.

Arrangements for observing secrecy of voting.

57. Each polling station shall be furnished with such number of compartments, in which electors can record their votes screened from observation, as the Returning Officer thinks necessary.

Articles to be provided at the polling station.

58. (1) The Returning Officer shall provide at each polling station materials sufficient for the purpose of enabling electors to mark the ballot papers, instruments for stamping the official mark on such papers, as many ballot boxes as may be necessary, and copies of the electoral roll or of such part thereof as contains the names of the electors entitled to vote at such station.

(2) The official mark shall be kept secret, and a period of not less than seven years shall intervene between the use of the same official mark at elections for the same constituency.

Procedure before recording votes.

59. (1) Immediately before a ballot paper is delivered to an elector, it shall be marked on the back with the official mark, and the number, name and description of the elector as stated in the electoral roll shall be called out, and the number of the elector shall be entered on the counterfoil, and a mark shall be placed in a copy of the electoral roll against the number of the elector, to denote that he has received a ballot paper, but no mark shall be made and nothing shall be written on the copy of the electoral roll to show the particular ballot paper which he has received. On the counterfoil shall be entered the name of the constituency and the name and the distinctive letter or number of the polling station.

(2) In deciding the right of a person to obtain a ballot paper for the purpose of voting at an election, the presiding officer at any polling station may interpret an entry in the electoral roll so as to overlook merely clerical or printing errors but shall record his reasons for doing so and the interpretation he has adopted on the counterfoil of the ballot paper issued to such person.

Manner of recording votes.

60. The elector, on receiving the ballot paper, shall forthwith proceed into one of the compartments in the polling station, and there make a mark on the ballot paper against the name of the candidate or candidates for whom he intends to vote in accordance with the instructions set out on the ballot paper, and fold it up so as to conceal his vote, and, after showing to the presiding officer the official mark, shall put his ballot paper, so folded up, into the ballot box. Every elector shall vote without undue delay and shall quit the polling station as soon as he has put his ballot paper into the ballot box.

Recording of votes of illiterate and infirm electors.

61. If the elector, owing to illiteracy or infirmity, is unable to read the ballot paper or to make a mark thereon the presiding officer shall mark the vote in the ballot paper according to the direction of the elector. The elector shall then himself or with the assistance of the presiding officer put the ballot paper folded up into the ballot box.

Form of ballot paper.

62. The ballot paper shall be in form XIX annexed to these rules, and shall contain the names of the duly nominated candidates arranged alphabetically in the order of their surnames.

The ballot papers shall be serially numbered, the serial number being printed on the face of the counterfoil and on the back of the ballot paper.

Tendered votes.

63. If a person representing himself to be a particular elector named on the electoral roll applies for a ballot paper after another person has voted as such elector, the applicant shall, after duly answering such questions as the presiding officer may ask, be entitled to mark a ballot paper in the same manner as any other elector. Such ballot paper (hereinafter referred to as a "tendered ballot paper") shall be of a colour different from the other ballot papers, and instead of being put into the ballot box, shall be given to the presiding officer and endorsed by him with the name of the elector and his number on the electoral roll and the name of the electoral area to which the roll relates and shall be set aside in a separate packet and shall not be counted by the Returning Officer. The name of the elector and his number in the electoral roll and the name and the distinctive letter or the number of the polling station to which the roll relates shall be entered in a list in form XIII annexed to these rules, which shall bear the heading "Tendered votes list." The person tendering such ballot paper shall sign his name and address thereon or affix his thumb impression against the entry in that list.

Grant of certificate to the presiding officer, polling officer or polling agent or public servant for voting at the polling station at which he is on duty.

64. (1) A presiding officer, polling officer or polling agent or public servant, who being an elector of any European or the Anglo-Indian constituency is duly authorised or appointed for duty at a polling station at which he is not entitled to vote, may apply to the Returning Officer of the constituency for a certificate entitling him to vote at that polling station but at no other, provided that such polling station is within the constituency. On the production of such certificate he shall be allowed to vote at that polling station.

(2) Application for such certificate shall be made to the Returning Officer in form XV annexed to these rules on or before a date to be fixed in this behalf by the Governor in his discretion. The certificate shall be in form XVI annexed to these rules.

Manner of recording votes when certificate under rule 64 has been granted.

65. A person in possession of a certificate issued under rule 64 shall deliver the certificate to the presiding officer who shall thereupon issue to the person a ballot paper in the same manner as to any other elector, and the provisions contained in rules 59 and 60 shall apply. The certificate so delivered shall be filed by the presiding officer.

Procedure to be followed at the counting of votes. XXXIX of 1920.

66. On the day and at the time appointed under rule 44 the Returning Officer shall, before he commences to count the votes, read the provisions of section 14 of the Indian Election Offences and Inquiries Act, 1920, to such persons as may be present, and shall then proceed as follows:—

(*a*) The ballot box or boxes relating to each polling station shall be opened one after another, and the Returning Officer shall take

out the papers therefrom, count them or cause them to be counted, and record the number thereof in a statement. Such statement shall not be shown to any candidate, or his agent, or his representative duly authorised under sub-rule (5) of rule 8 until after the verification provided for in rule 69.

(*b*) After the number of ballot papers received in each box from each polling station has been recorded, the papers from all the boxes shall be mixed together. They shall then be sorted according to the candidates for whom they have been cast, and distributed in convenient bundles to persons appointed to assist in counting the votes.

(*c*) When the ballot papers have been so distributed but not before, the Returning Officer shall allow the candidates and their election agents, or representatives duly authorised under sub-rule (5) of rule 8 or either of them as may be present reasonable opportunity to inspect, without handling the ballot papers, and, shall on every ballot paper which is rejected endorse the word "rejected." If any candidate or his agent or representative present questions the correctness of the rejection, he shall also record on the ballot paper the grounds for the rejection. No candidate or agent or representative shall be allowed to see any serial number on the back of any ballot paper.

(*d*) The Returning Officer shall, as far as practicable, proceed continuously with the counting of the votes; and shall, during any necessary intervals during which the counting has to be suspended, place the ballot papers, packets and other documents relating to the election under his own seal and the seals of such candidates, or election agents as may desire to affix them, and shall cause adequate precautions to be taken for their custody.

Declaration of candidates elected.

67. When the counting of votes has been completed, the Returning Officer shall, subject to the provisions of paragraph 17 of Part I of the Order, forthwith declare the candidate or candidates to whom the largest number of valid votes has been given, to be elected:

Provided that upon the application of any candidate, or his election agent, or his representative duly authorised under sub-rule (5) of rule 8 a recount shall be made before the Returning Officer makes the declaration, but the Returning Officer may reject any such application as may appear to him to be frivolous recording at the same time the grounds for such rejection:

Provided also that in the Anglo-Indian constituency in which a seat is reserved for women the Returning Officer shall first declare to be elected the woman candidate to whom the largest number of valid votes has been given.

Grounds for rejection of ballot paper.

68. (1) A ballot paper shall be rejected if—

(*a*) it has not on its back the official mark,

(*b*) the number of votes recorded thereon exceeds the number of vacancies to be filled,

(*c*) no vote is recorded thereon,

(*d*) it is void for uncertainty,

(*e*) it bears any mark by which the elector can be identified.

(2) In the Anglo-Indian constituency in which a seat is reserved for women, a ballot paper shall also be rejected if the number of votes recorded thereon in favour of male candidates exceeds three.

(3) The decision of the Returning Officer as to the validity of a ballot paper shall be final, subject only to reversal on an election petition claiming the seat.

Verification of statements submitted by the presiding officers.

69. The Returning Officer shall not open the sealed packets of the tendered votes, the marked copy of the electoral roll or the countertoils of the ballot papers. He shall verify the statements submitted by the presiding officers under rule 43 by comparing them with the statement prepared under clause (*a*) of rule 66 and with the number of counted votes and rejected ballot papers, the unused ballot papers in his possession and the tendered votes list, shall then reclose and reseal each packet which has been opened by him, and shall record on each packet a description of its contents and date of the election to which it refers.

Special rules as to elections where in the constituency as a whole the method of voting by postal ballot applies.

70. At an election to fill a seat or seats in a European or the Anglo-Indian constituency where it has been decided under sub-rule (1) of rule 55 that the method of voting by postal ballot shall be followed in the constituency as a whole, rules 23 to 50 inclusive shall not be applicable and the following rules 71 to 79 shall be substituted therefor and shall apply.

Returning Officer to send ballot papers by post.

71. (1) On or before such date as may be fixed in this behalf by the Governor in his discretion, the Returning Officer shall send by registered post to each elector a ballot paper in form XX annexed to these rules and shall enter on the counterfoil of each ballot paper the name of the elector to whom the ballot paper is sent. With the ballot paper the Returning Officer shall also send a cover addressed to himself in form XXI annexed to these rules, an envelope with the number of the ballot paper entered on its face and a letter in form XXII annexed to these rules. The Returning Officer shall have the number of the ballot paper entered at the left-hand bottom corner of the cover in form XXI The ballot paper together with the cover, envelope and letter shall be sent to the address of the elector as shown in the electoral roll.

(2) At the time of sending a ballot paper to a person under sub-rule (1), the Returning Officer may interpret an entry in the electoral roll so as to overlook merely clerical or printing errors but shall record his reasons for doing so and the interpretation he has adopted on the counterfoil of the ballot paper issued to such person.

Election not to be invalid for failure to receive ballot paper when such a paper has been issued.

72. No election shall be invalidated by reason that an elector has not received his ballot paper, provided that a ballot paper has been issued to him in accordance with these rules.

Ballot paper to be returned after recording vote thereon.

73. An elector, on receipt of his ballot paper, if he desires to vote in the election, shall record his vote thereon and sign the declaration on its back in accordance with the instructions on the ballot paper and in the letter sent with the ballot paper. The elector shall then place the ballot paper in the envelope, close the envelope and enclose it in the cover and send the cover to the Returning Officer in accordance with the instructions contained in the letter so as to reach him before 5 p.m. on the date fixed in this behalf by the Governor in his discretion. Any cover which is not received by the Returning Officer before 5 p.m. on the date so fixed shall be rejected.

Recording of votes of illiterate and infirm electors.

74. If an elector is unable to read or write or by reason of some physical defect is incapacitated from recording his vote in the manner laid down in rule 73, it shall be competent for him to make his declaration and to record his vote by the hand of any magistrate to whom he is personally known or to whose satisfaction he has been identified; and such magistrate shall certify on the back of the ballot paper the elector's incapacity and shall attest the fact that he was requested by the elector to sign the declaration on the back of the ballot paper and to mark the ballot paper for him and that the ballot paper was so signed and marked by him in the presence of the elector.

Issue of undelivered and duplicate ballot papers, etc.

75. When a ballot paper and other connected papers sent by post under rule 71 are for any reason returned undelivered, the Returning Officer may reissue them by registered post or himself hand them over to the elector on his personally applying for the same, but duplicate ballot and other connected papers may not be issued except in cases where an elector has inadvertently dealt with his papers in such a manner that they cannot conveniently be used. In such cases, the elector may, on delivering the paper or papers personally to the Returning Officer and satisfying him of the inadvertence, obtain new paper or papers in place of the spoilt paper or papers and the latter shall together with, in the case of a spoilt ballot paper, its counterfoil be marked as cancelled by the Returning Officer.

Notification of dates fixed under sub-rule (1) of rule 71 and under rule 73.

76. The Governor exercising his individual judgment shall notify in such manner as he thinks fit, the dates fixed under sub-rule (1) of rule 71 and under rule 73.

Procedure in counting the votes and declaration of candidates elected.

77. (1) The Governor shall in his discretion appoint a date for the counting of votes. The Returning Officer shall fix a place and time at which the votes shall be counted on the date so appointed, and shall give notice of such date, time and place, in writing to all candidates and election agents.

If at the time appointed the Returning Officer from any unavoidable cause is unable to proceed with the counting of votes he shall with the previous consent of the Governor in his discretion postpone the counting to some other time and date appointed by the Governor in his discretion and shall give notice thereof in writing to the candidates and election agents.

(2) On the day and at the time and place appointed the Returning Officer shall first of all read the provisions of section 14 of the Indian Election Offences and Inquiries Act, 1920, to such persons as may be present and shall then— XXXIX of 1920.

(*a*) after scrutiny, separate, or cause to be separated, the ballot papers which he deems valid from those which he rejects, endorsing on the latter the word "rejected" and the ground of rejection;

(*b*) count, or cause to be counted, the votes given to each candidate, and, subject to the provisions of paragraph 17 of Part I of the Order, declare the candidate or candidates, with the largest number of valid votes to be elected; provided that in the Anglo-Indian constituency in which a seat is reserved for women the Returning Officer shall first declare to be elected the woman candidate to whom the largest number of valid votes has been given.

Grounds for declaring ballot paper invalid.

78. Any ballot paper which is not duly marked, or on which more than one mark is placed against any candidate's name, or on which votes are given to more candidates than there are members to be elected, or on which a mark is placed in such a manner as to make it doubtful to which candidate it has been given, or the declaration on the back of which has not been duly signed, shall be invalid. In the Anglo-Indian constituency in which a seat is reserved for women a ballot paper shall also be invalid if the number of votes recorded thereon in favour of male candidates exceeds three.

Return by the Returning Officer.

79. Upon the completion of counting the Returning Officer shall prepare and certify a return in form XVIII annexed to these rules setting forth—

(*i*) the names of candidates for whom valid votes have been given;

(*ii*) the number of valid votes given for each candidate;

(*iii*) the number of votes declared invalid and rejected;

(*iv*) the names of the persons declared elected;

and shall permit any candidate, or his election agent, or his representative duly authorised under sub-rule (5) of rule 8 to take a copy of, or an extract from, the return.

The Returning Officer shall also seal up in separate packets the counted and rejected ballot papers, and record on each such packet a description of its contents and the name of the constituency and the date of the election to which it refers.

Special rules as to elections where in certain electoral areas of the constituency

80. At an election to fill a seat or seats in a European or the Anglo-Indian constituency where it has been decided under sub-rule (1) of rule 55 that the method of voting by ballot boxes shall be followed in certain electoral areas thereof and the method of voting by postal ballot shall be followed in other electoral

the method of voting by ballot boxes applies and in other electoral areas of the constituency the method of voting by postal ballot applies.

areas thereof, then with regard to voting in the electoral areas in which the method of voting by ballot boxes shall be followed rules 27, 28, 31, 33, 34, 36, 37, 40 and 41 shall not be applicable and rules 57, 58, 59, 60, 61, 62, 63, 64 and 65 shall respectively be substituted therefor and shall apply, and with regard to voting in electoral areas in which the method of voting by postal ballot shall be followed rules 23 to 43 shall not be applicable and rules 71 to 76 shall be substituted therefor and shall apply, and with regard to the counting of votes rules 44 to 50 shall not be applicable and the following rules 81 to 87 shall be substituted therefor and shall apply.

Appointment of time, place and date for the counting of votes.

81. (1) The Governor shall in his discretion appoint a date for the counting of votes. The Returning Officer shall fix a place and time at which the votes shall be counted on the date so appointed, and shall give notice of such date, time and place, in writing to all candidates and election agents.

(2) If at the time appointed, all the ballot boxes have not been received by the Returning Officer or if from any other unavoidable cause he is unable to proceed with the counting of votes, he shall with the previous consent of the Governor in his discretion postpone the counting to some other time and date appointed by the Governor in his discretion, and shall give notice thereof in writing to the candidates and election agents.

Persons who may be present at the counting of votes.

82. (1) No person shall be allowed to be present at the counting of votes except the Returning Officer and such persons as he may appoint to assist him in counting the votes, and such other persons as have a right to be present under sub-rule (5) of rule 8.

(2) No person shall be appointed to assist in counting the votes, who has been employed by or on behalf of any candidate for any purpose whatsoever connected with the election.

Procedure to be followed in counting the votes.
XXXIX of 1920.

83. On the date and at the time appointed under rule 81 the Returning Officer shall, before he commences to count the votes, read the provisions of section 14 of the Indian Election Offences and Inquiries Act, 1920, to such persons as may be present.

He shall then with respect to ballot boxes received from electoral areas of the constituency where the method of voting by ballot boxes has been followed proceed in the manner laid down in clauses (*a*) to (*d*) of rule 66, provided that the statement prepared by him under clause (*a*) of that rule shall not be shewn to any candidate, or his agent, or his representative duly authorised under sub-rule (5) of rule 8 until after the verification provided for in sub-rule (1) of rule 86.

After completing the counting of ballot papers contained in all the ballot boxes the Returning Officer shall with respect to ballot

papers received by him from electoral areas of the constituency where the method of voting by postal ballot was followed proceed as follows:—

(*a*) The Returning Officer shall after scrutiny, separate, or cause to be separated, the ballot papers which he deems valid from those which he rejects, endorsing on the latter the word "rejected" and the ground of rejection;

(*b*) The Returning Officer shall then count, or cause to be counted, the votes given to each candidate.

Declaration of candidates elected.

84. When the counting of votes recorded in favour of each candidate both in ballot papers contained in the ballot boxes and in ballot papers received from electoral areas where the method of voting by postal ballot was followed has been completed the Returning Officer shall, subject to the provisions of paragraph 17 of Part I of the Order, forthwith declare the candidate or candidates to whom the largest number of total valid votes has been given, to be elected:

Provided that in the Anglo-Indian constituency in which a seat is reserved for women the Returning Officer shall first declare to be elected the woman candidate to whom the largest number of total valid votes has been given.

Grounds for rejection of ballot papers.

85. (1) A ballot paper contained in the ballot boxes shall be rejected on any of the grounds set forth in sub-rules (1) and (2) of rule 68.

(2) A ballot paper received from electoral areas where the method of voting by postal ballot was followed shall be declared invalid on any of the grounds set forth in rule 78.

(3) The decision of the Returning Officer as to the validity of a ballot paper shall be final, subject only to reversal on an election petition claiming the seat.

Verification of statements submitted by presiding officers and sealing up of ballot papers.

86. (1) Of the election papers received under rule 42 from electoral areas where the method of voting by ballot boxes was followed the Returning Officer shall not open the sealed packets of the tendered votes, the marked copy of the electoral roll or the counterfoils of the ballot papers. He shall verify the statements submitted by the presiding officers under rule 43 by comparing with the statement prepared under rule 83 in accordance with clause (*a*) of rule 66 and with the number of counted votes and rejected ballot papers, the unused ballot papers in his possession and the tendered votes list, shall then reclose and re-seal each packet which has been opened by him, and shall record on each packet a description of its contents and the date of the election to which it refers.

(2) The Returning Officer shall then seal up in separate packets the counted and rejected ballot papers received by him from electoral areas where the method of voting by postal ballot was followed, and record on each such packet a description of its contents and the name of the constituency and the date of the election to which it refers.

Return by the Returning Officer.

87. The Returning Officer shall then prepare and certify a return in form XVIII annexed to these rules setting forth—

(1) the names of the candidates for whom valid votes have been given,

(2) the total number of valid votes given for each candidate,

(3) the total number of votes declared invalid,

(4) the number of tendered votes,

(5) the result of the verification referred to in sub-rule (1) of rule 86,

(6) the names of the candidates elected,

and shall permit any candidate, or his election agent, or his representative duly authorised under sub-rule (5) of rule 8 to take a copy of, or an extract from, such return.

Part VIII.—Special Rules for voting and the counting of votes applicable to University Constituencies.

Special rules for voting and the counting of votes in a University constituency.

88. In the case of an election for a University constituency rules 23 to 50 inclusive shall not be applicable, and the following rules 89 to 97 inclusive shall be substituted therefor and shall apply.

Returning Officer to send ballot papers by post.

89. (1) On or before such date as may be fixed in this behalf by the Governor in his discretion, the Returning Officer shall send by registered post to each elector a ballot paper in form XXIII annexed to these rules and shall enter on the counterfoil of each ballot paper the name of the elector to whom the ballot paper is sent. With the ballot paper the Returning Officer shall also send a cover addressed to himself in form XXI annexed to these rules, an envelope with the number of the ballot paper entered on its face and a letter in form XXIV annexed to these rules. The Returning Officer shall have the number of the ballot paper entered at the left-hand bottom corner of the cover in form XXI. The ballot paper together with the cover, envelope and letter shall be sent to the address of the elector, as shown in the electoral roll.

(2) At the time of sending a ballot paper to a person under sub-rule (1), the Returning Officer may interpret an entry in the electoral roll so as to overlook merely clerical or printing errors but shall record his reasons for doing so and the interpretation he has adopted on the counterfoil of the ballot paper issued to such person.

Election not to be invalid for failure to receive ballot paper when such a paper has been issued.

90. No election shall be invalidated by reason that an elector has not received his ballot paper, provided that a ballot paper has been issued to him in accordance with these rules.

Attestation of an elector's signature on ballot paper.

91. An elector shall obtain the attestation of his signature, and declaration but not of his vote, by a Magistrate, Fellow of the University which constitutes the constituency, member of the

University Court or principal of a college affiliated to the University which constitutes the constituency, to whom he is personally known or to whose satisfaction he has been identified.

Ballot paper to be returned after recording vote thereon.

92. An elector, on receipt of his ballot paper, if he desires to vote in the election, shall record his vote thereon and sign the declaration on its back in accordance with the instructions on the ballot paper and in the letter sent with the ballot paper. The elector shall then place the ballot paper in the envelope, close the envelope and enclose it in the cover and send the cover to the Returning Officer in accordance with the instructions contained in the letter so as to reach him before 5 p.m. on the date fixed in this behalf by the Governor in his discretion. Any cover which is not received by the Returning Officer before 5 p.m. on the date so fixed shall be rejected.

Attesting Officer to assist infirm electors.

93. If an elector is incapacitated from blindness or other physical cause from voting in the manner laid down in rule 92, it shall be competent for him to make his declaration and to record his vote by the hand of any officer empowered to attest the signature and declaration and such officer shall certify on the back of the ballot paper the elector's incapacity and shall attest the fact that he was so requested by the elector to sign the declaration on the back of the ballot paper and to mark the ballot paper for him and that the ballot paper was so signed and marked by him in the presence of the elector.

Grounds for declaring ballot papers invalid.

94. Any ballot paper which is not duly marked, or on which more than one mark is placed against any candidate's name, or on which votes are given to more candidates then one, or on which a mark is placed in such a manner as to make it doubtful to which candidate it has been given, or on which the signature of the elector is not duly attested, shall be invalid.

Issue of undelivered and duplicate ballot papers.

95. When a ballot paper and other connected papers sent by post under rule 89 are for any reason returned undelivered, the Returning Officer may reissue them by registered post or himself hand them over to the elector on his personally applying for the same, but duplicate ballot and other connected papers may not be issued except in cases where an elector has inadvertently dealt with his papers in such a manner that they cannot conveniently be used. In such cases the elector may, on delivering the paper or papers personally to the Returning Officer and satisfying him of the inadvertence, obtain new paper or papers in place of the spoilt paper or papers and the latter shall together with, in the case of a spoilt ballot paper, its counterfoil be marked as cancelled by the Returning Officer.

Procedure to be followed in counting the votes.

96. (1) The Governor shall in his discretion appoint a date for the counting of votes. The Returning Officer shall fix a place and time at which the votes shall be counted on the date so appointed, and shall give notice of such date, time and place, in writing to all candidates and election agents.

If at the time appointed the Returning Officer from any unavoidable cause is unable to proceed with the counting of votes, he shall with the previous consent of the Governor in his discretion postpone the counting to some other time and date

appointed by the Governor in his discretion and shall give notice thereof in writing to the candidates and election agents.

(2) On the day and at the time and place appointed the Returning Officer shall first of all read the provisions of section 14 of the Indian Election Offiences and Inquiries Act, 1920, to such persons as may be present and shall then—

XXXIX of 1920.

(*a*) after scrutiny, separate, or cause to be separated, the ballot papers which he deems valid from those which he rejects, endorsing on the latter the word "rejected" and the ground of rejection;

(*b*) count, or cause to be counted, the votes given to each candidate, and, subject to the provisions of paragraph 17 of Part I of the Order, declare the candidate, with the largest number of valid votes to be elected;

(*c*) upon the completion of counting, prepare and certify a return in form XVIII annexed to these rules setting forth—

(*i*) the names of candidates for whom valid votes have been given;

(*ii*) the number of valid votes given for each candidate;

(*iii*) the number of votes declared invalid and rejected;

(*iv*) the name of the person declared elected;

(*d*) permit any candidate, or his election agent, or his representative duly authorised under sub-rule (5) of rule 8 to take a copy of, or an extract from, the return; and

(*e*) seal up in separate packets the counted and rejected ballot papers and record on each such packet a description of its contents and the name of the constituency and the date of the election to which it refers.

Notification of dates fixed under sub rule (*i*) of rule 89 and under rule 92.

97. The Governor exercising his individual judgment shall notify in such manner as he thinks fit the dates fixed under sub-rule (1) of rule 89 and under rule 92.

Part IX.—Special Rules for voting and the counting of votes applicable to Commerce and Industry and Landholders' constituencies.

Special rules for voting and the counting of votes in a commerce and industry or landholders' constituency.

98. In the case of an election for a commerce and industry or landholders' constituency rules 23 to 50 inclusive shall not be applicable, and the following rules 99 to 108 inclusive shall be substituted therefor and shall apply.

Returning Officer to send ballot papers by post.

99. (1) On or before such date as may be fixed by the Governor in his discretion in this behalf, the Returning Officer shall send by registered post to each elector a ballot paper and shall enter on the counterfoil of each ballot paper the name of the elector to whom the ballot paper is sent. With the ballot paper the

Returning Officer shall also send an envelope in form XXI annexed to these rules with the number of the ballot paper entered at its left-hand bottom corner and a letter in the case of a commerce and industry constituency in form XXV and in the case of a landholders' constituency in form XXVI annexed to these rules. The ballot paper together with the envelope and letter shall be sent to the address of the elector as shown in the electoral roll:

Provided that in the case of a commerce and industry constituency where the nominee or nominees of a firm, corporation or Hindu joint family are entered on the electoral roll of the constituency as an elector or electors, the Returning Officer shall send only one ballot paper together with one of each of the above connected papers to such firm, corporation or Hindu joint family to the address of its office as given in the electoral roll instead of to the nominee or nominees thereof, and shall enter on the counterfoil of the ballot paper so sent the name of such firm, corporation or Hindu joint family together with the names of its nominees as shown on the electoral roll.

(2) At the time of sending a ballot paper to a person under sub-rule (1), the Returning Officer may interpret an entry in the electoral roll so as to overlook merely clerical or printing errors but shall record his reasons for doing so and the interpretation he has adopted on the counterfoil of the ballot paper issued to such person.

(3) The form of the ballot paper in the case of a commerce and industry constituency, shall be in form XXVII annexed to these rules, and in the case of a landholders' constituency, in form XXVIII annexed to these rules.

Election not to be invalid for failure to receive ballot paper when such a paper has been issued.

100. No election shall be invalidated by reason that an elector has not received his ballot paper, provided that a ballot paper has been issued to him in accordance with these rules.

Attestation of elector's signature on ballot paper.

101. Upon receipt of his ballot paper each elector desirous of recording his vote shall, on or before such date as may be fixed in this behalf by the Governor in his discretion, but not later than 5 p.m. on that date, sign the declaration on the back of the ballot paper in the presence and at the office of an Attesting Officer, and the Attesting Officer shall thereupon attest his signature:

Provided that in the case where the ballot paper is sent under rule 99 to a firm, corporation or Hindu joint family the vote shall be recorded and the declaration on the ballot paper shall be signed under this rule by one only of the nominees entered in the electoral roll, of such firm, corporation or Hindu joint family.

Recording of votes by the elector.

102. The elector shall then proceed to a place set apart for that purpose by the Attesting Officer, and screened from observation, and there shall record his vote or votes on the ballot paper in accordance with the instructions contained therein and in the letter sent with the ballot paper, and after placing the ballot paper in the envelope, and closing the same, shall deliver it to the Attesting Officer.

Attesting Officer to assist illiterate and infirm electors.

103. If an elector is unable to read or write, or by reason of some physical defect is incapacitated from recording his vote, the Attesting Officer shall assist him in such manner as may be necessary to mark the ballot paper and to sign the declaration thereon.

Attesting Officer to despatch ballot papers delivered to him to Returning Officer.

104. The Attesting Officer shall, as soon as possible after 5 p.m. of the day fixed as the latest date for the attestation of ballot papers, despatch all the envelopes so delivered to him to the Returning Officer by registered post in a packet securely sealed with his official seal, and shall also enclose a list, in form XXIX annexed to these rules, of the electors whose ballot papers he has attested.

Grounds on which ballot papers shall be deemed invalid.

105. A ballot paper that is not duly attested, or marked, or on which more marks are placed against any candidate's name than there are members to be elected, or on which votes are given to more candidates than there are members to be elected, or on which a mark is placed in such a manner as to render it doubtful to which candidate it has been given, shall be invalid.

Issue of undelivered and duplicate ballot papers.

106. When a ballot paper and other connected papers sent by post under rule 99 are for any reason returned undelivered, the Returning Officer may reissue them by registered post or himself hand them over to the elector on his personally applying for the same, but duplicate ballot and other connected papers may not be issued except in cases where an elector has inadvertently dealt with his papers in such a manner that they cannot conveniently be used. In such cases the elector may, on delivering the paper or papers personally to the Returning Officer and satisfying him of the inadvertence, obtain new paper or papers in place of the spoilt paper or papers and the latter shall together with, in the case of a spoilt ballot paper, its counterfoil be marked as cancelled by the Returning Officer:

Provided that in the case of a firm, corporation or Hindu joint family, undelivered or duplicate ballot and other connected papers under this rule may only be issued on the application of such firm, corporation or Hindu joint family to its address as given in the electoral roll, or delivered to a representative authorised in writing by it on his personally applying for the same.

Procedure to be followed in counting the votes.

107. (1) The Governor shall in his discretion appoint a date for the counting of votes, The Returning Officer shall fix a place and time at which the votes shall be counted on the date so appointed, and shall give notice of such date, time and place, in writing to all candidates and election agents.

If at the time appointed the Returning Officer from any unavoidable cause is unable to proceed with the counting of votes, he shall with the previous consent of the Governor in his discretion postpone the counting to some other time and date appointed by the Governor in his discretion and shall give notice thereof in writing to the candidates and election agents.

XXXIX of 1920.

(2) On the day and at the time and place appointed, the Returning Officer shall first of all read the provisions of section 14 of the Indian Election Offences and Inquiries Act, 1920, to such persons as may be present and shall then examine the back of each

ballot paper and reject the ballot papers which are not duly attested endorsing thereon the word "rejected" and the ground of rejection, and then shall fold the lower portion of every ballot paper, along the dotted line on the back so as to conceal the names of the elector and of the Attesting Officer and shall seal down the portion thus folded with the official seal and thereafter shall—

(*a*) after scrutiny, separate or cause to be separated, the ballot papers which he deems valid from those which he has rejected as not being duly attested, and also those which he then rejects on any other ground endorsing on the ballot papers which he then rejects the word "rejected" and the ground of rejection, and if necessary on the ballot papers which he has previously rejected, any other additional ground of rejection;

(*b*) count, or cause to be counted, the votes given to each candidate and, subject to the provisions of paragraph 17 of Part I of the Order, declare the candidate, with the largest number of valid votes, to be elected;

(*c*) upon the completion of the counting, prepare and certify a return in form XVIII annexed to these rules setting forth –

(*i*) the names of candidates for whom valid votes have been given;

(*ii*) the number of valid votes given for each candidate;

(*iii*) the number of votes declared invalid and rejected;

(*iv*) the names of the persons declared elected;

(*d*) permit any candidate, or his election agent, or his representative duly authorised under sub-rule (5) of rule 8 to take a copy of, or an extract from, the return; and

(*e*) seal up in separate packets the counted and rejected ballot papers, and record on each such packet a description of its contents and the name of the constituency and the date of the election to which it refers.

Notification of dates fixed under sub-rule (1) of rule 99 and under rule 101.

108. The Governor exercising his individual judgment shall notify in such manner as he thinks fit the date fixed under sub-rule (1) of rule 99 for sending ballot papers to electors and the date fixed under rule 101 for the attestation of ballot papers.

Part X.—Special Rules for voting and the counting of votes applicable to Trade Union Constituencies.

Special rules for voting and the counting of votes in a trade union constituency.

109. In the case of an election for a trade union constituency rules 23 to 50 inclusive shall not be applicable, and the following rules 110 to 119 inclusive shall be substituted therefor and shall apply.

Returning Officer to send ballot papers by post.

110. (1) On or before such date as may be fixed in this behalf by the Governor in his discretion, the Returning Officer shall send by registered post to each elector in the Water Transport Trade Union constituency, and to each member of the electoral college chosen under Part IV of these rules in the Railway Trade Union constituency, a ballot paper in form XXX annexed to these rules and shall enter on the counterfoil of each ballot paper, the name of the elector or the member to whom the ballot paper is sent. With the ballot paper the Returning Officer shall also send an envelope in form XXI annexed to these rules with the number of the ballot paper entered at its left-hand bottom corner and a letter in form XXVI annexed to these rules. The ballot paper together with the envelope and letter shall be sent to the address of the elector or the member as shown in the electoral roll of the constituency.

(2) At the time of sending a ballot paper to a person under sub-rule (1), the Returning Officer may interpret an entry in the electoral roll so as to overlook merely clerical or printing errors but shall record his reasons for doing so and the interpretation he has adopted on the counterfoil of the ballot paper issued to such person.

Election not to be invalid for failure to receive ballot paper when such a paper has been issued.

111. No election shall be invalidated by reason that an elector or a member of the electoral college has not received his ballot paper, provided that a ballot paper has been issued to him in accordance with these rules.

Attestation of elector's or member's signature on ballot paper.

112. Upon receipt of his ballot paper each elector or member of the electoral college, as the case may be, desirous of recording his vote shall, on or before such date as may be fixed in this behalf by the Governor in his discretion, but not later than 5 p.m. on that date, sign the declaration on the back of the ballot paper in the presence and at the office of an Attesting Officer, and the Attesting Officer shall thereupon attest his signature.

Recording of votes by the elector or by the member of an electoral college.

113. The elector or the member of the electoral college, as the case may be, shall then proceed to a place set apart for that purpose by the Attesting Officer, and screened from observation, and there shall record his vote on the ballot paper in accordance with the instructions contained therein and in the letter sent with the ballot paper, and after placing the ballot paper in the envelope, and closing the same, shall deliver it to the Attesting Officer.

Attesting Officer to assist illiterate and infirm electors or members of electoral college.

114. If an elector or a member of the electoral college, as the case may be, is unable to read or write, or by reason of some physical defect is incapacitated from recording his vote, the Attesting Officer shall assist him in such manner as may be necessary to mark the ballot paper and to sign the declaration thereon.

Attesting Officer to despatch ballot papers delivered to him to Returning Officer.

115. The Attesting Officer shall, as soon as possible after 5 p.m. of the day fixed as the latest date for the attestation of ballot papers, despatch all the envelopes so delivered to him to the Returning Officer by registered post in a packet securely sealed with his official seal, and shall also enclose a list, in form XXIX annexed to these rules, of the electors or members of the electoral college whose ballot papers he has attested.

Grounds on which ballot papers shall be deemed invalid.

116. A ballot paper that is not duly attested, or marked, or on which more marks are placed against any candidate's name than there are members to be elected, or on which votes are given to more candidates than there are members to be elected, or on which a mark is placed in such a manner as to render it doubtful to which candidate it has been given, shall be invalid.

Issue of undelivered and duplicate ballot papers.

117. When a ballot paper and other connected papers sent by post under rule 110 are for any reason returned undelivered, the Returning Officer may reissue them by registered post or himself hand them over, in the case of the Water Transport Trade Union constituency, to the elector, or, in the case of the Railway Trade Union constituency, to the member of the electoral college, on his personally applying for the same, but duplicate ballot and other connected papers may not be issued except in cases where an elector or a member of the electoral college has inadvertently dealt with his papers in such a manner that they cannot conveniently be used. In such cases the elector or the member of the electoral college may, on delivering the paper or papers personally to the Returning Officer and satisfying him of the inadvertence, obtain new paper or papers in place of the spoilt paper or papers and the latter shall together with, in the case of a spoilt ballot paper, its counterfoil be marked as cancelled by the Returning Officer.

Procedure to be followed in counting the votes.

118. (1) The Governor shall in his discretion appoint a date for the counting of votes. The Returning Officer shall fix a place and time at which the votes shall be counted on the date so appointed, and shall give notice of such date, time and place, in writing to all candidates and election agents.

If at the time appointed the Returning Officer from any unavoidable cause is unable to proceed with the counting of votes, he shall with the previous consent of the Governor in his discretion postpone the counting to some other time and date appointed by the Governor in his discretion and shall give notice thereof in writing to the candidates and election agents.

(2) On the day and at the time and place appointed the Returning Officer shall first of all read the provisions of section 11 of the Indian Election Offences and Inquiries Act, 1920, to such persons as may be present and shall then examine the back of each ballot paper and reject the ballot papers which are not duly attested endorsing thereon the word "rejected" and the ground of rejection, and then shall fold the lower portion of every ballot paper along the dotted line on the back so as to conceal the names of the elector or the member of the electoral college and of the Attesting Officer and shall seal down the portion thus folded with the official seal and thereafter shall— XXXIX of 1920.

(*a*) after scrutiny, separate or cause to be separated, the ballot papers which he deems valid from those which he has rejected as not being duly attested, and also those which he then rejects on any other ground endorsing on the ballot papers which he then rejects the word "rejected" and the ground of rejection, and if necessary on the ballot papers which he has previously rejected, any other additional ground of rejection;

(*b*) count or cause to be counted, the votes given to each candidate and, subject to the provisions of paragraph 17 of Part I of the Order, declare the candidate, with the largest number of valid votes to be elected;

(*c*) upon the completion of the counting, prepare and certify a return in form XVIII annexed to these rules setting forth—

(*i*) the names of candidates for whom valid votes have been given;

(*ii*) the number of valid votes given for each candidate;

(*iii*) the number of votes declared invalid and rejected; and

(*iv*) the name of the person declared elected;

(*d*) permit any candidate, or his election agent, or his representative duly authorised under sub-rule (5) of rule 8 to take a copy of, or an extract from, the return; and

(*e*) seal up in separate packets the counted and rejected ballot papers, and record on each such packet a description of its contents and the name of the constituency and the date of the election to which it refers.

Notification of dates fixed under sub-rule (1) of rule 110 and under rule 112.

119. The Governor exercising his individual judgment shall notify in such manner as he thinks fit the date fixed under sub-rule (1) of rule 110 for sending ballot papers to electors and members of the electoral college and the date fixed under rule 112 for the attestation of ballot papers.

Part XI.—Vacation of seats and notification of casual vacancies.

Seats in the Assembly when to become vacant in case of election of the same person to more than one seat.

120. If a person is elected to more than one seat in the Bengal Legislative Assembly, then unless within seven days from the date of the publication in the Gazette of the declarations containing the names of that person as having been so elected, or, where such publication has been made on different dates, unless within seven days from the latest of such dates, such person resigns all but one of the seats, all the said seats shall become vacant.

Casual vacancies.

121. (1) When the seat of a member becomes vacant or is declared vacant, or the election of a member is declared void, the Governor exercising his individual judgment shall, subject to the provisions of sub-rule (2) and sub-rule (3), by notification in the Gazette, call upon the constituency concerned to elect a person, for the purpose of filling the vacancy so caused, within such time as may be fixed in this behalf by the Governor in his discretion and specified in the notification and these rules shall apply, as far as may be, to the procedure for the election of a member to fill such vacancy.

(2) If the vacancy so caused be a vacancy in a seat in the Railway Trade Union constituency the Governor exercising his

individual judgment shall, first, by a notification in the Gazette, call upon the constituency to choose at a primary election under these rules an electoral college in accordance with the provisions of paragraph 21 of Part IV of the Order within such time as may be fixed in this behalf by the Governor in his discretion and specified in that notification and then, not later than fifteen days after the declaration of the result of such primary election, by another notification in the Gazette, call upon the constituency to elect a person for the purpose of filling the vacancy so caused within such time as may be fixed in this behalf by the Governor in his discretion and specified in such notification.

(3) If the vacancy so caused be a vacancy in a seat reserved in a constituency for members of the Scheduled Castes the Governor exercising his individual judgment shall, first, by a notification in the Gazette, call upon members of the Scheduled Castes who are entitled to vote in that constituency to elect at a primary election under these rules four candidates for the said seat within such time as may be fixed in this behalf by the Governor in his discretion and specified in that notification and then not later than fifteen days after the declaration of the result of such primary election, by another notification in the Gazette, call upon the constituency concerned to elect a person for the purpose of filling the vacancy so caused within such time as may be fixed in this behalf by the Governor in his discretion and specified in such notification:

Provided that where the election of all the candidates elected at a primary election held in pursuance of a notification issued under this rule is declared void at an election enquiry, the Governor exercising his individual judgment shall again, by a notification in the Gazette, call upon members of the Scheduled Castes who are entitled to vote in the constituency concerned to elect at a fresh primary election under these rules four candidates for the said vacant seat within such time as may be fixed in this behalf by the Governor in his discretion and specified in that notification and the notification under this rule calling upon the said constituency to elect a person for the purpose of filling the vacancy shall be issued not later than fifteen days after the declaration of the result of such fresh primary election.

Part XII.—General election.

General election

122. (1) A general election shall be held for the purpose of constituting the Legislative Assembly of the Province under the Act in due time. A general election shall also be held on the expiration of the duration of an Assembly or on its dissolution in order that a new Assembly may be constituted.

(2) For the purpose of constituting the Legislative Assembly of the Province under the Act in due time, or on the expiration of the duration of an Assembly, or on its dissolution, the Governor exercising his individual judgment shall, by a notification in the Gazette call upon the Railway Trade Union constituency to choose at a primary election under these rules an electoral college in accordance with the provisions of paragraph 21 of Part IV of the Order within such time as may be fixed in this behalf by the

Governor in his discretion and specified in that notification and shall by another notification, call upon members of the Scheduled Castes who are entitled to vote in a constituency in which a seat or seats are reserved for members of those castes to elect at a primary election under these rules four candidates for each seat so reserved within such time as may be fixed in this behalf by the Governor in his discretion and specified in that notification, and not later than fifteen days after the latest date of the dates of declaration of the results of all such primary elections the Governor exercising his individual judgment shall, by another notification in the Gazette, call upon every constituency including the Railway Trade Union constituency and the constituencies in which any seat or seats are reserved for members of the Scheduled Castes, to elect a member or members in accordance with these rules within such time as may be fixed in this behalf by the Governor in his discretion and specified in such notification:

Provided that if the Governor exercising his individual judgment thinks fit, the first of the said notifications may be issued at any time not being more than four months prior to the date on which the duration of the Assembly would expire in the ordinary course of events:

Provided further that for the first general election to be held under the Act for the purpose of constituting the Legislative Assembly of the Province in due time any of the said notifications may be issued at any time when the Governor exercising his individual judgment thinks fit:

Provided also that where the election of all the candidates elected at a primary election held in pursuance of a notification issued under this rule is declared void at an election enquiry, the Governor exercising his individual judgment shall again, by a notification in the Gazette, call upon members of the Scheduled Castes who are entitled to vote in the constituency concerned to elect at a fresh primary election under these rules four candidates for each of the reserved seats within such time as may be fixed in this behalf by the Governor in his discretion and specified in that notification and the notification under this rule calling upon the constituency concerned to elect a member or members shall be issued not later than fifteen days after the declaration of the result of such fresh primary election.

Publication of result of general election.

123. As soon as may be after the expiration of the time fixed for the election of members at any general election, the names of the members elected for the various constituencies at such election shall be notified in the Gazette.

Part XIII.—Custody and preservation of election papers.

Custody and preservation of certain election papers.

124. (1) The papers mentioned in the first column of Schedule III hereto annexed shall be kept in the custody mentioned in the second column thereof for the period specified in the third column thereof, unless their retention for a longer period is otherwise ordered by competent authority.

(2) The public shall have a right to inspect the election papers mentioned in Schedule III and to get attested copies thereof on payment of the fees laid down in the Bengal Records Manual, 1917.

Part XIV.—Special provisions.

Powers of Governor in case of difficulty.

125. If any difficulty arises as to the holding of any election under the provisions of these rules, or of the Act, or of any Order or other rule made under the Act, or of any Act of the Provincial Legislature, the Governor exercising his individual judgment may by order do anything not inconsistent with such provisions which appears to him to be necessary for the proper holding of the election.

Interpretation in case of doubt.

126. If any question arises as to the interpretation of these rules otherwise than in connection with an election inquiry held under the Act or any Order or rule made thereunder, or under an Act of the Provincial Legislature, the question shall be referred for the decision of the Governor exercising his individual judgment, and his decision shall be final.

FORM I.

Form of Notice.

[Rule 4(3).]

Whereas the constituency of the Bengal Legislative Assembly has been called upon by notification to elect a member (members) on or before , I, , the Returning Officer of the said constituency, do hereby give the following:—

Public Notice.

(*i*) The number of persons to be elected is

(*ii*) Nomination papers may be delivered to the undersigned at (office) or if he is unavoidably prevented from receiving the same to at . They should be presented between 11 a.m. and 3 p.m., on or before (date).

(*iii*) Forms of nomination paper may be obtained at the offices of the persons abovementioned between the hours of (hour) and (hour) from (date) to (date).

(*iv*) The nomination papers will be taken up for scrutiny at (hours) on (date) in (place).

*(*v*) In the event of the election being contested, the poll will take place on between the hours of and with an interval of rest between and

Returning Officer.

Date

Address

*This will be omitted in the case of constituencies in which the method of voting by postal ballot shall be followed.

FORM II.

Form of Notice of withdrawal.

[Rule 4(11).]

Bengal Legislative Assembly,

.....*Constituency.*

I, of

a candidate nominated at the present election/primary election in the above constituency do hereby give the Returning Officer notice that I withdraw my candidature.

Dated this *day of* *193* .

Signature of candidate.

I, of

who subscribed the nomination paper of the above candidate as proposer agree to his withdrawal of candidature.

Dated this *day of* *193* .

Signature of proposer.

I, of

who subscribed the nomination paper of the above candidate as seconder agree to his withdrawal of candidature.

Dated this *day of* *193* .

Signature of seconder.

This notice of withdrawal was delivered to me at my office at (date and hour) by the candidate/proposer/seconder.

Returning Officer or other authorised person.

FORM III.

[Rules 8(1) and 15.]

Bengal Legislative Assembly.

.....*Constituency.*

Final list of candidates for election.

Serial No.	Name of candidate.	Address of candidate.	Symbol assigned to the candidate, if any.
1			
2			
3			
4			

etc., etc., etc.

*NOTE.—The poll will be taken on the day of 19 between and at the polling stations to be notified separately.

Returning Officer.

†*This note will be omitted in the case of constituencies in which the method of voting by postal ballot shall be followed.

N. B.—Names marked with dagger are of the candidates for seats reserved for members of the Scheduled Castes.

FORM IV.

Form of Notice.

[Rule 9(3).]

Whereas in the rural (General) constituency of the Bengal Legislative Assembly a seat (seats) has (have) been reserved for members of the Scheduled Castes;

And whereas members of those castes who are entitled to vote in the said constituency have been called upon by notification to elect at a primary election four candidates for the seat (each seat) so reserved on or before ;

I, , the Returning Officer of the said constituency do hereby give the following:—

Public Notice.

(*i*) The maximum number of candidates to be elected is

(*ii*) Nomination papers may be delivered to the undersigned at (office) or if he is unavoidably prevented from receiving the same to at . They should be presented between 11 a.m. and 3 p.m. on or before (date).

(*iii*) Forms of nomination paper may be obtained at the offices of the persons abovementioned between the hours of (hour) and (hour) from (date) to (date).

(*iv*) The nomination papers will be taken up for scrutiny at (hours) on (date) in (place)

(*v*) In the event of the election being contested the poll will take place on between the hours of and with an interval of rest between and

Returning Officer.

Date

Address

FORM V.

[Rule 12(1).]

Primary election for the election of candidates for a seat (seats) reserved for members of the Scheduled Castes.

Constituency. *Bengal Legislative Assembly.*

Final list of candidates for the primary election.

Serial No.	Name of candidate.	Address of candidate.	Symbol assigned to the candidate.
1			
2			
3			
4			

etc., etc., etc.

NOTE.—The poll will be taken on the day of 19 between and at the polling stations to be notified separately.

Returning Officer.

FORM VI.

Form of Notice.

[Rule 20(3).]

Whereas the Railway Trade Union constituency of the Bengal Legislative Assembly has been called upon by notification to choose at a primary election an electoral college on or before , I, , the Returning Officer of the said constituency, do hereby give the following :—

Public Notice.

(*i*) The number of persons to be elected in the electoral unit formed by union is

(*ii*) Nomination papers may be delivered to the undersigned at (office). They should be presented between 11 a.m. and 3 p.m. on or before (date).

(*iii*) Forms of nomination paper may be obtained at the office of the undersigned between the hours of (hour) and (hour) from (date) to (date).

(*iv*) The nomination papers will be taken up for scrutiny at (hours) on (date) in (place).

*(*v*) In the event of the election being contested, the poll will take place on between the hours of and with an interval of rest between and

Returning Officer for the electoral unit.

Date

Address

*This will be omitted in the case of electoral units in which the method of voting by postal ballot shall be followed.

FORM VII.

[Rule 21(1).]

Bengal Legislative Assembly.

Primary election to choose an electoral college in the Railway Trade Union constituency.

.....*Electoral unit.*

Final list of candidates for the primary election.

Serial No.	Name of candidate.	Address of candidate.	Symbol assigned to the candidate, if any.
1			
2			
3			
4			

etc., etc., etc.

*NOTE.—The poll will be taken on the day of 19 between and at the polling stations to be notified separately.

Returning Officer for the electoral unit.

*This note will be omitted in the case of electoral units in which the method of voting by postal ballot shall be followed.

FORM VIII.

Form of ballot paper.

[Rule 22(4).]

Primary election for choosing an electoral college in..... electoral unit.

Counterfoil No.....		
Name of elector and number on the electoral roll.....		
....		

Instructions.

1. Votes shall be recorded by placing a mark on the ballot paper opposite the name of the candidate for whom the elector wishes to vote and the declaration on the back of the form shall be signed by the elector.

2. Not more than one vote may be given by the elector.

(Form of back of ballot paper.)

I hereby declare that I am the person whose name appears as Serial No..... ....on the electoral roll for the electoral unit formed by..... union.

....

Signature of elector.

Address.....

FORM IX.

[Rule 22(4).]

Primary election to choose an electoral college in the Railway Trade Union constituency of the Bengal Legislative Assembly.

Electoral unit

Poll on

To

The Returning Officer

Electoral unit.

Address.

No.

FORM X.

Form of Letter of Intimation.

[Rule 22(4).]

Railway Trade Union constituency.

..... *Electoral unit.*

Sir,

The persons whose names are printed on the ballot paper sent herewith have been nominated as candidates for the primary election to choose an electoral college. Should you desire to vote at this election, I have to request that you will—

(*a*) record your vote by placing a mark on the ballot paper opposite the name of the candidate for whom you wish to vote ;

(*b*) give not more than one vote ;

(*c*) sign the declaration on the back of the ballot paper ;

(*d*) place the ballot paper in the smaller envelope and close it up ; and

(*e*) enclose the smaller envelope in the cover addressed to me and return it to me by prepaid post or by messenger so as to reach me before 5 p.m. on the day of 19 .

2. The date appointed for the counting of votes is the day of 19 .

3. Covers returned by post on which the postage has not been prepaid will not be received by me.

4. Rule 78 of the Bengal Legislative Assembly Electoral (Conduct of Elections) Rules, 1936, provides that any ballot paper which is not duly marked, or on which more than one mark is placed against any candidate's name, or on which votes are given to more candidates than there are members to be elected, or on which a mark is placed in such a manner as to make it doubtful to which candidate it has been given, or the declaration on the back of which has not been duly signed, shall be invalid.

Address. *Returning Officer.*

Date.

FORM XI.

Form of Ballot Paper.

[Rule 36 (1).]

Serial No.....

Bengal Legislative Assembly Election, 19.....

Constituency
Unit .....

Polling Station .....

Distinctive letter or number of Polling Station.....

Union Board
Chaukidari Union .....

Municipality and number of Ward.....

Factory
Mine .....
Tea garden

Elector's No.....

Serial No.....

Bengal Legislative Assembly Election, 19.....

Constituency .....
Unit

Instructions.

General constituencies in which seats are reserved for members of the Scheduled Castes.

(1) The number of members for whom you may vote is .....

(2) You may cast all your votes in favour of one candidate, or distribute them as you please. If you cast all your votes for one candidate, place all ballot papers in the ballot box of that candidate. If you distribute your votes, place the ballot papers in the boxes of the candidates for whom you wish to vote.

Other constituencies.

One member is to be elected. Place the ballot paper in the ballot box of the candidate for whom you wish to vote.

Primary election for election of Scheduled Castes candidates or to choose an electoral college in the Railway Trade Union constituency where election will be by ballot boxes.

You have only one vote. Place the ballot paper in the ballot box of the candidate for whom you wish to vote.

FORM XII.

Form of Tendered Ballot Paper.

(Rule 37)

BENGAL LEGISLATIVE ASSEMBLY.

Polling Station .....
Constituency .....
Unit .....

.....

Name of elector.....

Number on electoral roll.....

The union board or chaukidari union included in the electoral area to which the elector belongs .....

The municipality and number of ward included in the electoral area to which the elector belongs .....

The factory, mine or tea garden included in the constituency to which the elector belongs .....

Name or names of candidate or candidates for whom this is tendered and the number of votes cast against each .....1.....
2.....
etc.

Date..... .... *Signature of the Presiding Officer.*

FORM XIII.

Tendered Votes List.

(Rules 37 and 63.)

Polling Station.....

Name of constituency with electoral unit, if any.	Name of elector.	Number in electoral roll.	Distinctive letter or number of the polling station	Signature or thumb impression of elector and his address.

Date..... *Signature of the Presiding Officer.*

FORM XIV.

List of challenged votes.

[Rule 38(1).]

Signature sheet No. .....

Number on electoral roll.	Name.	Signature of elector, if literate or thumb impression, if illiterate, and address.	Name of identifier, if any.	Order of Presiding Officer in each case.

Signature of the Presiding Officer.

Date. ....

FORM XV.

Application for a certificate entitling a presiding officer, polling officer or polling agent or public servant to vote at the polling station where he is authorised or appointed for duty.

[Rules 40 (2) and 64 (2).]

To

The Returning Officer,

.....Constituency.

The applicant having been authorised or appointed for duty as a presiding officer/polling officer/polling agent/public servant at.....at which he is not entitled to vote begs to apply for a certificate under rule 40 (64) of the Bengal Legislative Assembly Electoral (Conduct of Elections) Rules, 1936, and submits the following particulars :—

(1) Name of the applicant.....

(2) Name of the constituency/electoral unit in which the applicant is an elector.....
.....

(3) Number of the applicant in the electoral roll of the constituency/electoral unit.....

(4) Name of the union/name of municipality and number of ward included in the electoral area, or name of the factory, mine or tea garden, to which the applicant belongs in the constituency.....
.....

(5) Name of the polling station at which the applicant is entitled to vote.....

(6) Name of the constituency/electoral unit and the polling station at which the applicant is authorised or appointed for duty.....
.....

Signature of the applicant.

Dated.....

FORM XVI.

Certificate entitling a presiding officer, polling officer or polling agent or public servant to vote at the polling station where he is authorised or appointed for duty.

[Rules 40 (2) and 64 (2).]

A, B being duly registered as elector No.....in Ward No..... of.....Municipality/Union.....in police-station.. .....Constituency/electoral unit..... .....in the primary/general/bye election of the..... Constituency of the Bengal Legislative Assembly and being duly authorised/appointed for duty as presiding officer/polling officer/polling agent/public servant at polling station.....of..... Constituency/electoral unit is entitled to record his vote at polling station .....of.....Constituency/electoral unit and at no other during the said election.

*[A list of the candidates for election in the constituency/electoral unit in which the said.....is entitled to vote together with the symbol and the name of the symbol assigned to each such candidate is given below :—

Serial No.	Name of the candidate.	Symbol assigned to the candidate.	Name of the symbol assigned.]

Returning Officer,

Dated..... .....*Constituency/electoral unit.*

*This portion within square brackets is to be struck out if the polling station at which the person is authorised or appointed for duty is in the same constituency or electoral unit as the one in which he is entitled to vote.

FORM XVII.

Ballot Paper Account.

(Rule 43.)

Bengal Legislative Assembly.

..... **Constituency.**
Electoral unit.

..... **Polling Station.**

	Ordinary ballot papers.	Tendered ballot papers.
1. Number of ballot papers received by the presiding officer.		
2. Number of unused ballot papers returned ..		
3. Number of spoilt ballot papers		
4. Number of tendered ballot papers used ..		
5. Number of ballot papers dealt with under rule 41		
6. Number of ballot papers issued		

Signature of the Presiding Officer.

Date.....

FORM XVIII.

Form of Return of Election.

[Rules 50, 79, 87, 96 (2) (c), 107 (2) (c), 118 (2) (c).]

Bengal Legislative Assembly.

..... *Constituency.*
Electoral unit.

Name of candidate.	Number of valid votes recorded in favour of the candidate.
1	2
(1)	
(2)	
Etc.	
Etc.	

Total number of valid votes.....

Total number of invalid votes.....

*Total number of tendered votes.....

*The result of the verification referred to in rule 49/69/86 (1) of the Bengal Legislative Assembly Electoral (Conduct of Elections) Rules, 1936....

.....

I declare that (Name) (1) .....

(Address) .....

(2) .....

(Address) .....

Etc. .....

.....has/have been duly elected.

(Signature)
Returning Officer.

Dated the.....day of.....19 .

* Not to be filled up in the case of elections where the method of voting by postal ballot has been followed.

FORM XIX.

Form of Ballot Paper.

(Rule 62.)

Bengal Legislative Assembly.

Election for ..... European Constituency, 193 .

Anglo-Indian Constituency, 193 .

Counterfoil

Serial No.....

Constituency .....

Polling station.....

Distinctive letter or number of polling station .....

Number of elector on electoral roll.....

Outerfoil.

Front

Armstrong, Richard	
Duncan, Robert	
McInnes, Douglas	
Robertson, Ivan	
Sutcliffe, Christopher	
Webster, John	

Note.—The whole of the outerfoil of the ballot paper should be taken up by the cage containing the names of candidates and spaces for recording votes and the instructions to electors.

Instructions.

(1) The number of members for whom you may vote is.....

(2) Place a cross thus X or a mark against the name of the candidate/ each of the candidates for whom you wish to vote.

(3) In the case of the Anglo-Indian Constituency one seat is reserved for women ; therefore not more than three votes may be cast in favour of male candidates.

Back of outerfoil.

Serial No.

FORM XX.

Form of Ballot Paper.

[Rule 71 (*1*).]

Bengal Legislative Assembly.

Election for .....European Constituency, 193 .

Anglo-Indian Constituency, 193 .

Counterfoil No.	Armstrong, Richard	
Name of elector and number on the electoral roll	Duncan, Robert	
	McInnes, Douglas	
	Robertson, Ivan	
	Sutcliffe, Christopher	

Instructions.

1. Votes shall be recorded by placing a mark on the ballot paper opposite the name (or names) of the candidate (or candidates) for whom the elector wishes to vote and the declaration on the back of the form shall be signed by the elector.

2. Not more than one vote may be given to a candidate.

3. Votes may not be given to more candidates than there are members to be elected.

4. In the case of the Anglo-Indian Constituency, one seat is reserved for women ; therefore not more than three votes may be cast in favour of male candidates.

(Form of back of ballot paper.)

I hereby declare that I have not voted before at the present election in any other European / in the Anglo-Indian Constituency.

.....

Signature of elector.

Address.....

FORM XXI.

Legislative Assembly Election.

[Rules 71(*1*), 89(*1*), 99(*1*) and 110(*1*).]

Constituency.

Poll on

To

The Returning Officer,

Constituency.

No. (*Address.*)

FORM XXII.

Form of Letter of Intimation.

[Rule 71(*1*).]

Constituency.

SIR,

The persons whose names are printed on the ballot paper sent herewith have been nominated as candidates for the Legislative Assembly. Should you desire to vote at this election, I have to request that you will—

(*a*) record your vote by placing a mark on the ballot paper opposite the name (or names) of the candidate (or candidates) for whom you wish to vote ;

(*b*) give not more than one vote to a candidate ;

(*c*) sign the declaration on the back of the ballot paper ;

(*d*) place the ballot paper in the smaller envelope and close it up ; and

(*e*) enclose the smaller envelope in the cover addressed to me and return it to me by prepaid post or by messenger so as to reach me before 5 p.m. on the day of 19

2. The date appointed for the counting of votes is the day of 19 .

3. Covers returned by post on which the postage has not been prepaid will not be received by me.

4. Rule 78 of the Bengal Legislative Assembly Electoral (Conduct of Elections) Rules, 1936, provides that any ballot paper which is not duly marked, or on which more than one mark is placed against any candidate's name, or on which votes are given to more candidates than there are members to be elected, or on which a mark is placed in such a manner as to make it doubtful to which candidate it has been given, or the declaration on the back of which has not been duly signed, shall be invalid, and that in the Anglo-Indian Constituency in which a seat is reserved for women, a ballot paper shall also be invalid if the number of votes recorded thereon in favour of male candidates exceeds three.

Address.

Date. *Returning Officer.*

FORM XXIII.

Form of Ballot Paper.

[Rule 89(*1*).]

Bengal Legislative Assembly.

Election for.....University Constituency, 193 .

Counterfoil No.	Datta, Birendra	
Name of elector and number on the electoral roll.	Datta, Sailendra Nath	
	Ghosh, Sasanka	
	Ghosh Tarapada	
	Sen, Kisori Mohan	

Instructions.

1. The declaration on the back of the form shall be made in the presence of an attesting officer.

2. The attesting officer shall attest the signature of an elector, but not his vote, which should not be recorded in the presence of the attesting officer.

3. Votes shall be recorded by placing a mark on the ballot paper opposite the name of the candidate for whom the elector wishes to vote.

4. Ballot papers may be attested by a Magistrate, Fellow of the University which constitutes the constituency, a member of the Dacca University Court or Principal of a College affiliated to the University which constitutes the constituency.

5. Not more than one vote may be given to a candidate.

6. Votes may not be given to more than one candidate.

(Form of back of ballot paper.)

I hereby declare that I am the person whose name appears as Elector No. .....on the electoral roll for the————————University Constituency.

Signature of elector.

Address.....

Signed in my presence by .....who is personally known to me [or who has been identified to my satisfaction by—

Name .....

Address .....]

Signature .....

Designation .....

FORM XXIV.

Form of Letter of Intimation.

[Rule 89(*1*).]

SIR, *Constituency.*

The persons whose names are printed on the ballot paper sent herewith have been nominated as candidates for the Legislative Assembly. Should you desire to vote at this election, I have to request that you will—

(*a*) record your vote by placing a mark on the ballot paper opposite the name of the candidate for whom you wish to vote;

(*b*) give not more than one vote to a candidate;

(*c*) sign the declaration on the back of the ballot paper in the presence of an attesting officer, who shall attest only your signature but not your vote, which you should not record in the presence of the attesting officer;

(*d*) place the ballot paper in the smaller envelope and close it up; and

(*e*) enclose the smaller envelope in the cover addressed to me and return it to me by prepaid post or by messenger so as to reach me before 5 p.m. on the day of 19 .

2. The date appointed for the counting of votes is the day of 19 .

3. Covers returned by post on which the postage has not been prepaid will not be received by me.

4. Ballot papers may be attested by a Magistrate, Fellow of the University which constitutes the constituency, a member of the Dacca University Court, or Principal of a College affiliated to the University which constitutes the constituency.

5. Rule 94 of the Bengal Legislative Assembly Electoral (Conduct of Elections) Rules, 1936, provides that any ballot paper which is not duly marked, or on which more than one mark is placed against any candidate's name, or on which votes are given to more candidates than one, or on which a mark is placed in such a manner as to make it doubtful to which candidate it has been given, or on which the signature of the elector is not duly attested, shall be invalid.

6. Your number on the electoral roll of.....constituency is..... You should insert this number in the declaration on the back of the ballot paper.

Returning Officer.

Address.

Date.

FORM XXV.

Form of Letter of Intimation.

[Rule 99(*1*).]

Constituency.

SIR,

The persons whose names are printed on the ballot paper sent herewith have been nominated as candidates for the Legislative Assembly. Should you desire to vote at this election, I have to request that you will—

(*a*) present the ballot paper for attestation to an attesting officer in his office not later than 5 p.m. on the day of 19 ;

(*b*) sign the declaration on the back of the ballot paper in the presence of the attesting officer who shall attest only your signature but not your vote, which you should not record in the presence of the attesting officer;

(*c*) then proceed to a place set apart for the purpose by the attesting officer and there record your vote (or votes) by placing a mark (or marks) on the ballot paper opposite the name (or names) of the candidate (or candidates) for whom you wish to vote;

(*d*) not give more votes than there are seats to be filled and you may give all those votes to one candidate or may distribute them between such candidates as you think fit;

(*e*) place the ballot paper in the envelope sent with this letter and closing the same deliver it to the attesting officer.

2. In the case of a firm, corporation or Hindu joint family, the votes shall be recorded and the declaration on the ballot paper shall be signed by one only of the nominees entered in the electoral roll, of such firm, corporation or Hindu joint family.

3. The date appointed for the counting of votes is the day of 19 .

4. Rule 105 of the Bengal Legislative Assembly Electoral (Conduct of Elections) Rules, 1936, provides that a ballot paper that is not duly attested, or marked, or on which more marks are placed against any candidate's name than there are members to be elected, or on which votes are given to more candidates than there are members to be elected, or on which a mark is placed in such a manner as to render it doubtful to which candidate it has been given, shall be invalid.

5. Your number on the electoral roll of.....constituency is..... You should insert this number in the declaration on the back of the ballot paper.

Returning Officer.

Address.

Date.

FORM XXVI.

Form of Letter of Intimation.

[Rules 99(*1*) and 110(*1*).]

Constituency.

SIR,

The persons whose names are printed on the ballot paper sent herewith have been nominated as candidates for the Legislative Assembly. Should you desire to vote at this election, I have to request that you will—

(*a*) present the ballot paper for attestation to an attesting officer in his office not later than 5 p.m. on the day of 19 ;

(*b*) sign the declaration on the back of the ballot paper in the presence of the attesting officer who shall attest only your signature but not your vote, which you should not record in the presence of the attesting officer;

(*c*) then proceed to a place set apart for the purpose by the attesting officer and there record your vote by placing a mark on the ballot paper opposite the name of the candidate for whom you wish to vote;

(*d*) give not more than one vote to a candidate; and

(*e*) place the ballot paper in the envelope sent with this letter and closing the same deliver it to the attesting officer.

2. The date appointed for the counting of votes is the day of 19 .

3. Rule 105/116 of the Bengal Legislative Assembly Electoral (Conduct of Elections) Rules, 1936, provides that a ballot paper that is not duly attested or marked, or on which more marks are placed against any candidate's name than there are members to be elected, or on which votes are given to more candidates than there are members to be elected, or on which a mark is placed in such a manner as to render it doubtful to which candidate it has been given, shall be invalid.

4. Your number on the electoral roll/list of members of the electoral college of .....constituency is..... ..... You should insert this number in the declaration on the back of the ballot paper.

Returning Officer.

Address.

Date.

FORM XXVII.

Commerce and Industry Constituency.

[Rule 99(*3*).]

Election for.....Constituency, 193

Counterfoil No.....

Name of elector..		
Number on electoral roll.....		

Instructions.

1. Ballot papers shall be presented for attestation to an Attesting Officer in his office not later than 5 p.m. on the .....day of..... 193 .

The following have been appointed Attesting Officers:—

The Chief Presidency Magistrate, Calcutta; other stipendiary Presidency Magistrates, Calcutta; the Municipal Magistrates, Calcutta; the Collector of Calcutta; the Probate Deputy Collector, Calcutta; Judges of the Presidency Small Causes Court, Calcutta; the Police Magistrate, Sealdah; other stipendiary Magistrates and Judges stationed at headquarters of Howrah and the 24-Parganas districts.

The Attesting Officer shall attest the signature only of the elector, but not his vote, which should not be recorded in the presence of the Attesting Officer.

2. You have as many votes as there are seats to be filled and you may give all your votes to one candidate or may distribute them between the candidates in such manner as you think fit. The votes shall be recorded in the following manner:—

(*i*) where one member is to be elected, you should place one mark opposite the name of the candidate for whom you desire to vote;

(*ii*) where more members than one are to be elected you may place all the marks (the number of marks not exceeding the number of members to be elected) opposite the name of any one candidate or place the marks opposite the names of candidates distributing the marks amongst the candidates in such manner as you think fit.

3. Votes may not be given to more candidates than there are members to be elected.

Decision of Returning Officer.

Serial No.

(Form of back of ballot paper.)

I hereby declare that I am the person whose name appears as elector No..... (as nominee of . .) on the electoral roll for the..... .....constituency and that I have not voted in any other Commerce and Industry constituency.

Signature of elector.

.....

(Fold on this line.)

Signed in my presence at my office by the elector, who is personally known to me [or who has been identified to my satisfaction by—

Name. . .....

Address.....]

Attesting Officer.

Designation.

FORM XXVIII.

[Rule 99(*3*).]

Election for.....Landholders' Constituency, 193 .

Counterfoil No.

Name of elector.....		
Number on electoral roll		

Instructions.

1. Ballot papers shall be presented for attestation to an Attesting Officer in his office not later than 5 p.m. on the.....day of.....193.....

The following have been appointed Attesting Officers:—

All District Magistrates, all Judges, all Subordinate Judges, all Munsifs, the Chief Presidency Magistrate, Calcutta, other stipendiary Presidency Magistrates, the Municipal Magistrates, Calcutta, the Collector of Calcutta, all Subdivisional Magistrates, all Assistant Inspectresses of Schools, the Deputy Commissioners of Darjeeling, Jalpaiguri and the Chittagong Hill Tracts, and the Political Agent, Tripura State.

The Attesting Officer shall attest the signature only of the elector, but not his vote, which should not be recorded in the presence of the Attesting Officer.

2. Place a mark opposite the name of the candidate for whom you wish to vote.

3. Not more than one vote may be given to any candidate.

4. Votes may not be given to more than one candidate.

Decision of Returning Officer.

Serial No.

(Form of back of ballot paper.)

I hereby declare that I am the person whose name appears as elector No.....on the electoral roll of Landholders for the..... constituency and that I have not voted in any other Landholders' constituency.

Elector.

....

(Fold on this line.)

Signed in my presence at my office by the elector, who is personally known to me [or who has been identified to my satisfaction by—

Name.....

Address.....]

Attesting Officer.

Designation.

FORM XXIX.

(Rules 104 and 115.)

The following is a complete list of the electors or members of the electoral college whose ballot papers have been attested by me :—

Name of constituency.	Serial number on electoral roll or in the list of members of the electoral college.	Name of elector or member of the electoral college and where the elector is a nominee of a firm, corporation or Hindu joint family its name also.
1	2	3

Attesting Officer.

Designation.

Dated the.....193....

FORM XXX.

[Rule 110(1).]

Election for.....Trade Union Constituency, 193 .

Counterfoil No.

Name of elector or member of the electoral college.....		
Number on the electoral roll or in the list of members forming the electoral college.....		

Instructions.

1. Ballot papers shall be presented for attestation to an Attesting Officer in his office not later than 5 p.m. on the..... .....day of .....193....

The following have been appointed Attesting Officers :—

All District Magistrates, the Chief Presidency Magistrate, Calcutta, other stipendiary Presidency Magistrates, the Municipal Magistrates, Calcutta, the Collector of Calcutta, all Subdivisional Magistrates, the Deputy Commissioners of Darjeeling, Jalpaiguri and the Chittagong Hill Tracts, and the Political Agent, Tripura State.

The Attesting Officer shall attest the signature only of the elector or member of the electoral college, but not his vote, which should not be recorded in the presence of the Attesting Officer.

2. Place a mark opposite the name of the candidate for whom you wish to vote.

3. Not more than one vote may be given to any candidate

4. Votes may not be given to more than one candidate.

Decision of Returning Officer.

Serial No.

(Form of back of ballot paper.)

I hereby declare that I am the person whose name appears as elector No... /a member of the electoral college/on the electoral roll/in the list of members of the electoral college/for the.....constituency and I have not voted in any other trade union or in any factory or colliery labour constituency.

Elector or member of the electoral college.

....

(Fold on this line.)

Signed in my presence at my office by the elector (or member of the electoral college), who is personally known to me [or who has been identified to my satisfaction by—

Name.....

Address.....]

Attesting Officer.

Designation.

SCHEDULE I.

Nomination Paper.

[Rule 4(*4*).]

Name of the $\frac{\text{constituency}}{\text{electoral unit}}$ for which the candidate is nominated .. .. _____

Name of candidate .. .. _____

$\frac{\text{Father's}}{\text{‡Husband's}}$ name .. .. .. _____

Age .. .. .. _____

Sex .. .. .. _____

Address .. .. .. _____

*Denomination (state whether Muhammadan, Indian Christian, European, Anglo-Indian or belongs to General Community. State caste if belonging to a Scheduled Caste) .. .. _____

(*a*) $\frac{\text{Constituency}}{\text{electoral unit}}$ on the electoral roll of which the name of the candidate is included .. .. _____

(*a*) †Number of the candidate in the electoral roll of the $\frac{\text{constituency}}{\text{electoral unit}}$ in which his name is included .. .. .. _____

(*a*) ††Number of the candidate in the list of members forming the electoral college in the Railway Trade Union constituency .. .. _____

Name of proposer .. .. .. _____

†Number of the proposer in the electoral roll of the $\frac{\text{constituency}}{\text{electoral unit}}$ .. .. .. _____

Signature of the proposer .. .. .. _____

Name of the seconder .. .. .. _____

†Number of the seconder in the electoral roll of the $\frac{\text{constituency}}{\text{electoral unit}}$ .. .. .. _____

Signature of the seconder .. .. .. _____

Declaration by candidate.

I hereby declare that I agree to this nomination.

Date..... *Signature of candidate.*

(*N.B.*—This nomination paper will not be valid unless it is delivered to the Returning Officer, or other person authorised to receive it, at his office before 3 p.m. on..... 19....).

‡To be filled in only if the candidate is a married woman or a widow.

*Not to be filled in in the case of a special constituency.

†Where the electoral roll is subdivided and separate serial numbers are assigned to the electors entered in each subdivision, a description of the subdivision in which the name of the person concerned is entered must also be given here.

(*a*) This entry need not be filled where the candidate for a labour constituency is a member, honorary member, or official of a trade union, and the candidate is not entitled to vote in the choice of a member to fill a labour seat.

††To be filled only in the case of a final election in the Railway Trade Union constituency, where necessary.

(To be filled in by the Returning Officer or other authorised person).

Certificate of delivery.

Serial No.

This nomination paper was delivered to me at my office, at (date and hour.....) by the candidate/proposer/seconder.

Returning Officer or other authorised person.

Certificate of Scrutiny.

I have scrutinised the eligiblity of the candidate, the proposer and seconder, and find that they are respectively qualified to stand for election, to propose and to second the nomination.

**The symbol assigned to the candidate is.....

Returning Officer or other authorised person.

***I hereby declare that I have appointed (name)..... (address).....to be my election agent.

(*Signature.*)

†††I do hereby declare that I have selected..... as the symbol for my election.

(*Signature.*)

Certificate in the case of candidate in trade union, factory or colliery labour constituency. (*b*).

I hereby declare that the candidate is a member, honorary member or official of..... trade union in Bengal (*c*) [and is not in arrear with his subscription thereto].

Common seal of Union. Signature of President, Chairman or Secretary of.....Union.

Signed in my presence by.....who is personally known to me [or who has been identified to my satisfaction by

Name.....

Address.....]

Signature of Magistrate.
Full designation.

Declaration by candidate in the case of tea garden labour constituency.

I hereby declare that I am a member of.....tribe/caste.

Signature of candidate.

**This should be struck out in the case of a candidate for election in a European, Anglo-Indian, commerce and industry, trade union (except primary election in the Railway Trade Union Constituency where the method of voting by ballot boxes shall be followed), university, or landholder's constituency.

***A candidate may appoint himself as his election agent.

†††A candidate for election in a European, Anglo-Indian, commerce and industry, trade union (except primary election in the Railway Trade Union Constituency where the method of voting by ballot boxes shall be followed), university or landholders' constituency should not fill in this declaration form.

(*b*) This certificate is necessary in the case where the candidate is a member, honorary member or official of a trade union and is not entitled to vote in the choice of a member to fill any labour seat.

(*c*) Strike out the portion within square brackets in the case where the candidate is an honorary member or official of a trade union.

SCHEDULE II.

List of Symbols.

[Rule 4(7)].

(1) Boat.
(2) Cart.
(3) Flower (Marigold).
(4) Hut.
(5) Hurricane lamp.
(6) Palki.
(7) Plough.
(8) Mango tree.
(9) Scales.
(10) Umbrella.
(11) Fishing rod.
(12) Human hand.
(13) Bicycle.
(14) Lock and key.
(15) Hookah.
(16) Kodali.
(17) Date-palm.
(18) Kalsi.
(19) Axe.
(20) Dhenki.

SCHEDULE III.

Custody and preservation of election papers.

(Rule 124.)

Description of the election paper.	Custody.	Period for which to be kept.
1. Nomination papers of candidates. 2. Withdrawals from candidature. 3. Appointment letters of agents of candidates; and revocations of the appointments of agents. 4. Lists of candidates nominated. 5. Lists of ballot papers attested.	(*a*) In a Calcutta constituency, the Calcutta and Suburbs (European) constituency, the Anglo-Indian constituency, and the Calcutta-*cum*-Presidency Division (Indian Christian) constituency—in the office of the Commissioner of the Presidency Division. (*b*) In the North-Bengal Municipal (General) constituency—in the office of the Commissioner of the Rajshahi Division. (*c*) In the East-Bengal Municipal (General) constituency—in the office of the Commissioner of the Dacca Division. (*d*) In any other territorial constituency—in the office of the Commissioner of the Division in which the election has been held. (*e*) In landholders', Labour, University and Commerce and Industry constituencies—in the office of the Commissioner of the Presidency Division.	Until the termination of the next general election for the constituencies.
6. Orders by Returning Officers regarding the division of constituencies into polling areas and appointments of polling stations for such areas under rule 24.	Ditto ..	

No. 7311A.R.—5th September 1936.—In exercise of the powers conferred by paragraph 20 of the Fifth Schedule to the Government of India Act, 1935, read with Paragraph 23 of Part I of the Government of India (Provincial Legislative Councils) Order, 1936, and of all other powers enabling him in that behalf, the Governor of Bengal in Council is hereby pleased to make the following rules for the conduct of elections to the Bengal Legislative Council :—

The Bengal Legislative Council Electoral (Conduct of Elections) Rules, 1936.

Preliminary.

Short title.

1. These rules may be called the Bengal Legislative Council Electoral (Conduct of Elections) Rules, 1936.

Definitions.

2. In these rules, unless there is anything repugnant in the subject or context,—

(*a*) "an election agent" means the person appointed under these rules by a candidate as his agent for an election ;

(*b*) "Attesting Officer" means such officer as the Governor may, by notification in the Gazette, appoint to perform all or any of the duties of the Attesting Officer under these rules, and includes any officer deputed for the time being to perform his duties by the Attesting Officer, by an order in writing, of which a copy shall be sent to the Returning Officer ;

(*c*) "Gazette" means the *Calcutta Gazette* ;

(*d*) "the Act" means the Government of India Act, 1935 ;

(*e*) the expression "Returning Officer" has, except in Part VI of these rules, the same meaning as the meaning assigned to the said expression in the Bengal Legislative Council Electoral (Preparation, Revision and Publication of Electoral Rolls) Rules, 1936, and includes any person when performing any duty or function which such person is authorised to perform under sub-rule (1) of rule 4 of the said rules ; 26 Geo. V, C. 2.

(*f*) "the Order" means the Government of India (Provincial Legislative Councils) Order, 1936.

Part I.—Eligibility of Rulers and subjects of Indian States to be members.

Eligibility of Rulers and subjects of Indian States for membership.

3. At the first elections held for the purpose of constituting the Legislative Council of the Province or at any bye-election held, before the elections held in the third year thereafter to fill the seats of members retiring on the expiration of their terms of office, for the purpose of filling any casual vacancy in the Council so constituted, a Ruler of an Indian State and a subject thereof, shall be deemed to be qualified to be chosen to fill a seat for the purpose of clause (*a*) of paragraph 1 of the Fifth Schedule to the Act.

Part II.—Nominations and general procedure at elections.

Nomination of candidates.

4. (1) Any person may be nominated as a candidate for election to fill a seat in any territorial constituency if he is qualified to be chosen to fill that seat under the Act or any Order or rule made thereunder or an Act of the Provincial Legislature.

(2) The Governor shall, in his discretion, under sub-paragraph (1) of paragraph 17 of Part I of the Order, fix for each territorial constituency :—

(*a*) a date, not later than the fourteenth day after the date of the notification calling upon the constituency to elect a member, on or before which nominations are to be made ;

(*b*) a further date, not later than the seventh day after the first mentioned date, for the scrutiny of nominations ;

(*c*) a further date, not later than the day succeeding the date fixed for the scrutiny of nominations, on or before which candidatures may be withdrawn ; and

(*d*) a further date or dates on which a poll shall, if necessary, be taken ;

and the dates so fixed shall be published by notification in the Gazette by the Governor exercising his individual judgment.

(3) On the issue of a notification under sub-rule (2) it shall be the duty of the Returning Officer to give public notice of the intended election in form I annexed to these rules in such language or languages as he thinks fit. The said notice shall be published in such manner and in such places within the constituency as the Returning Officer considers necessary.

(4) On or before the date fixed under clause (*a*) of sub-rule (2), each candidate shall, either in person or by his proposer or seconder, between the hours of eleven o'clock in the forenoon and three o'clock in the afternoon, deliver to the Returning Officer or to such other person as is authorised in this behalf under rule 4 of the Bengal Legislative Council Electoral (Preparation, Revision and Publication of Electoral Rolls) Rules, 1936, a nomination paper completed in the form specified in Schedule I and subscribed by the candidate himself as assenting to the nomination and by two persons referred to in sub-rule (5) as proposer and seconder.

(5) Any person whose name is included in the electoral roll of the constituency and who is not subject to any disabilities for his name being so included under the Act or any Order or rule made thereunder or an Act of the Provincial Legislature, may subscribe, as proposer or seconder, as many nomination papers as there are vacancies to be filled but no more.

(6) Every nomination paper delivered under sub-rule (4) shall be accompanied by a declaration in writing subscribed by the candidate that the candidate has appointed or does thereby appoint as his election agent for the election either himself or some one other person who is not disqualified under the Act or any Order or rule made thereunder or an Act of the Provincial Legislature for the appointment and who shall be named in the declaration ; and no candidate shall be deemed to be duly nominated unless such declaration is delivered along with the nomination paper.

(7) Any nomination paper which is not received before three o'clock in the afternoon on the date fixed under clause (*a*) of sub-rule (2) shall be rejected.

(8) On the presentation of a nomination paper, the Returning Officer may require the person presenting the same to produce copies of the electoral rolls in which the names of the candidate and his proposer and seconder are included or of the necessary entries in such rolls and shall satisfy himself that the names and numbers on the electoral roll of the candidate and his proposer and seconder as entered in the nomination paper are the same as those entered in the electoral roll. Where necessary he shall direct that the former be amended so as to be in accordance with the latter.

It shall be also competent for the Returning Officer to alter or amend any entry in the nomination paper presented to him with a view to ensuring accurate and adequate publication under sub-rule (9) of names of candidates and of persons who have subscribed the nomination paper as proposer and seconder.

(9) The Returning Officer or other person authorised shall, on receiving a nomination paper under sub-rule (4), inform the person or persons delivering the same of the date, time and place fixed for the scrutiny of nominations, and shall enter in the nomination paper its serial number and shall sign thereon a certificate stating the date on which and the hour at which the nomination paper has been delivered to him : and shall, as soon as may be thereafter, cause to be affixed in some conspicuous place in his office a notice of the nomination containing descriptions, similar to those contained in the nomination paper, both of the candidate and of the persons who have subscribed the nomination paper as proposer and seconder.

(10) Any candidate may withdraw his candidature by notice in form II annexed to these rules subscribed by him and assented to by the proposer and seconder and delivered to the Returning Officer or other person authorised either by such candidate in person or by his proposer or seconder before three o'clock in the afternoon on the date fixed under clause (*c*) of sub-rule (2), and a candidate who has withdrawn his candidature shall not be allowed to cancel the withdrawal or to be renominated as a candidate for the same election :

Provided that if the last day for the delivery of notice of withdrawal of candidature under this sub-rule is a public holiday within the meaning of section 25 of the Negotiable Instruments Act, 1881, or has been notified by the Governor as a day to be observed as a holiday in Government offices, the notice of withdrawal of candidature shall be considered as having been delivered in due time if it is delivered on the next succeeding day which is neither such a public holiday nor a day so notified. XXVI of 1881.

(11) The Returning Officer or other person authorised shall, on receiving a notice of withdrawal under sub rule (10), as soon as may be, cause a notice of the withdrawal to be affixed in some conspicuous place in his office.

5. (1) At the time of delivery of a nomination paper under sub-rule (4) of rule 4, each candidate shall enclose with the nomination paper a Government treasury receipt (chalan) showing that a deposit of five hundred rupees has been made by him in the treasury : and no candidate shall be deemed to be duly nominated unless such deposit has been made and treasury receipt has been enclosed with the nomination paper. Deposit on nomination.

(2) If a candidate by whom or on whose behalf the deposit referred to in sub-rule (1) has been made withdraws his candidature in the manner and within the time specified in sub-rule (10) of rule 4, or if the nomination of any such candidate is refused, the deposit shall be returned to the person by whom it was made ; and, if any candidate dies before the commencement of the poll, any such deposit, if made by him, shall be returned to his legal representative or, if not made by the candidate, shall be returned to the person by whom it was made.

(3) If a candidate by whom or on whose behalf the deposit referred to in sub-rule (1) has been made is not elected and the number of votes polled by him does not exceed one-eighth of the total number of votes polled or, in the case of a constituency returning more than two members, one-eighth of the total number of votes polled divided by the total number of members to be elected, the deposit shall be forfeited to the Government.

(4) For the purpose of sub-rule (3), the number of votes polled shall be deemed to be the number of ballot papers, other than rejected ballot papers, counted.

(5) The deposit made by or on behalf of a candidate, whether such candidate is elected or not, shall, if it is not forfeited under sub-rule (3), be returned to such candidate or to the person who has made the deposit on his behalf, as the case may be, after the publication of the result of the election in the Gazette :

Provided that, if a candidate is duly nominated at an election in more than one territorial constituency, or at an election in a territorial constituency and an election by the members of the Bengal Legislative Assembly to fill seats in the Bengal Legislative Council, not more than one of the deposits made by him or on his behalf shall be returned, and the remainder shall be forfeited to the Government.

Scrutiny of nominations.

6. (1) On the date fixed by the Governor for the scrutiny of nominations under sub-rule (2) of rule 4, the candidates, their election agents, one proposer and one seconder of each candidate, and one other person duly authorised in writing by each candidate, but no other person, may attend at such time and place as the Returning Officer may appoint, and the Returning Officer shall give them all reasonable facilities for examining the nomination papers of all candidates which have been delivered within the time and in the manner laid down in rule 4.

(2) (*a*) The Returning Officer shall then examine the nomination papers and shall decide all objections which may be made to any nomination, and may, either on such objection or on his own motion, after such summary inquiry, if any, as he thinks necessary, refuse any nomination on any of the following grounds :—

(*i*) that the candidate is not qualified to be chosen to fill the seat under the Act or under an Act of the Provincial Legislature or under any Order or rule made under the Act ; or

(*ii*) that the candidate is disqualified for being chosen to fill the seat under section 69 or any other provision of the Act or under an Act of the Provincial Legislature or under any Order or rule made under the Act ; or

(*iii*) that a proposer or seconder is disqualified from subscribing a nomination paper under sub-rule (5) of rule 4 ; or

(*iv*) that there has been any failure to comply with any of the provisions of rule 4 or rule 5 ; or

(*v*) that the candidate is not identical with the person whose number or name on the electoral roll is given in the nomination paper as the number or name of such candidate ; or

(*vi*) that any proposer or seconder is not identical with the person whose number or name on the electoral roll is given in the nomination paper as the number or name of such proposer or seconder ; or

(*vii*) that the signature of the candidate or any proposer or seconder is not genuine or has been obtained by fraud.

(*b*) For the purposes of this rule :—

(*i*) the production of any certified copy of an entry made in the electoral roll of any constituency shall be conclusive evidence of the right of any elector named in that entry to stand for election or to subscribe a nomination paper, as the case may be, unless it is proved that the candidate is disqualified under the Act or any Order or rule made thereunder or an Act of the Provincial Legislature or that the proposer or seconder, as the case may be, is disqualified under sub-rule (5) of rule 4 ;

(*ii*) where a person has subscribed whether as proposer or seconder a larger number of nomination papers than there are vacancies to be filled, those of the papers so subscribed which have been first received, up to the number of vacancies to be filled, shall be deemed to be valid.

(*c*) Nothing contained in sub-clause (*iii*), sub-clause (*iv*), sub-clause (*v*), sub-clause (*vi*) or sub-clause (*vii*) of clause (*a*) shall be deemed to authorise the refusal of the nomination of any candidate on the ground of any irregularity in respect of a nomination paper, if the candidate has been duly nominated by means of another nomination paper in respect of which no irregularity has been committed

(*d*) The Returning Officer shall not refuse any nomination paper on the ground of a slight technical defect such as the wrong spelling of a name

(3) (*a*) The Returning Officer shall endorse on each nomination paper his decision accepting or rejecting the same and, if the nomination paper is rejected, shall record in writing a brief statement of his reasons for such rejection.

(*b*) The scrutiny shall be completed on the day fixed in this behalf under clause (*b*) of sub-rule (2) of rule 4 and no adjournment of the proceedings shall be allowed.

(4) On completion of the scrutiny of nominations and after expiry of the period within which candidatures may be withdrawn, under sub-rule (10) of rule 4, the Returning Officer shall forthwith prepare a list of valid nominations and cause it to be affixed in some conspicuous place in his office.

Death of candidate before poll.

7. If a candidate who has been duly nominated under these rules dies after the date fixed for the scrutiny of nominations and before the commencement of the poll, the Returning Officer or other authorised person referred to in sub-rule (4) of rule 4 shall, upon

being satisfied of the fact of the death of the candidate, countermand the poll and report the fact to the Governor, and all proceedings with reference to the election shall be commenced anew in all respects as if for a new election :

Provided that no fresh nomination shall be necessary in the case of a candidate whose nomination had been valid at the time of the countermanding of the poll.

Procedure at election.

8. (1) If the number of candidates who are duly nominated and who have not withdrawn their candidature in the manner and within the time specified in sub-rule (10) of rule 4 exceeds that of the seats to be filled, the Returning Officer shall forthwith publish in the Gazette, and in such other manner as the Governor may direct, and in such places in the constituency as the Returning Officer may consider necessary, a list in form III annexed to these rules containing the names in alphabetical order and addresses of the candidates as given in the nomination papers, and a poll shall be taken.

(2) If the number of such candidates is equal to the number of seats to be filled, the Returning Officer shall declare all such candidates to be duly elected to fill those seats.

(3) If the number of such candidates is less than the number of seats to be filled, the Returning Officer shall declare all such candidates, if any, to be elected to fill the seats, and the Governor exercising his individual judgment shall, by a notification in the Gazette, call upon the constituency to elect a person or persons, as the case may be, within such time as may be fixed by him in his discretion and specified in the notification :

Provided that where the constituency, having already been called upon under this sub-rule, has failed to elect a person or the requisite number of persons, as the case may be, to fill the vacancy or vacancies, the Governor shall not be bound to call again upon the constituency to elect a person or persons until such time, if any, as he thinks fit.

(4) At elections in every territorial constituency where a poll is taken votes shall be given by ballot in the manner provided in these rules and no votes shall be received by proxy.

(5) Votes shall be counted by, or under the supervision of, the Returning Officer, and each candidate, and either his election agent, or one representative of each candidate authorised in writing by the candidate shall have a right to be present at the time of counting.

(6) When the counting of the votes has been completed, the Returning Officer shall forthwith declare the candidate or candidates elected.

(7) The Returning Officer shall without delay report the result of the election to the Secretary to the Bengal Legislative Council or to such officer as the Governor may direct, and the declaration containing the name or names of the candidate or candidates elected shall be published in the Gazette.

Part III. Voting.

Hours of commencement and close of the poll.

9. (1) The Governor shall fix the hour at which the poll shall commence and the hour at which it shall close on the date or dates fixed for the poll under clause (*d*) of sub-rule (2) of rule 4. The hours of polling shall ordinarily be uniform within each constituency but the Governor may in the case of any constituency specify different hours of polling

within different areas. The Governor exercising his individual judgment shall, by notification in the Gazette, publish the hours fixed for polling and the said hours shall be also published in such other manner as the Governor may direct.

(2) The Returning Officer may, either for the constituency as a whole or for a particular polling station of the constituency, for sufficient cause and with the previous consent of the Governor in his discretion, postpone the date fixed for the poll to a date to be fixed by the Governor in his discretion, or for sufficient cause and with the previous consent of the Governor extend the hour fixed under sub-rule (1) at which the poll shall close.

Appointments of presiding officers and polling officers for polling stations.

10. (1) The Returning Officer shall select for each constituency as many polling stations as he thinks necessary and shall publish, in such manner as the Governor may direct, a list showing the polling stations so selected, and the polling areas for which they have respectively been selected.

(2) The Returning Officer shall appoint a presiding officer for each polling station and such other person or persons (hereinafter referred to as polling officer or officers) to assist the presiding officer as he thinks necessary :

Provided that if a polling officer is absent from the polling station the presiding officer may appoint any person who is present at the polling station to be the polling officer during the absence of the former officer and inform the Returning Officer accordingly.

(3) A polling officer may, if so directed by the presiding officer, perform all or any of the duties assigned to a presiding officer under these rules.

(4) If the presiding officer, owing to illness or other unavoidable cause, is obliged to absent himself from the polling station, his duties shall be performed by such polling officer as has been previously authorised by the Returning Officer to perform such duties during any such absence.

Duties of presiding officers at polling stations.

11. (1) The presiding officer shall keep order at the polling station, shall see that the election is fairly conducted, shall regulate the number of electors to be admitted at one time, and shall exclude all other persons except—

(*a*) the polling officer or officers, the candidates, and one agent of each candidate (hereinafter referred to as the polling agent) appointed in writing by the candidate, and authorised in this behalf by the Returning Officer,

(*b*) the police officer or officers or other public servants on duty, and

(*c*) such other persons as the presiding officer may from time to time admit for the purpose of identifying electors.

(2) There shall be at least two police constables or chaukidars on duty either inside or outside the polling station, as the presiding officer shall direct, who shall under the orders of the presiding officer assist in expediting and regulating the passage of electors inside the polling station or maintain order either inside or outside the polling station :

Provided that no police officer or chaukidar shall be allowed to stay inside the polling station or part of a polling station which is set apart exclusively for the recording of the votes of women electors :

Provided further that if the presiding officer so directs there shall not be more than one police constable or chaukidar on duty under this

sub-rule at any polling station, where the votes in respect of the European constituency are recorded.

(3) The presiding officer shall close the polling station at the hour fixed for the close of the poll under sub-rule (1) or sub-rule (2) of rule 9, as the case may be, so as to prevent the admission thereto of any elector after that hour, provided that all electors present at the polling station before it is so closed shall be entitled to have their votes recorded.

(4) In emergencies such as a disturbance of the public peace or the intervention of floods the presiding officer for any polling station may, with the previous approval of the Returning Officer, close the poll at such station and announce an adjournment of the poll to a date to be notified later. The Returning Officer shall immediately report the circumstances to the Governor and the Governor shall in his discretion, as soon as may be, appoint a date on which the poll shall recommence at such polling station. The hour at which the poll shall commence and the hour at which the poll shall close on such date shall be fixed by the Governor. The date so appointed and the hours so fixed shall be notified in such manner as the Governor may direct.

Removal from the polling station for misconduct.

12. If any person misconducts himself at the polling station or fails to obey the lawful orders of the presiding officer or the polling officer performing the duties of the presiding officer, he may immediately, by order of the presiding officer, or such polling officer, be removed from the polling station by any police officer or by any other person authorised in writing by the presiding officer or such polling officer to remove him; and the person so removed shall not, unless with the permission of the presiding officer or such polling officer, be allowed again to enter the polling station during the day :

Provided that this power shall not be exercised so as to prevent any elector who is otherwise entitled to vote at any polling station from having an opportunity of voting at such station.

Arrangements for secrecy of voting and recording of votes of *purdanashin* electors.

13. Each polling station shall be furnished with such number of compartments, in which electors can record their votes screened from observation, as the Returning Officer thinks necessary.

As far as possible, separate compartments and separate entrances and exits shall be provided for women electors. Suitable arrangements shall be made for recording the votes of *purdanashin* female electors, as far as is practicable.

In constituencies other than the European constituency the Returning Officer may, however, at his discretion, if a sufficient number of women suitable and willing to act as presiding and polling officers are available, provide a separate polling station for taking the votes of the women electors for any polling area, and at such polling stations the work of the presiding and polling officers shall be done by women and if necessary also by such male persons as the Returning Officer thinks fit. If it is not possible to provide such a separate polling station one woman attendant may be provided as far as practicable to help women electors in recording their votes.

For the purpose of identification the husband or other near relative of a woman elector may accompany her to the polling station. Such person shall not, however, be permitted to go inside the polling compartment.

Articles to be provided at the polling station.

14. (1) The Returning Officer shall provide at each polling station materials sufficient for the purpose of enabling electors to mark the ballot papers, instruments for stamping the official mark on such papers, as many ballot boxes as may be necessary, and copies of the electoral roll or of such part thereof as contains the names of the electors entitled to vote at such station.

(2) The official mark shall be kept secret, and a period of not less than seven years shall intervene between the use of the same official mark at elections for the same constituency.

Ballot boxes to be locked up and sealed before commencement of poll.

15. Every ballot box shall be so constructed that the ballot papers can be introduced therein, but cannot be withdrawn therefrom, without the box being unlocked. The presiding officer at any polling station, immediately before the commencement of the poll, shall show each ballot-box to be used at the poll to such persons as may be present in such station so that they may see that it is empty, and he shall then lock it up, and place his seal upon it in such manner as to prevent its being opened without breaking such seal, and shall keep it so locked and sealed.

Section 14 of Act XXXIX of 1920 to be read and explained to persons present. XXXIX of 1920.

16. Before the polling station is open for the recording of votes, the presiding officer shall read to such persons as may be present the provisions of section 14 of the Indian Election Offences and Inquiries Act, 1920, and shall explain the substance thereof in the vernacular of the district.

Procedure before the recording of votes

17. (1) Immediately before a ballot paper is delivered to an elector, it shall be marked on the back with the official mark, and the number, name and description of the elector as stated in the electoral roll shall be called out, and the number of the elector shall be entered on the counterfoil, and a mark shall be placed in a copy of the electoral roll against the number of the elector, to denote that he has received a ballot paper, but no mark shall be made and nothing shall be written on the copy of the electoral roll to show the particular ballot paper which he has received. On the counterfoil shall be entered the name of the constituency and the name and the distinctive letter or number of the polling station.

(2) In deciding the right of a person to obtain a ballot paper for the purpose of voting at an election the presiding officer at any polling station may interpret an entry in the electoral roll so as to overlook merely clerical or printing errors but shall record his reasons for doing so and the interpretation he has adopted on the counterfoil of the ballot paper issued to such person.

Manner of recording votes.

18. The elector, on receiving the ballot paper, shall forthwith proceed into one of the compartments in the polling station, and there make a mark on the ballot paper against the name of the candidate or candidates for whom he intends to vote in accordance with the instructions set out on the ballot paper, and fold it up so as to conceal his vote, and, after showing to the presiding officer the official mark, shall put his ballot paper, so folded up, into the ballot-box. Every elector shall vote without undue delay and shall quit the polling station as soon as he has put his ballot paper into the ballot-box.

Recording of votes of illiterate and infirm electors.

19. If the elector, owing to illiteracy or infirmity, is unable to read the ballot paper or to make a mark thereon the presiding officer shall mark the vote in the ballot paper according to the direction of the elector. The elector shall then himself or with the assistance of the presiding officer put the ballot paper folded up into the ballot-box.

Elector to be questioned in case of doubts as to his identity.

20. At any time before a ballot paper is delivered to an elector, the presiding officer or polling officer may, of his own accord, if he has reason to doubt the identity of the elector or his right to vote at such station, and shall, if so required by a candidate or polling agent, put to the elector the following questions :—

(1) Are you the person enrolled as follows (reading the whole entry from the roll)? and,

(2) Have you already voted at the present election in this constituency?

(3) (And, at the first election held under the Act or at the election held in every third year under the Act), have you already voted at this election for the Legislative Council in any other territorial constituency?

and the elector shall not be supplied with a ballot paper if he refuses to answer any one of the questions and unless he answers the first question in the affirmative, the second question in the negative, and, at the first election or at the election held in every third year, the third question also in the negative.

Form of ballot paper.

21. The ballot paper shall be in form IV annexed to these rules, and shall contain the names of the duly nominated candidates arranged alphabetically in the order of their surnames. The ballot papers shall be serially numbered, the serial number being printed on the face of the counterfoil and on the back of the ballot paper.

Tendered votes.

22. If a person representing himself to be a particular elector named on the electoral roll applies for a ballot paper after another person has voted as such elector, the applicant shall, after duly answering such questions as the presiding officer may ask, be entitled to mark a ballot paper in the same manner as any other elector. Such ballot paper (hereinafter referred to as a "tendered ballot paper") shall be of a colour different from the other ballot papers, and, instead of being put into the ballot-box, shall be given to the presiding officer and endorsed by him with the name of the elector and his number on the electoral roll and the name of the electoral area to which the roll relates and shall be set aside in a separate packet and shall not be counted by the Returning Officer. The name of the elector and his number in the electoral roll and the name and the distinctive letter or the number of the polling station to which the roll relates shall be entered in a list in form V annexed to these rules, which shall bear the heading "Tendered votes list." The person tendering such ballot paper shall sign his name and address thereon or affix his thumb impression against the entry in that list.

Challenged votes.

23. (1) If any polling agent or any person whom the presiding officer considers suitable declares and undertakes to prove, or if the presiding officer for any reason is clearly of opinion, that any person by applying for a ballot paper has committed the offence of personation, the presiding officer shall require such person to enter in the list of challenged votes (which shall be in form VI annexed to these rules) his name and address, or if he is unable to write, to affix his thumb-impression thereto. If such person refuses to comply with such requisition he shall not be permitted to vote, but if he does so comply, he shall be allowed to vote, after he has been warned of the penalty for personation, provided that he answers the questions mentioned in rule 20 in the manner laid down therein.

(2) The presiding officer shall in every case, whether or not the person is allowed to vote, make a note of the circumstances in the list of challenged votes.

Supply of duplicate ballot paper when ballot paper is spoilt through inadvertence.

24. An elector who has inadvertently dealt with his ballot paper in such a manner that it cannot conveniently be used as a ballot paper may, on delivering it to the presiding officer and satisfying him of the inadvertence, obtain another ballot paper in place of the spoilt paper, and the latter shall, together with its counterfoil, be marked as cancelled by the presiding officer.

Grant of certificate to the presiding officer, polling officer or polling agent, or public servant for voting at the polling station at which he is on duty.

25. (1) A presiding officer, polling officer or polling agent or public servant, who being an elector of any territorial constituency is duly authorised or appointed for duty at a polling station at which he is not entitled to vote, may apply to the Returning Officer of the constituency for a certificate entitling him to vote at that polling station but at no other, provided that such polling station is within the constituency. On the production of such certificate he shall be allowed to vote at that polling station.

(2) Application for such certificate shall be made to the Returning Officer in form VII annexed to these rules on or before a date to be fixed in this behalf by the Governor in his discretion. The certificate shall be in form VIII annexed to these rules.

Manner of recording votes when certificate under rule 25 has been granted.

26. A person in possession of a certificate issued under rule 25 shall deliver the certificate to the presiding officer who shall thereupon issue to the person a ballot paper in the same manner as to any other elector, and the provisions contained in rules 17 and 18 shall apply. The certificate so delivered shall be filed by the presiding officer.

Delivery of ballot boxes, etc., to the Returning Officer after the close of the poll

27. The presiding officer of each polling station, as soon as practicable after the close of the poll, shall, in the presence of any candidates or polling agents who may be present, make up into separate parcels and seal with his own seal and the seal of such candidates or agents as may desire to affix their seal :—

(1) each ballot box in use at each station unopened but with the key attached and the slit in the lid sealed up ;

(2) the unused ballot papers ;

(3) the tendered ballot papers ;

(4) the spoilt ballot papers ;

(5) the marked copy of the electoral roll and any certificates filed by the presiding officer under rule 26 ;

(6) the counterfoils of the ballot papers ;

(7) the tendered votes list ; and

(8) the list of challenged votes ;

and shall deliver such packets or cause them to be delivered to the Returning Officer.

Statement by the presiding officer after the close of the poll.

28. The packets shall be accompanied by a statement in form IX made by the presiding officer, showing the number of ballot papers entrusted to him, and accounting for them under the heads of ballot papers issued, unused, spoilt, and tendered ballot papers, and ballot papers dealt with under rule 26.

Part IV.—Counting of votes.

Appointment of time, place and date for the counting of votes.

29. (1) The Governor shall in his discretion appoint a date (which shall be as soon as practicable after the close of the poll) for the counting of votes. The Returning Officer shall fix the place and time at which the votes shall be counted on the date so appointed, and shall give notice of such date, time and place, in writing to all candidates and election agents.

(2) If, at the time appointed, all the ballot boxes have not been received by the Returning Officer, or if from any other unavoidable cause he is unable to proceed with the counting of votes, he shall with the previous consent of the Governor in his discretion postpone the counting to some other time and date, appointed by the Governor in his discretion, and shall give notice thereof in writing to the candidates and election agents.

Persons who may be present at the counting of votes.

30. (1) No person shall be allowed to be present at the counting of the votes except the Returning Officer and such persons as he may appoint to assist him in counting the votes, and such other persons as have a right to be present under sub-rule (5) of rule 8.

(2) No person shall be appointed to assist in counting the votes, who has been employed by or on behalf of any candidate for any purpose whatsoever connected with the election.

Procedure to be followed at the counting of votes. XXXIX of 1920.

31. On the day and at the time appointed under rule 29 the Returning Officer shall, before he commences to count the votes, read the provisions of section 14 of the Indian Election Offences and Inquiries Act, 1920, to such persons as may be present, and shall then proceed as follows :—

(*a*) The ballot-box or boxes relating to each polling station shall be opened one after another, and the Returning Officer shall take out the papers therefrom, count them or cause them to be counted, and record the number thereof in a statement. Such statement shall not be shown to any candidate or his agent or representative duly authorised under sub-rule (5) of rule 8 until after the verification provided for in rule 34.

(*b*) After the number of ballot papers received in each box from each polling station has been recorded, the papers from all the boxes shall be mixed together. They shall then be sorted according to the candidates for whom they have been cast, and distributed in convenient bundles to persons appointed to assist in counting the votes.

(*c*) When the ballot papers have been so distributed but not before, the Returning Officer shall allow the candidates and their election agents, or representatives duly authorised under sub-rule (5) of rule 8, or either of them as may be present reasonable opportunity to inspect, without handling the ballot papers, and, shall on every ballot paper which is rejected endorse the word "rejected". If any candidate or his agent or representative present questions the correctness of the rejection, he shall also record on the ballot paper the grounds for the rejection. No candidate or agent or representative shall be allowed to see any serial number on the back of any ballot paper.

(*d*) The Returning Officer shall, as far as practicable, proceed continuously with the counting of the votes ; and shall, during any necessary intervals during which the counting has to be suspended, place

the ballot papers, packets and other documents relating to the election under his own seal and the seals of such candidates, or election agents as may desire to affix them, and shall cause adequate precautions to be taken for their custody.

Declaration of candidates elected.

32. When the counting of votes has been completed, the Returning Officer shall, subject to the provisions of paragraph 19 of Part I of the Order, forthwith declare the candidate or candidates, to whom the largest number of valid votes has been given, to be elected :

Provided that upon the application of any candidate, or his election agent, or his representative duly authorised under sub-rule (5) of rule 8 a recount shall be made before the Returning Officer makes the declaration, but the Returning Officer may reject any such application as may appear to him to be frivolous recording at the same time the grounds for such rejection.

Grounds for rejection of ballot paper.

33. (1) A ballot paper shall be rejected if—

(*a*) it has not on its back the official mark,

(*b*) the number of votes recorded thereon exceeds the number of vacancies to be filled,

(*c*) no vote is recorded thereon,

(*d*) it is void for uncertainty,

(*e*) it bears any mark by which the elector can be identified.

(2) The decision of the Returning Officer as to the validity of a ballot paper shall be final, subject only to reversal on an election petition claiming the seat.

Verification of statements submitted by the presiding officers.

34. The Returning Officer shall not open the sealed packets of the tendered votes, the marked copy of the electoral roll or the counterfoils of the ballot papers. He shall verify the statements submitted by the presiding officers under rule 28 by comparing them with the statement prepared under clause (*a*) of rule 31 and with the number of counted votes and rejected ballot papers, the unused ballot papers in his possession and the tendered votes list, shall then reclose and re-seal each packet which has been opened by him, and shall record on each packet a description of its contents and the date of the election to which it refers.

Return by the Returning Officer.

35. The Returning Officer shall then prepare and certify a return in form X annexed to these rules setting forth—

(1) the names of the candidates for whom valid votes have been given,

(2) the number of valid votes given for each candidate,

(3) the number of votes declared invalid,

(4) the number of tendered votes given,

(5) the result of the verification referred to in rule 34, and

(6) the names of the candidates elected,

and shall permit any candidate, or his election agent, or representative duly authorised under sub-rule (5) of rule 8 to take a copy of, or an extract from, such return.

Custody of the return and the papers relating to election.

36. (1) The Returning Officer shall, after reporting the result of the election under rule 8, forward the return to the Secretary to the Government of Bengal in the Reforms Department.

(2) With the exception of the papers relating to the election mentioned in rule 88, all papers relating to the election shall, in the case of the Calcutta (General) and Calcutta Suburbs (General) constituencies, the Calcutta and Suburbs (Muhammadan) constituency and the European constituency, be forwarded by the Returning Officer to the Commissioner of the Presidency Division and in the case of any other territorial constituency, be forwarded by the Returning Officer to the Commissioner of the Division in which the election has been held or where such Commissioner is himself the Returning Officer, shall be kept in his own custody.

(3) The papers relating to the election mentioned in rule 88 shall be disposed of by the Returning Officer in the manner set out in the said rule and shall be forwarded by him direct to the places and authorities mentioned therein or where such authority is himself the Returning Officer shall be kept in his own custody.

Inspection of papers relating to election and supply of copies of the return.

37. (1) While in the custody of the Commissioner of a division, the packets of ballot papers whether counted, rejected or tendered, and of the counterfoils thereof shall not be opened and their contents shall not be inspected or produced except under the order of a competent Court, or of Commissioners appointed to hold an inquiry in respect of an election, but all other papers relating to the election shall be open to public inspection subject to such conditions and to the payment of such fee, if any, as the Governor may direct.

(2) Copies of returns by the Returning Officer shall be furnished by the Secretary to the Government of Bengal in the Reforms Department on payment of a fee of Rs. 2 for each copy.

Ballot papers when to be destroyed.

38. The packets of ballot papers and of the counterfoils thereof referred to in sub-rule (1) of rule 37 shall be retained for a period of one year and shall thereafter be destroyed subject to any direction to the contrary made by the Governor, exercising his individual judgment or by a competent Court, or by Commissioners appointed to hold an inquiry in respect of an election.

Part V.—Special Rules for voting and the counting of votes applicable to the European Constituency.

Method of voting that may be adopted in the European constituency.

39. In the case of an election to fill a seat or seats in the European constituency, in electoral areas of such constituency in which the population of Europeans entitled to vote in such constituency is compact in the opinion of the Returning Officer, the method of voting shall be by ballot boxes, and in other electoral areas of the constituency the method of voting shall be by postal ballot.

Decision as to the method of voting to be followed and its publication.

40. (1) If the number of duly nominated candidates in the European constituency referred to in sub-rule (1) of rule 8 is greater than the number of seats to be filled in such constituency, the Returning Officer shall, before publishing the list mentioned in the said sub-rule, decide in accordance with rule 39 the method of voting that shall be followed in the different electoral areas thereof and such decision of the Returning Officer shall be final.

(2) The Returning Officer shall, before publication of the list mentioned in sub-rule (1) of rule 8, insert in it a note regarding the method of voting that shall be followed in the different electoral areas of the constituency.

Special rules as to voting and counting of votes in the European constituency.

41. At an election to fill a seat or seats in the European constituency where it has been decided under sub-rule (1) of rule 40 that the method of voting by ballot boxes shall be followed in certain electoral areas thereof and the method of voting by postal ballot shall be followed in the other electoral areas thereof, then with regard to voting in the electoral areas in which the method of voting by ballot boxes shall be followed, rules 9 to 28 inclusive shall apply, and with regard to voting in electoral areas in which the method of voting by postal ballot shall be followed, rules 9 to 28 inclusive shall not be applicable and the following rules 42 to 45 shall be substituted therefor and shall apply, and with regard to the counting of votes in the constituency rules 29 to 35 shall not be applicable and the following rules 46 to 52 shall be substituted therefor and shall apply.

Returning Officer to send ballot papers by post.

42. (1) On or before such date as may be fixed in this behalf by the Governor in his discretion, the Returning Officer shall send by registered post to each elector a ballot paper in form XI annexed to these rules and shall enter on the counterfoil of each ballot paper the name of the elector to whom the ballot paper is sent. With the ballot paper the Returning Officer shall also send a cover addressed to himself in form XII annexed to these rules, an envelope with the number of the ballot paper entered on its face and a letter in form XIII annexed to these rules. The Returning Officer shall have the number of the ballot paper entered at the left-hand bottom corner of the cover in form XII. The ballot paper together with the cover, envelope and letter shall be sent to the address of the elector as shown in the electoral roll.

(2) At the time of sending a ballot paper to a person under sub-rule (1), the Returning Officer may interpret an entry in the electoral roll so as to overlook merely clerical or printing errors but shall record his reasons for doing so and the interpretation he has adopted on the counterfoil of the ballot paper issued to such person.

Election not to be invalid for failure to receive ballot paper when such a paper has been issued.

43. No election shall be invalidated by reason that an elector has not received his ballot paper, provided that a ballot paper has been issued to him in accordance with these rules.

Ballot paper to be returned after recording vote thereon.

44. An elector, on receipt of his ballot paper, if he desires to vote in the election, shall record his vote thereon and sign the declaration on its back in accordance with the instructions on the ballot paper and in the letter sent with the ballot paper. The elector shall then place the ballot paper in the envelope, close the envelope and enclose it in the cover and send the cover to the Returning Officer in accordance with the instructions contained in the letter so as to reach him before 5 p.m. on the date fixed in this behalf by the Governor in his discretion. Any cover which is not received by the Returning Officer before 5 p.m. on the date so fixed shall be rejected.

Recording of votes of illiterate and infirm electors.

45. If an elector is unable to read or write or by reason of some physical defect is incapacitated from recording his vote in the manner laid down in rule 44, it shall be competent for him to make his declaration and to record his vote by the hand of any magistrate to whom he is personally known or to whose satisfaction he has been identified; and such magistrate shall certify on the back of the ballot paper

the elector's incapacity and shall attest the fact that he was requested by the elector to sign the declaration on the back of the ballot paper and to mark the ballot paper for him and that the ballot paper was so signed and marked by him in the presence of the elector.

Issue of undelivered and duplicate ballot papers, etc.

46. When a ballot paper and other connected papers sent by post under rule 42 are for any reason returned undelivered, the Returning Officer may reissue them by registered post or himself hand them over to the elector on his personally applying for the same, but duplicate ballot and other connected papers may not be issued except in cases where an elector has inadvertently dealt with his papers in such a manner that they cannot conveniently be used. In such cases, the elector may, on delivering the paper or papers personally to the Returning Officer and satisfying him of the inadvertence, obtain new paper or papers in place of the spoilt paper or papers and the latter shall together with, in the case of a spoilt ballot paper, its counterfoil be marked as cancelled by the Returning Officer.

Notification of dates fixed under sub-rule (1) of rule 42 and under rule 44.

47. The Governor exercising his individual judgment shall notify in such manner as he thinks fit, the dates fixed under sub-rule (1) of rule 42 and under rule 44.

Appointment of time, place and date for the counting of votes.

48. (1) The Governor shall in his discretion appoint a date for the counting of votes. The Returning Officer shall fix a place and time at which the votes shall be counted on the date so appointed, and shall give notice of such date, time and place, in writing to all candidates and election agents.

(2) If at the time appointed, all the ballot boxes have not been received by the Returning Officer or if from any other unavoidable cause he is unable to proceed with the counting of votes, he shall with the previous consent of the Governor in his discretion postpone the counting to some other time and date appointed by the Governor in his discretion, and shall give notice thereof in writing to the candidates and election agents.

Persons who may be present at the counting of votes.

49. (1) No person shall be allowed to be present at the counting of votes except the Returning Officer and such persons as he may appoint to assist him in counting the votes, and such other persons as have a right to be present under sub-rule (5) of rule 8.

(2) No person shall be appointed to assist in counting the votes, who has been employed by or on behalf of any candidate for any purpose whatsoever connected with the election.

Procedure to be followed in counting the votes.

XXXIX of 1920.

50. On the date and at the time appointed under rule 48 the Returning Officer shall, before he commences to count the votes, read the provisions of section 14 of the Indian Election Offences and Inquiries Act, 1920, to such persons as may be present.

He shall then with respect to ballot boxes received from electoral areas of the constituency where the method of voting by ballot boxes has been followed proceed in the manner laid down in clauses (*a*) to (*d*) of rule 31, provided that the statement prepared by him under clause (*a*) of that rule shall not be shewn to any candidate, or his agent, or his representative duly authorised under sub-rule (5) of rule 8 until after the verification provided for in sub-rule (1) of rule 53.

After completing the counting of ballot papers contained in all the ballot boxes the Returning Officer shall with respect to ballot papers

received by him from electoral areas of the constituency where the method of voting by postal ballot was followed proceed as follows :—

(*a*) The Returning Officer shall after scrutiny, separate, or cause to be separated, the ballot papers which he deems valid from those which he rejects, endorsing on the latter the word "rejected" and the ground of rejection.

(*b*) The Returning Officer shall then count, or cause to be counted, the votes given to each candidate.

Declaration of candidates elected.

51. When the counting of votes recorded in favour of each candidate both in ballot papers contained in the ballot boxes and in ballot papers received from electoral areas where the method of voting by postal ballot was followed has been completed the Returning Officer shall, subject to the provisions of paragraph 19 of Part I of the Order, forthwith declare the candidates to whom the largest number of total valid votes has been given, to be elected.

Grounds for rejection of ballot papers.

52. (1) A ballot paper contained in the ballot boxes shall be rejected on any of the grounds set forth in sub-rule (1) of rule 33.

(2) A ballot paper received from electoral areas where the method of voting by postal ballot was followed shall be declared invalid if—

(*a*) it is not duly marked,

(*b*) more than one mark is placed on it against any candidate's name,

(*c*) the number of votes recorded thereon exceeds the number of candidates to be elected,

(*d*) a mark is placed on it in such a manner as to make it doubtful to which candidate it has been given,

(*e*) the declaration on the back of it has not been duly signed.

(3) The decision of the Returning Officer as to the validity of a ballot paper shall be final, subject only to reversal on an election petition claiming the seat.

Verification of statements submitted by presiding officers and sealing up of ballot papers.

53. (1) Of the election papers received under rule 27 from electoral areas where the method of voting by ballot boxes was followed the Returning Officer shall not open the sealed packets of the tendered votes, the marked copy of the electoral roll or the counterfoils of the ballot papers. He shall verify the statements submitted by the presiding officers under rule 28 by comparing with the statement prepared under rule 50 in accordance with clause (*a*) of rule 31 and with the number of counted votes and rejected ballot papers, the unused ballot papers in his possession and the tendered votes list, shall then re-close and re-seal each packet which has been opened by him, and shall record on each packet a description of its contents and the date of the election to which it refers.

(2) The Returning Officer shall then seal up in separate packets the counted and rejected ballot papers received by him from electoral areas where the method of voting by postal ballot was followed, and record on each such packet a description of its contents and the name of the constituency and the date of the election to which it refers.

Return by the Returning Officer.

54. The Returning Officer shall then prepare and certify a return in form X annexed to these rules setting forth—

(1) the names of the candidates for whom valid votes have been given,

(2) the total number of valid votes given for each candidate,

(3) the total number of votes declared invalid,

(4) the number of tendered votes,

(5) the result of the verification referred to in sub-rule (1) of rule 53,

(6) the names of the candidates elected,

and shall permit any candidate, or his election agent, or his representative duly authorised under sub-rule (5) of rule 8 to take a copy of, or an extract from, such return.

Part VI.—Special Rules for election to fill seats to be filled by persons elected by the members of the Bengal Legislative Assembly.

Special rules to be applicable in the case of an election by the members of the Bengal Legislative Assembly to fill seats in the Bengal Legislative Council.

55. Save as expressly provided in these rules the provisions of Parts II to IV of these rules shall not apply in the case of an election to fill a seat or seats to be filled by a person or persons elected by the members of the Bengal Legislative Assembly but in such case the provisions of this Part shall apply.

Definitions.

56. In this Part, unless there is anything repugnant in the subject or context :—

(1) the expression "continuing candidate" means any candidate not elected and not excluded from the poll ;

(2) the expression "first preference" means the figure "1" ; the expression "second preference" means the figure "2" ; and the expression "third preference" means the figure "3" set opposite the name of any candidate, and so on ;

(3) the expression "transferable paper" means a ballot paper on which a second or subsequent preference is recorded for a continuing candidate ;

(4) the expression "non-transferable paper" means a ballot paper on which no second or subsequent preference is recorded for a continuing candidate :

Provided that a paper shall be deemed to be a non-transferable paper in any case in which—

(*a*) the names of two or more candidates (whether continuing or not) are marked with the same figure, and are next in order of preference ; or

(*b*) the name of the candidate next in order of preference (whether continuing or not) is marked—

(*i*) by a figure not following consecutively after some other figure on the ballot paper ; or

(*ii*) by two or more figures ;

(5) the expression "original vote" in regard to any candidate means a vote derived from a ballot paper on which a first preference is recorded for that candidate ;

(6) the expression "transferred vote" in regard to any candidate means a vote derived from a ballot paper on which a second or subsequent preference is recorded for that candidate ;

(7) the expression "surplus" means the number of votes by which the total number of the votes, original and transferred, credited to any candidate, exceeds the quota as defined in sub-rule (*3*) of rule 78.

Returning Officer and his substitutes at an election by the members of the Bengal Legislative Assembly.

57. (1) The Returning Officer for every election by the members of the Bengal Legislative Assembly to fill a seat or seats in the Bengal Legislative Council shall be the person nominated under paragraph 20 of Part I of the Order by the Governor in his discretion.

(2) The Governor shall in his discretion, not later than the date of the notification calling upon the members of the Bengal Legislative Assembly to elect a member or members, appoint persons who may, subject to the control of the Returning Officer for such election, perform all or any of the functions of the Returning Officer at any such election :

Provided that no such person shall perform under this sub-rule any of the functions of the Returning Officer which relate to the acceptance of a nomination paper or to the scrutiny of the nominations or to the counting of votes, unless the Returning Officer is unavoidably prevented from performing the same.

(3) Reference to the Returning Officer in this Part of the rules or in relation to an election by the members of the Bengal Legislative Assembly to fill a seat or seats in the Bengal Legislative Council shall, unless a contrary intention appears, be deemed to include any person when performing any duty or function which he is authorised to perform under sub-rule (2).

List of members of the Bengal Legislative Assembly to be maintained by the Returning Officer.

58. (1) The Returning Officer shall maintain a list of members of the Bengal Legislative Assembly together with their addresses, corrected up-to-date, at his office.

(2) Immediately after the issue of the notification calling upon the members of the Bengal Legislative Assembly to elect a member or members to fill seats in the Bengal Legislative Council, the Returning Officer shall forward a copy of the list referred to in sub-rule (*1*) to each member of the Bengal Legislative Assembly. Provision may be made for the sale of copies of such lists to the public.

Nomination of candidates at election by the members of the Bengal Legislative Assembly.

59. (1) Any person may be nominated as a candidate for election to fill a seat to be filled by a person to be elected by the members of the Bengal Legislative Assembly if he is qualified to be chosen to fill that seat under the Act or any Order or rule made thereunder or an Act of the Provincial Legislature.

(2) The Governor shall in his discretion, under sub-paragraph (1) of paragraph 17 of Part I of the Order, fix for the election by the members of the Bengal Legislative Assembly to fill a seat or seats in the Bengal Legislative Council :—

(*a*) a date, not later than the fourteenth day after the date of the notification calling upon the members of the Bengal Legislative Assembly to elect a member or members, on or before which nominations are to be made;

(*b*) a further date, not later than the third day after the first-mentioned date, for the scrutiny of nominations ;

(*c*) a further date, not later than the day succeeding the date fixed for the scrutiny of nominations, on or before which candidatures may be withdrawn ; and

(*d*) a further date on which a poll shall, if necessary, be taken and votes shall be counted ;

and the dates so fixed shall be published by notification in the Gazette by the Governor exercising his individual judgment.

(3) On or before the date fixed under clause (*a*) of sub-rule (*2*), each candidate shall, either in person or by his proposer or seconder, or by a person authorised in writing by him, between the hours of eleven o'clock in the forenoon and three o'clock in the afternoon, deliver to the Returning Officer, or to such other person as may be appointed in this behalf under sub-rule (*2*) of rule 57, a nomination paper completed in the form specified in Schedule I and subscribed by the candidate himself as assenting to the nomination and by two persons referred to in sub-rule (*4*) as proposer and seconder.

(4) Any person who is at the time a member of the Bengal Legislative Assembly shall be qualified to subscribe, as proposer or seconder, as many nomination papers as there are vacancies to be filled, but no more.

(5) Every nomination paper delivered under sub-rule (*3*) shall be accompanied by a declaration in writing subscribed by the candidate that the candidate has appointed or does thereby appoint as his election agent for the election either himself or some one other person who is not disqualified under the Act or any Order or rule made thereunder or an Act of the Provincial Legislature for the appointment and who shall be named in the declaration ; and no candidate shall be deemed to be duly nominated unless such declaration is delivered along with the nomination paper.

(6) Any nomination paper which is not received before three o'clock in the afternoon on the date fixed under clause (*a*) of sub-rule (*2*) shall be rejected.

(7) On the presentation of a nomination paper, the Returning Officer may require the person presenting the same to produce a copy of the electoral roll in which the name of the candidate is included or of the necessary entry in such roll, or a copy of the Gazette containing the names of persons elected to the Bengal Legislative Assembly, in which the names of the candidate, his proposer and seconder are included or of the necessary entries in such roll or Gazette and shall satisfy himself that the names and numbers on the electoral roll or that the names in the Gazette, of the candidate, and his proposer and seconder

as entered in the nomination paper are the same as those entered in the electoral roll or in the Gazette. Where necessary he shall direct that the former be amended so as to be in accordance with the latter.

It shall be also competent for the Returning Officer to alter or amend any entry in the nomination paper presented to him with a view to ensuring accurate and adequate publication under sub-rule (*8*) of names of candidates and of persons who have subscribed the nomination paper as proposer and seconder.

(8) The Returning Officer or other person authorised shall, on receiving a nomination paper under sub-rule (*3*), inform the person or persons delivering the same of the date, time and place fixed for the scrutiny of nominations, and shall enter in the nomination paper its serial number and shall sign thereon a certificate stating the date on which and the hour at which the nomination paper has been delivered to him and the person by whom it was so delivered, and shall, as soon as may be thereafter, cause to be affixed in some conspicuous place in his office a notice of the nomination containing descriptions, similar to those contained in the nomination paper, both of the candidate and of the persons who have subscribed the nomination paper as proposer and seconder.

(9) Any candidate may withdraw his candidature by notice in form 11 annexed to these rules subscribed by him and assented to by the proposer and seconder and delivered to the Returning Officer or other person authorised either by such candidate in person or by his proposer or seconder or by a person authorised in writing by the candidate before three o'clock in the afternoon on the date fixed under clause (*c*) of sub-rule (*2*), and a candidate who has withdrawn his candidature shall not be allowed to cancel the withdrawal or to be re-nominated as a candidate for the same election :

Provided that if the last day for the delivery of notice of withdrawal of candidature under this sub-rule is a public holiday within the meaning of section 25 of the Negotiable Instruments Act, 1881, or has been notified by the Governor as a day to be observed as a holiday in Government offices, the notice of withdrawal of candidature shall be construed as having been delivered in due time if it is delivered on the next succeeding day which is neither such a public holiday nor a day so notified. XXVI of 1881.

(10) The Returning Officer or other person authorised shall, on receiving a notice of withdrawal under sub-rule (*9*), as soon as may be, cause a notice of the withdrawal to be affixed in some conspicuous place in his office.

60. (1) At the time of delivery of a nomination paper under sub-rule (*3*) of rule 59, each candidate shall enclose with the nomination paper a Government treasury receipt (chalan) showing that a deposit of five hundred rupees has been made by him in the treasury ; and no candidate shall be deemed to be duly nominated unless such deposit has been made and treasury receipt has been enclosed with the nomination paper. Deposit on nomination.

(2) If a candidate by whom or on whose behalf the deposit referred to in sub-rule (*1*) has been made withdraws his candidature in the manner and within the time specified in sub-rule (*9*) of rule 59, or if the nomination of any such candidate is refused, the deposit shall be returned

to the person by whom it was made; and, if any candidate dies before the commencement of the poll, any such deposit, if made by him, shall be returned to his legal representative or, if not made by the candidate, shall be returned to the person by whom it was made.

(3) If a candidate by whom or on whose behalf the deposit referred to in sub-rule (*1*) has been made is not elected and the number of votes polled by him does not exceed one-eighth of the total number of votes polled at an election in which only one seat is to be filled, or one-twentieth of the total number of votes polled at an election in which more seats than one are to be filled, the deposit shall be forfeited to the Government:

Provided that, at the general election held for the purpose of constituting the Bengal Legislative Council under the Act, such deposit shall only be forfeited if the number of votes polled by the candidate does not exceed one-sixtieth of the total number of votes polled.

(4) For the purposes of sub-rule (*3*), the total number of votes polled shall be deemed to be the number of ballot papers, other than rejected ballot papers, counted, and the number of votes polled by a candidate shall be deemed to be the number of valid votes polled by him as first preferences.

(5) The deposit made by or on behalf of a candidate, whether such candidate is elected or not, shall, if it is not forfeited under sub-rule (*3*), be returned to such candidate or to the person who has made the deposit on his behalf, as the case may be, after the publication of the result of the election in the Gazette:

Provided that if a candidate is duly nominated at an election in a territorial constituency of the Bengal Legislative Council and also at an election by the members of the Bengal Legislative Assembly to fill seats in the Bengal Legislative Council, not more than one of the deposits made by him or on his behalf shall be returned and the remainder shall be forfeited to the Government.

Scrutiny of nominations.

61. (1) On the date fixed for the scrutiny of nominations under sub-rule (*2*) of rule 59, the candidates, their election agents, one proposer and one seconder of each candidate, and one other person duly authorised in writing by each candidate, but no other person, may attend at such time and place as the Returning Officer may appoint, and the Returning Officer shall give them all reasonable facilities for examining the nomination papers of all candidates which have been delivered within the time and in the manner laid down in rule 59.

(2) (*a*) The Returning Officer shall then examine the nomination papers and shall decide all objections which may be made to any nomination, and may, either on such objection or on his own motion, after such summary inquiry if any, as he thinks necessary, refuse any nomination on any of the following grounds:—

(*i*) that the candidate is not qualified to be chosen to fill the seat under the Act or under an Act of the Provincial Legislature or under any Order or rule made under the Act; or

(*ii*) that the candidate is disqualified for being chosen to fill the seat under section 69 or any other provision of the Act or under an Act of the Provincial Legislature or under any Order or rule made under the Act; or

(*iii*) that a proposer or seconder is disqualified from subscribing a nomination paper under sub-rule (*4*) of rule 59 ; or

(*iv*) that there has been any failure to comply with any of the provisions of rule 59 or rule 60 ; or

(*v*) that the candidate is not identical with the person whose number or name on the electoral roll is given in the nomination paper as the number or name of such candidate ; or

(*vi*) that the candidate or any proposer or seconder is not identical with the person who has been elected to the Bengal Legislative Assembly and whose name as such is given in the nomination paper as such candidate, proposer or seconder ; or

(*vii*) that the signature of the candidate or any proposer or seconder is not genuine or has been obtained by fraud.

(*b*) For the purposes of this rule :—

(*i*) the production of any certified copy of an entry made in the electoral roll of any territorial constituency or the production of a copy of the Gazette in which the name of a person was published as elected to the Bengal Legislative Assembly shall be conclusive evidence of the right of any elector or person named in that entry or Gazette to stand for election or to subscribe a nomination paper, as the case may be, unless it is proved that the candidate is disqualified under the Act or any Order or rule made thereunder or an Act of the Provincial Legislature, or that the proposer or seconder is disqualified under sub-rule (*4*) of rule 59 ; and

(*ii*) where a person has subscribed whether as proposer or seconder a larger number of nomination papers than there are vacancies to be filled, those of the papers so subscribed which have been first received, up to the number of vacancies to be filled, shall be deemed to be valid.

(*c*) Nothing contained in sub-clause (*iii*), sub clause (*iv*), sub-clause (*v*), sub-clause (*vi*) or sub-clause (*vii*) of clause (*a*) shall be deemed to authorise the refusal of the nomination of any candidate on the ground of any irregularity in respect of a nomination paper, if the candidate has been duly nominated by means of another nomination paper in respect of which no irregularity has been committed.

(*d*) The Returning Officer shall not refuse any nomination paper on the ground of a slight technical defect such as the wrong spelling of a name.

(3) (*a*) The Returning Officer shall endorse on each nomination paper his decision accepting or rejecting the same and, if the nomination paper is rejected, shall record in writing a brief statement of his reasons for such rejection.

(*b*) The scrutiny shall be completed on the day fixed in this behalf under clause (*b*) of sub-rule (*2*) of rule 59 and no adjournment of the proceedings shall be allowed.

(4) On completion of the scrutiny of nominations and after expiry of the period within which candidatures may be withdrawn, under sub-rule (*9*) of rule 59, the Returning Officer shall forthwith prepare a list of valid nominations and cause it to be affixed in some conspicuous place in his office.

Death of candidate before poll.

62. If a candidate who has been duly nominated under these rules dies after the date fixed for the scrutiny of nominations and before the commencement of the poll, the Returning Officer or other authorised person referred to in sub-rule (*3*) of rule 57 shall, upon being satisfied of the fact of the death of the candidate, countermand the poll and report the fact to the Governor, and all proceedings with reference to the election shall be commenced anew in all respects as if for a new election :

Provided that no fresh nomination shall be necessary in the case of a candidate whose nomination had been valid at the time of the countermanding of the poll.

Procedure at election.

63. (1) If the number of candidates who are duly nominated and who have not withdrawn their candidature in the manner and within the time specified in sub-rule (*9*) of rule 59 exceeds that of the seats to be filled, the Returning Officer shall forthwith publish in the Gazette, and in such other manner, as the Governor may direct, and in such places as the Returning Officer may consider necessary, a list in form III annexed to these rules containing the names in alphabetical order and addresses of the candidates as given in the nomination papers, and a poll shall be taken.

(2) If the number of such candidates is equal to the number of seats to be filled the Returning Officer shall declare all such candidates to be duly elected to fill those seats.

(3) If the number of such candidates is less than the number of seats to be filled, the Returning Officer shall declare all such candidates, if any, to be elected to fill the seats, and the Governor exercising his individual judgment shall, by a notification in the Gazette, call upon the members of the Bengal Legislative Assembly to elect a person or persons as the case may be, within such time as may be fixed by him in his discretion and specified in the notification :

Provided that where the members of the Bengal Legislative Assembly having already been called upon under this sub-rule, have failed to elect a person or the requisite number of persons, as the case may be, to fill the vacancy or vacancies, the Governor shall not be bound to call again upon such members to elect a person or persons until such time, if any, as he thinks fit.

(4) At an election by the members of the Bengal Legislative Assembly to fill seats in the Bengal Legislative Council where a poll is taken votes shall be given by ballot in the manner provided in this Part and no votes shall be received by proxy :

Provided that at an election by the members of the Bengal Legislative Assembly to fill a casual vacancy in a seat in the Bengal Legislative Council or at an election held in pursuance of a notification issued

under sub-rule (3) to fill only one seat in the Bengal Legislative Council, the provisions of rules 73, 74 and 75 shall not be applicable and the provisions of rule 18 shall be substituted therefor and shall *mutatis mutandis* apply to every such election, and the ballot paper at any such election shall be in form IV annexed to these rules instead of being in form XIV annexed to these rules, and that the provisions of rules 78 and 79 shall not be applicable and the provisions of rules 31, 32 and 33 shall be substituted therefor and shall *mutatis mutandis* apply to every such election.

(*5*) A casual vacancy in a seat held by a member who was elected under this Part by the members of the Bengal Legislative Assembly shall be filled under this Part by a person of the same community as the member by whom the seat was held.

Fixing of the time and place for the poll.

64. The Governor shall fix the time and place at which the poll shall be taken on the date fixed for the poll under clause (*d*) of sub-rule (2) of rule 59 and the time and place so fixed shall be published either by notification in the Gazette by the Governor exercising his individual judgment or in such other manner as the Governor may direct.

Notice inviting members of the Assembly to meet at the time and place fixed for the poll, and appointment of Polling Officers to assist the Returning Officer.

65. (1) As soon as may be after the expiry of the period within which candidatures may be withdrawn under sub-rule (*9*) of rule 59, the Returning Officer shall by notice in writing invite each member of the Bengal Legislative Assembly to meet, at the place and at the time fixed for the poll under rule 64 for the purpose of the election under this Part.

(2) Notice under sub-rule (1) shall, if possible, be served personally and in default of personal service shall be served by registered post, provided that in the case of necessity the notice may be served by telegram.

(3) A member of the Bengal Legislative Assembly who attends a place fixed for the poll in pursuance of a notice issued under sub-rule (1) for the purpose of election under this Part may draw travelling and halting allowances at such rates and subject to such conditions as are applicable to members when summoned to attend meeting of the Legislature.

(4) The Returning Officer shall preside over the election and also shall appoint such other persons (hereinafter referred to as Polling Officers) to assist him as he thinks necessary.

Articles to be provided at the place fixed for the poll.

66. The Returning Officer shall provide at the place fixed for the poll materials sufficient for the purpose of enabling electors to mark the ballot papers, and as many ballot boxes as may be necessary. He shall also provide a sufficient number of copies of the list of members of the Bengal Legislative Assembly entitled to vote for the use of the members.

Ballot boxes to be locked up and sealed before commencement of poll.

67. Every ballot box shall be so constructed that the ballot papers can be introduced therein, but cannot be withdrawn therefrom, without the box being unlocked. The Returning Officer, immediately before the commencement of the poll, shall show each ballot box to be used

at the poll to such persons as may be present at the place fixed for the poll so that they may see that it is empty, and he shall then lock it up, and place his seal upon it in such manner as to prevent its being opened without breaking such seal and shall keep it so locked and sealed.

Persons who may be present at the place fixed for the poll.

68. The Returning Officer shall exclude from the place fixed for the poll all other persons except the polling officers, the candidates, and the members of the Bengal Legislative Assembly:

Provided that if a candidate is unable to be present at the time fixed for the poll, the Returning Officer may admit either his election agent or one representative of such candidate authorised in writing by such candidate.

Delivery of ballot papers to the members of the Assembly for the recording of votes.

69. At the time fixed for the poll under rule 64 the Returning Officer with the help of the polling officers shall deliver to each member of the Bengal Legislative Assembly present (hereinafter referred to as "elector") a ballot paper which shall contain the names of the candidates arranged alphabetically and shall be in the form set out in form XIV annexed to these rules.

Procedure before delivery of ballot papers to electors.

70. Immediately before a ballot paper is delivered to an elector, a mark shall be placed in the list of members against the name of the elector to denote that he has received a ballot paper. No other mark or writing shall be put against the name in such list.

Supply of duplicate ballot paper when ballot paper is spoilt through inadvertence.

71. An elector who has inadvertently dealt with his ballot paper in such a manner that it cannot conveniently be used as a ballot paper may, on delivering it to the Returning Officer and satisfying him of the inadvertence, obtain another ballot paper in place of the spoilt ballot paper, and the latter shall, together with its counterfoil, be marked as cancelled by the Returning Officer.

Procedure before the recording of votes.

72. (1) After the Returning Officer has satisfied himself that ballot papers have been delivered to all the electors present and after the expiry of such further time as the Returning Officer may, as a measure of grace, allow for delivery of such papers to any late comers, the Returning Officer shall call on the electors present to proceed to record their votes into the places provided therefor.

(2) No ballot paper shall be delivered to any elector after the time allowed by the Returning Officer under sub-rule (1).

(3) The Returning Officer may at any time explain to the electors when so requested by them, the instructions contained on the back of the ballot papers for the recording of votes.

Manner of recording votes.

73. Every elector shall then proceed under the direction of the Returning Officer to a place screened from observation and shall record his vote in accordance with the instructions set out on the back of the ballot paper. He shall then, before quitting such place, fold up his ballot paper so as to conceal his vote, and shall proceed to the ballot box provided and put the ballot paper so folded up into the ballot box. Each elector shall quit the place at which the ballot box is situated as soon as he has put his ballot paper into the ballot box.

Votes and preferences to be exercised by the electors.

74. (1) Every elector shall have as many preferences as there are candidates to be elected, but no ballot paper shall be considered invalid solely on the ground that all such preferences are not marked.

(2) An elector in giving his vote—

(*a*) shall place on his ballot paper the figure 1 in the space opposite the name of the candidate whom he chooses for his first preference ; and

(*b*) may, in addition, place on his ballot paper the figure 2 or the figures 2 and 3, or 2, 3 and 4, and so on, in the spaces opposite the names of other candidates in the order of his preference.

Grounds for declaring ballot papers invalid.

75. A ballot paper shall be invalid on which—

(*a*) the figure 1 is not marked ; or

(*b*) the figure 1 is set opposite the name of more than one candidate ; or is so placed as to render it doubtful to which candidate it is intended to apply ; or

(*c*) the figure 1 and some other figure are set opposite the name of the same candidate ; or

(*d*) any mark is made by which the elector may afterwards be identified.

Counting of votes by the Returning Officer.

76. After the Returning Officer is satisfied that each elector present has had sufficient time to record his vote and to place the ballot paper in the allotted box he shall declare the polling closed after which no ballot paper shall be placed in any ballot box, and shall immediately proceed to count the votes.

If from any unavoidable cause the Returning Officer is unable to proceed immediately with the counting of votes, he shall with the previous consent of the Governor in his discretion postpone the counting to some other time and date appointed by the Governor in his discretion and shall give notice thereof in such manner as he thinks fit to the candidates and election agents.

Persons who may be present at the counting of votes.

77. (1) No person, except the Returning Officer, such persons as he may appoint to assist him in counting the votes, the candidates and either the election agent of each candidate, or one representative of each candidate authorised in writing by the candidate, shall be allowed to be present at the counting of votes.

(2) No person shall be appointed to assist in counting the votes, who has been employed by or on behalf of any candidate for any purpose whatsoever connected with the election.

Procedure to be followed at the counting of votes and in declaring candidates elected.

XXXIX of 1920.

78. (1) Before he begins to count the votes the Returning Officer shall first read out the provisions of section 14 of the Indian Election Offences and Inquiries Act, 1920, to such persons as may be present and shall then open the ballot boxes, and, after scrutiny, separate the ballot papers which he deems valid from those which he rejects, endorsing on the latter the word "rejected" and the ground of rejection, and after rejecting any that are invalid, shall arrange the remainder in parcels according to the first preferences recorded for each candidate.

(2) The Returning Officer shall then count the number of papers in each parcel, and credit each candidate with one vote in respect of each valid paper on which a first preference has been recorded for him, and he shall ascertain the total number of valid papers.

(3) The Returning Officer shall then divide the total number of valid papers by a number exceeding by one the number of vacancies to be filled, and the result increased by one, disregarding any fractional remainder, shall be the number of votes sufficient to secure the return of a candidate (hereinafter called the "quota").

(4) If at any time the number of votes credited to a candidate is equal to or greater than the quota, that candidate shall be declared elected.

(5) (*a*) If at any time the number of votes credited to a candidate is greater than the quota, the surplus shall be transferred in accordance with the provisions of this sub-rule to the continuing candidates indicated on the ballot papers in the parcel of the elected candidate, as being next in order of the voters' preference.

(*b*) (*i*) If the votes credited to an elected candidate consist of original votes only, the Returning Officer shall examine all the papers in the parcel of the elected candidate whose surplus is to be transferred, and shall arrange the transferable papers in sub-parcels according to the next preferences recorded thereon.

(*ii*) If the votes credited to an elected candidate consist of original and transferred votes, or of transferred votes only, the Returning Officer shall examine the papers contained in the sub-parcel last received by the elected candidate and shall arrange the transferable papers therein in further sub-parcels according to the next preferences recorded thereon.

(*iii*) In either case the Returning Officer shall make a separate sub-parcel of the non-transferable papers and shall ascertain the number of papers in each sub-parcel of transferable papers and in the sub-parcel of non-transferable papers.

(*c*) If the total number of papers in the sub-parcels of transferable papers is equal to or less than the surplus, the Returning Officer shall transfer each sub-parcel of transferable papers to the continuing candidate indicated thereon as the voters' next preference.

(*d*) (*i*) If the total number of transferable papers is greater than the surplus, the Returning Officer shall transfer from each sub-parcel the number of papers which bears the same proportion to the number of papers in the sub-parcel as the surplus bears to the total number of transferable papers.

(*ii*) The number of papers to be transferred from each sub-parcel shall be ascertained by multiplying the number of papers in the sub-parcel by the surplus and dividing the result by the total number of transferable papers. A note shall be made of the fractional parts, if any, of each number so ascertained.

(*iii*) If, owing to the existence of such fractional parts, the number of papers to be transferred is less than the surplus, so many of these fractional parts taken in the order of their magnitude, beginning with the largest, as are necessary to make the total number of papers to be transferred equal to the surplus, shall be reckoned as of the value of unity, and the remaining fractional parts shall be ignored.

If two or more fractional parts are of equal magnitude that fractional part shall be deemed to be the larger which arises from the larger sub-parcel, and if the sub-parcels in question are equal in size, preference shall be given to the candidate who obtained the larger number of original votes.

If the original votes are equal, the Returning Officer shall decide by lot in whose favour the vote shall be given, in such manner as he thinks fit.

(*iv*) The particular papers to be transferred from each sub-parcel shall be those last filed in the sub-parcel.

(*v*) Each paper transferred shall be marked in such a manner as to indicate the candidate from and to whom the transfer is made.

(*e*) (*i*) If more than one candidate has a surplus, the largest surplus shall be first dealt with.

(*ii*) If two or more candidates have each the same surplus, regard shall be had to the number of original votes obtained by each candidate, and the surplus of the candidate credited with the largest number of original votes shall be first dealt with, and, if the numbers of the original votes are equal, the Returning Officer shall decide which surplus he will first deal with.

(*iii*) The Returning Officer need not transfer the surplus of an elected candidate when that surplus, together with any other surplus not transferred, does not exceed the difference between the totals of the votes credited to the two continuing candidates lowest on the poll.

(6) (*a*) If at any time no candidate has a surplus (or when under the preceding sub-rule any existing surplus need not be transferred) and one or more vacancies remain unfilled, the Returning Officer shall exclude from the poll the candidate credited with the lowest number of votes, and shall examine all the papers of that candidate, and shall arrange the transferable papers in sub-parcels according to the next preferences recorded thereon for continuing candidates, and shall transfer each sub-parcel to the candidate for whom that preference is recorded.

(*b*) If the total of the votes of the two or more candidates lowest on the poll, together with any surplus votes not transferred, is less than the votes credited to the next highest candidate, the Returning Officer may in one operation exclude those candidates from the poll and transfer their votes in accordance with the preceding sub-rule.

(*c*) If, when a candidate has to be excluded under this sub-rule, two or more candidates have each the same number of votes and are lowest on the poll, regard shall be had to the number of original votes credited to each of those candidates, and the candidates with the fewest original votes shall be excluded, and, where the numbers of the original votes are equal, regard shall be had to the total number of votes credited to those candidates at the first transfer at which they had an unequal number of votes, and the candidate with the lowest number of votes at that transfer shall be excluded, and, where the numbers of votes credited to those candidates were equal at all transfers, the Returning Officer shall decide which shall be excluded.

(7) (*a*) Whenever any transfer is made under any of the preceding sub-rules, each sub-parcel of papers transferred shall be added to the parcel, if any, of papers of the candidate to whom the transfer is made,

and that candidate shall be credited with one vote in respect of each paper transferred. Such papers as are not transferred shall be set aside as finally dealt with, and the votes given thereon shall thenceforth not be taken into account.

(*b*) If after any transfer a candidate has a surplus, that surplus shall be dealt with in accordance with and subject to the provisions contained in sub-rule (6) before any other candidate is excluded.

(8) (*a*) When the number of continuing candidates is reduced to the number of vacancies remaining unfilled, the continuing candidates shall be declared elected.

(*b*) When only one vacancy remains unfilled, and the votes of some one continuing candidate exceed the total of all the votes of the other continuing candidates, together with any surplus not transferred, that candidate shall be declared elected.

(*c*) When the last vacancies can be filled under this sub-rule, no further transfer of votes need be made.

Recount of votes when to be made.

79. Any candidate, or in his absence his election agent or duly authorized representative, may, at any time during the counting of the votes, either before the commencement or after the completion of any transfer of votes (whether surplus or otherwise), request the Returning Officer to re-examine and recount the papers of all or any candidates (not being papers set aside at any previous transfer as finally dealt with), and the Returning Officer shall forthwith re-examine and recount the same accordingly. The Returning Officer may also at his discretion recount votes either once or more often in any case in which he is not satisfied as to the accuracy of any previous count:

Provided that nothing herein shall make it obligatory on the Returning Officer to recount the same votes more than once.

Return by the Returning Officer.

80. Upon the completion of the counting the Returning Officer shall prepare and certify a return in form X annexed to these rules setting forth—

(*i*) the names of the candidates for whom valid votes have been given;

(*ii*) the number of valid votes given to each candidate;

(*iii*) the number of votes declared invalid and rejected;

(*iv*) the names of the persons declared elected;

and shall permit any candidate or his election agent or duly authorized representative to take a copy of, or an extract from, the return.

The Returning Officer shall also seal up in separate packets the counted and rejected ballot papers and record on each such packet a description of its contents and the date of the election by the members of the Bengal Legislative Assembly to which it refers.

Reporting of the result of the election and publication of the names of elected candidates.

81. The Returning Officer shall without delay report the result of the election to the Secretary to the Bengal Legislative Council or to such officer as the Governor may direct, and the declaration containing the name or names of the candidate or candidates elected shall be published in the Gazette.

Custody, etc., of the return and the papers relating to the election.

82. (1) The Returning Officer shall, after reporting the result of the election under rule 81, forward the return to the Secretary to the Government of Bengal in the Reforms Department and forward all other papers relating to the election to the Commissioner of the Presidency Division for custody.

(2) The papers relating to election mentioned in sub-rule (1) except the packets of ballot papers and their counterfoils shall be retained for a period of three years unless their retention for a longer period is otherwise ordered by a competent authority. The public shall have a right to inspect such papers and to get attested copies thereof on payment of the fees laid down in the Bengal Records Manual, 1917.

(3) The provisions of rules 37 and 38 shall apply to packets of ballot papers and of the counterfoils thereof and to copies of returns forwarded by the Returning Officer under sub-rule (1).

Part VII.—Vacation of seats and notification of casual vacancies.

Seats in the Council when to become vacant in case of election of the same person to more than one seat.

83. If a person is elected to more than one seat in the Bengal Legislative Council, then unless within seven days from the date of the publication in the Gazette of the declarations containing the names of that person as having been so elected, or, where such publication has been made on different dates, unless within seven days from the latest of such dates, such person resigns all but one of the seats, all the said seats shall become vacant.

Casual vacancies.

84. When before the expiration of the term of office of a member elected under these rules his seat becomes vacant or is declared vacant, or the election of a member is declared void, the Governor exercising his individual judgment shall, by notification in the Gazette, call upon the constituency concerned or the members of the Bengal Legislative Assembly, as the case may be, to elect a person, for the purpose of filling the vacancy so caused, within such time as may be fixed in this behalf by the Governor in his discretion and specified in the notification and these rules shall apply, as far as may be, to the procedure for the election of a member to fill such vacancy:

Provided that every notification issued under this rule calling upon the members of the Bengal Legislative Assembly to elect a person for the purpose of filling a casual vacancy in a seat held by a person who was elected by such members shall specify that the person to be elected in pursuance of the said notification shall be of the same community as the person by whom the seat was held.

Part VIII.—General Provisions.

Notification for the election of persons to fill seats in the Council.

85. (1) For the purpose of constituting the Legislative Council of the Province under the Act in due time the Governor exercising his individual judgment shall, at such time as he may think fit, by a notification in the Gazette, call upon every territorial constituency to elect in accordance with these rules a member or members within

such time as may be fixed in this behalf by the Governor in his discretion and specified in that notification, and by another notification in the Gazette, after the names of the members of the Bengal Legislative Assembly elected have been notified in the Gazette, call upon such members to elect in accordance with these rules members within such time as may be fixed in this behalf by the Governor in his discretion and specified in such notification.

(2) For the purpose of filling the seats of members retiring on the expiration of their respective terms of office in every third year after the constitution of the Legislative Council of the Province, the Governor exercising his individual judgement shall, by a notification in the Gazette, call upon each of the territorial constituencies concerned to elect in accordance with these rules a member or members within such time as may be fixed in this behalf by the Governor in his discretion and specified in that notification, and by another notification in the Gazette call upon the members of the Bengal Legislative Assembly to elect in accordance with these rules members within such time as may be fixed in this behalf by the Governor in his discretion and specified in such notification :

Provided that if the Governor exercising his individual judgment thinks fit either of the said notifications may be issued under this sub-rule at any time not being more than four months prior to the date on which the terms of office of the retiring members would expire under paragraph 18 of the Fifth Schedule to the Act.

Publication of result of election and names of persons chosen by the Governor.

86. As soon as may be after the expiration of the time fixed for the election of members under sub-rule (1) or sub-rule (2) of rule 85, as the case may be and the publication of the notification containing the names of persons chosen by the Governor in his discretion under clause (*d*) of paragraph 14 of the Fifth Schedule to the Act, to fill seats in the Legislative Council, the names of the members elected for the various constituencies and by the members of the Bengal Legislative Assembly at such election together with the names of the persons so chosen by the Governor shall be notified in the Gazette.

Commencement of the term of office of members of the Council.

87. The term of office under paragraph 18 of the Fifth Schedule to the Act of members elected for the various constituencies at election held in pursuance of notifications issued under sub-rule (1) or sub-rule (2) of rule 85 and of members chosen by the Governor in his discretion under clause (*d*) of paragraph 14 of the Fifth Schedule to the Act, shall commence from the date of the notification of their names in the Gazette under rule 86. The term of office under the said paragraph 18 of a member elected at an election held in pursuance of a notification issued under rule 84 and of a member chosen by the Governor in his discretion under clause (*d*) of paragraph 14 of the Fifth Schedule to the Act to fill a casual vacancy in the seat of a member previously chosen by the Governor under the said clause shall respectively commence from the date of publication in the Gazette of the declaration containing the name of the person elected under sub-rule (7) of rule 8 or rule 81, as the case may be, and the publication in the Gazette of the notification issued under clause (*d*) of paragraph 14 of the Fifth Schedule to the Act.

Part IX.—Custody and preservation of election papers.

Custody and preservation of certain election papers.

88. (1) The papers mentioned in the first column of Schedule II hereto annexed relating to elections in the territorial constituencies shall be kept in the custody mentioned in the second column thereof for the period specified in the third column thereof, unless their retention for a longer period is otherwise ordered by competent authority.

(2) The public shall have a right to inspect the election papers mentioned in Schedule II and to get attested copies thereof on payment of the fees laid down in the Bengal Records Manual, 1917.

Part X.—Special provisions.

Powers of Governor in case of difficulty.

89. If any difficulty arises as to the holding of any election under the provisions of these rules, or of the Act, or of any Order or other rule made under the Act, or of any Act of the Provincial Legislature, the Governor exercising his individual judgment may by order do anything not inconsistent with such provisions which appears to him to be necessary for the proper holding of the election.

Interpretation in case of doubt.

90. If any question arises as to the interpretation of these rules otherwise than in connection with an election inquiry held under the Act or any Order or rule made thereunder, or under an Act of the Provincial Legislature, the question shall be referred for the decision of the Governor exercising his individual judgment, and his decision shall be final.

FORM I.

Form of Notice.

[Rule 4(3).]

Whereas the constituency of the Bengal Legislative Council has been called upon by notification to elect a member (members) on or before , 1, , the Returning Officer of the said constituency, do hereby give the following :—

Public Notice.

(*i*) The number of persons to be elected is

(*ii*) Nomination papers may be delivered to the undersigned at (office) or if he is unavoidably prevented from receiving the same to at . They should be presented between 11 a.m. and 3 p.m., on or before (date).

(*iii*) Forms of nomination paper may be obtained at the offices of the persons abovementioned between the hours of (hour) and (hour) from (date) to (date).

(*iv*) The nomination papers will be taken up for scrutiny at (hours) on (date) in (place).

(*v*) In the event of the election being contested, the poll will take place on between the hours of and with an interval of rest between and

Returning Officer.

Date

Address

FORM II.

Form of Notice of withdrawal.

[Rules 4(10) and 59(9).]

Bengal Legislative Council

.....*Constituency.*

Election by the members of the Bengal Legislative Assembly.

I, of

a candidate nominated for the above constituency/at the election by the members of the Bengal Legislative Assembly do hereby give the Returning Officer notice that I withdraw my candidature.

Dated this day of 193 .

Signature of candidate.

I, of

who subscribed the nomination paper of the above candidate as proposer agree to his withdrawal of candidature.

Dated this day of 193 .

Signature of proposer.

I, of

who subscribed the nomination paper of the above candidate as seconder agree to his withdrawal of candidature.

Dated this day of 193 .

Signature of seconder.

This notice of withdrawal was delivered to me at my office at (date and hour) by the candidate/proposer/seconder/person authorised.

Returning Officer or other authorised person.

FORM III.

Bengal Legislative Council.

[Rules 8(1) and 63(1).]

.....*Constituency.*

Election by the members of the Bengal Legislative Assembly.

Final list of candidates for election.

Serial No.	Name of candidate.	Address of candidate.
1		
2		
3		
4		

etc.

NOTE.—The poll will be taken on the day of 19 between and at the polling stations to be notified separately.

Returning Officer.

FORM IV.

Form of front of ballot paper.

(Rule 21.)

Counterfoil..... Outerfoil.

Serial No..... Front.

Constituency.....		
Polling station.....		
Distinctive letter or number of polling station.....		
Number of elector on electoral roll....		

Note.— It is considered important that the whole of the outerfoil of the ballot paper should be taken up by the cage containing the names of candidates and spaces for recording votes and the instructions to voter.

Instructions.

(1) The number of members for whom you may vote is.....

(2) Place a cross thus X or a mark against the name of the candidate/ each of the candidates for whom you wish to vote.

(3) The mark should be placed against not more than..... candidate(s).

Back of outerfoil.

Serial No.

FORM V.

Tendered Votes List.

(Rule 22.)

Polling station.....

Name of constituency.	Name of elector.	Number in electoral roll.	Distinctive letter or number of the polling station.	Signature or thumb impression of elector and his address.

Signature of the Presiding Officer.

Date.....

FORM VI.

List of challenged votes.

[Rule 23(1).]

Signature sheet No.....

Number in electoral roll.	Name.	Signature of elector, if literate, or thumb impression, if illiterate, and address.	Name of identifier, if any.	Order of Presiding Officer in each case.

Date..... *Signature of the Presiding Officer.*

FORM VII.

Application for a certificate entitling a presiding officer, polling officer or polling agent or public servant to vote at the polling station where he is authorised or appointed for duty.

[Rules 25(2).]

To

The Returning Officer,

.....Constituency.

The applicant having been authorised or appointed for duty as a presiding officer/polling officer/polling agent/public servant at.....at which he is not entitled to vote begs to apply for a certificate under rule 25 of the Bengal Legislative Council Electoral (Conduct of Elections) Rules, 1936, and submits the following particulars :—

(1) Name of the applicant.....

(2) Name of the constituency in which the applicant is an elector.....
.....

(3) Number of the applicant in the electoral roll of the constituency.....

(4) Name of the subdivision/name of municipality and number of ward included in the electoral area to which the applicant belongs in the constituency.....

(5) Name of the polling station at which the applicant is entitled to vote.....

(6) Name of the polling station at which the applicant is authorised or appointed for duty.....

Signature of the applicant.

Dated.....

FORM VIII.

Certificate entitling a presiding officer, polling officer or polling agent or public servant to vote at the polling station where he is authorised or appointed for duty.

[Rule 25(2).]

A, B being duly registered as elector No.....in Ward No.....

of.....Municipality/Union .....in police-station

.....Constituency.....in the

general/bye election of the.....Constituency of the Bengal Legislative Council and being duly authorised /appointed for duty as presiding officer/polling officer/polling agent/public servant at polling station.....of.....Constituency is entitled to record his vote at polling station.....of.....Constituency and at no other during the said election.

Returning Officer.

Dated..... .....*Constituency.*

FORM IX.

Ballot Paper Account.

(Rule 28)

Bengal Legislative Council

.... *Constituency*

....*Polling Station*

	Ordinary ballot papers	Tendered ballot papers
1 Number of ballot papers received by the presiding officer.		
2. Number of unused ballot papers returned		
3 Number of spoilt ballot papers .. .		
4. Number of tendered ballot papers used ..		
5. Number of ballot papers dealt with under rule 26		
6 Number of ballot papers issued ..		

Signature of the Presiding Officer

Date .. .

FORM X.

Form of Return of Election.

[Rules 35, 54 and 80.]

Bengal Legislative Council.

.....*Constituency.*

Election by the members of the Bengal Legislative Assembly.

Name of candidate.	Number of valid votes recorded in favour of the candidate.
1	2
(1)	
(2)	
Etc.	
Etc.	

Total number of valid votes.....

Total number of invalid votes.....

*Total number of tendered vote .....

*The result of the verification referred to in rule 34/53(1) of the Bengal Legislative Council Electoral (Conduct of Elections) Rules, 1936.....

.....

I declare that (1) (Name).....

(Address) .....

(2) (Name).....

(Address) .....

Etc.....

..... has/have been duly elected.

(Signature)
Returning Officer.

Dated the.....day of.....19 .

* Not to be filled up in the case of the election by the members of the Bengal Legislative Assembly

FORM XI.

Form of Ballot Paper.

[Rule 42 (1).]

Election for the European Constituency, 193 .

Counterfoil No.....

Name of elector and number on the electoral roll.....
.....

Armstrong, Richard	
Duncan, Robert	
McInnes, Douglas	
Robertson, Ivan	
Sutcliffe, Christopher	

Instructions.

1. Votes shall be recorded by placing a mark on the ballot paper opposite the names of the candidates for whom the elector wishes to vote and the declaration on the back of the form shall be signed by the elector.

2. Not more than one vote may be given to a candidate.

3. Votes may not be given to more candidates than there are members to be elected.

(Form of back of ballot paper.)

I hereby declare that I have not voted before at the present election in the European Constituency.

.....

Signature of elector.

Address.....

FORM XII.

Bengal Legislative Council Election.

[Rule 42(*1*).]

The European Constituency.

Poll on

To

The Returning Officer,

The European Constituency.

No. (*Address*).

FORM XIII.

Form of Letter of Intimation.

[Rule 42(*1*).]

The European Constituency.

SIR,

The persons whose names are printed on the ballot paper sent herewith have been nominated as candidates for the Legislative Council. Should you desire to vote at this election, I have to request that you will—

(*a*) record your vote by placing a mark on the ballot paper opposite the names of the candidates for whom you wish to vote ;

(*b*) give not more than one vote to a candidate ;

(*c*) sign the declaration on the back of the ballot paper ;

(*d*) place the ballot paper in the smaller envelope and close it up ; and

(*e*) enclose the smaller envelope in the cover addressed to me and return it to me by prepaid post or by messenger so as to reach me before 5 p.m. on the day of 19 .

2. The date appointed for the counting of votes is the.....day of..... 19 .

3. Covers returned by post on which the postage has not been prepaid will not be received by me.

4. Rule 52(2) of the Bengal Legislative Council Electoral (Conduct of Elections) Rules, 1936, provides that any ballot paper which is not duly marked, or on which more than one mark is placed against any candidate's name, or on which votes are given to more candidates than there are members to be elected, or on which a mark is placed in such a manner as to make it doubtful to which candidate it has been given, or the declaration on the back of which has not been duly signed, shall be invalid.

Address. *Returning Officer.*

Date.

FORM XIV.

Form of Ballot Paper.

(Rule 69.)

Election by the members of the Bengal Legislative Assembly, 193 .

Counterfoil.

Serial number . .

Names of candidates.	Mark order of preference in spaces below.

Instructions.

1. Vote by placing the figure 1 in the space opposite the name of the candidate whom you choose for your first preference. Though there are more members than one to be elected only place the figure 1 opposite the name of one candidate.

2. As regards the other candidates you may indicate your preference by putting in the spaces opposite their names the figure of the order in which you would classify them, i.e., 2, 3, 4, etc. You may show your preference in this way irrespective of the number of members to be elected.

3. Do not place more than one figure opposite the name of any candidate.

Back of ballot paper

Serial No.

SCHEDULE I.

[Rules 4 (4) and 59 (3).]

Bengal Legislative Council.

Nomination Paper.

(*a*) Name of the constituency for which the candidate is nominated .. .. ..

Name of candidate .. .. ..

$\frac{\text{Father's}}{\text{*Husband's}}$ name .. .. ..

Age .. .. ..

Sex .. ..

Address .. .. ..

Denomination (state whether Muhammadan, European, or belongs to General Community) ..

Constituency on the electoral roll of which the name of the candidate is included ..

†Number of the candidate in the electoral roll of the constituency in which his name is included

(*b*) Date and number of the page of the Gazette in which the name of the candidate was published as elected to the Bengal Legislative Assembly .. ..

Name of proposer .. .. ..

(*a*)† Number of the proposer in the electoral roll of the constituency .. ..

(*c*) Date and number of the page of the Gazette in which the name of the proposer was published as elected to the Bengal Legislative Assembly .. .. ..

Signature of the proposer .. ..

Name of the seconder .. .. ..

(*a*)† Number of the seconder in the electoral roll of the constituency .. ..

(*c*) Date and number of the page of the Gazette in which the name of the seconder was published as elected to the Bengal Legislative Assembly .. .. ..

Signature of the seconder .. ..

Declaration by candidate.

I hereby declare that I agree to this nomination.

Date..... *Signature of candidate.*

(*N.B.*—This nomination paper will not be valid unless it is delivered to the Returning Officer, or other person authorised to receive it, at his office before 3 p.m. on.....19.....).

*To be filled in only if the candidate is a married woman or a widow.

(*a*) This entry need not be filled in the case of a candidate for election by the members of the Bengal Legislative Assembly.

(*b*) Strike out in the case where the name of the candidate is included in the electoral roll of a territorial constituency of the Bengal Legislative Council.

(*c*) This entry need not be filled in the case of a candidate for a territorial constituency.

†Where the electoral roll is subdivided and separate serial numbers are assigned to the electors entered in each subdivision, a description of the subdivision in which the name of the person concerned is entered must also be given here.

(To be filled in by the Returning Officer or other authorised person.)

Certificate of delivery

Serial No.

This nomination paper was delivered to me at my office, at (date and hour).....by the candidate/proposer/seconder/person authorised.

Returning Officer or other authorised person.

Certificate of Scrutiny.

I have scrutinised the eligibility of the candidate, the proposer and seconder, and find that they are respectively qualified to stand for election, to propose and to second the nomination.

Returning Officer or other authorised person.

††I hereby declare that I have appointed (name).....
.....(address).....to be my election agent.

(Signature).

---

††A candidate may appoint himself as his election agent.

SCHEDULE II.

Custody and preservation of election papers.

(Rule 88.)

Description of the election paper.	Custody.	Period for which to be kept.
1. Nomination papers of candidates. 2. Withdrawals from candidature. 3. Appointment letters of agents of candidates; and revocations of the appointments of agents. 4. Lists of candidates nominated. 5. Lists of ballot papers attested.	(*a*) In the Calcutta (General) and Calcutta Suburbs (General) constituencies, the Calcutta and Suburbs (Muhammadan) constituency and the European constituency—in the office of the Commissioner of the Presidency Division. (*b*) In any other territorial constituency—in the office of the Commissioner of the Division in which the election has been held.	Until the termination of the next election for the constituencies.
6. Orders by Returning Officers regarding the division of constituencies into polling areas and appointments of polling stations for such areas under rule 10.	Ditto ..	

No. 7432A.R.—5th September 1936.—In exercise of the powers conferred by paragraph 20 of the Fifth Schedule to the Government of India Act, 1935, read with sub-paragraph (5) of paragraph 3 of Part I and paragraph 6 of Part III of the Government of India (Provincial Elections) (Corrupt Practices and Election Petitions) Order, 1936, and of all other powers enabling him in that behalf, the Governor of Bengal in Council is hereby pleased to make the following rules with respect to the expenses of candidates at elections and the decision of doubts and disputes arising out of or in connection with elections:—

The Bengal Legislative Assembly and the Bengal Legislative Council Electoral (Election Expenses and Election Petitions) Rules, 1936.

Preliminary.

Short Title.

1. These rules may be called the Bengal Legislative Assembly and the Bengal Legislative Council Electoral (Election Expenses and Election Petitions) Rules, 1936.

Definitions.

2. In these rules, unless there is anything repugnant in the subject or context,—

(*a*) "the Act" means the Government of India Act, 1935;

(*b*) "an election agent" means the person appointed under the Bengal Legislative Assembly Electoral (Conduct of Elections) Rules, 1936, or the Bengal Legislative Council Electoral (Conduct of Elections) Rules, 1936, as the case may be, by a candidate as his agent for an election;

(*c*) "Gazette" means the *Calcutta Gazette;*

(*d*) "the Order" means the Government of India (Provincial Elections) (Corrupt Practices and Election Petitions) Order, 1936; and

(*e*) the expression "Returning Officer"—

(*i*) in relation to an election to fill a seat or seats in the Bengal Legislative Assembly has the same meaning as the meaning assigned to the said expression in the Bengal Legislative Assembly Electoral (Preparation, Revision and Publication of Electoral Rolls) Rules, 1936, and includes any person when performing any duty or function which such person is authorised to perform under sub-rule (1) of rule 4 of the said rules,

(*ii*) in relation to an election by the members of the Bengal Legislative Assembly to fill seats in the Bengal Legislative Council means the person nominated as such Returning Officer by the Governor in his discretion under paragraph 20 of Part I of the Government of India (Provincial Legislative Councils) Order, 1936, and includes any person when performing any duty or function which such person is authorised to perform under sub-rule (2) of rule 57 of the Bengal Legislative Council Electoral (Conduct of Elections) Rules, 1936; and

(*iii*) in relation to any other election to fill a seat or seats in the Bengal Legislative Council has the same meaning as the meaning assigned to the said expression in the Bengal Legislative Council Electoral (Preparation, Revision and Publication of Electoral Rolls) Rules, 1936, and includes any person when performing any duty or function which such person is authorised to perform under sub-rule (1) of rule 4 of the said rules.

Part I.—Election Agents and Expenses.

Election agents and expenses in primary elections.

3. The provisions of Part II of the Order shall apply to a primary election held for the purpose of electing candidates for a seat or seats reserved in a general constituency of the Bengal Legislative Assembly for members of the Scheduled Castes or of constituting an electoral college for the Railway Trade Union constituency of that Assembly.

Election agents and expenses in an election by the members of the Bengal Legislative Assembly.

4. The provisions of Part II of the Order shall also apply to an election by the members of the Bengal Legislative Assembly to fill seats in the Bengal Legislative Council.

Disqualifications for being an agent in connection with an election.

5. No person who is for the time being disqualified under the provisions of Part IV of the Order from being a member of a Provincial Legislature or from voting at elections, shall so long as the disqualification exists, be employed by or on behalf of a candidate as an agent in connection with any election, including a primary election, held under the Act or any Order or rule made thereunder or an Act of the Provincial Legislature.

Accounts of agents.

6. The books of account to be kept by an election agent under paragraph 4 of Part II of the Order, shall contain a statement of all payments made by the candidate or by his election agent or by any person on behalf of the candidate or in his interests for expenses incurred on account of, or in respect of, the conduct and management of the election, and further, a statement of all unpaid claims in respect of such expenses of which he or his election agent is aware.

Return of election expenses.

7. (1) The return of election expenses under Part II of the Order shall be lodged with the Returning Officer within thirty-five days from, in the case of a member of the Scheduled Castes who has been nominated as a candidate for a primary election in a general constituency of the Bengal Legislative Assembly or in the case of a person who has been nominated as a candidate for a primary election to choose an electoral college in the Railway Trade Union constituency of that Assembly, the date of the publication of the results of the final election in the constituency concerned under sub-rule (7) of rule 8 of the Bengal Legislative Assembly Electoral (Conduct of Elections) Rules, 1936, and in the case of an election by the members of the Bengal Legislative Assembly to fill seats in the Bengal Legislative Council, the date

of the publication of the result of such election under rule 81 of the Bengal Legislative Council Electoral (Conduct of Elections) Rules, 1936, and in other cases, the date of the publication of the result of the election in the constituency concerned under sub-rule (7) of rule 8 referred to above or under sub-rule (7) of rule 8 of the Bengal Legislative Council Electoral (Conduct of Elections) Rules, 1936, as the case may be.

(2) Every such return shall be in form I annexed to these rules and contain the particulars specified in Schedule I hereto annexed, and the declarations referred to in sub-paragraph (2) of paragraph 5 of Part II of the Order shall be in the forms contained in paragraph 3 of the said Schedule.

(3) The declaration to be made under sub-paragraph (3) of paragraph 5 of Part II of the Order by a candidate who owing to absence from India was unable to sign the return of election expenses and to make the required declaration shall be in the special form contained in paragraph 4 of the said Schedule.

(4) Every such return shall also bear non-judicial stamps of the value of two rupees without which the Returning Officer shall not accept the return.

Signature by a candidate or an election agent who is unable to write his name in certain cases.

8. For the purpose of paragraph 3 of Part II of the Order a candidate, who is unable to write his name, shall be deemed to have signed a revocation of the appointment of an election agent, and for the purpose of paragraph 5 of the said Part a candidate or an election agent, who is unable to write his name, shall be deemed to have signed a return of election expenses, if he has placed a mark on the document in the presence of the Returning Officer and if the Returning Officer, on being satisfied as to his identity, has attested the mark as being the mark of the candidate or the election agent.

Notice that return of election expenses has been lodged and inspection and copy of such return.

9. When any return and the declarations made in respect thereof including in the case of a candidate, who owing to absence from India was unable to sign the return and to make the required declaration, the declaration made under sub-paragraph (3) of paragraph 5 of Part II of the Order have all been lodged with the Returning Officer, the Returning Officer shall, as soon as may be, cause a notice of the date or dates on which the return and declarations in question have been lodged, and of the time and place at which they can be inspected, to be fixed in some conspicuous place in his office and to be published in the Gazette, and any person shall, on payment of a fee of one rupee, be entitled to inspect any such return or declaration and, on payment of a fee of Rs. 2 for each copy, to obtain attested copies thereof or of any part thereof.

Maintenance of records regarding elections and election expenses.

10. (1) The Governor shall cause to be prepared in such manner as he may direct a record showing—

(*a*) the names of all candidates at every election to fill a seat or seats either in the Bengal Legislative Assembly or in the Bengal Legislative Council,

(*b*) the names of the election agents of each such candidate,

(*c*) the date of each election,

(*d*) the name of each constituency in which an election has been held, and

(*e*) the date on which the return of election expenses of each candidate in each such election has been lodged with the Returning Officer.

(2) The particulars required for the maintenance of the record mentioned above shall be furnished by the Returning Officers concerned.

(3) The record shall be open to inspection by the public.

(4) The record of each election shall be maintained for six years from the date of such election.

(5) Separate records shall be maintained for general elections and bye-elections.

Part II.—The decision of doubts and disputes as to the validity of a primary election in the case of members of the Scheduled Castes.

Special provisions for decision of doubts and disputes in primary elections in the case of scheduled castes candidates.

11. The provisions of Part III of the Order shall apply to decision of doubts and disputes as to the validity of a primary election subject to the provisions contained in this Part.

Definitions.

12. In this Part, unless there is anything repugnant in the subject or context,—

(*a*) "primary election" means a primary election held for the purpose of selecting candidates for a seat or seats reserved in a general constituency of the Bengal Legislative Assembly for members of the Scheduled Castes;

(*b*) "candidate" means a person who has been nominated as a candidate for a primary election or who claims that he has been so nominated or that his nomination has been improperly refused;

(*c*) "elected candidate" means a candidate who has been declared as duly elected at a primary election under sub-rule (2) of rule 12 or under sub-rule (2) of rule 13 of the Bengal Legislative Assembly Electoral (Conduct of Elections) Rules, 1936;

(*d*) "corrupt practice" means one of the practices specified in the First Schedule to the Order; and

(*e*) "agent" includes an election agent and any person who, on the trial of an election petition, is held by the District Magistrate or the Commissioner of a Division under this Part to have acted as an agent in connection with a primary election with the knowledge or consent of the candidate.

The election petition.

13. No primary election shall be called in question except by an election petition presented in accordance with the provisions of this Part.

Election petition when and by whom to be presented.

14. An election petition may be presented against an elected candidate by any candidate who has not been declared elected at a primary election within two days from the date on which the list of candidates elected at the primary election has been affixed by the Returning Officer in his office under sub-rule (5) of rule 13 of the Bengal Legislative Assembly Electoral (Conduct of Elections) Rules, 1936, on the ground of any illegality or irregularity in procedure or on the ground that a corrupt practice has been committed at the primary election.

Election petition to whom to be presented.

15. (1) An election petition shall be presented by the person making the petition or by a person authorised in writing in this behalf by the person making the petition—

(*a*) in the case where a constituency in which the primary election has been held comprises a district or part of a district to the Magistrate of that district or the person authorised in writing by such Magistrate in this behalf, and

(*b*) in the case where a constituency in which the primary election has been held comprises a single division or part of a division extending over more than one district, to the Commissioner of that Division or the person authorised in writing by such Commissioner in this behalf.

(2) When the last day of the period for the presentation of an election petition under this rule is a public holiday within the meaning of section 25 of the Negotiable Instruments Act, 1881, or has been notified by the Governor as a day to be observed as a holiday in district and divisional offices, the petition shall be considered as having been received in due time if it is presented on the next succeeding day which is neither such a public holiday nor a day so notified.

XXVI of 1881.

Contents of the petition.

16. (1) The petition shall contain a statement in concise form of the material facts on which the petitioner relies and shall be signed by the petitioner and verified in the manner laid down in the Code of Civil Procedure, 1908, for the verification of pleadings.

Act V of 1908.

(2) The petition shall be accompanied by a list signed and verified in like manner setting forth full particulars of any corrupt practice which the petitioner alleges, including as full a statement as possible as to the names of the parties alleged to have committed any corrupt practice and the date and place of the commission of each such practice.

(3) The petitioner may, if he so desires, in addition to calling in question the election of the elected candidate, claim a declaration that he himself has been duly elected; in which case he shall join as respondents to his petition all other candidates who were nominated at the primary election.

Deposit of security.

17. At the time of presentation of the petition, the petitioner shall enclose with the petition a Government treasury receipt (chalan) showing that a deposit of two hundred and fifty rupees has been made in the Treasury as security for the costs of the petition.

Time of completion of the inquiry.

18. All inquiries regarding election petitions presented under rule 15 including delivery of judgment shall be completed by a District Magistrate or a Commissioner within seven days from the date of presentation of the petition.

Inquiry by the District Magistrate or the Commissioner.

19. (1) If the provisions of rule 14, rule 15, rule 16 or rule 17 are not complied with, the District Magistrate or the Commissioner, as the case may be, shall dismiss the petition.

(2) If the petition is not dismissed under sub-rule (1), the District Magistrate or the Commissioner, as the case may be, shall after giving notice to the respondents, hold a summary inquiry at such place and on such a date as may be fixed by him.

(3) Subject to the other provisions of this Part every election petition shall be inquired into by the District Magistrate or the Commissioner as nearly as may be in accordance with the procedure applicable under the Code of Criminal Procedure, 1898, to summary trials and in recording evidence he shall follow the procedure laid down in the said Code for summary trials in appealable cases.

Act V of 1898.

Withdrawal of petition.

20. (1) An election petition may be withdrawn by leave of the District Magistrate or the Commissioner, as the case may be, and if there are more petitioners than one, no application to withdraw a petition shall be made, except with the consent of all the petitioners.

(2) If the application for withdrawal of a petition is granted, the petitioner shall be ordered to pay the costs of the respondent theretofore incurred or such portion thereof as the District Magistrate or the Commissioner, as the case may be, may think fit.

Abatement of petition.

21. An election petition shall abate on the death of a sole petitioner or of the survivor of several petitioners.

Grounds for declaring election void.

22. (1) Subject to the provisions of this rule, if in the opinion of the District Magistrate or the Commissioner, as the case may be,—

(*a*) the primary election of an elected candidate has been procured or induced, or the result of the primary election has been materially affected, by any corrupt practice, or

(*b*) the result of the primary election has been materially affected by the improper acceptance or rejection of any nomination, or by reason of the fact that any person nominated was not qualified or was disqualified for election, or by the improper reception or refusal of a vote, or by the reception of any vote which is void, or by any non-compliance with the provisions of the Act or any of these rules or of any Order or other rule made under the Act or of an Act of the Provincial Legislature relating to the election, or by any mistake in the use of any prescribed form; or

(*c*) any corrupt practice specified in Part I of the First Schedule to the Order has been committed in the interests of an elected candidate; or

(*d*) the election has not been a free election by reason of the large number of cases in which undue influence or bribery within the meaning of Part I or Part II of the First Schedule to the Order has been exercised or committed,

the primary election of the elected candidate shall be void.

(2) If the District Magistrate or the Commissioner, as the case may be, finds that an elected candidate has been guilty by an agent, other than his election agent, of any corrupt practice specified in Part I of the First Schedule to the Order, but further finds that the candidate has satisfied him that—

(*a*) no corrupt practice was committed at the primary election by the candidate or his election agent, and the corrupt practices found to have been committed were committed contrary to the orders, and without the sanction or connivance, of the candidate or his election agent;

(*b*) the candidate and his election agent took all reasonable means for preventing the commission of corrupt practices at the primary election;

(*c*) the corrupt practices found to have been committed were of a trivial and limited character or took the form of customary hospitality which did not affect the result of the primary election; and

(*d*) in all other respects the primary election was free from any corrupt practice on the part of the candidate or any of his agents,

then the District Magistrate or the Commissioner, as the case may be, may hold that the primary election of the elected candidate is not void.

(3) If a person (not being entitled so to do) votes more than once at the same primary election, all his votes shall be deemed for the purposes of this rule to be void.

Judgment of the inquiry.

23. (1) At the conclusion of the inquiry the District Magistrate or the Commissioner, as the case may be, shall deliver judgment in writing within the time mentioned in rule 18 and such decision of the District Magistrate or the Commissioner shall be final.

(2) In the judgment delivered under sub-rule (1) the District Magistrate or the Commissioner shall record a finding as to whether all the elected candidates have been duly elected and in the case where the petitioner has claimed a declaration that he himself has been duly elected, whether the petitioner has been so elected. He shall, further record a finding of the total amount of costs which are payable and the judgment shall state the persons by and to whom such cost should be paid.

(3) The District Magistrate or the Commissioner, as the case may be, on delivery of judgment under sub-rule (1) shall forthwith forward one copy of the judgment to the Governor and another copy to the Returning Officer.

(4) The Returning Officer on receipt of the copy of the judgment shall amend the list prepared by him under sub-rule (5) of rule 13 of the Bengal Legislative Assembly Electoral (Conduct of Elections) Rules, 1936, if necessary, and cause the amended list to be affixed again in the manner provided in the said sub-rule:

Provided that in the case where the District Magistrate or the Commissioner records a finding that the election of all the elected candidates is void and no other party to the petition is entitled to be declared elected then the Returning Officer shall bring the fact to the notice of the Governor to enable the Governor exercising his individual judgment to take necessary action for the holding of a fresh primary election under the said rules.

Finding as to corrupt practices and persons guilty thereof.

24. Where any charge is made in an election petition of any corrupt practice, the District Magistrate or the Commissioner, as the case may be, shall record in his judgment—

(*a*) a finding whether a corrupt practice has or has not been proved to have been committed by any candidate or his agent or with the connivance of any candidate or his agent, and the nature of such corrupt practice; and

(*b*) the names of all persons (if any) who have been proved at the inquiry to have been guilty of any corrupt practice and the nature of that practice with any such recommendation as the District Magistrate or the Commissioner may think proper to make for the exemption of any such persons from any disqualifications for voting which they may have incurred in this connection under Part IV of the Order:

Provided that no person shall be so named in the judgment without giving such person a hearing as to why his name should not be so recorded.

Part III.—The decision of doubts and disputes as to the validity of an election.

Definitions.

25. In this Part, unless there is anything repugnant in the subject or context,—

(*a*) "candidate," "electoral right," "returned candidate" and "corrupt practices" have the same meanings as in paragraph 1 of Part III of the Order;

(*b*) "Commissioners" means Commissioners appointed under paragraph 4 of Part III of the Order for the trial of an election petition and "President" means the President of a Commission appointed under the said paragraph.

Presentation of the petition.

26. (1) An election petition against any returned candidate may be presented to the Governor under Part III of the Order—

(*a*) by any candidate or elector within 14 days from the date of the publication of the notice in the Gazette under rule 9 that the return of election expenses of the

returned candidate and the declarations made in respect thereof have been lodged with the Returning Officer; or

(*b*) within 30 days from that date by an officer referred to in clause (*b*) of sub-paragraph (*1*) of paragraph 3 of Part III of the Order.

(2) An election petition shall be deemed to have been presented to the Governor when it is delivered to the Governor or to any officer appointed by him in this behalf—

(*a*) by the person making the petition; or

(*b*) by a person authorised in writing in this behalf by the person making the petition; or

(*c*) by registered post.

(3) When the last day of the period for the presentation of an election petition under this rule is a public holiday within the meaning of section 25 of the Negotiable Instruments Act, 1881, or has been notified by the Governor as a day to be observed as a holiday in Government offices, the petition shall be considered as having been received in due time if it is presented on the next succeeding day which is neither such a public holiday nor a day so notified. XXVI of 1881.

27. (1) The petition shall contain a statement in concise form of the material facts on which the petitioner relies and shall, where necessary, be divided into paragraphs numbered consecutively. It shall be signed by the petitioner and verified in the manner laid down in the Code of Civil Procedure, 1908, for the verification of pleadings. Contents of the petition. Act V of 1908.

(2) The petition shall be accompanied by a list signed and verified in like manner setting forth full particulars of any corrupt practice which the petitioner alleges, including as full a statement as possible as to the names of the parties alleged to have committed any corrupt practice and the date and place of the commission of each such practice.

(3) The Commissioners may, upon such terms as to costs and otherwise as they may direct at any time, allow the particulars included in the said list to be amended or order such further and better particulars in regard to any matter referred to therein to be furnished as may in their opinion be necessary for the purpose of ensuring a fair and effectual trial of the petition.

28. When the petitioner in addition to calling in question the election of a returned candidate, claims a declaration that he himself has been duly elected, he shall join as respondents to his petition all other candidates who were nominated at the election. Against whom it may be presented.

Deposit of security.

29. At the time of presentation of the petition, the petitioner shall, except where the petition is presented under clause (*b*) of sub-rule (1) of rule 26, enclose with the petition a Government Treasury receipt (chalan) showing that a deposit of one thousand rupees has been made by him in the Treasury as security for the costs of the petition.

Petition when to be dismissed.

30. (1) If the provisions of rule 26, rule 27 or rule 29 are not complied with, the Governor exercising his individual judgment shall dismiss the petition.

(2) If the petition is not dismissed under sub-rule (1), the President shall, as soon as may be after he is appointed, cause a copy of the petition to be served on each respondent and to be published in the Gazette, and may call on the petitioner to execute a bond in such amount and with such sureties as he may require for the payment of any further costs. At any time within fourteen days after such publication, any other candidate shall be entitled to be joined as a respondent on giving security in a like amount and procuring the execution of a like bond:

Provided that the execution of such a bond by the petitioner shall not be required in any case where the petition has been presented under clause (*b*) of sub-rule (1) of rule 26.

Inquiry by Commissioners.

Act V of 1908.

31. Subject to the provisions of the Order and to the other provisions of these rules, every election petition shall be inquired into by the Commissioners, as nearly as may be, in accordance with the procedure applicable under the Code of Civil Procedure, 1908, to the trial of suits:

Provided that it shall only be necessary for the Commissioners to make a memorandum of the substance of the evidence of any witness examined by them.

Place of inquiry.

32. The inquiry shall be held at such place as the Governor may appoint:

Provided that the Commissioners may in their discretion sit at any other place in the province for any part of the inquiry, and may depute any one of their number to take evidence at any place in the province.

Withdrawal of petition.

33. (1) An election petition may be withdrawn only by leave of the Commissioners or, if an application for withdrawal is made before any Commissioner has been appointed, of the Governor exercising his individual judgment.

(2) If there are more petitioners than one, no application to withdraw a petition shall be made, except with the consent of all the petitioners.

(3) When an application for withdrawal is made to the Commissioners notice thereof fixing a date for the hearing of the application shall be given to all other parties to the petition and shall be published in the Gazette.

(4) No application for withdrawal shall be granted if, in the opinion of the Governor exercising his individual judgment or of the Commissioners, as the case may be, such application has been induced by any bargain or consideration which ought not to be allowed.

(5) If the application is granted—

(*a*) the petitioner shall, where the application has been made to the Commissioners, be ordered to pay the costs of the respondent theretofore incurred or such portion thereof as the Commissioners may think fit;

(*b*) notice of the withdrawal shall be published in the Gazette by the Governor exercising his individual judgment or by the Commissioners, as the case may be; and

(*c*) any person who might himself have been a petitioner may, within fourteen days of such publication, apply to be substituted as petitioner in place of the party withdrawing, and, upon compliance with the conditions of rule 29 as to security, shall be entitled to be so substituted and to continue the proceedings upon such terms as the Commissioners may think fit.

(6) When an application for withdrawal is granted by the Commissioners and no person has been substituted as petitioner in place of the party withdrawing under clause (*c*) of sub-rule (5) the Commissioners shall report the fact to the Governor.

Abatement or substitution on death of petitioner.

34. (1) An election petition shall abate only on the death of a sole petitioner or of the survivor of several petitioners:

Provided that, where such sole petitioner was an officer empowered under clause (*b*) of sub-paragraph (1) of paragraph 3 of Part III of the Order the proceedings may be continued by any other officer empowered in this behalf by the Governor exercising his individual judgment under the said clause.

(2) Notice of the abatement of an election petition shall be published in the Gazette by the Commissioners or, if the petition abates before any Commissioner has been appointed, by the Governor.

(3) Any person who might himself have been a petitioner may, within fourteen days of such publication, apply to be substituted as petitioner, and upon compliance with the conditions of rule 29 as to security, shall be entitled to be so substituted and to continue the proceedings upon such terms as the Commissioners may think fit.

Abatement or substitution on death of respondent.

35. If before the conclusion of the trial of an election petition the respondent dies or gives notice that he does not intend to oppose the petition, the Commissioners shall cause notice of such event to be published in the Gazette, and thereupon any person who might have been a petitioner may, within fourteen days of such publication, apply to be substituted for such respondent to oppose the petition, and shall be entitled to continue the proceedings upon such terms as the Commissioners may think fit.

Recrimination when seat claimed.

36. (1) Where at an inquiry into an election petition any candidate, other than the returned candidate, claims the seat for himself, the returned candidate or any other party may give evidence to prove that the election of such candidate would have been void if he had been the returned candidate and a petition had been presented complaining of his election:

Provided that the returned candidate or such other party as aforesaid shall not be entitled to give such evidence unless he has, within fourteen days from the date of the publication of the election petition under sub-rule (2) of rule 30, given notice of his intention to the Commissioners and made the deposit and procured the execution of the bond referred to in rules 29 and 30, respectively.

(2) Every notice referred to in sub-rule (1) shall be accompanied by the statement and list of particulars required by rule 27 in the case of an election petition and shall be signed and verified in like manner.

Part IV.—Custody and preservation of election papers.

Custody and preservation of certain election papers.

37. (1) The papers mentioned in the first column of Schedule II hereto annexed shall be kept in the custody mentioned in the second column thereof for the period specified in the third column thereof, unless their retention for a longer period is otherwise ordered by competent authority.

(2) The public shall have a right to inspect the election papers mentioned in Schedule II and to get attested copies thereof on payment of the fees laid down in the Bengal Records Manual, 1917, and in the rules for the management of the Secretariat Record Room. As an exception to this rule returns of election expenses shall be available for inspection at the offices of the Returning Officers of the constituency concerned and copies of such returns shall be furnished on payment of the fees laid down in rule 9.

Part V.—Special provision.

Interpretation in case of doubt.

38. If any question arises as to the interpretation of these rules otherwise than in connection with an election inquiry held under these rules or under the Act or any Order or other rule made thereunder, or under an Act of the Provincial Legislature, the question shall be referred for the decision of the Governor exercising his individual judgment, and his decision shall be final.

FORM I.

Form of Return of Election Expenses.

[Rule 7(2).]

Bengal Legislative Assembly/Council.

....*Constituency*

Election by the members of the Bengal Legislative Assembly to fill seats in the Bengal Legislative Council.

1. *Receipts.*—Including all monies, securities and equivalents of money received from any person (including the candidate himself), club, society, or association in respect of any expenses, whether paid or remaining unpaid, incurred on account of, or in connection with, or incidental to the election. The name of each such person, etc., and the amount received shall be shown separately :—

Date of receipt.	Name and description of payer.	Amount or value.
	Total ..	

2. *Expenses.*—Including all payments made by the candidate or by his election agent or by any person on behalf of, or in the interests, of the candidate in respect of any expenses incurred on account of or in connection with or incidental to the election, and all unpaid claims in respect of any such expenses of which the candidate or his election agent is aware :—

N.B.—(1) Vouchers shall be attached to the return for all items of expenditure amounting to Rs. 5 and over, unless from the nature of the case a receipt cannot be obtained ; the vouchers shall be numbered and arranged in serial order and the number of the vouchers entered in the return against the item of expenditure.

(2) Each payment made shall be entered separately, except payments on account of postage and telegrams for which lump sums may be shown. The name and description of each person paid and the work done or the nature of the goods supplied shall be shown in respect of each payment.

Part A.—*In this Part shall be shown the personal expenditure of the candidate, incurred or paid by him or by his election agent on his behalf, including all payments for personal services rendered, for hotel bills, for travelling expenses and for the purchase of books or election literature.*

Name and description of payee.	On what account.	Date of payment.	Voucher No.	Amount paid.	Amount unpaid.
				Total ..	

Part B.—*In this part shall be shown expenditure incurred by the candidate or his election agent for the remuneration of agents (including the election agent), clerks or messengers. The name and description of each agent, clerk or messenger employed and the rate of remuneration and the amount paid to each shall be shown separately.*

Name and description of payee.	On what account.	Rate of payment.	Date of Payment.	Voucher No.	Amount paid.	Amount remaining unpaid.
				Total ..		

Part C.—*In this part shall be shown all other expenditure (including travelling expenses and cost of refreshments provided) incurred by the candidate or his election agent on account of agents (including the election agent), clerks or messengers. The name and description of each agent, clerk or messenger and the amount paid to each shall be shown.*

Name and description of payee.	On what account.	Date of payment.	Voucher No.	Amount paid.	Amount remaining unpaid.
			Total ..		

Part D.—*In this Part shall be shown the travelling expenses of persons (not being agents, clerks or messengers) whether in receipt of salary or not, incurred or paid by the candidate, his election agent or the person so travelling.*

Name and description of payee.	On what account.	Date of payment.	Voucher No.	Amount paid.	Amount remaining unpaid.
			Total ..		

Part E.—*In this Part the cost of printing shall be shown.*

Name and description of payee.	On what account.	Date of payment, if any.	Voucher No.	Amount paid.	Amount unpaid.
			Total ..		

Part F.—*In this Part the cost of advertising shall be shown.*

Name and description of payee.	On what account.	Date of payment, if any.	Voucher No.	Amount paid.	Amount unpaid.
			Total ..		

Part G.—*In this Part the cost of stationery shall be shown.*

Name and description of payee.	On what account.	Date of payment, if any.	Voucher No.	Amount paid.	Amount unpaid.
			Total ..		

Part H.—*In this Part the cost of postage and telegrams may be shown in lump sums.*

Expenditure incurred.	Date of payment, if separate payments are shown.	Amount paid.
	Total ..	

Part I.—*In this Part the cost of rooms hired for public meetings or as committee rooms or as an office shall be shown.*

Name and description of payee.	Locality and description of rooms.	Date of payment.	Voucher No.	Amount paid.	Amount unpaid.
			Total ..		

Part J.—*In this Part shall be included every disputed claim remaining unpaid.*

Name and description of claimant.	Nature and alleged ground of claim.	Amount of claim.
	Total ..	

Part K.—*In this Part all expenditure incurred and payments made by the candidate or by his election agent or by any person on behalf of or in the interest of the candidate in connection with the election and not included in any of the foregoing parts shall be shown.*

Name and description of payee.	On what account.	Date of payment, if any.	Voucher No.	Amount paid.	Amount unpaid.
			Total ..		

Part L.—*In this Part the total expenditure incurred under each of the previous parts shall be shown.*

Part.	Paid.	Unpaid.	Total.
A			
B			
C			
D			
E			
F			
G			
H			
I			
J			
K			
Total ..			

Signature of the candidate.

Signature of the election agent of the candidate.

SCHEDULE I.

(Rule 7.)

Return of Election Expenses.

1. Under the head of receipts there shall be shown the name and description of every person (including the candidate), club, society or association from whom any money, security or equivalent of money was received in respect of expenses incurred on account of, or in connection with, or incidental to, the election, and the amount received from each person, club, society or association separately.

2. Under the head of expenditure there shall be shown—

(*a*) the personal expenditure of the candidate incurred or paid by him or his election agent, including travelling and all other personal expenses incurred in connection with his candidature;

(*b*) the name, and the rate and total amount of the pay, of each person employed as an agent (including the election agent), clerk or messenger;

(*c*) the travelling expenses and any other expenses incurred by the candidate or his election agent on account of agents (including the election agent), clerks or messengers;

(*d*) the travelling expenses of persons, whether in receipt of salary or not, incurred, in connection with the candidature, and whether paid or incurred by the candidate, his election agent or the persons so travelling;

(*e*) the cost whether paid or incurred of—

(*i*) printing,

(*ii*) advertising,

(*iii*) stationery,

(*iv*) postage,

(*v*) telegrams, and

(*vi*) rooms hired either for public meetings or as committee rooms,

(*f*) any other miscellaneous expenses whether paid or incurred.

Note.—(1) All expenses incurred in connection with the candidature whether paid by the candidate, his election agent or any other person or remaining unpaid on the date of the return are to be set out.

(2) For all items of Rs. 5 and over, unless from the nature of the case (*e.g.*, travel by rail or postage) a receipt is not obtainable, vouchers are to be attached.

(3) All sums paid but for which no receipt is attached are to be set out in detail with dates of payment.

(4) All sums unpaid are to be set out in a separate list.

3. The form of the declarations referred to in sub-paragraph (2) of paragraph 5 of Part II of the Order shall be as follows:—

Form of Declaration by Election Agent.

I,.....being the appointed election agent for....., a candidate for election in the .....constituency/by the members of the Bengal Legislative Assembly to fill seats in the Bengal Legislative Council, do hereby solemnly affirm that the above return of election expenses is true to the best of my knowledge and belief, and that except the expenses herein set forth no expenses of any nature whatsoever have to my knowledge or belief been incurred in, or for the purposes of,.....'s candidature.

Election Agent.

Solemnly affirmed before me.

(*Magistrate.*)

Form of Declaration by Candidate.

I,.....being a candidate for election in the.....constituency/by the members of the Bengal Legislative Assembly to fill seats in the Bengal Legislative Council, do hereby solemnly affirm that the above return of election expenses is true to the best of my knowledge and belief, and that, except the expenses herein set forth, no expenses of any nature whatsoever have to my knowledge or belief been incurred in, or for the purposes of, my candidature.

Candidate.

Solemnly affirmed before me.

(*Magistrate.*)

4. The special form of declaration to be made under sub-paragraph (3) of paragraph 5 of Part II of the Order by a candidate who owing to absence from India was unable to sign the return of election expenses and to make the required declaration shall be as follows:—

Special Form of Declaration by a Candidate under sub-paragraph (3) of paragraph 5 of Part II of the Order.

I,.....being a candidate for election in the .....constituency/by the members of the Bengal Legislative Assembly to fill seats in the Bengal Legislative Council, do hereby solemnly affirm that the return of election expenses signed by my election agent is (with the exceptions noted below) true to the best of my knowledge and belief, and that (with the exceptions noted below) no expenses of any nature whatsoever other than the expenses therein set forth have to my knowledge or belief been incurred in, or for the purposes of, my candidature.

Particulars of Exceptions.

(Sd.).....

(*Candidate.*)

Solemnly affirmed before me.

(Sd.).....

(*Magistrate.*)

SCHEDULE II.

Custody and preservation of election papers.

(Rule 37).

Description of election paper.	Custody.	Period for which to be kept.
1. Election petitions and proceedings and reports of District Magistrates and Commissioners of Divisions thereon.	In the office of the Commissioner of the Division in which the primary election, which is the subject matter of the election petition, has been held.	Six years.
2. Election petitions and proceedings and reports of Election Commissioners thereon.	In the Record Room of the Bengal Secretariat.	Ditto.
3. Returns of election expenses ..	In the offices of the Returning Officers with whom they are lodged.	Ditto.

No. 7577A.R.—5th September 1936.—In exercise of the powers conferred by sub-sections (*1*) and (*2*) of section 68 of the Government of India Act, 1935, read with sub-paragraph (*1*) of paragraph 14 of the Government of India (Commencement and Transitory Provisions) Order, 1936, the Governor of Bengal in Council is hereby pleased to make the following rules, namely:—

1. These rules may be called the Bengal Legislative Assembly and the Bengal Legislative Council (Prohibition of Simultaneous Membership) Rules, 1936.

2. Any person who is chosen a member of both the Chambers of the Legislature of the Province of Bengal, and who has not taken his seat in any of the Chambers, may by notice in writing signed by him and delivered to the Secretaries of both the Chambers, or to any person authorised by the Governor in this behalf, within ten days from the date of publication in the *Calcutta Gazette* of the declarations that he has been so chosen or, if such publications have been made on different dates, within ten days from the later of such dates, as the case may be, intimate in which of the Chambers he wishes to serve, and any choice so intimated shall be conclusive. In default of such intimation, the seat of such person in the Legislative Assembly shall become vacant.

3. (*1*) If a person who is already a member of the Legislative Assembly and has taken his seat in such Assembly is chosen a member of the Legislative Council, his seat in the Assembly shall, on the publication in the *Calcutta Gazette* of the declaration that he has been so chosen, become vacant.

(*2*) If a person who is already a member of the Legislative Council and has taken his seat in such Council is chosen a member of the Legislative Assembly, his seat in the Council shall, on the publication in the *Calcutta Gazette* of the declaration that he has been so chosen, become vacant.

4. The period at the expiration of which the seat in the Provincial Legislature of a person chosen a member of the Federal (or Indian) Legislature and of the Provincial Legislature, including a person who, being a member of the Federal (or Indian) or of the Provincial Legislature, is chosen a member of the Provincial or of the Federal (or Indian) Legislature respectively, shall become vacant, unless he has previously resigned his seat in the Federal (or Indian) Legislature, shall be ten days from the date of the publication in the *Gazette of India* or in the *Calcutta Gazette*, whichever is later, of the declaration that he has been so chosen:

Provided that, in a case in which the declaration that a person, who is a member of the Indian Legislature, has been chosen a member of the Provincial Legislature is published in the *Calcutta Gazette* on any date earlier than the 10th April 1937, the said period shall be the period expiring on the 20th April 1937, or on the date of the first meeting of the Provincial Legislature, whichever is earlier.

R. N. GILCHRIST,
Reforms Commr. and Joint Secy. (ex-officio) to the Govt. of Bengal.

Printed and published by the Superintendent, Government Printing, Bengal Government Press, Alipore, Bengal, on the 5th September 1936.

Registered No. C207

No. 37 of 1936

The Calcutta Gazette

Published by Authority

THURSDAY, SEPTEMBER 10, 1936.

CONTENTS:

	Page.
Part I.—Orders and Notifications by the Governor of Bengal, the Government of Bengal, the High Court, Government Treasury, etc.	2105—2190
Part IA.—Orders and Notifications by the Government of India republished for general information	239—317
Part IB.—Educational Notices ..	1395—1402
Part II.—Advertisements ..	887—940
Part III.—Acts of the Bengal Legislative Council	*Nil*
Part IV.—Bills introduced in the Bengal Legislative Council, Reports of Select Committees presented or to be presented to that Council, and Bills published before introduction in that Council ..	*Nil*
Part V.—Acts of the Indian Legislature assented to by the Governor-General and Ordinances promulgated under section 72 of the Government of India Act ..	*Nil*
Part VI.—Bills introduced in the Council of State and Legislative Assembly, Reports of Select Committees presented to the Council and Assembly and Bills published under rule 18 of the Indian Legislative Rules	*Nil*
Supplement No. 37 :—	
Final Forecast of the Jute Crop, 1936	1197—1242
Weekly Weather and Crop Report - Prices current Weekly Gauge Readings - Corporation of Calcutta Notices - Cotton Ginning and Pressing Weekly Vital Statistics ..	1219—1224

PART I

Orders and Notifications by the Governor of Bengal, the Government of Bengal, the High Court, Government Treasury, etc.

Orders by the Government of Bengal.

No. 10650A.

Appointments and Transfers.

General.

Nadia.—No. 10416A.—19th August 1936.—Maulvi Saiyid Ghulam Kabir, Deputy Magistrate and Deputy Collector, Kushtia, Nadia, is appointed temporarily to have charge of the Kushtia subdivision of that district.

Faridpur-Chittagong.—No. 10296A.—31st August 1936.—Babu Niranjan Mohan Bardhan, Deputy Magistrate and Deputy Collector, Madaripur, Faridpur, is transferred to the headquarters station of the Chittagong district.

Tippera-Chittagong.—No. 10308A. — 31st August 1936.—The orders of the 20th August 1936, transferring Babu Dhirendra Kumar Ghosh, Deputy Magistrate and Deputy Collector, Tippera, to the headquarters station of the Chittagong district, are cancelled.

Hooghly-Tippera. — No. 10394A. — 31st August 1936.—The orders of the 20th August 1936, transferring Babu Bipul Chandra Chatarji, Deputy Magistrate and Deputy Collector, Serampore, Hooghly, to the headquarters station of the Tippera district, are cancelled.

24-Parganas-Dacca Divn.—No. 10367A.—1st September 1936.—Babu Subodh Chandra Das Gupta, Sub-Deputy Collector, 24-Parganas, is transferred to the Dacca Division.

Jessore-Khulna.—No. 10390A.—1st September 1936.—Babu Birendra Kishore Kar, Sub-Deputy Collector, Narail, Jessore, is transferred to the headquarters station of the Khulna district.

The orders of the 28th August 1936 transferring him to the Satkhira subdivision of the Khulna district are cancelled.

Khulna.—No. 10394A.—1st September 1936.—Maulvi Muhammad Ali Sulaimanjah, Deputy Magistrate and Deputy Collector, Khulna, is transferred to the Satkhira subdivision of that district.

Khulna-Mymensingh-24-Parganas. — No. 10491A.—3rd September 1936.—Babu Bishnupada Bhattacharji, Deputy Magistrate and Deputy Collector, Bagerhat, Khulna, is appointed to have charge of the Sadar subdivision of the Mymensingh district.

The orders of the 29th August 1936, appointing him to have charge of the Diamond Harbour subdivision of the 24-Parganas, are cancelled.

Mymensingh-24-Parganas.—No. 10496A.—3rd September 1936.—Maulvi Emdad Ali, Deputy Magistrate and Deputy Collector, Mymensingh, is appointed to have charge of the Diamond Harbour subdivision of the 24-Parganas.

Mymensingh.—No. 10596A.—4th September 1936.—Mr. J. L. Llewellyn, I.C.S., officiating Additional District Magistrate, Mymensingh, is appointed to act as Magistrate and Collector of that district, during the absence, on leave, of Mr. K. G. Murshed, I.C.S., or until further orders.

Nadia-Faridpur—No. 10602A.—4th September 1936.—Babu Gyan Ranjan Mukharji, Sub-Deputy Collector, Nadia, is transferred to the Madaripur subdivision of the Faridpur district.

Confirmation.

POLICE.

No. 10487A.—3rd September 1936.—Mr. Zakir Husain, I.P., is confirmed in the superior scale of the Indian Police with effect from the 13th August 1936.

Leave.

GENERAL.

Midnapore.—No. 10327A.—1st September 1936.—Maulvi Altafur Rahman Khan, Deputy Magistrate and Deputy Collector, Contai, Midnapore, is allowed leave on average pay from the 31st October to the 23rd December 1936, under the proviso to rule 81 (*b*) (*ii*) of the Fundamental Rules.

No. 10329A.—1st September 1936.—Lieutenant J. E. J. Davie, Grenadier Guards, an Aide-de-Camp on the personal staff of His Excellency the Governor of Bengal, is allowed leave for four months, with effect from the 11th September 1936, viz., leave on average pay for one month and twenty-nine days, under rule 100 (*a*) (*i*) of the Fundamental Rules, and furlough under Military Rules for the remaining period.

Jessore.—No. 10404A.—2nd September 1936.—Mr. K. C. Nag, M.B.E., District and Sessions Judge, Jessore, is allowed leave on average pay for seven days, under rules 81 (*b*) (*ii*) and 86 (*b*) of the Fundamental Rules, with effect from the 7th October 1936.

No. 10411A.—2nd September 1936.—Babu Dwarka Nath Das, Sub-Deputy Collector, is allowed leave on half average pay for one month, under rule 81 (*d*) of the Fundamental Rules, in extension of the leave granted to him under the orders of the 25th August 1936.

Mymensingh.—No. 10592A.—4th September 1936.—Mr. K. G. Murshed, I.C.S., officiating Magistrate and Collector, Mymensingh, is allowed leave on half average pay for twenty days, under rule 81(*d*) of the Fundamental Rules, with effect from the 28th September 1936.

No. 10627A.—4th September 1936.—Babu Birendra Nath Maitra, Sub-Deputy Collector, is allowed leave on average pay up to the 17th October 1936, under rule 81 (*b*) (*ii*) of the Fundamental Rules, in extension of the leave granted to him under the orders of the 18th August 1936.

No. 10630A.—4th September 1936.—Mr. A. Whittaker, I.C.S., is allowed leave on average pay for one day, viz., the 17th August 1936, under rule 81(*b*)(*i*) of the Fundamental Rules, in extension of the leave granted to him under the orders of the 2nd April 1936.

POLICE.

Tippera.—No. 10414A.—2nd September 1936.—Mr. J. V. B. Janvrin, I.P., Superintendent of Police, Tippera, was allowed leave on average pay for eighteen days, under rule 81 (*b*) (*i*) of the Fundamental Rules, with effect from the 29th May 1936.

Jessore.—No. 10415A.—2nd September 1936.—Maulvi Saiyid Ali Ahmad, Deputy Superintendent of Police, Jessore, is allowed leave on average pay for fifteen days, under rule 81 (*b*) (*ii*) of the Fundamental Rules, with effect from the 20th September 1936 or any subsequent date on which he may be relieved.

E. N. BLANDY,
Chief Secy. to the Govt. of Bengal (offg.).

NOTIFICATIONS.

No. 10429A.—3rd September 1936.—The following amendments are made in the Departmental Examination Rules (*Reprint* corrected up to 1st June 1936):—

In Appendix II, page 10, *substitute* the following for items Nos. 1 and 2.

1. The Government of India Act, 1935—

Part II, Chapter III.

Part III, Chapters II and III.

2. The Bengal Electoral Orders and Rules (Second Edition, 1936).

In paper No. II, page 56, in Appendix I to Appendix XX, *substitute* the following for item No. 2.

2. The Bengal Electoral Orders and Rules (Second Edition, 1936).

2. These amendments will come into effect from the examination to be held in November 1936.

No. 10516A.—4th September 1936.—The following amendments are made in the Rules for the encouragement of the study of oriental languages published with Appointment Department notification No. 6005A., dated the 18th June 1928:—

(*i*) *Insert* the following as item No. (*ix*) under rule I, viz.:—"Europe-recruited officers of the Bengal Senior Service of Engineers"; and

(*ii*) *Add* the following as a sub-paragraph at the end of the rule, viz.:—"Europe-recruited officers of the Bengal Senior Service of Engineers may qualify as 1st and 2nd class Interpreters in Bengali and earn the prescribed rewards".

No. 10610A.—4th September 1936.—The following amendments are made in the Schedule of posts included in the Bengal General Service constituted under Government notification No. 1665A., dated the 14th February 1936:—

(*a*) item No. 40—*Substitute* for "Consulting Architect, Bengal" the new designation of the post "Government Architect, Bengal;"

(*b*) item No. 41—*Substitute* for "Assistant Architect, Bengal" the new designation of the post "Assistant Government Architect, Bengal"; and

(*c*) item No. 46—*Delete* the post of "Personal Assistant to Chief Engineer" and *insert* the word "Deleted" against this item.

No. 10332A.—2nd September 1936.—In exercise of the powers conferred by rule 44 of the Civil Services (Classification, Control, and Appeal) Rules, 1930, the following rules are hereby made by the Local Government:—

Part I.

1. These rules shall be called the Bengal Subordinate Services (General Recruitment) Rules, 1936.

2. They shall apply to all subordinate services and posts under the Government of Bengal, other than—

(1) Services or posts manned by—

(*i*) persons employed occasionally or subject to discharge at less than one month's notice; or

(*ii*) persons for whose appointment and conditions of employment special provision is made by or under any law for the time being in force;

(2) services or posts which have been excluded from the operation of the Civil Services (Classification, Control and Appeal) Rules by declaration of the Local Government under rule 4 of those rules.

3. All rules and orders issued by the Governor in Council or the Governor acting with his Ministers, as the case may be, to regulate recruitment to particular subordinate services and posts shall be so framed and shall be so interpreted as to be consistent with these rules.

4. For the purpose of these rules—

(1) where there is nothing in the context repugnant thereto "Government" shall mean the local Government as defined in section 134(4) of the Government of India Act, 1919;

(2) the "appointing authority" means the authority having power to fill a post substantively;

(3) "recruitment" means the appointment to a service or post—

(*a*) of a person not already in Government service;

(*b*) of a person in Government service to a service or post which is not included in the cadre of his service or recognised by the local Government to be a post normally filled by persons in his service or post.

5. All first appointments to subordinate services and posts included in the Schedule to the Subordinate Services (Discipline and Appeal) Rules, 1936, shall be made by the authority mentioned in column 2 of that Schedule.

6. All first appointments to subordinate services or posts not included in the Schedule to the Subordinate Services (Discipline and Appeal) Rules, 1936, shall be made by the head of the office in administrative charge of the service or post.

NOTE.—If any doubt arises as to who is the head of the office for the purposes of this rule the matter shall be referred to Government whose decision shall be final.

7. No person shall be appointed to any subordinate service or post who is not of good character, sound health, good physique and active habits and free from organic defect or physical infirmity and in respect of whom the appointing authority is not satisfied that he is physically fit and in all respects suitable for appointment to Government service.

8. Without the previous sanction of the Governor-General in Council, no person shall be appointed to any subordinate service or post who is not a British subject or the subject of a State in India.

9. In special circumstances and for reasons to be recorded in writing and subject to the provisions of Subsidiary Rule 7 of the Fundamental and Subsidiary Rules, a person whose age does not fall within the limits prescribed by any rule or order may be appointed to a subordinate service or post with the specific sanction of the Head of the Department previously obtained.

Part II.

10. To regulate recruitment to any of the subordinate services or posts Government may frame special recruitment rules which shall prescribe the method of recruitment, the age limits, and the physical, educational, and other qualifications required from candidates.

11. Such special rules shall provide:—

A. In the case of subordinate services or posts entered in the Schedule to these rules that—

(*i*) Candidates not already in Government service shall before appointment, be required to attend before a Medical Board or an officer in medical charge of a civil station and submit to a test similar to that prescribed for candidates for a provincial service.

(*ii*) Unless recruitment is made from among persons already in Government service—

(*a*) The number of vacancies shall be publicly notified beforehand, together with instructions for the submission of applications and other particulars for the guidance of candidates.

(*b*) Every candidate must furnish with his application certificates written not more than one year prior to the date of his application from two responsible persons not related to him nor connected with him by marriage, testifying to his private character; these certificates must be in addition to any furnished from persons connected with his college or university.

(*iii*) Recruitment of all candidates whether in Government service or not shall be made either on the result of a competitive examination or after consultation with a selection committee constituted by the appointing authority in accordance with principles approved by Government.

(*iv*) No person will be eligible for appointment to a subordinate service or post who has endeavoured to enlist for his candidature the support of persons of influence or of officials of Government. Spontaneous recommendations from persons interested in, or otherwise known to, the candidate will be disregarded.

B. In the case of other subordinate services or posts that—

Candidates not already in Government service shall before appointment (1) be subjected to a prescribed medical test or furnish a certificate of health signed by a commissioned medical officer of Government or by an officer in medical charge of a civil station, and (2) furnish certificates of character to the satisfaction of the appointing authority.

12. Any subordinate service or post may be entered into or removed from the Schedule to these rules at any time by order of the local Government.

Schedule.

(*Vide* Rule 14A.)

	Department.	Service or post.
1.	Education	(1) Lecturers and Demonstrators.
		(2) Assistant Headmasters and Mistresses of High and Normal Schools.
		(3) Assistant in Mathematics, Presidency College.
		(4) Assistant Maulvis (excluding Vernacular Teachers) of the Arabic Department, Calcutta Madrasah.
		(5) Assistant Teachers of Ahsanullah School of Engineering, Dacca.
		(6) Head Assistant Teacher and Assistant Teachers of Government School of Art, Calcutta.
		(7) Assistant Teachers (excluding Senior and Junior Classical Teachers, Vernacular Teachers, Drill and Drawing Masters and Manual Instructors) of High and Normal Schools and Madrasahs, Headmasters and Mistresses of Middle English and Guru Training Schools and Junior Madrasahs, Assistant Maulvis (excluding Vernacular Teachers and Drill Masters) of Madrasahs, Physical Instructors of Colleges, Schools and Madrasahs, Laboratory Assistants (excluding non-teaching assistants of Presidency College) and Drawing Masters of Colleges, Music Teacher of Eden High School for Girls at Dacca, and Bengali Instructor of Sardah Police Training College.
		(8) Head and Assistant Mistresses (excluding Junior Teachers) of Vernacular Female Training Schools.
		(9) Subdivisional Inspectors of Schools.
		(10) Sub-Inspectors of Schools
		(11) Foreman and Assistant Foreman Instructors of the Bengal Engineering College and Ahsanullah School of Engineering, Dacca.
		(12) Matrons and Nurses, Central Hospital attached to the European Schools at Kurseong.
		(13) Second and Third Music Mistresses, Dow Hill School, Kurseong.
		(14) Hindi Teacher, Victoria School, Kurseong.
		(15) Lady House Keepers and House Mistresses in the European Schools at Kurseong.
		(16) Steward of the Victoria School, Kurseong.
		(17) Physical Instructress, Bethune College and Collegiate School.
		(18) Head and Assistant Kindergarten Mistresses (excluding Junior or Assistant Kindergarten Mistresses of the Sakhawat Memorial Girls' High School, Calcutta).
2.	Commerce and Marine.	(1) Bengal Subordinate Service of Electrical Inspectors.
		(2) Foreman, Narayanganj Dockyard.
		(3) Supervisor, Narayanganj Dockyard.

	Department.	Service or post.
3.	Irrigation	(1) Subordinate Engineering Service (Overseers).
4.	Local Self-Government (Medical).	(1) Bengal Medical Service (Lower). (2) Superintendent, Swarnamayee Hostel, Medical College, Calcutta. (3) Nursing Superintendents.
5.	Local Self-Government (Public Health).	(1) Assistant Analyst. (2) Assistant Publicity Officers. (3) Supervisor, Engineering Branch, Public Health Department.
6.	Police (Calcutta Police.)	Lady Superintendent, Rescue Home.
7.	Public Works	(1) The Subordinate Engineering Service (including Electrical Overseers). (2) The Inspector of Lightning Conductors. (3) Superintendent, Government House Garden, Bengal. (4) Sub-Assistant Surgeons, Public Works Department dispensaries. (5) Caretaker, Imperial Secretariat Buildings, Calcutta. (6) Caretaker, Writers' Buildings, Calcutta. (7) Fire Inspector for Central Government Buildings, Calcutta.
8.	Revenue (Excise)	Sub-Inspectors of Excise and Salt.
9.	Revenue (Cinchona).	Overseers, Government Cinchona Plantations.
10.	Revenue (Forests)	Ranger's Service.
11.	Agriculture and Industries.	(1) Inspectors of Co-operative Societies. (2) Auditors of Co-operative Societies. (3) Dyeing Lecturer at Serampore Weaving Institute. (4) Principal, Comilla Survey School. (5) Superintendents of Technical Schools at Rangpur, Bogra, Pabna and Barisal. (6) Superintendent, Berhampore Silk Weaving Institute. (7) Superintendent of Textile Demonstration at Serampore Weaving Institute. (8) Drawing teacher of the Serampore Weaving Institute. (9) Manager, Bengal Veterinary College. (10) Veterinary Inspectors (Bengal Veterinary College). (11) Veterinary Inspectors (Civil Veterinary Department). (12) Laboratory Assistants and District Agricultural Officers. (13) Superintendents of Sericulture Nurseries. (14) Sericultural Inspector. (15) Second Assistant Superintendent, Zoological Garden. (16) Overseers of Government gardens.
12.	All departments	Bengal Secretariat Service.

E. N. BLANDY,
Chief Secy. to the Govt. of Bengal (offg.).

POLITICAL DEPARTMENT.

Political.

NOTIFICATIONS.

Calcutta.—No. 14124P. — 5th September 1936.—In pursuance of the provisions of sub-section (2) of section 3 of the Bengal Public Security Act, 1932 (Ben. Act XXII of 1932), the Governor in Council is pleased to make the following general order specifying the custody to which persons arrested under the said section shall be committed, namely:—

Persons arrested under the said section in the town of Calcutta as defined in the Calcutta Police Act, 1866, or in the suburbs of Calcutta as defined by notification under section 1 of the Calcutta Suburban Police Act, 1866, shall be committed to the custody of the Superintendent of the Presidency Jail or of the Superintendent of the Alipore Central Jail.

Persons arrested under the said section in any district (excluding the suburbs of Calcutta) shall be committed to the custody of the Superintendent of the District Jail.

No. 14126P.—5th September 1936.—In exercise of the power conferred by sub-section (*1*) of section 3 of the Bengal Public Security Act, 1932 (Ben. Act XXII of 1932), the Governor in Council is pleased to authorise the following officers to make and direct arrests under the said sub-section:—

All Magistrates.

All civil police officers not below the rank of a Sub-Inspector or Sergeant.

No. 14129P.—5th September 1936.—In exercise of the powers conferred by section 22 of the Port Haj Committees Act, 1932 (XX of 1932), the Governor in Council is pleased to make the following amendment to rule 31 of the Calcutta Port Haj Committee Rules, 1933, published with notification No. 13604P., dated the 2nd December 1933:—

Substitute the words "the Reserve Bank of India" *for* the words "Imperial Bank of India" occurring in line 4.

E. N. BLANDY,

Chief Secy. to the Govt. of Bengal (offg.).

Jails.

Orders by the Inspector-General of Prisons, Bengal.

No. 22828.—7th September 1936.—Captain E. H. Lossing, I.M.S., made over charge of the Burdwan Jail to Lt.-Col. B. H. Singh, I.M.S., on the forenoon of the 28th August 1936.

R. E. FLOWERDEW, LT.-COL., I.M.S.,

Inspector-General of Prisons, Bengal.

POLICE DEPARTMENT.

Orders by the Inspector-General of Police, Bengal.

Calcutta. — No. 9579A. — 2nd September 1936.— **Dacca-Bankura-24-Parganas.** —Khan Sahib Mafizuddin Ahmad, Inspector, Dacca, is transferred to Bankura in exchange with Babu Hem Chandra Sen Gupta, Inspector, temporarily employed in the Intelligence Branch.

The transfer is sanctioned in the interests of public service.

J. C. FARMER,

Inspector-General of Police (offg.).

Bengal Board of Censors.

NOTIFICATION.

No. 9 C.B.—1st September 1936.—It is notified for general information that the Bengal Board of Censors have refused to certify the synchronised version of the film "Ourselves Alone," produced by the British International Pictures, length 6,425 feet, as suitable for public exhibition in the whole of the Presidency of Bengal.

E. HODSON,

Secy., Bengal Board of Censors.

JUDICIAL DEPARTMENT.

No. 10651A.

Powers.

Burdwan.—No. 10398A.—2nd September 1936.—Mr. Premananda Nag, Deputy Magistrate, Asansol, Burdwan, is vested with powers under section 190 (*1*) (*c*) of the Code of Criminal Procedure. He is also vested with powers to try summarily the offences mentioned in section 260 of the said Code.

Faridpur.—No. 10476A.—3rd September 1936.—Babu Birendra Mohan Ghosh, Deputy Magistrate, Faridpur, is vested, under section 407 (*2*) of the Code of Criminal Procedure, with the power to hear appeals from the decisions of Magistrates of the second and third classes.

E. N. BLANDY,

Chief Secy. to the Govt. of Bengal (offg.).

Appointments and Transfers.

Tippera.—No. 6607J.—1st September 1936 —Babu Surendra Nath Sen, No. II, Additional Subordinate Judge and Assistant Sessions Judge, Tippera, is appointed to be Subordinate Judge and Assistant Sessions Judge of the said district, *vice* Babu Amrita Lal Banarji.

Calcutta.—No. 6621J.—1st September 1936. —Mr Debendra Narain Bhattacharji, Advocate, High Court, Calcutta, is appointed to act as Deputy Superintendent and Remembrancer of Legal Affairs, Bengal, during the absence, on leave, of Mr. N. A. Khundkar, or until further orders.

Faridpur-Noakhali.—No. 6625J.—1st September 1936.—Babu Kamalesh Chandra Sen, probationary munsif, now employed as a munsif at Gopalganj, in the district of Faridpur, is appointed to be a munsif in the district of Noakhali, to be ordinarily stationed at Sudharam, during the absence, on leave, of Babu Syamadas Chatarji, or until further orders.

Birbhum.—No. 6653J.—2nd September 1936.—Maulvi Saiyidur Rahman, Subordinate Judge and Assistant Sessions Judge, on leave, is appointed temporarily to be Additional Subordinate Judge and Assistant Sessions Judge of Birbhum.

Chittagong-Rangpur. — No. 6656J. — 2nd September 1936.—Babu Manindra Prosad Singh, Subordinate Judge and Assistant Sessions Judge of Chittagong, is apponited to be Subordinate Judge and Assistant Sessions Judge of Rangpur, *vice* Babu Sharat Chandra De.

Rangpur-Chittagong. — No. 6659J. — 2nd September 1936.—Babu Gyanendra Nath Ghosh, officiating Additional Subordinate Judge of Rangpur, is appointed to act, until further orders, as Subordinate Judge of Chittagong.

Bakarganj-Jessore.—No. 6754J.—7th September 1936.—Babu Bikas Chandra Nandi Mazumdar, probationary munsif, now employed as a munsif at Pirojpur, in the district of Bakarganj, is appointed to be a munsif in the district of Jessore, to be ordinarily stationed at the Sadar station, during the absence, on leave, of Maulvi Mahatabuddin Ahmed, or until further orders.

Powers.

Midnapore.—No. 6609J.—1st September 1936.—In exercise of the power conferred by section 14 of the Code of Criminal Procedure, 1898 (Act V of 1898), the Governor in Council is pleased to confer upon Rai Sahib Kshitish Chandra Datta, an Honorary Magistrate of the Sadar bench, the powers of a Magistrate of the first class in the district of Midnapore for the period during which he has been directed to sit as a member of the said bench, in respect to such cases brought before the said bench within the limits of the jurisdiction of the said bench, and in respect to such cases as may be made over to him, when sitting singly, within the limits of the Sadar subdivision of the said district.

NOTIFICATIONS.

Rangpur.—No. 6611J.—1st September 1936.—In exercise of the power conferred by section 65 of the Bengal Village Self-Government Act, 1919 (Bengal Act V of 1919), the Governor in Council is pleased to appoint Babu Surendra Nath Das Gupta, a member of the Itakumari union board within the Pirgacha police-station in the Sadar subdivision of the Rangpur district, to be, during his term of office as such member, a member of the union bench within the jurisdiction of the said union board for the purposes of that section, *vice* Babu Mukunda Prosad Singh Kaviraj, deceased.

Rangpur.—No. 6612J.—1st September 1936. —In exercise of the power conferred by section 73 of the Bengal Village Self-Government Act, 1919 (Bengal Act V of 1919), the Governor in Council is pleased to appoint Babu Surendra Nath Das Gupta, a member of the Itakumari union board within the Pirgacha police-station in the Sadar subdivision of the Rangpur district, to be, during his term of office as such member, a member of the union court within the jurisdiction of the said union board for the purposes of that section, *vice* Babu Mukunda Prosad Singh Kaviraj, deceased.

N. G. A. EDGLEY,

Secy. to the Govt. of Bengal.

LOCAL SELF-GOVERNMENT DEPARTMENT.

NOTIFICATIONS.

Minister-in-charge: The Hon'ble Sir Bijoy Prasad Singh Roy, Kt.

Pabna. — No. 6838M. — 1st September 1936.—In exercise of the power conferred by section 506 of the Bengal Municipal Act, 1932 (Bengal Act XV of 1932), the Government of Bengal (Ministry of Local Self-Government) are pleased to confirm the by-laws framed by the Commissioners of the Pabna Municipality in the district of Pabna, under section 245 (*a*) and (*b*) of the said Act and published for information under notification No. 2142M., dated the 1st April 1936.

Calcutta.—No. 6861L.S.-G.—2nd September 1936.—Whereas the Corporation of Calcutta have, by a resolution passed at their meeting held on the 13th May 1936, made a recommendation under clause (*xviii*) of section 477 of the Calcutta Municipal Act, 1923 (Bengal Act III of 1923), that the attendance of the Corporation delegates at the All-India Local Self-Government Conference held at Delhi in March 1936 is a matter likely to promote the public health, safety and convenience within the meaning of the clause referred to above:

Now, therefore, in exercise of the power conferred by the said clause, the Government of Bengal (Ministry of Local Self-Government) are pleased to declare that the said matter is one which will promote the public health, safety and convenience within the meaning of the said clause.

Midnapore.—No. 6863L.S.-G.—2nd September 1936.—In exercise of the power conferred by section 10A of the Bengal Local Self-Government Act, 1885 (Bengal Act III of 1885), the Government of Bengal (Ministry of Local Self-Government) are pleased to determine that the Muhammadan community in the area under the authority of the local boards of Contai and Ghatal subdivisions of Midnapore district shall be deemed to be a minority community for the purposes of that section.

Hooghly.—No. 6865M.—2nd September 1936.—In exercise of the power conferred by section 506 of the Bengal Municipal Act, 1932 (Bengal Act XV of 1932), the Government of Bengal (Ministry of Local Self-Government) are pleased to confirm the by-laws framed by the Commissioners of the Kotrung Municipality, in the district of Hooghly, under section 417 of the said Act and published for information under notification No. 1222M., dated the 24th February 1936.

Nadia.—No. 6869M.—2nd September 1936. — The following draft of by-laws, which have been framed by the Commissioners of the Chakdah Municipality, in the district of Nadia, under section 417 of the Bengal Municipal Act, 1932 (Bengal Act XV of 1932), and which the Government of Bengal (Ministry of Local Self-Government) propose to confirm under section 506 of the Act, is published for the information of persons likely to be affected thereby.

2. The draft will be taken into consideration on the 1st December 1936, and any objection or suggestion received by the undersigned through the District Magistrate and the Divisional Commissioner before that date will be duly considered:—

Draft by-laws.

By-laws regarding standardization of weights and measures (section 417 of the Bengal Municipal Act, 1932).

1. In these by-laws the words "vendor" includes a shop-keeper, stall-holder, squatter or other salesman in any market or in any other place within the municipality.

2. All vendors within the municipality shall use—

(*i*) Government standard weights, that is to say, a maund consisting of forty seers, a seer consisting of eighty tolas and a tola consisting of one hundred and eighty *grains;* and

(*ii*) a standard cubit consisting of eighteen inches for the measure of commodities other than land.

3. The Commissioners shall require the Superintendents of the municipal markets or any other officers duly authorised by them in that behalf, and may require the owner, manager or other person in charge of a private market to keep in their custody standards of weights and measures conforming with the standard prescribed in by-law 2 for the purpose of verifying the weights and measures used by any vendor for the sale of articles in any market or in any other place. Such Superintendents or other officers duly authorized by the Commissioners shall keep in their custody a die for the purpose of stamping weights and measures, which have been duly verified in the manner provided in by-law 4.

4. The Superintendent of a municipal market or any other officer duly authorized by the Commissioners in that behalf, shall, not less than once in every three months, test and verify the weights and measures used by each vendor in every market or other place by comparison with the aforesaid standards and also similarly test and verify weight or measure that may be brought to him by any person at his office for the purpose of verification; and if, in either case, he finds the same to be correct, shall stamp it with the die mentioned in by-law 3 by way of verification on payment of such fee, *not exceeding annas four* in each case as the Commissioners may from time to time direct:

Provided that weights and measures once stamped shall not be stamped with the die a second time unless the stamp has become faint or obliterated.

24-Parganas.—No. 6871M.—2nd September 1936.—The following draft of by-laws, which has been framed by the commissioners of the Tollygunge Municipality, in the district of the 24-Parganas, under section 417 of the Bengal Municipal Act, 1932 (Bengal Act XV of 1932), and which the Government of Bengal (Ministry of Local Self-Government) propose to confirm under section 506 of the Act, is published for the information of persons likely to be affected thereby.

2. The draft will be taken into consideration on the 20th November 1936, and any objection or suggestion received by the undersigned through the District Magistrate and the Divisional Commissioner before that date will be duly considered :—

Draft by-laws.

By-laws regarding standardization of weights and measures (section 417 of the Bengal Municipal Act, 1932).

1. In these by-laws, the word "vendor" includes a shop-keeper, stall-holder, squatter or other salesman in any market or in any other place within the municipality.

2. All vendors within the municipality shall use—

(*i*) Government standard weights, that is to say, a *maund* consisting of forty *seers*, a *seer* consisting of eighty *tolas* and a *tola* consisting of one hundred and eighty *grains;* and

(*ii*) a standard cubit consisting of eighteen inches for the measure of commodities other than land.

3. The commissioners shall require the Superintendents of the municipal markets or any other officers duly authorised by them in that behalf, and may require the owner, manager or other person in charge of a private market to keep in their custody standards of weights and measures conforming with the standard prescribed in by-law 2 for the purpose of verifying the weights and measures used by any vendor for the sale of articles in any market or in any other place. Such Superintendents or other officers duly authorized by the commissioners shall keep in their custody a die for the purpose of stamping weights and measures, which have been duly verified in the manner provided in by-law 4.

4. The Superintendent of a municipal market or any other officer duly authorized by the commissioners in that behalf, shall, not less than once in every three months, test and verify the weighs and measures used by each vendor in every market or other place by comparison with the aforesaid standards and shall also similarly test and verify every weight or measure that may be brought to him by any person at his office for the purpose of verification; and if, in either case, he finds the same to be correct, shall stamp it with the die mentioned in by-law 3 by way of verification on payment of such fee, not *exceeding annas four* in each case as the commissioners may from time to time direct :

Provided that weights and measures once stamped shall not be stamped with the lie a second time unless the stamp has become faint or obliterated.

Jalpaiguri.—No. 6873M.—2nd September 1936.—In exercise of the power conferred by section 506 of the Bengal Municipal Act, 1932 (Bengal Act XV of 1932), the Government of Bengal (Ministry of Local Self-Government) are pleased to confirm the by-law framed by the Commissioners of the Jalpaiguri Municipality in the district of Jalpaiguri, under section 245 (*a*) and (*b*) of the said Act and published for information under notification No. 4483M., dated the 18th May 1936.

Midnapore.—No. 6875M.—2nd September 1936.—The following draft of by-laws, which has been framed by the commissioners of the Midnapore Municipality, in the district of Midnapore, under section 328 of the Bengal Municipal Act, 1932 (Bengal Act XV of 1932), and which the Government of Bengal (Ministry of Local Self-Government) propose to confirm under section 506 of the Act, is published for the information of persons likely to be affected thereby.

2. The draft will be taken into consideration on the 20th November 1936, and any objection or suggestion received by the undersigned through the District Magistrate and the Divisional Commissioner before that date will be duly considered :—

Draft by-laws.

Building by-laws regulating construction of buildings in less advanced municipalities (section 328 of the Bengal Municipal Act, 1932).

1. *Particulars to accompany application of erecting or re-erecting a masonry building.*—Every person who intends to erect or re-erect a masonry building shall forward to the Chairman an application with a plan and specification of the building and a site-plan of the land on which he proposes to make the erection or re-erection. In the said application he shall give a description of the building and its dimensions, and shall indicate the position of the site, the number assigned to it in the assessment book, its dimensions and such other particulars as may be required by the commissioners.

2. *Floor of buildings used for manufacture and storage of article for human consumption.*—The floor of every masonry building intended to be used for the manufacture or storage of articles for human consumption, shall be constructed of some impermeable material approved by the commissioners.

3. *Building over municipal drain.*—A masonry building shall not extend over any municipal drain.

4. *Level of floor.*—The lowest floor of every masonry building erected or re-erected from the ground shall be constructed at such level as will admit of the construction of a drain sufficient for the effectual drainage of the building, and placed at such level as will admit of the drainage being led into an existing or projected municipal drain.

5. *Foundation.*—Except with the sanction of the commissioners, the foundation of a masonry building shall rest on natural ground.

6. *Plinth.*—The plinth of a masonry building shall be at least two feet above the level of the centre of the nearest street: provided that the plinth of stables and cow-sheds need not be more than one foot above such level.

7. *Walls in building exceeding one story in height.*—(*1*) If a masonry building exceeds one story in height—

(*a*) no part of any wall, other than a cornice or a moulding, shall overhang any part of a wall underneath it; and

(*b*) every wall shall be of such thickness as the commissioners may consider necessary to ensure safety, regard being had to the height of the building, the materials of which it is constructed and the purpose for which it is intended.

(*2*) Nothing contained in sub-rule (*1*) shall prevent the erection of a second story upon an existing masonry building, the walls of which are certified by the commissioners as being able to bear the load proposed to be put upon them.

8. *Interior courtyards and open spaces to be raised.*—Every interior courtyard and every open space shall be raised at least one foot above the level of the centre of the nearest street, so as to admit of easy drainage.

9. *Height.*—No masonry building exceeding fifty feet in height shall be erected without the special permission of the commissioners.

10. *Site-plan.*—The site-plan sent to the Chairman under rule 1 shall be drawn to a scale of not less than one-fiftieth of an inch to a foot, shall be sent in duplicate and shall show—

(*a*) the boundaries of the site and of any contiguous land belonging to the owner thereof;

(*b*) the position, form and dimensions of privies, urinals, drains, cesspools, stables, cattle-sheds, cow-sheds, wells and other appurtenances of the building;

(*c*) the space which it is proposed to leave about the building to secure the free circulation of air, the admission of light and access for scavengering purposes; and

(*d*) such other particulars as may be required by the commissioners.

11. *Building-plan.*—The plan of the building (and the elevations and sections, whenever necessary), sent to the commissioners under rule 1, shall be neatly and accurately drawn to a scale of not less than one-eigth of an inch to a foot, shall be sent in duplicate and shall show—

(*a*) the depth and width of the foundation of the building;

(*b*) the level of the lowest floor of the building; and

(*c*) the level of all courtyards and open spaces in the building or premises and the plinth level of the building with reference to the level of the centre of the nearest street.

12. *Specifications.*—The specifications sent to the Chairman with any such plan shall comprise full information as to the following particulars :—

(*i*) the manner in which roof and house drainage and the surface drainage of the land will be disposed of;

(*ii*) the means of access to service-privies that will be available to scavengers;

(*iii*) the means of ingress and egress if the building is intended to be used as a dwelling house for two or more families or as a place for carrying on any trade or business in which more than 20 people may be employed, or as a place of public-resort; and

(*iv*) such other particulars as may be required by the Commissioners.

13. *Signature of plans, elevations and sections.*—The plan, elevation and sections referred to in rules 10 and 11 shall be signed clearly and in a prominent place by the owner of the building, or if he is illiterate, by any other person authorised by him to sign in his behalf, in which case they shall be marked with the owner's thumb-impression.

14. *Chairman to sign approved plans.*—The Chairman shall sign all passed plans in token of the approval of the commissioners.

15. *Restriction on application of certain rules.*—Rules 1, 10, 11, 12, 13 and 14 shall not be applied in the case of any alteration of, or addition to, a masonry building, unless one or more of the following works is under taken, namely :—

(*a*) the construction of a roof or an external or party-wall;

(*b*) any repairs to the building which involve the reconstruction of a masonry wall after the same has been entirely or in a great part demolished;

(*c*) the closing of any door or window in an external wall;

(*d*) the construction or removal of an internal wall or partition;

(*e*) any other alteration of the internal arrangements of a building which affects its courtyard or courtyards, or its drainage, ventilation or sanitary arrangements or which affects its security;

(*f*) the addition of any building, room, outhouse or other structure;

(*g*) the roofing of any space adjoining a wall or building; and

(*h*) the alteration of a building for the purpose of effecting a partition.

16. The penalty for the infringement of any of the by-law Nos. 2 to 9 shall be—

(*a*) a fine not exceeding Rs. 50, and

(*b*) in the case of a continuing infringement, a daily fine not exceeding Rs. 5 for each day after written notice of the offence is served by the commissioners.

24-Parganas.—No. 6877M.—2nd September 1936.—The following draft by-laws, which has been framed by the commissioners of the South Dum Dum Municipality, in the district of 24-Parganas, under section 417 of the Bengal Municipal Act, 1932 (Bengal Act XV 1932), and which the Government of Bengal (Ministry of Local Self-Government) propose to confirm under section 506 of the Act, is published for the information of persons likely to be affected thereby.

2. The draft will be taken into consideration on the 4th December 1936 and any objection or suggestion received by the undersigned through the District Magistrate and the Divisional Commissioner before that date will be duly considered :—

Draft by-laws.

By-laws regarding standardization of weights and measures (section 417 of the Bengal Municipal Act, 1932).

1. In these by-laws the word "vendor" includes a shop-keeper, stall-holder, squatter or other salesman in any market or in any other place within the municipality.

2. All vendors within the municipality shall use—

(*i*) Government standard weights, that is to say, a *maund* consisting of forty *seers*, a *seer* consisting of eighty *tolas* and a *tola* consisting of one hundred and eighty *grains;* and

(*ii*) a standard cubit consisting of eighteen inches for the measures of commodities other than land.

3. The commissioners shall require the Superintendents of the municipal markets or any other officers duly authorised by them in that behalf, and may require the owner, manager or other person in charge of a private market to keep in their custody standards of weights and measures conforming with the standard prescribed in by-law 2 for the purpose of verifying the weights and measures used by any vendor for the sale of articles in any market or in any other place. Such Superintendents or other officers duly authorized by the commissioners shall keep in their custody a die for the purpose of stamping weights and measures, which have been duly verified in the manner provided in by-law 4.

4. The Superintendent of a municipal market or any other officer duly authorized by the commissioners in that behalf, shall, not less than once in every three months, test and verify the weights and measures used by each vendor in every market or other place by comparison with the aforesaid standards and shall also similarly test and verify every weights or measure that may be brought to him by any person at his office for the purpose of verification; and if, in either case, he finds the same to be correct, shall stamp it with the die mentioned in by-law 3 by way of verification on payment of such fee, not *exceeding annas four* in each case as the commissioners may from time to time direct :

Provided that weights and measures once stamped shall not be stamped with the die a second time unless the stamp has become faint or obliterated.

Howrah.—No. 6906M.—2nd September 1936.—In exercise of the power conferred by section 506 of the Bengal Municipal Act, 1932 (Bengal Act XV of 1932), the Government of Bengal (Ministry of Local Self-Government) are pleased to confirm the by-laws framed by the Commissioners of the Bally Municipality, in the district of Howrah, under section 392 of the said Act and published for information under notification No. 2232M., dated the 7th April 1936.

No. 6914 L.S.-G.—2nd September 1936.—In exercise of the powers conferred by clauses (*a*) and (*b*) of sub-section (2) of section 101 of the Bengal Village Self-Government Act, 1919 (Bengal Act V of 1919), the Government of Bengal (Ministry of Local Self-Government) are pleased to make the following amendments in the rules, published with notification No. 630 T. L.S.-G., dated the 13th October 1919, as subsequently amended :—

Amendments.

Delete rules 25 and 38.

24-Parganas.—No. 6940M.—3rd September 1936.—In exercise of the power conferred by section 58 (2) of the Bengal Municipal Act, 1932 (Bengal Act XV of 1932), the Government of Bengal (Ministry of Local Self-Government) are pleased to appoint Mr. William Warden Craig to be a Commissioner of the Halisahar Municipality in the district of the 24-Parganas, *vice* Mr. George Craig, resigned.

No. 6988M.—4th September 1936.—The following draft of amendments which in exercise of the power conferred by section 122 of the Bengal Municipal Act, 1932 (Bengal Act XV of 1932), the Government of Bengal (Ministry of Local Self-Government), propose to make in the Account Rules published with notification No. 6499M., dated the 21st November 1935, is published for the information of persons likely to be affected thereby.

2. The draft will be taken into consideration on the 10th December 1936, and any objection or suggestion which may be received by the undersigned through the District Magistrate and the Divisional Commissioner before that date will be duly considered:—

Draft amendments.

(1) *For* paragraph 3 of rule 192 of the said rules, *substitute* the following:—

> The transactions of the trust account will be recorded in a cash-book in Form 99. As soon as possible after the 31st March in each year the Trustees may forward to the Chairman an abstract of the account in Form 100 and obtain from him a written acknowledgment of the correctness of the account. The Trustees may bring to the notice of Government any default in payment to the Sinking Fund which is not immediately remedied.

(2) *For* rules 199 and 200 the following rules shall be *substituted*:—

> 199. The interest accruing on the investment should be added to the corpus of the fund, the account of which shall be kept by the Commissioners in Form 99.
>
> 200. Immediately after the close of each financial year, the Commissioners shall submit to Government, through the proper channel, and to the Chief Engineer, Public Health Department, an abstract of the accounts of the fund in Form 100.

(3) *Add* the following forms as Forms Nos. 99 and 100:—

FORM No. 99.

Cash book of the Trust Fund for 19 .

Receipts.

Date.	From whom received.	Particulars of the receipt.	Government securities received or purchased (face value).	Permanent advance and its recoupment, if any.	Cash in hand.	Cash in Bank or Treasury.
1	2	3	4	5	6	7
			Rs.	Rs. a. p.	Rs. a. p.	Rs. a. p.
		To balance				
		Total ..				

Disbursements.

Date	Particulars of payment.	Voucher number.	Number of cheques issued, if any.	Government securities issued or sold (face value).	Payment out of the permanent advance.	Remittances to Bank or Treasury.	Payment out of the Bank or Treasury balance.
8	9	10	11	12	13	14	15
				Rs.	Rs. a. p.	Rs. a. p.	Rs. a. p.
			By balance				
			Total ..				

Accounts checked and balances verified .....

Administrator.

FORM No. 100.

Name of Fund , Class , Administering Officer.

Abstract of accounts for the year ending 31st March 19 .

Receipts.	Government securities (nominal value).	Cash.	Payments.	Government securities (nominal value).	Cash.
1	2	3	4	5	6
	Rs.	Rs. a. p.		Rs.	Rs. a. p.
Balance brought forward from last year's account ..			Expenditure as per Schedule B ..		
Receipts as per Schedule A ..			Sale of securities as *per contra* ..		
Sale of securities to the value of Rs. ..			Purchase of securities to the value of Rs. ..		
Securities purchased as *per contra* ..					
			Total ..		
			Balance ..		
Grand Total ..			Grand Total ..		

Bogra.—No. 7012M.—5th September 1936.—The following draft of by-laws, which has been framed by the Commissioners of the Bogra Municipality, in the district of Bogra, under section 375(*a*) of the Bengal Municipal Act, 1932 (Bengal Act XV of 1932), and which the Government of Bengal (Ministry of Local Self-Government) propose to confirm under section 506 of the Act, is published for the information of persons likely to be affected thereby.

2. The draft will be taken into consideration on the 1st December 1936, and any objection or suggestion received by the undersigned through the District Magistrate and the Divisional Commissioner before that date will be duly considered:—

Draft by-laws.

By-laws under clause (a) of section 375 of the Bengal Municipal Act, 1932, for the regulation of conduct of business in places used for the purposes mentioned in clauses (i), (ii) and (v) of sub-section (1) of section 370.

1. The licensee shall connect all drains in the place licensed under section 370 intended for the discharge of foul water with a municipal sewer, and the licensee shall not allow any foul water or refuse matter from such place to be discharged into a river, or channel, or any other reservoir of water intended for bathing, drinking or any other domestic purpose.

2. Where there is no sewer, the licensee shall collect the waste water from a place licensed under section 370 in properly constructed cesspools. Such cesspools shall be periodically cleansed or treated by the licensee in such a way as to render them inoffensive by activated sludge process or the contents thereof shall be otherwise disposed of in such manner as may be required by the Sanitary Inspector, Health Officer, or Chairman.

3. The licensee shall arrange for sufficient supply of water for cleansing the place licensed under section 370.

4. The licensee shall not cause or suffer any skin or hide which by reason of decomposition has become useless for the purpose of leather dressing, to be kept for a longer time than may be necessary in any part of the place licensed under section 370.

5. The licensee shall, at the close of every working day, cause every floor or pavement in the place licensed under section 370 to be thoroughly swept and washed. He shall, at the same time, cause all filth or refuse deposited on the floor or pavement of such place to be collected in suitable vessels or receptacles furnished with closely fitting covers and to be forthwith removed therein from the place.

6. The licensee shall cause the supply of water in every tank or other receptacle used upon the place licensed under section 370 for the washing or soaking of any skin or hide and not being a liming pit to be renewed as often as may be necessary to prevent the emission of noxious or injurious effluvia from the contents of the tank or other receptacles.

He shall cause every such tank or other receptacle to be furnished with a suitable cover and to be kept covered unless it is required to be kept open.

He shall cause every part of the tank or other receptacle, when emptied, to be thoroughly cleansed and shall cause all filth which has been removed therefrom to be forthwith conveyed from the place licensed under section 370 in suitable vessels or receptacles furnished with closely fitting covers, for disposal in a manner approved by the Commissioners.

7. The licensee shall cause all waste lime which has been taken out of any pit upon the place licensed under section 370 to be forthwith deposited in suitable vessels or receptacles or in a properly constructed cart or carriage which, when filled or loaded, shall be covered in such a manner as to prevent the emission of noxious or injurious effluvia from the contents thereof, and shall with all reasonable despatch be removed from the said place for deposit in a place fixed by the Commissioners or disposal in a manner approved by the Commissioners.

8. The licensee shall cause every beam, table, bench, knife, hammer or other implement or apparatus used upon the place licensed under section 370 for the purpose of unhairing, fleshing, breaking, scrapping, rounding, scudding or stocking any hide, butt or pelt or in any other process of his trade, to be cleansed from time to time as often as may be necessary to prevent any accumulation of filth upon the beam, table, bench, knife, hammer, implement, or apparatus.

9. The licensee shall cause all filth which has been splashed upon any part of the internal surface of any wall of any building upon the place licensed under section 370 to be removed by scraping or by some other effectual means of cleansing at least twice in every year, that is to say, at least once during each of the periods between the first and twenty-first day of March and the first and twenty-first day of September. He shall at the same time cause every part of the internal surface above the floor or pavement of the building to be thoroughly washed with hot limewash:

Provided (*i*) that the foregoing requirements as to limewashing shall not apply to any part of the internal surface of any building which is painted or covered with impervious material and may be otherwise properly cleansed, and (*ii*) that this by-law shall not apply to any part of any such building which is used only for the storage of dry leather.

10. The licensee shall cause any part of the internal surface of the walls of any building and every floor or pavement upon the place licensed under section 370 to be kept at all times in good order and repair so as to prevent the absorption therein of any liquid filth or refuse or any noxious or injurious matter which may be splashed or may fall or be deposited thereon.

11. The licensee shall cause every part of the interior and exterior of every tub or other vessel or receptacle used upon the place licensed under section 370 to hold a solution of the material known as "puer" to be thoroughly cleansed by scrubbing or by some other effectual means once at least in every week.

12. In a place licensed under section 370 in which the fleshing meat is dried for subsequent sale for the manufacture of such articles as glue or jujubes, the licensee shall cover the drying area by wire netting so as to prevent carrion birds from carrying away the material and dropping it in the vicinity of inhabited areas.

13. A breach of any of the provisions of by-laws 1 to 12 shall be punishable with fine which may extend to fifty rupees and when the breach is a continuing one, with a further fine which may extend to five rupees for every day after the date of first conviction during which the offender is proved to have persisted in the offence.

24-Parganas.- No. 7014M.—5th September 1936.—The following draft of by-laws, which has been framed by the Commissioners of the Bhatpara Municipality, in the district of 24-Parganas, under section 417 of the Bengal Municipal Act, 1932 (Bengal Act XV of 1932), and which the Government of Bengal (Ministry of Local Self-Government) propose to confirm under section 506 of the Act, is published for the information of persons likely to be affected thereby.

2. The draft will be taken into consideration on the 7th December 1936 and any objection or suggestion received by the undersigned through the District Magistrate and the Divisional Commissioner before that date will be duly considered:—

Draft by-laws.

By-laws regarding standardization of weights and measures (section 417 of the Bengal Municipal Act, 1932).

1. In these by-laws the word "vendor" includes a shop-keeper, stall-holder, squatter or other salesman in any market or in any other place within the municipality.

2. All vendors within the municipality shall use—

(*i*) Government standard weights, that is to say, a *maund* consisting of forty *seers*, a *seer* consisting of eighty *tolas* and a *tola* consisting of one hundred and eight *grains*; and

(*ii*) a standard cubit consisting of eighteen inches for the measure of commodities other than land.

3. The Commissioners shall require the Superintendents of the municipal markets or any other officers duly authorised by them in that behalf, and may require the owner, manager or other person in charge of a private market to keep in their custody standards of weights and measures conforming with the standard prescribed in by-law 2 for the purpose of verifying the weights and measures used by any vendor for the sale of articles in any market or in any other place. Such Superintendents or other officers duly authorized by the Commissioners shall keep in their custody a die for the purpose of stamping weights and measures, which have been duly verified in the manner provided in by-law 4.

4. The Superintendent of a municipal market or any other officer duly authorized by the Commissioners in that behalf, shall, not less than once in every three months, test and verify the weights and measures used by each vendor in every market or other place by comparison with the aforesaid standards and shall also similarly test and verify every weight or measure that may be brought to him by any person at his office for the purpose of verification; and if, in either case, he finds the same to be correct, shall stamp it with the die mentioned in by-law 3 by way of verification on payment of such fee, *not exceeding annas four* in each case as the Commissioners may from time to time direct:

Provided that weights and measures once stamped shall not be stamped with the die a second time unless the stamp has become faint or obliterated.

No. 7028L. S.-G.—7th September 1936.—In exercise of the power conferred by section 12 of the Bengal Motor Vehicles Tax Act, 1932 (Bengal Act I of 1932), the Government of Bengal (Ministry of Local Self-Government) are pleased to make the following amendment in the rules published under notification No. 5859L.S.-G., dated the 31st October 1933, at

pages 1575-1593 of Part I of the *Calcutta Gazette*, dated the 9th November 1933 :—

Amendment.

At the end of rule 37 of the said rules *add* the following :—

"Provided that failure to surrender a token when claiming a refund shall not be a bar to the granting of the refund, if the Taxing Officer is satisfied that the token has been destroyed under circumstances beyond the control of the owner and which did not call for the application for a duplicate under rule 17."

Rajshahi.—No. 7065L.S.-G.—7th September 1936.—In exercise of the power conferred by section 10A of the Local Self-Government Act, 1885 (Bengal Act III of 1885), the Government of Bengal (Ministry of Local Self-Government) are pleased to determine that the Hindu community in the area under the authority of the district board of Rajshahi and the local boards of Boalia, Nator and Naogoan of the district of Rajshahi shall be deemed to be minority community for the purposes of that section.

Faridpur.—No. 7063L.S.-G.—7th September 1936.—In exercise of the power conferred by section 5 of the Bengal Village Self-Government Act, 1919 (Bengal Act V of 1919), and after consideration of the views of the Faridpur district board and the Madaripur local board, the Government of Bengal (Ministry of Local Self-Government) are pleased to direct that each of the following local areas in police-stations Sibchar and Janjira, in the Madaripur subdivision of the Faridpur district, shall be declared a union for the purposes of the Act.

2. In exercise of the power conferred by sub-section (*1*) of section 6 of the said Act, the Government of Bengal (Ministry of Local Self-Government) are pleased to establish union boards for each of the unions hereby declared and to fix nine as the number of members of each union board.

3. In exercise of the power conferred by sub-section (*3*) of section 6 of the said Act, the Government of Bengal (Ministry of Local Self-Government) are pleased to direct that one-third of the number of members of each union board shall be appointed by the District Magistrate on the grounds that such appointment is necessary for the due representation of minorities and of different interests within the union :—

Faridpur district board.

Madaripur local board.

Sibchar police-station.

Names of mauzas constituting the union with their numbers in the jurisdiction list.

Kutubpur union.

Kutubpur	...	367
Char Keshabpur	...	82
Muzaffarpur	...	83

Kathalbari union.

Magura Khanda	...	345
Char Chandra	...	346
Bhasaldi	...	347
North Char Janajat	...	364
Kathalbari	...	358
Baghia	...	365
Dotara	...	366

Janjira police-station.

Palerchar union.

	Revenue Survey number.
Peepradee	... 4043
Arreeah	... 3490
Ramneool	... 4021
Louhajang	... 4022
Haradeea	... 4039
Kahaleaburogaon	... 4042

	Jurisdiction list number.
Diagaon	... 298
Akiadal	... 325
Kalikal	... 326
Sohagdal	... 330
Naopara	... 335
Durasa	... 336
Kirta	... 337
Rajani Barair Kandi	... 361
Darikandi	... 362
Dhangikandi	.. 363
Kathuria	. 357

Naodoba union.

East Naodoba	.. 353
West Naodoba	.. 354
Kuthibari	... 355
Painpara	... 351
Diara Gopalpur	... 359
Fedulla Beparir Kandi	.. 360
Pailan Mollar Kandi	... 356
Satgaon Chhota	. 245

Jessore.—No. 7088L.S.-G.—8th September 1936.—In exercise of the power conferred by section 11 of the Bengal Local Self-Government Act, 1885 (Bengal Act III of 1885), the Government of Bengal (Ministry of Local Self-Government) are pleased to appoint the following gentlemen to be members of the local boards in the district of Jessore:—

Sadar local board.

Maulvi Abdus Salam, B.L.

Khan Sahib Maulvi Ahmad Ali Enayatpuri.

Doctor Mahamad Ikhlas.

Maulvi Muhammad Yahya.

Maulvi Lutfar Rahaman.

Babu Nirmal Chandra Ghosh.

Rai Sahib Haridas Ganguly.

Bongaon local board.

Dr. Jafar Ali Chaudhury.

Maulvi Mahamad Reza.

Munshi Abdul Ghafur.

Babu Satya Charan Bose.

Babu Amulya Dhone Roy, B.L., M.L.C.

Jhenida local board.

Babu Hriday Nath Biswas.

Babu Girija Bhusan Chatterji.

Maulvi Kesmat Ali, B.L.

Maulvi Toazuddin, B.L.

Maulvi Muhammad Yakub Ali.

Narail local board.

Babu Natabar Hazra.

Babu Joytish Chandra Chakrabarty, B.L.

Maulvi Nur Muhammad.

Magura local Board.

Maulvi Mir Hashem Ali, B.L.

Maulvi Abdul Karim Molla.

Maulvi Muhammad Abdul Awal.

Babu Narendra Nath Chakraverty, B.L.

G. S. DUTT,
Secy. to the Govt. of Bengal.

CALCUTTA, THE 1st SEPTEMBER 1936.

RESOLUTION—No. 6846M.

Minister-in-charge: The Hon'ble Sir Bijoy Prasad Singh Roy, Kt.

The situation created by the mal-administration of the Vishnupur Municipality (in the district of Bankura), particularly in respect of the Assessment and Collection Departments has been under the consideration of Government for some time past. Their attention was first drawn to the matter in May 1935 by the local officers who recommended that these two departments of the municipality be superseded under section 550 of the Bengal Municipal Act, 1932, for a period of two years. The case for supersession of the Collection Department was based mainly on the ground that collections were extremely unsatisfactory and that the measures provided by law for the realisation of taxes had been neglected. It was reported that the outstanding arrears of taxes at the end of the year 1934-35 amounted to Rs. 13,416 against a current demand of Rs. 12,920 with nearly half the holdings out of assessment and that in spite of the large arrears the distress warrants issued by the municipality covered only a small portion of the demand. The proposal for superseding the Assessment Department was based on the fact that the Municipal Commissioners had not taken, nor had they shown any intention of taking, any action towards imposing a rate on holdings under the new Municipal Act, in spite of warnings from the local officers. On the facts reported, Government were of opinion that there was a strong *prima facie* case for superseding the Assessment and Collection Departments of the municipality; but before taking this extreme step, they considered it desirable to give the Municipal Commissioners a chance to improve their administration within a reasonable time and, accordingly in July 1935, a warning was given to the Municipal Commissioners to the effect that Government would seriously consider the question of superseding the two departments unless the Commissioners took necessary steps towards the imposition of a rate on holdings in place of the tax on persons from the commencement of the year 1936-37 and showed considerable actual improvement in the collection of taxes within a period of three months. Under the orders of Government, the Subdivisional Officer of Vishnupur inspected the municipality on the 21st October 1935. It appeared from his report that the Municipal Commissioners had practically taken no steps towards the introduction of the rate on holdings and the improvement of collections in spite of the warning given by Government. The municipality was again inspected by the District Magistrate on the 16th January 1936 and it appeared from his inspection notes that the Municipal Commissioners had not been able to effect any real improvement in the collection of the arrear and current taxes and that they had made no progress in the matter of imposition of a rate on holdings in place of the tax on persons under the old Municipal Act.

2. In view of the above state of affairs, the Municipal Commissioners were called upon, under section 550, sub-section (*1*), of the Bengal Municipal Act, to show cause why steps should not be taken to appoint a suitable person to take charge of the Assessment and Collection Departments of the municipality for a period of two years.

Government have carefully considered the explanation given by the Municipal Commissioners. They are of opinion that the inordinate delay made by the Commissioners in appointing an assessor for the purpose of imposing a rate on holdings was entirely unjustified and it only shows that they never seriously contemplated revising the assessment in accordance with the provisions of the new Municipal Act. There has no doubt been some improvement in the collection of taxes but the arrears are still very large and were allowed to accumulate for far too long a period. The improvement has not also been at all commensurate with the desperate financial position of the municipality.

3. In the circumstances stated above, Government of Bengal (Ministry of Local Self-Government) have come to the conclusion that the Commissioners of the Vishnupur Municipality have, in respect of the Assessment and Collection Departments, persistently made default in the performance of the duties imposed on them by the Municipal Act, and in exercise of the power conferred by sub-section (*2*) of section 550 of the Bengal Municipal Act, 1932, they direct that the Subdivisional Officer of Vishnupur shall take charge of the said departments for a period of two years with effect from the date of publication of this resolution in the *Calcutta Gazette*.

4. Ordered that this resolution be published in the *Calcutta Gazette*.

By order of the Govt. of Bengal
(Ministry of Local Self-Govt.),

G. S. DUTT,
Secy. to the Govt. of Bengal.

Medical.

Minister-in-charge: The Hon'ble Sir Bijoy Prasad Singh Roy, Kt.

No. 3502Medl.—31st August 1936.—The services of First Class Military Assistant Surgeon K. P. Elloy are placed at the disposal of the Government of India, Army Department, with effect from the 9th July 1936.

Calcutta.—No. 3503Medl.—31st August 1936.—Fourth Class Military Assistant Surgeon C. J. Pereira took over charge of his duties as House Surgeon, Presidency General Hospital, Calcutta, in the afternoon of the 4th August 1936 from temporary Assistant Surgeon Dr. Sudhangsu Kumar Ganguly.

Calcutta.—No. 3504Medl.—31st August 1936.—Temporary Assistant Surgeon Dr. Sudhangsu Kumar Ganguly, officiating House Surgeon, Presidency General Hospital, on relief, is appointed on supernumerary duty at the Medical College Hospitals, Calcutta, for the present.

24-Parganas-Rangpur. — No. 3461Medl. — 27th August 1936.—Dr. Jogendra Nath Bose, Assistant to Civil Surgeon, 24-Parganas, was appointed to act as Civil Surgeon, Rangpur, for the period from the 12th June 1936 to the 11th July 1936, during the absence, on leave, of Dr. Jamini Kanta Sen Gupta.

Calcutta-24-Parganas. — No. 3462Medl. — 27th August 1936.—Dr. Upendra Chandra Sarkar on supernumerary duty at the Medical College Hospitals, Calcutta, was appointed to act as Assistant to Civil Surgeon, 24-Parganas, for the period from the 8th June 1936 to the 15th July 1936, *vice* Dr. Jogendra Nath Bose.

Rangpur-24-Parganas. — No. 3463Medl.— 27th August 1936.—Dr. Jogendra Nath Bose, officiating Civil Surgeon, Rangpur, on relief, is reappointed as Assistant to Civil Surgeon, 24-Parganas, *vice* Dr. Upendra Chandra Sarkar.

24-Parganas-Calcutta. — No. 3464Medl. — 27th August 1936.—Dr. Upendra Chandra Sarkar, officiating as Assistant to Civil Surgeon, 24-Parganas, on relief, is placed on supernumerary duty at the Medical College Hospitals, Calcutta, with effect from the 17th July 1936.

Calcutta.—No. 3492 Medl.—29th August 1936.—Dr. Suresh Chandra Sinha, M.B. (CAL.), F.R.C.S. (EDIN.), is appointed as Professor of Anatomy, Medical College, Calcutta, with effect from the date on which he takes over the charge.

2. Dr. Sinha will be on probation for a period of two years.

Midnapore.—No. 3552 Medl.—2nd September 1936.—Babu Manindra Kumar Sen, Deputy Magistrate and Deputy Collector, Ghatal, Midnapore, is appointed to be Personal Assistant to the Surgeon-General with the Government of Bengal,

Mymensingh.—No. 3555 Medl.—2nd September 1936.—Lt.-Col. S. Nag., I.M.S., Civil Surgeon, Mymensingh, is granted leave on average pay for twenty-one days, under rule 81 (*b*) (*ii*) of the Fundamental Rules, with effect from the 27th September 1936.

Mymensingh.—No. 3556 Medl.—2nd September 1936.—Dr. Ananta Mohan Dutta of the Sadar Hospital, Mymensingh, and Teacher fo Medical Jurisprudence and Hygiene of the Medical School there, is appointed to act as Civil Surgeon of the district in addition to his own duties, during the absence, on leave, of Lt.-Col. S. Nag, I.M.S., or until further orders.

No. 3562 Medl.—3rd September 1936.—The following officiating Civil Surgeons are confirmed in the grade of permanent Civil Surgeons with effect from the dates noted against each :—

Dr. Jamini Kanta Sen Gupta on 3rd December 1935.

Dr. Bidyananda Dutta on 26th January 1936.

Dr. Ramani Mohan Mukharjee on 16th February 1936.

No. 3575 Medl.—3rd September 1936.—The following two Sub-Assistant Surgeons are promoted to the rank of Civil Assistant Surgeons in the Bengal Medical Service (Upper) with effect from the dates noted against their names :—

Dr. Kali Prasad Singh Roy—23rd April 1936.

Dr. Jatindra Nath Sen Gupta—8th May 1936.

They will be on probation in the Bengal Medical Service (Upper) for one year from the date of their promotion.

This cancels notification No. 1878 Medl., dated the 9th April 1936.

Calcutta.—No. 3580Medl.—4th September 1936.—Dr. Khagendra Mohan Basu, Personal Assistant to the Surgeon-General with the Government of Bengal, is granted leave on average pay for the period from the 6th September 1936, to the 2nd November 1936, under rule 81 (*b*) (*ii*) of the Fundamental Rules.

Calcutta.—No. 3604Medl.—7th September 1936.—Dr. Charu Brata Roy, a Demonstrator of Physiology, Medical College, Calcutta, has been appointed as Teacher of Physiology, Campbell Medical School, Calcutta, *vice* Dr. Madan Mohan Datta, granted leave preparatory to retirement.

Calcutta.—No. 3605Medl.—7th September 1936.—Dr. Nalini Ranjan Konar on supernumerary duty at the Medical College Hospitals, Calcutta, is appointed temporarily to act as a Demonstrator of Physiology, Medical Collage, Calcutta, *vice* Dr. Charu Brata Roy, transferred to the Campbell Medical School.

ADDENDUM.

Minister-in-charge: The Hon'ble Sir Bijoy Prasad Singh Roy, Kt.

Calcutta.—No. 3471Medl.—27th August 1936.—In resolution No. 2258Medl., dated the 19th May 1936, reconstituting the Visiting Committee of the Campbell Hospital, Sealdah, *add* the following against entries Nos. 14 and 15 in the list of members constituting the Committee:—

(14) Mr. Md. Hashim, representative of the Corporation of Calcutta.

(15) Mr. Naresh Nath Mookerjee, representative of the Corporation of Calcutta.

NOTIFICATION.

Minister-in-charge: The Hon'ble Sir Bijoy Prasad Singh Roy, Kt.

Dacca.—No. 3512Medl.—31st August 1936.—The appointment of Maulvi Md. Jalilur Rahman as a member of the committee for the management of the Homeopathic Charitable Dispensary at Shahbazpur in the Sadar subdivision of the district of Dacca in the place of Maulvi Rahimuddin Sarcar, resigned, is notified for general information.

Public Health.

NOTIFICATION.

Calcutta-Chittagong.—No. 3520P.H.—8th September 1936.—It is hereby notified for general information that Madras has been declared free from cholera, and that the regulations for the prevention of the introduction of cholera by sea, which were imposed in the ports of Calcutta and Chittagong against vessels arriving from Madras, are hereby withdrawn.

G. S. DUTT,
Secy. to the Govt. of Bengal.

EDUCATION DEPARTMENT.

NOTIFICATIONS.

Calcutta.—No. 3068 Edn.—7th Septem-1936.—In exercise of the power conferred by section 6, sub-section (*1*), clause (*c*), and section 10 of the Indian Universities Act, 1904 (VIII of 1904), as amended by the Calcutta University Act, 1921 (VII of 1921), His Excellency the Chancellor of the Calcutta University is pleased to renominate Nawabzada A. S. M. Latif-ur-Rahman M.A. (Cantab.), Barrister-at-Law, to be an Ordinary Fellow of the University.

Minister-in-charge: The Hon'ble Khan Bahadur M. Azizul Haque.

Dacca. — No. 3039 Edn. — 3rd September 1936.—Khan Sahib Maulvi Abdul Hakim, officiating Principal, Islamic Intermediate College, Dacca, was on leave on average pay for the period from the 25th May to the 1st June 1936, under rules 81 (*b*) (*ii*) and 82(*b*) of the Fundamental Rules.

Calcutta.—No. 3064Edn. — 5th September 1936.—Dr. Mahendra Nath Sarkar, Professor of Philosophy, Presidency College, Calcutta, in the Bengal Educational Service, has been granted by the High Commissioner for India, leave on average pay for four days with effect from the 1st September 1936, in extension of the leave already granted to him by the Director of Public Instruction, Bengal.

Registration.

NOTIFICATIONS.

Minister-in-charge: The Hon'ble Khan Bahadur M. Azizul Haque.

Mymensingh.—No. 588Regn.—7th September 1936.—In exercise of the power conferred by section 3 of the Bengal Muhammadan Marriages and Divorces Registration Act, 1876 (Bengal Act I of 1876), the Government of Bengal (Ministry of Education) are pleased to appoint Maulvi A. S. Md. Mahiuddin temporarily to be a Muhammadan Registrar within the police-station of Gaffargaon, in the district of Mymensingh, during the absence, on leave, of Maulvi A. K. M. Fazlul Haq, or until further orders.

Mymensingh.—No. 589 Regn.—7th September 1936.—In exercise of the power conferred by section 2 of the Kazis' Act, 1880 (Act XII of 1880), the Government of Bengal (Ministry of Education) are pleased to appoint Maulvi A. S. Md. Mahiuddin temporarily to be the Kazi for the celebration of marriages and the performance of other rites and ceremonies within the police-station of Gaffargaon, in the district of Mymensingh, during the absence, on leave, of Maulvi A. K. M. Fazlul Haq, or until further orders.

24-Parganas.—No. 596Regn.—7th September 1936.—It is hereby notified for general information that the Government of Bengal (Ministry of Education) are pleased to sanction the retention for a further period of one year, with effect from the 22nd September 1936, of the office of the Sub-Registrar of Bhangore in the district of the 24-Parganas.

H. GRAHAM,
Secy. to the Govt. of Bengal.

Orders by the Director of Public Instruction, Bengal.

Bengal Educational Service.

Presidency Division. — No. 46B. — 22nd August 1936.—Khan Sahib Maulvi Abdul Khaleq, Assistant Inspector of Schools for Muhammadan Education, Presidency Division, in the Bengal Educational Service, is declared, in terms of Fundamental Rules 81 (*b*) (*ii*), to have been on leave on average pay for one day, viz., the 15th June 1936, in extension of the leave granted to him in this office notification No. 33B., dated 2nd July 1936.

Dacca.—No. 49-B.—25th August 1936.—Babu Chintaharan Banerji, Professor of English, Dacca Intermediate College, in the Bengal Educational Service, is declared, in terms of Fundamental Rule 81(*d*), to have been on leave on half average pay for the period from 11th August 1936 to 15th August 1936.

J. M. BOTTOMLEY,
Director of Public Instrn., Bengal.

Orders by the Inspector-General of Registration, Bengal.

Nadia - Dinajpur - Pabna - Rajshahi.—No. 493.—29th August 1936.—Maulvi Hakimuddin Ahmad, Sub-Registrar under orders of transfer to Mahadebpur, in the district of Rajshahi, is appointed to be Sub-Registrar of Mirpur, in the district of Nadia.

This cancels this department notification Nos. 433, dated the 23rd July 1936 and 463, dated the 6th March 1936, appointing him respectively to be the Sub-Registrars of Gangarampur in the district of Dinajpur and of Bhangura in the district of Pabna.

24-Parganas. — No. 494. — 31st August 1936.—Babu Sukumar Chakrabutti, Sub-Registrar attached to Sadar Registration office at Alipore, in the district of the 24-Parganas, is allowed leave on average pay for one month, under rule 81(*b*) (*ii*) of the Fundamental Rules, in extension of the leave granted to him in this department notification No. 471, dated the 13th August 1936.

Dinajpur.—No. 495.—31st August 1936.—Babu Haripada Sen, Sadar Joint Sub-Registrar, Dinajpur, acted as Sub-Registrar of Raiganj in the same district, from 3rd to 11th August 1936 (inclusive), during the absence, on leave, of Maulvi Amiruddin Ahmad.

Dinajpur.—No. 496.—31st August 1936.—Babu Ananda Mohan Roy, Probationery Sub-Registrar of Dinajpur, officiating as Sub-Registrar of Raiganj in the same district, is appointed to act, until further orders, as Sub-Registrar of Gangarampur in the same district.

24-Parganas.—No. 497.—1st September 1936.—Babu Jnanendra Mohan Banarji, Sub-Registrar of Joynagar, in the district of the 24-Parganas, is allowed leave on average pay for twelve days, under rule 81(*b*) (*ii*) of the Fundamental Rules, with effect from the 26th August 1936.

Calcutta-24-Parganas. — No. 498. — 1st August 1936.—Babu Saurindra Nath Sen, Sub-Registrar attached to the office of the Registrar of Assurances, Calcutta, is appointed to act as Sub-Registrar of Joynagar, in the district of the 24-Parganas, with effect from the 26th August 1936, during the absence, on leave, of Babu Jnanendra Mohan Banarji, or until further orders.

Noakhali. — No. 499. — 1st September 1936.—Babu Kamalini Kanta Sinha Ray, Joint Sub-Registrar of Chagalnaiya at Fulgazi, in the district of Noakhali, is allowed leave on average pay for fifteen days, under rule 81(*b*) (*ii*) of the Fundamental Rules, with effect from the 6th June 1936.

This cancels this department notification No. 389, dated the 30th June 1936.

Dinajpur.—No. 500.—1st September 1936.—Maulvi Abdur Rashid, Sub-Registrar of Thakurgaon, in the district of Dinajpur, is allowed leave on average pay for two months and seventeen days, under rule 81 (*b*) (*ii*) of the Fundamental Rules, with effect from the 1st August 1936.

Dinajpur. — No. 501. — 1st September 1936.—Maulvi Tajuddin Ahmed, Sub-Registrar attached to Dinajpur, officiating as Sub-Registrar of Balurghat in the same district, is appointed to act, until further orders, as Sub-Registrar of Thakurgaon in the same district, with effect from the 1st August 1936.

Noakhali. — No. 502. — 1st September 1936.—Babu Makhan Lal Ghosh, probationary Sub-Registrar attached to the Sadar Registration office at Noakhali, is allowed leave for three months, viz., earned leave on average pay for three days, under rule 9 of the Bengal Services (Revision of Leave) Rules, with effect from the 16th May 1936, and leave on medical certificate, under rule 16 of the same rules for the remaining period.

This cancels this department notification No. 400, dated the 6th July 1936.

Faridpur. — No. 503. — 1st September 1936.—Babu Hem Chandra Ray, Sub-Registrar of Baliakandi, in the district of Faridpur, is allowed leave on average pay for five days, under rule 81 (*b*) (*ii*) of the Fundamental Rules, with effect from the 11th August 1936.

24-Parganas. — No. 504. — 1st September 1936.—Babu Nripendra Mohan Bakshi, Sub-Registrar attached to the Sadar Registration office at Alipore, in the district of the 24-Parganas, is allowed leave on average pay for seven days, under rule 81 (*b*) (*ii*) of the Fundamental Rules, with effect from the 13th August 1936.

Nadia.— No. 505. —4th September 1936.—Babu Jatindra Mohan Nath, Sub-Registrar of Kumarkhali, in the district of Nadia, is allowed leave on average pay, under rule 81 (*b*) (*ii*) of the Fundamental Rules, with effect from the 1st September 1936, or any subsequent date on which he may be relieved to the 17th October 1936 (inclusive).

Nadia.—No. 506.—4th September 1936.—Babu Atulya Dhan Bagchi, Sub-Registrar of Mirpur, in the district of Nadia, is appointed to be Sub-Registrar of Kumarkhali in the same district.

Pabna.—No. 507.—4th September 1936.—Maulvi Jasimuddin Ahmed, Joint Sub-Registrar of Sujanagar at Bera, in the district of Pabna, is allowed leave on average pay for thirteen days, under rule 81 (*b*) (*ii*) of the Fundamental Rules, with effect from the 31st October 1936.

24-Parganas. — No. 508 .— 4th September 1936.—Babu Abani Bhusan Chakrabutti, Sub-Registrar of Habra, in the district of the 24-Parganas, is appointed to be Sub-Registrar of Kakdip in the same district.

24-Parganas. — No. 509. — 4th September 1936.—Babu Ramesh Chandra Das Gupta, Sub-Registrar of Kakdip, in the district of the 24-Parganas, is appointed to be Sub-Registrar of Habra in the same district.

Faridpur.—No. 510.—7th September 1936.—Babu Kamala Kinkar Ray Chaudhuri, officiating Joint Sub-Registrar of Muksudpur, at Kasiani, in the district of Faridpur, was on leave on average pay for six days, under rule 81 (*b*) (*ii*) of the Fundamental Rules, with effect from the 11th June 1936.

Dacca.—No. 511.—7th September 1936.—Maulvi Chaudhuri Barhanuddin Ahmed Siddique, Sub-Registrar of Kaliganj, in the district of Dacca is allowed leave on average pay for three days, under rule 81 (*b*) (*ii*) of the Fundamental Rules, with effect from the 20th August 1936.

S. CHATTERJEA,
Inspr.-Genl. of Registration, Bengal.

FINANCE DEPARTMENT.

Audit.

NOTIFICATIONS.

No. 7337F.—4th September 1936.—In exercise of the powers conferred by rules 41, 42 and 44 of the Civil Services (Classification, Control and Appeal) Rules, and with the previous sanction of the Governor General in Council as required by rule 11 of those rules, the Governor in Council and acting with his Ministers is pleased to direct that the following amendments shall be made in the Contributory Provident Fund Rules (Bengal), namely :—

In sub-rule (*6*) of rule 11, in the second proviso to sub-rule (*1*) of rule 20, in clause (*i*) of sub-rule (*1*) and in the proviso to sub-rule (*2*) of rule 21, and in sub-rule (*2*) of rule 22 of the said rules, for the words, brackets and figures "sub-rule (*3*) of rule 19" the words, brackets and figures "sub-rule (*4*) of rule 19" shall be substituted.

No. 7459F.—4th September 1936.—In exercise of the powers conferred by rules 41, 42 and 44 of the Civil Services (Classification, Control and Appeal) Rules and with the previous sanction of the Governor-General in Council as required by rule 11 of those rules, the Governor in Council and acting with his Ministers is pleased to direct that the following amendment shall be made in the General Provident Fund (Bengal Services) Rules, namely :—

In sub-rule (*6*) of rule 14, in the second proviso to sub-rule (*1*) of rule 23, in clause (*i*) of sub-rule (*1*) and in the proviso to sub-rule (*2*) of rule 24, and in rule 26 of the said rules, for the words, brackets and figures "sub-rule (*3*) of rule 21" the words, brackets and figures "sub-rule (*4*) of rule 21" shall be substituted,

CORRIGENDUM.

No. 5710 F.—29th June 1936.—The Government of Bengal are pleased to issue the following corrigendum to the Fundamental and Subsidiary Rules, 1st Edition (Reprint), 1929 :—

Pages 298 to 328—Appendix No. 18.—Substitute the following for Appendix No. 18 :-

APPENDIX 18.

[F. R. 74(*a*).]

Instructions issued by the Auditor-General under Fundamental Rule 74.

I. PROCEDURE RELATING TO LEAVE.

Certificate of Admissibility.

1. *Gazetted Government servants.*—Leave should be sanctioned to a gazetted Government servant only after its admissibility has been certified by the Audit Officer who has been auditing his pay.

NOTE.—The leave accounts of the Archdeacon of Calcutta and the President Senior Chaplain, Church of Scotland, Bengal, are maintained by the Accountant-General, Central Revenues. The leave accounts of all other Chaplains both of the Church of England and of the Church of Scotland, including those attached to regiments, are maintained by the Accountant-General of the Province in which they serve. In the case of Chaplains therefore the certificate of admissibility of leave required by the above rule will be issued by the Accountant-General who maintains the leave accounts.

2. *Non-Gazetted Government servants.*—Before leave in India is sanctioned to a non-gazetted Government servant, the authority sanctioning the leave should either consult the leave account prescribed in Fundamental Rule 76, and satisfy himself that the leave is admissible, or obtain a certificate to that effect from the officer entrusted with the attestation of the entries in the leave account. When the application is for leave out of India, the authority sanctioning the leave should obtain a certificate of admissibility from the Audit Officer before sanctioning the leave.

3. *Military Officers.*—When a Military Officer becomes subject to the Civil Leave Rules, the Audit Officer in charge of his record of pension service will, on application and on being furnished with the date of commencement of active service in Civil employ, furnish to the Audit Officer to whose audit he becomes subject, a memorandum showing the furlough earned, the different kinds of leave taken (distinguishing those which should be deducted from the maximum furlough admissible) and the balance of furlough due under Military Rules.

4. (*a*) Applications for leave from Military Officers in Civil employ, whether they are subject to the Military Leave Rules or the Civil Leave Rules, should be sent through the Civil Audit Officer who audits the pay of the officer going on leave. The Civil Audit Officer will, if he considers it necessary, consult the Controller of Military Accounts from whose payment the officer is transferred to the Civil Department before certifying to the leave and specifying the leave salary. No leave should be sanctioned to such an officer before a report is received from the Civil Audit Officer.

(*b*) In the case of a Military Officer subject to the Military Leave Rules the Civil Audit Officer should obtain from the Controller of Military Accounts from whose payment the officer is transferred to the Civil Department a certificate stating the amount of leave to which the officer is entitled, and the rate of leave pay and allowances admissible during the said period of leave, before issuing a leave-salary certificate, or a warrant, or a certificate of leave granted to an officer proceeding on leave out of India who does not intend to draw his leave salary at the Home Treasury or in a Colony.

5. *Government servants in foreign service.*—In the case of a Government servant on foreign service, leave cannot be sanctioned until the Audit Officer of the Government (central or provincial), under which he was permanently employed at the time of his transfer to foreign service, has certified the amount of leave and the leave-salary admissible.

NOTE 1.—For the purpose of this rule, the Accountant-General of the Province in which the contributions towards leave-salary and pension of a Government servant on foreign service are recovered will act as the Audit Officer of the Central Government.

NOTE 2.—In the case of Military Officers in temporary civil employ, the Controller of Military Accounts who receives the foreign service contributions of the officers concerned is responsible for certifying to the amount of leave and leave-salary admissible, the necessary information in the case of military officers subject to the civil leave rules being obtained from the civil audit officer concerned. Similarly in the case of Government servants in commercial departments (*e.g.*, Railways and Indian Posts and Telegraphs Departments) the certificate will be given by the departmental accounts officer who is responsible for bringing the contributions to account.

Payment of Leave-salary in India.

6. *Non-Gazetted Government servants.*—The leave-salary of a non-gazetted Government servant on leave in India or on leave out of India cannot be drawn in India, except under the signature of the head of his office ; and the latter is responsible for any overcharge.

7. *Gazetted Government servants.*—No gazetted Government servant can begin to draw his leave-salary at any office of payment in India without producing a leave-salary certificate from the Audit Officer who audited his pay before he proceeded on leave.

8. The certificate should be in F. R. Form No. 2 B. ; and if during leave the gazetted Government servant desires to change the office at which he receives payment of his leave-salary, he must obtain a new certificate from the Audit Officer within whose jurisdiction his leave-salary was last paid.

8A. A gazetted Government servant desirous of discontinuing his subscription to the General Provident Fund during leave or of subscribing to the Fund at the usual rates during leave on average pay and at half rates during other leave, should intimate his wishes in the matter to his audit officer before proceeding on leave.

8-B. In the case of a Government servant entitled to Sterling Overseas Pay, who draws his leave-salary in India that portion of leave-salary which represents sterling overseas pay is payable by the High Commissioner for India. A separate authority should be issued to the High Commissioner for India for payment of the sterling portion of the leave-salary and to stop payment of duty sterling overseas pay. A copy of this authority should also be sent to the officer to enable him to draw the amount in accordance with the procedure laid down for the payment of leave-salary from the Home Treasury.

9. If a gazetted Government servant signs his bill himself he must either appear in person at the place of payment or furnish a life certificate signed by a responsible officer of Government or some other well-known and trustworthy person. If he draws his leave-salary through an authorised agent, the agent, whether he has or has not a power of attorney, must either furnish a life certificate as aforesaid, or execute a bond to refund overpayments. A life certificate may be given periodically, a bond being given to cover intermediate payments not supported by life certificates.

10. The provisions of paragraphs 7 to 9 above apply also to gazetted Government servants who spend their leave out of India but reside in Asia and who have to draw their leave-salary in rupees in India under Fundamental Rule 91.

NOTE.—A certificate of residence should be obtained from Government servants who draw their leave-salary at the rupee rate.

11. *Railway and Telegraph Departments and Military Engineer Services.*—In the case of the Railway and Telegraph Departments and the Military Engineer Services the above rules will be generally applicable subject to any modifications which may be made by the Accountant-General concerned in accordance with special rules of his department.

12. *Return to duty.*—Before returning to duty a Government servant who has drawn his leave-salary in India should obtain a last-pay certificate from the Audit Officer, within whose jurisdiction his leave-salary was last paid, and deliver it to the Audit Officer who audits his pay. Without such a certificate he cannot obtain payment of any arrears of leave-salary or pay due to him.

Leave out of India.

13. *Memorandum of Informations.*—A copy of the "Memorandum of Information for the guidance of Government servants proceeding on leave out of India" should be supplied to each Government servant proceeding on leave out of India by the Audit Officer who audits his pay, as soon as the grant of leave is gazetted or otherwise notified to him.

14. *Leave-salary Certificate and Colonial Leave-salary Warrant.*—(*a*) A Government servant proceeding on leave out of India and intending

to draw his leave-salary while on leave should be given a leave-salary certificate by the Audit Officer who audited his pay before he proceeded on leave—

(1) in F. R. Form No. 2, if he intends to draw his leave-salary at the Home Treasury ;

(2) in the shape of a leave-salary warrant in Form No. I under the Supplementary Rules, if he is proceeding to a Colony and intends to draw his leave-salary there.

(*b*) If during any period of leave on average pay a gazetted Government servant wishes, under the provisions of Fundamental Rule 91, to draw his leave-salary in India, a separate leave-salary certificate should be issued in respect of that period under the provisions of paragraph 8 above.

NOTE 1.—When vacation is taken alone or combined with holidays and spent out of India, or when vacation or/and holidays is/are prefixed or affixed to leave out of India, and is/are actually spent out of India, the Government servant may, in the absence of any specific restriction laid down either in a statutory rule or by a local Government, be authorised to draw his pay or leave-salary or both for the whole period at the Home Treasury or in a Colony, but the exact amounts to be paid on account of each separate period must be stated in the certificate or warrant, as the case may be, issued by the audit officer.

NOTE 2.—When a Chaplain of the Church of Scotland proceeds to the United Kingdom on leave granted by the civil authority on his being reverted for the purpose from military to civil duty and intends to draw his leave-salary from the Home Treasury, the Controller of Military Accounts from whose office he was in receipt of pay sends to the Accountant-General concerned a last-pay certificate on receipt of which a leave-salary certificate should be issued by the Accountant-General.

14A. In the case of a Government servant proceeding on leave to a Dominion or Colony and intending to draw that portion of his leave salary which represents sterling overseas pay from the Home Treasury, the Colonial leave-salary warrant issued under paragraph 14 (2) above should authorise payment of leave-salary based on rupee pay only. A separate intimation should be sent to the High Commissioner to pay that portion of leave-salary which represents sterling overseas pay. A copy of this intimation should also be given to the Government servant in order that he may arrange to draw the amount in accordance with the procedure laid down for the payment of leave-salary from the Home Treasury.

15. When a Government servant proceeds out of India on leave other than extraordinary leave, the Audit Officer who audits his pay will, as soon as the leave is gazetted or otherwise notified, send him a letter in F. R. Form No. 4 with enclosures in F. R. Form No. 5 requiring him to call at his office or give the necessary information.

NOTE.—If a Government servant sent home to Europe as a lunatic is granted leave, a leave-salary certificate should be prepared, if necessary, by the Audit Officer who audits his pay on the data available to him, and forwarded to the High Commissioner for India at the earliest possible date.

16. If the Government servant calls at the Audit office he will be paid up to the date of his relief and will be given a leave-salary certificate in the appropriate form as prescribed in paragraph 14 above. In the case of Government servants proceeding to a Colony, the Colonial leave-salary warrant (Form No. I under the Supplementary Rules) will be issued in triplicate. The original, bearing the Government servant's signature, will be forwarded by the Audit Officer to the Colonial Authority concerned, the duplicate to the High Commissioner for India and the triplicate will be made over to the Government servant concerned.

NOTE. —If the Government servant takes a certificate under clause (*b*) of paragraph 14 above, he will not be paid up to the date of relief, but will be allowed to draw his pay and allowances for the broken period of the month at the commencement of the next month along with the leave-salary for the rest of the month.

17. If the Government servant is unable to call at the Audit office, the Audit Officer will cause the leave-salary certificate to be sent to the address

specified by the Government servant and the pay and allowances to be paid through the Officer from whom the Government servant draws his pay and allowances.

NOTE.—The orders in the Note under paragraph 16 apply also in the circumstances specified in this paragraph.

18. When a Government servant proceeds on extraordinary leave out of India, or on leave on average pay or half average pay out of India during which he does not propose to draw leave-salary, or when a Government servant is given a Colonial leave-salary warrant, he should be given a certificate of leave in Form No. II under the Supplementary Rules. This certificate has to be presented by the Government servant to the High Commissioner for India, if he is on leave in Europe, North Africa, America or the West Indies and applies for extension of leave, or for permission to return to duty or for a last-pay certificate before returning to duty.

NOTE.—Whenever a Government servant is proceeding to a Dominion or Colony which does not account directly to India, a duplicate copy of the certificate in Form II under the Supplementary Rules should be sent to the High Commissioner with the duplicate copy of the Colonial leave-salary warrant (*vide* paragraph 16).

19. *Deleted.*

20. With every leave-salary certificate, Colonial leave-salary warrant or certificate of leave, given to Government servants to whom the leave rules in Sections I to V of Chapter X of the Fundamental Rules are not applicable a blank F. R. Form No. 7 will be given on which the Government servant concerned will report to the Audit Officer, from the first port at which the vessel touches, the day of his departure from India.

21. As soon as an Audit Officer has delivered a leave-salary certificate, certificate of leave or a Colonial leave-salary warrant to a Government servant who proposes to spend his leave out of India, or has caused it to be sent to the address specified by him, he must forward a copy of the leave-salary certificate or certificate of leave, or the duplicate copy of the Colonial leave-salary warrant to the High Commissioner for India.

22. *Deleted.*

23. *Amended Certificate.*—If it becomes necessary to amend a leave-salary certificate in F. R. Form No. 2, the amendment should take the form of a short corrigendum worded so as to show only the particular item or items in which alterations have been made: this corrigendum should be forwarded by the Audit Officer at the earliest possible date to the High Commissioner for India. Every corrected leave-salary certificate, whether original or duplicate, should be marked "Amended Certificate".

24. *Extension or commutation of leave.*—Whenever the leave of a Government servant absent on leave out of India elsewhere than in Europe, North Africa, America, or the West Indies is extended or commuted by the authority in India which granted the leave, the fact should forthwith be notified by the Audit Officer to the High Commissioner for India to enable him to check the payment by Colonial Treasurers or Staff Officers.

NOTE.—This rule applies to Military Officers subject to the Military Leave Rules.

25. If the leave of a Government servant who draws his leave-salary in India under the provisions of Fundamental Rule 91 is extended or commuted, the Audit Officer who audited his pay at the time he proceeded on leave must, on receiving advice of such extension or commutation, forthwith communicate it to the Audit Officer within whose jurisdiction his leave-salary is drawn. He should also communicate any other circumstances connected with the leave which may be required to be known to the Audit Officer who passes the Government servant's leave-salary.

26. *Issue of a fresh Colonial leave-salary warrant.*—When no space for the entry of endorsements of payments remains upon the back of a Colonial leave-salary warrant, or when a warrant is lost or destroyed, a fresh warrant should be issued by the Audit Officer who issued the original warrant on the application of the Government servant concerned submitted through the Colonial Disbursing Officer.

27. *Return to duty.*—A Government servant who was on leave in Europe must, on return to India, deliver to the Audit Officer the last-pay certificate obtained by him from the High Commissioner before he can obtain payment of any arrears of leave-salary or pay due to him. A Government servant who has drawn his leave-salary on a warrant must deliver his copy of the warrant, which will serve as a last-pay certificate.

28. *Railway and Military Accounts Departments.*—Changes in the above rules, except those which relate to Colonial leave-salary warrants, may be made by the Controller of Railway Accounts, or the Military Accountant-General in accordance with the special rules of his own department.

Special Rules relating to Military Officers.

29. As soon as the grant of furlough or leave to a Military Officer in Civil employ has appeared in orders, the Audit Officer from whose payment the Officer is transferred to the Civil Department must, in the case of furlough to Europe, North Africa, America or the West Indies, forward to the High Commissioner for India a statement of the officer's service in such form as the Military authorities may prescribe. This statement is not required in the case of officers proceeding on furlough under the Staff or British Leave Rules.

30. When furlough or leave or an extension of furlough or leave is granted to a Military Officer in Civil employ, whether subject to the Civil or the Military Leave Rules, the Civil Audit Officer should intimate to the Audit Officer from whose payment the officer is transferred to the Civil Department the date of the beginning and end of the furlough or leave, the dates of embarkation and debarkation in the case of furlough out of India, as well as those of being struck-off or of resuming duty.

31. *Deleted.*

32. On the return of an officer from furlough or leave, it will be the duty of the Audit Officer in charge of his record of pension service to satisfy himself that he has returned within his leave; and, if not, to report the case to the authority which sanctioned the leave.

Leave Account.

33. The leave account prescribed in Fundamental Rule 76 should be kept in F. R. Forms No. 9 and No. 9-A. in respect of Government servants under the Special Leave Rules and Ordinary Leave Rules respectively. The office in which the account should be kept for any Government servant and the person by whom the entries should be attested will be such as are prescribed by the local Government.

The leave accounts of permanent piece-workers and of permanent salaried industrial employees (below the grades of Overseer and Assistant Manager) in the Government of India presses, who are not classed as "Inferior", should be kept in F. R. Forms 9-B and 9-C respectively.

NOTE.—A leave account in the subjoined form has been prescribed for inferior servants in the Railway Department who do not take leave exceeding one-eleventh of duty.

Leave Account Form.

Duty. 1					Leave earned at 2-11th of duty. 2	Leave equivalent to 1-11th of duty (i.e., half of the period shown in column 2). 3	Leave taken. 4	Balance of leave equivalent to 1-11th of duty (columns 3—4). 5
From.	To	Year.	Month.	Day.				

NOTE.—Care should be taken to see that leave taken does not exceed the period shown in column 3 *plus* the balance shown in column 5.

33-A. In the case of Government servants subject to the " Revised Leave Rules, 1933 ", leave accounts need not be maintained in the forms prescribed in paragraph 33 above, the particulars entered in Service Books or Histories of Services or other records of service being sufficient for the calculation of the amount of leave admissible at any time.

If a Government servant subject to the "Revised Leave Rules" is transferred permanently to another Government, the Audit Officer of the lending Government should draw up a leave account indicating therein the amount of "earned leave" at credit, leave-salary for which should be borne by the lending Government, and send it to the Audit Officer of the borrowing Government. The latter should pass on the debit in regard to leave-salary for "earned leave" up to the extent indicated in the leave account as and when the Government servant takes that leave after permanent transfer to the borrowing Government.

II.—SERVICE BOOKS.

34. A service book in F. R. Form No. 10 should be maintained for every non-gazetted Government servant holding a substantive post on a permanent establishment with the exception of those the particulars of whose service are recorded in a History of Services or in a service register maintained by the Audit Officer, or for whom special forms of record are prescribed by the local Government. In this book every step in the Government servant's official life should be recorded and each entry should be attested by such superior officer as may be prescribed by the local Government.

35. If a Government servant is transferred to foreign service, the Audit Officer referred to in paragraph 5 above will, on receipt of the service book from the head of the office or department concerned, note in it, under his signature, the order sanctioning the transfer, the effect of the transfer in regard to leave admissible during foreign service and any other particulars which he may consider to be necessary, and return the same to the officer from whom he received it. On the Government servant's re-transfer to Government service, the Audit Officer will again note in the service book, under his signature, all necessary particulars concerned with the foreign service. All entries relating to the time spent in foreign service should be attested by the Audit Officer.

F. R. FORM No. 1.

Deleted.

F. R. FORM No. 2.

[See paragraphs 14 and 23 of Instructions.]

(NOTE.—Forms supplied in bound books with counterfoils bear the number 2-A.)

Leave-salary Certificate for leave-salary payable at the Home Treasury.

No.

Leave-salary certificate of of the proceeding

on to

1.	Government under which employed	1.
2.	Substantive post	2.
3.	Officiating post (if any) ..	3.
4.	Statement of present leave ..	4.

Nature of leave (specifying periods on average pay, half average pay, and quarter average pay separately).	Y. M. D.	From	To	Monthly rate of leave-salary (and allowances, if any) subject to the deductions noted on the reverse.	Article and clause of the Fundamental Rules or other Regulations.

5.	Place of payment	5.				
6.	Date from which first payment is to be made.	6.				
7.	Amount (if any) paid in advance	7.				
8.	Government and head of account to which the payment is debitable.	8.				
9.	Date of leaving India ..	9.				
10.	Date on which the Government servant will, during the currency of leave, complete the term of service or attain the age after which, he is required by any rule to retire from the service, as for instance, 55 years of age.	10.				
11.	Period for and terms on which leave may be extended, or commuted otherwise than on extraordinary leave.	11.			Y.	M.	D.
		may be extended $\frac{\text{granted on medical certificate}}{\text{without medical certificate}}$ on same leave-salary by					
	(Further particulars required in the case of Military Officers in Civil employ.)						
12.	Date of commencement of pension service.	12.					
13.	Date of entry under Civil Leave Rules.	13.					
14.	Amount of leave at credit at commencement of present leave.	14.	Earned in respect of service under Military Rules.				
			Earned in respect of service while under Civil Rules.				
15.	Date of being struck off duty	15.					

16. Deductions to be made.

		Rates.	
Indian Civil/Military Service Family Pension for Indian Military Widows' and Orphans' Fund or Superior Services (India) Family Pension Fund Subscription.	For wife/self ..	£	per mensem from
	,, sons ..	£	,, ,, ,,
	,, daughters	£	,, ,, ,,
	Total		,, ,, ,,

A balance of donation on/for £ and interest £ *
is recoverable at £ a month from
General Provident Fund
Indian Civil Service Provident Fund deduction (if any)

(*Signature*)

Place

Date

*In cases of subscribers to India Civil Service Family Pensions and Superior Services (India) Family Pension Fund, interest accrued in India to be given here.

Abbreviations.

M. C.	Medical Certificate.
E. C. A.	Exchange Compensation Allowance.
Y. M. D.	Years, Months, Days.
Art.	Article.

NOTES.

1. Distinguish leave granted on medical certificate from leave granted without medical certificate, and if the leave, though technically of the latter description, was granted in consequence of the production of a medical certificate, or on medical grounds, mention the fact.

2. Except in the case of Chaplains, leave-salary should be stated in whole rupees only a month (fractions being omitted and the next higher rupee taken where the fraction exceeds one-half) and not in pounds a year; and in entering "the rate of leave-salary" it should be stated, in the first place, without reference to the maximum or minimum applicable, and then, if a maximum or minimum applies or if the leave-salary is such that a future change in the current rate of exchange may render a maximum or minimum applicable, the words should be added "subject to a maximum (or minimum) of, etc."

3. The ordinary rate of conversion will be the rate of exchange for telegraphic transfers from Calcutta on London on the day on which each monthly payment is made subject to a minimum rate of 1*s.* 4*d.* per rupee in respect of leave-salary drawn on account of the first four months of leave on average pay and of 1*s.* 6*d.* per rupee in other cases. The maximum rates of leave-salary are those prescribed in Fundamental Rule 89 and the minimum rates those prescribed in Fundamental Rule 90.

4. It must be shown whether a Government servant is entitled to the full amount of leave permitted by the rules.

5. In line 7 the Articles of the Fundamental or other Rules under which the advance is made should be mentioned.

6. The date on which any Government servant will, during the currency of leave, complete the term of service, or attain the age after which by any rule he is required to retire from the service, should be shown in line 10.

7. These rules apply also to leave-salary certificates granted to non-gazetted Government servants when they proceed on leave out of India and draw their leave-salary out of India. In such cases the fact that the Government servant is a non-gazetted Government servant should be noted against entry 2.

8. In preparing the leave-salary certificates of the subscribers under the Indian Military Service Family Pension Regulations and to the Indian Military Widows' and Orphans' Fund, who take leave under the Fundamental Rules, the instructions given in Government of India, Finance Department, No. 914-F. E., dated the 10th May 1922, should also be observed, *viz.*, the leave-salary certificate should show clearly the rate of leave-salary, the monthly maximum of average pay, whether it is likely to become effective or not and the period for which the leave-salary is not subject to the monthly maximum.

9. The following particulars should be noted in line 8 :—

(1) the major, minor and detailed head of account ;

(2) whether debitable to Central or Provincial revenues ; if the latter, the name of the Provincial Government ;

(3) whether the expenditure pertains to a "Reserved" or to a "Transferred" subject ;

(4) whether the expenditure is "voted" or "non-voted."

When the head of account to which the leave salary is debitable during extensions of leave differs from the head to which it was debitable during the period of leave originally granted, this fact should be indicated.

10. In line 11, if the leave granted is less than 22 months, calculations up to 28 months' absence only may be given in the first instance, and as soon as the leave is extended so as to bring the total period of absence from duty to 22 months or more, an amendment to the original leave-salary certificate should be issued at once showing the amount of further leave due on medical certificate beyond 28 months.

11. In the case of Government servants to whom the rules regarding the grant of passages to civilian Personnel of British Domicile engaged for service in India apply, an additional entry should be made showing whether they and their families were given the benefit of Rule VII, and whether they were allowed a similar benefit under either Rule VII or Rule VIII on returning to India.

12. In all English Leave Salary certificates the particulars of all outstanding advances (including passage advances) should be noted under item 16, and in the case of motor car and similar advances the date from which the recovery of monthly instalments should be effected should be stated.

13. With the exception of privilege leave earned in a Civil Department, which should be taken first, a Military Officer in Civil employ may set off the leave he takes against the civil leave or military leave at his credit, as he likes. A definite election in the matter should be obtained from all such officers and the election should be noted in the leave-salary certificate.

14. Where subscriptions or recoveries relate to Sterling Branches of Provident Funds this should be indicated clearly under item 16.

F. R. FORM No. 2-B.

[NOTE.—Forms supplied in bound books with two foils and one counterfoil.]

(*See* paragraph 8 of Instructions.)

No.....of 19 .

Leave-salary Certificate for leave salary payable in India.

Mr.....of the....., having been granted leave for a period of ..... years..... months and ..... days under order No....., dated the....., is hereby allowed to draw his leave-salary from the .....treasury from the .....19 .

2. Monthly rate of leave salary.

Nature of leave, specifying periods on average pay, half average pay and quarter average pay, respectively.	From	To	Y. M. D.	Monthly rate of leave-salary.	Remarks.

3. He may be paid (1) pay from.....to .....at Rupees..... per mensem, and (2) allowances from ..... to ..... at Rupees .....per mensem.

4. The payment should be charged to.....

*5. The following deductions are to be made from the leave salary :—

General Provident Fund.
Postal Insurance Fund.
Income-Tax.
Other deductions, *e.g.*, advances, etc.

†Accountant-General.

Forwarded to .....
Through the .....
Office of the .....
Dated at ..... the .....

Deputy Accountant-General.
Assistant Accountant-General.

F. R. FORM No. 3.

Deleted.

F. R. FORM No. 4.

[*See* paragraphs 15 to 17 of Instructions.]

Audit Officer's letter to the Government servant proceeding on leave out of India.

To

Sir,

With reference to the order noted in the margin, granting you leave out of India, I have the honour to say that it is necessary for you to obtain from me a leave-salary certificate to enable you to draw your leave-salary.

Here enter number and date of the order, name of the authority granting the leave, and page of the gazette in which the leave is notified.

2. To enable me to prepare your leave-salary certificate, it is necessary that you send me the information asked for in the enclosed F. R. Form No. 5 and also your formal certificate of giving over charge of your office, date and hour, at your earliest convenience.

3. If you are in, or intended to pass through (Audit Officer's station), your certificate will be prepared, and your pay and allowances paid up to the date before your leave commences except in the case referred to in paragraph 4 below, on your calling personally at my office, and presenting a last-pay certificate from the officer from whom you last drew your pay and allowances. Otherwise, I shall cause the leave-salary certificate to be sent to the address specified by you, and the pay and allowances to be paid through the officer from whom you draw your pay and allowances.

*Where the deductions relate to Sterling Branches of Provident Funds this should be indicated clearly under item 5.

†The word Deputy or Assistant may, when necessary, be written before "Accountant-General."

4. Leave-salary due for the first four months of leave on average pay taken by itself or in combination with other leave may be drawn either in India or out of India. If you desire to draw it in India, a separate leave-salary certificate for this portion of the leave will be issued, but you will be allowed to draw the pay and allowances for the broken period of the month up to the date of relief only at the commencement of the next month along with the leave-salary for the rest of the month.

5. If you wish to draw your leave-salary in India under the provision of paragraph 4 above, you should either grant your Agents a power-of-attorney or leave your bills ready signed in their custody for presentation as they fall due. A guarantee bond undertaking to refund over-payments should be furnished by your Agents unless they have executed a general bond of indemnity.

NOTE.—(Paragraphs 4 and 5 do not apply to non-gazetted Government servants who have to draw their leave-salary through the Head of the office and should be omitted from the letters addressed to them).

6. I send herewith a copy of a Memo. of Information for the guidance of Government servants proceeding on leave out of India and a blank Form (F. R. Form No. 7) of the date of leaving India to be signed and sent to me from the first port at which your vessel touches.

7. If you wish to draw your leave-salary in a Colony, please send me three specimens of your signature.

Accountant-General.

F. R. FORM No. 5.

[*See* paragraph 15 of Instructions.]

Information required by the Audit Officer before the leave-salary certificate can be drawn up.

(This form should be returned duly filled up to the Audit Officer one clear week before the date of making over charge.)

1.	On what date do you intend to make over charge of your office?	1.
2.	Before or after noon? ..	2.
3.	At what port do you intend to embark? ..	3.
4.	By what ship will you sail, and on what date?	4.
5.	In what country do you wish to draw your leave-salary during leave on average pay for a period not exceeding four months, if any, at the commencement of your leave?	5.
5-A.	In what country do you intend to spend vacation or/and holidays? If out of India, in what country do you intend to draw your pay (and allowances) during vacation or/and holidays?	5-A.
	(*N.B.*—The words within brackets above should be scored out by the audit officer in all cases in which allowances are not payable out of India.)	
6.	What is your address in England or in India or elsewhere to which your leave-salary certificate, to enable you to draw your leave-salary, may be sent, in case it is not handed over to you before you go on leave?	6.

7.	What advance, if any, do you require now?	7.
8.	Do you intend to pay your—Civil Fund subscriptions in England or in India?	8.
9.	Do you wish to subscribe to the General Provident Fund? If so, for what period of your leave and at what rate?	9.

Nos. 3 and 4 are for Government servants to whom the leave rules in Sections I to V of Chapter X of the Fundamental Rules are not applicable.

No. 5. Leave-salary due for the first four months of the period of leave on average pay, if any, at the commencement of any period of leave out of India can be drawn in or out of India at the Government servant's option. In India it can be drawn only on the first of each month in arrears by an authorised agent under a guarantee bond or on production of a life certificate. The allowances for a broken period of a month may be drawn any time after the expiration of the leave.

No. 7 is for Military Officers subject to the Military Leave Rules and for Chaplains only.

No. 8 is for members of the Indian Civil Service only.

NOTE 1.—In the case of non-gazetted Government servants to whom Note 9 to F. R. Form 2 or Note 4 to Form No. I under the Supplementary Rules applies, an additional question should be inserted to obtain the information required under that note.

NOTE 2.—With the exception of privilege leave earned in a Civil Department which should be taken first, a Military officer in Civil employ may set off the leave he takes against the civil leave or military leave at his credit, as he likes. When Form 5 is sent to such an officer question 10 should be added in manuscript. 'Is the leave to be set off against the military leave or against civil leave at your credit ?' The answer should be noted on his leave-salary certificate.

NOTE 3.—Where subscriptions or recoveries relate to Sterling Branches, this should be indicated clearly against question 9.

Dated at } (Signature.)

The of 19 . } (Designation.)

To the Accountant-General.

F. R. FORM No. 6.

Deleted.

F. R. FORM No. 7.

[*See* paragraph 20 of Instructions.]

Report of actual sailing.

From

To

The Accountant-General.

Sir,

I have the honour to report that I sailed from India by the steamer—

Class which left on day the 19 .

I have, etc.,

(Signed)

Noted and forwarded to the Secretary to the Government of Department.

The 19 .

Accountant-General.

F. R. FORM No. 8.

Deleted.

F. R. FORM No. 9.

[*See* paragraph 33 of Instructions.]

Leave account of

Duty.					Leave earned.			Leave at credit 2+7.			Leave taken.															Balance (3—6).			Signature of attesting officer.
											On average pay.					On half or quarter average pay.													
																		Actual period (*a*).			Period converted to leave on average pay (*b*).			Total 4+5 (*b*).					
1					2			3			4					5									6			7			8
From	To	Y.	M.	D.	Y.	M.	D.	Y.	M.	D.	From	To	Y.	M.	D.	From	To	Y.	M.	D.	Y.	M.	D.	Y.	M.	D.	Y.	M.	D.	

Instructions.

(1) The account is to be maintained in terms of leave on average pay.

(2) In the case of Government servants already in Government service, the first entries, *i.e.*, the entries that will be made on 1st January 1922, or from the date on which the Government servant concerned elects to come under the Fundamental Rules, will be in columns 3, 4 and 5, the entries to be made in accordance with Fundamental Rules 77 and 78.

(3) When a Government servant applies for leave, columns 1 to 3 are to be filled up for arriving at the leave at his credit. The period of leave shown in column 3 should be arrived at by adding the new entry in column 2 to the last previous entry in column 7.

(4) When a Government servant returns from leave, columns 4, 5, 6 and 7 will be filled up. The portion of the leave on half or quarter average pay (together with the leave on subsistence grant under the Note to Rule 86) will be entered in column 5 (*a*), and this period divided by 2 is the entry to be made in column 5 (*b*).

(5) The maximum prescribed in Fundamental Rule 81 (*a*) will be applied to the totals of the periods in column 6, while the maximum in Fundamental Rule 81(*b*) should be applied to the totals of the periods in column 4.

(6) If a Government servant passes from under the ordinary to the special leave rules a new leave account must be opened.

(7) When a Government servant is transferred for service under another Government a separate account should be opened in this form for showing the leave earned under that Government and the leave the cost of which is debited to that Government. This account will be in addition to the main leave account, which must be a complete record of all leave earned and taken under these rules throughout his service.

F. R. FORM No. 9A.

(Ordinary Leave Rules.)

Leave Account of———.

Date of commencement of service———.

Date of contract, if any———.

Date of attaining the age of $\frac{55}{60}$ years———.

Date of coming under Civil Leave Rules———.

Duty.			Leave earned.		Leave at credit.		Leave taken.						Balance. (On return from leave-)			Remarks.
							On average pay.			On half or quarter average pay.						
			1/11th of duty subsequent to coming under Fundamental Rules. [Rule 81 (b) (66).]	Balance of 2/11th of duty subsequent to coming under Fundamental Rules	1/11th of duty subsequent to coming under Fundamental Rules. Rule 81 (b) (66) (Columns 16+4).	Balance of 2/11th of duty subsequent to coming under Fundamental Rules. (Columns 17+5).	Dates.	Against entries in column 6.	Against limit of one year for leave on m. c. and leave spent elsewhere than in India or Ceylon. [Proviso to Rule 81 (b) (66).]	Dates.	Actual period.	Actual period converted into terms of leave on average pay.	Total (columns 10+11+14).	Of leave equivalent to 1/11th of duty subsequent to coming under Fundamental Rules. [Rules 81 (b) (66)] (Columns 6+10).	Of leave equivalent to balance of 2/11th of duty subsequent to coming under Fundamental Rules. (Column 7) (Columns 11+14).	Total Columns (8+15).	
1	2	3	4	5	6	7	9	10	11	12	13	14	15	16	17	18	19
Government served under.	From	To	y. m. d.	y. m. d.	y. m. d.	y. m. d.	From	To	y. m. d.	From	To	y. m. d.	y. m. d.	y. m. d.	y. m. d.	y. m. d.	

Instruction for filling up Form No. F. R. 9-A.

1. The Account is to be maintained in terms of leave on average pay. For this purpose, actual periods of leave taken on half or quarter average pay as entered in column 13 should be divided by 2 and posted in column 14.

2. In the case of officers who were subject to the Civil Service Regulations leave rules before they elected the Fundamental Rules, the account should commence with an opening entry in columns 4, 5, 6, 7, 8, 11, 13, 14, 15, 16, 17 and 18. The words "Due on (date of coming under the Fundamental Rules)" should be written across columns 1, 2 and 3 and against these words credit under Rule 77 (*b*) (*ii*) (1) should be given in column 4 and column 6 and that under Rule 77 (*b*) (*ii*) (2) and Rule 77 (*e*) in column 5 and column 7, while debit for commuted furlough taken under the old leave rules should be given in column 11 and that under Rule 78, Note (2) (*i*) (*a*), in column 13, one half of the latter being entered in column 14. The sum total of the entries in columns 6 and 7 and in columns 11 and 14 should be entered in columns 8 and 15 respectively. The difference between the entries in columns 8 and 15 should be entered in column 18 and the entry in column 4 or 6 should be repeated in column 16, while the entry in column 5 or 7 *minus* the sum total of the entries in columns 11 and 14 should be shown in column 17.

3. When a Government servant applies for leave, columns 1 to 8 should be filled up. Columns 1, 2 and 3 should show the Government served under and the period of duty up to the date preceding that on which the Government servant intends to go on leave, and columns 4 and 5 should each show 1/11th of this period (but see Note 2 below), the sum total of the two entries representing the period of leave (*i. e.*, 2/11ths of duty) earned under Rule 77 (*b*) (*ii*) (3). To the new entry in column 4 should be added the last entry in column 16 and the resultant figure should be posted in column 6; similarly to the new entry in column 5 should be added the last entry in column 17 and the resultant figure should be posted in column 7. The total of the entries in columns 6 and 7 will be shown in column 8.

NOTE 1.—If during the period of duty prior to a Government servant's going on leave he has served under two or more Governments, the period of duty and the leave earned under each Government should be shown in separate lines in columns 1 to 5 and the sum total of the new entries in column 4 and the last entry in column 16 should be posted in column 6 and of those in column 5 and the last entry in column 17 in column 7, the total of the entries in columns 6 and 7 being shown in column 8.

NOTE 2.—The sum total of the entries in column 5, inclusive of the opening entry mentioned in instruction No. 2 should not exceed $2\frac{1}{2}$ years [Rule 81 (*a*) (*ii*)], and no entry should be made in this column when this limit of $2\frac{1}{2}$ years is reached.

When columns 1 to 8 have been posted, column 8 will show the *maximum* amount of leave which may be granted *in terms of leave on average pay* [but see Rule 81 (*d*)] to a Government servant on the date on which he intends to go on leave. The *maximum* amount of leave *on average pay* which may be granted on that date with medical certificate or out of India and Ceylon will be the sum total of the last entry in column 6, and the unspent balance of "one year" limited to 8 months at a time, provided this sum total is covered by the period entered in column 8; in the case of leave in India or Ceylon without medical certificate, the maximum will be the last entry in column 6, limited to 4 months at a time. The limits of 8 and 4 months may be exceeded as provided in the note to Fundamental Rule 81(*b*).

4. When a Government servant returns from leave, columns 9 to 18 should be filled up. The period of leave taken on average pay should be entered in columns 9, 10 and 11, that taken on medical certificate or spent elsewhere than in India or Ceylon should be entered in column 11 till the limit of one year is reached and thereafter in column 10. The actual periods of leave on half or quarter average pay (together with leave on subsistence grant under the Note to Fundamental Rule 88) and overstayal of leave (*vide* Fundamental Rule 73) should be entered in column 13 and one half of it in column 14.

NOTE 1.—Leave on average pay taken under the Fundamental Rules in India without medical certificate in excess of the last entry in column 6 before the deletion of "*plus* 1 year" from Rule 81 (*b*) (*ii*) should be entered in column 11.

NOTE 2.—If the leave taken on half average pay exceeds the amount at credit on half average pay, the excess should be shown in red ink in column 17. If this debit shown in column 17 exceeds the credit, if any, shown in column 16, the net debit in column 18 will be recorded in red ink. The entry in column 18 is the leave due under Fundamental Rule 80. The balance of leave due on average pay shown in column 16 remains unaffected by any debit entries in columns 17 and 18, but cannot be utilised until, under the operation of Fundamental Rules 77 and 81(*c*) leave again becomes due under Fundamental Rule 80 and then only to the extent of the leave due.

5. The total period of leave in terms of leave on average pay taken in a Government servant's whole service as entered in column 15 should not exceed the privilege leave credited to him in column 4 on his coming under the Fundamental Rules, *plus* all periods or leave subsequently entered in that column, *plus* 2½ years.

6. When a Government servant is transferred to service under another Government, a separate account should be opened in F. R. Form No. 9 for showing the leave earned under that Government and the leave the cost of which is debited to that Government. This account will be in addition to the main leave account, which must be a complete record of all leave earned and taken under these rules throughout his service.

F. R. FORM

[*See* paragraph 33

Leave Account Form for permanent piece-workers employed in the Govern
II to the Government of India, Finance Department,

Leave Account of.....

Date of commencement of service.....

Length of service (completed years of service with date of completion).	Leave permissible.	Leave on average pay. Leave taken. Calendar year.	From	To	Period.			Progressive total for the calendar year.			Leave on half average. Duty. From	To	Period.			Leave earned at 1/11th of duty.		
					Y.	M.	D.	Y.	M.	D.			Y.	M.	D.	Y.	M.	D.
1	2	(i)	(ii)	(iii)	(iv)			(v)			4	5	6			7		

NOTES.—(i) In calculating the length of service the period of continuous temporary establishment shall be taken into account.

(ii) Gazetted holidays counted against leave under rule I (c) of Annexure II

No. 9-B.

of Instructions.]

ment of India Presses who are not classed as "inferior" (vide *Annexure Resolution No. F. 119-R. I./28, dated the 6th September 1928*).

Date of birth.....

Date of attaining the age of $\frac{55}{60}$ years.....

pay on medical certificate.								Injury leave taken on half pay.			Total leave during service (to be limited to 5 years during whole service).			Remarks.
Total including balance col. 12 + col. 7.	Leave taken.							From	To	Period (limited to 2 years for each disability).				
	From	To	Period limited to one year at a time including leave taken in column 3(*b*).			Balance.								
8	9	10	11			12		13	14	15	16			17
Y. M. D.			Y.	M.	D.	Y.	M. D.			Y. M. D.	Y.	M.	D.	

service rendered by a press worker up to the date of his being brought on to permanent

to the Finance Department Resolution mentioned above should be entered in red ink

F. R. FORM

[*See* paragraph 33

Leave Account form for permanent salaried Industrial Employees in the Govern Manager who are not classed as "inferior" (vide *Annexure I to dated 6th September 1928*).

Leave Account of.....

Date of commencement of service.....

Leave on average pay.

Duty.					Leave earned at 1/11th of duty.			Total leave at credit not exceeding 4 months on any particular date (columns 9+4).			Leave taken.				
From	To	Period.									From	To	Period.		
1	2	3			4			5			6	7	8		
		Y.	M.	D.	Y.	M.	D.	Y.	M.	D.			Y.	M.	D.

No. 9-C.

of Instructions.]

ment of India Presses below the grade of Overseer or Assistant Government of India, Finance Department, Resolution No. F.-119-R.-I./28,

Date of birth.....

Date of attaining the age of 55/60 years.....

Balance (columns 5—8).			Leave on half average pay on medical certificate.			Injury leave taken on half pay.				Remarks.
			From	To	Period (limited to six months at a time in 2 instalments of 3 months each and to 2 years in whole service).	From	To	Period (limited to 2 years for each disability).	Total leave during service (to be limited to 5 years during whole service).	
9			10	11	12	13	14	15	16	17
Y.	M.	D.			Y. M. D.			Y. M. D.	Y. M. D	

F. R. FORM No. 10.

[*See* paragraph 34 of Instructions.]

Service Book.

Space should be provided on the reverse of the title page of the service book to record thumb and finger impressions of (non-gazetted) Government servants under the following heading :--

"Thumb and finger impressions of (non-gazetted) Government servant."

The opening page of the service book should contain the folllowing :–

(1) Name.

(2) Race.

(3) Residence.

(4) Father's name and residence.

(5) Date of birth by the Christian era as nearly as can be ascertained.

(6) Exact height by measurement.

(7) Personal marks for identification.

(8) Signature of Government servant

(9) Signature and designation of the head of the office or other attesting officer.

NOTE.—The entries in this page should be renewed or re-attested at least every five years and the signature in lines (8) and (9) should be dated Finger prints need not be taken afresh every five years under this rule

The remaining folios of the service book should be divided into fifteen columns, *viz.*:—

(1) Name of post.

(2) Whether substantive or officiating, and whether permanent or temporary.

(3) If officiating, state

(*i*) Substantive appointment, or

(*ii*) whether service counts for pension under Article 371, Civil Service Regulations.

(4) Pay in substantive post.

(5) Additional pay for officiating.

(6) Other emoluments falling under the term " Pay ".

(7) Date of appointment.

(8) Signature of Government servant.

(9) Signature and designation of the head of the office or other attesting officer in attestation of columns 1– 8.

(10) Date of termination of appointment.

(11) Reason of termination (such as promotion, transfer, dismissal, etc.).

(12) Signature of the head of office or other attesting officer.

(13) Leave—

(*i*) Nature and duration of leave taken.

(*ii*) Allocation of periods of leave on average pay up to four months for which leave salary is debitable to another Government—

(*a*) Period.

(*b*) Government to which debitable.

(14) Signature of the head of the office or other attesting officer.

(15) Reference to any recorded punishment or censure, or reward or praise of the Government servant.

FORM No. I.—UNDER THE SUPPLEMENTARY RULES.

[*See* paragraphs 14 and 16 of Instructions.]

Colonial Leave-salary Warrant.

Debitable to $\frac{\text{Civil}}{\text{Military}}$ estimates.

(For I. C. S. and Military Officers in Civil Employ.)

(*Obverse.*)

Warrant No. of 19 .

Mr.

having been granted leave for a period of months and days under the orders of the Government of is hereby allowed the privilege of drawing his leave-salary at from

2. His leave-salary will be as shown below and will be payable monthly in sterling converted from rupees at 1*s.* 6*d.* a rupee but will be subject to the following *maxima* and *minima* :—

Period.	Rate in rupees a month.	Minimum rate of exchange.	Minimum £ a month.	Maximum £ a month.
From.....to.....				
From.....to.....				
From.....to.....				

3. The payment should be charged to the High Commissioner for India for appropriation by him of the leave-salary under the following heading :—

4. The following deductions are to made from the leave-salary of each month before payment :—

			Rates.
Indian Civil / Military Service Family Pension ..	for wife	£	per mensem from
	for self	£	,,
Indian Military Widows' and Orphans' ..	,, sons	£	,,
Fund subscription	,, daughter	£	,,
	Total	£	

A balance of donation $\frac{\text{on}}{\text{for}}$ £ and interest £* is recoverable at £ a month from

Indian Civil Service Provident Fund Deductions (if any)

Where the amount of a deduction is expressed in rupees, it shall be converted into sterling at the same rate as the leave-salary from which it is deducted.

Dated at

The 19 .

Accountant-General.
Comptroller.

* In case of subscribers to the Indian Civil Service Family Pension Fund, interest accrued in India to be given here.

(*Reverse.*)

Name, rank and description of payee.	Period for which payment is made.	Monthly rate.	Amount.	Signature of paying officer.	Receipt of payee.
		£ s. d.	£ s. d.		

One copy of this Warrant will be retained by and will be given up to the Audit Officer in India on his return to India. Each

payment will be recorded on the reverse of the copies kept by the Colonial Disbursing Officer and by
and will be certified by the paying officer and receipted by .

NOTE 1.—Leave-salary is payable in rupees to Government servants residing in Ceylon during their leave (Fundamental Rule 91).

NOTE 2.—The signature of the Government servant concerned should be obtained on the "original" copy of the warrant.

NOTE 3.—The rate of conversion will be 1*s.* 6*d.* a rupee.

The maximum rates of leave-salary are those prescribed in Fundamental Rule 89 and the minimum rates those prescribed in Fundamental Rule 90.

NOTE 4.—In the case of Government servants to whom the rules regarding the grant of passages to civilian Personnel of British Domicile, engaged for service in India, apply, an additional entry should be made showing whether they and their families were given the benefit of Rule VII, and whether they were allowed a similar benefit under either Rule VII or Rule VIII on returning to India.

NOTE 5.—The paying officer, except in the case of a Dominion or Colony which accounts direct to India, is requested to advise the High Commissioner for India, India House, Aldwych, London, W. C. 2, promptly on the officer's departure from such Dominion or Colony, whether for India, England or any other Dominion or Colony, giving particulars of amounts of pay issued and of any deduction therefrom.

NOTE 6.—The particulars of all outstanding advances (including passage advances) should be noted under item 4. In the case of motor-car and similar advances, the date from which the recovery of monthly instalments should be effected should be stated.

FORM No. I-A.—UNDER THE SUPPLEMENTARY RULES.

Colonial Leave-salary Warrant.

Debitable to $\frac{\text{Civil}}{\text{Military}}$ estimates.

(For Uncovenanted Services.)

(*Obverse*)

Warrant No. of 19 .

Mr.

having been granted leave for a period of months and days under the orders of the Government of is hereby allowed the privilege of drawing his leave-salary at from .

2. His leave-salary will be as shown below and will be payable monthly in sterling converted from rupees at 1*s.* 6*d.* a rupee but will be subject to the following *maxima* and *minima* :—

Period.	Rate in rupees a month.	Minimum rate of exchange.	Maximum.	Minimum.
			£ a month.	£ a month.
From.....to.....				
From.....to.....				
From.....to.....				

3. The payments should be charged to the High Commissioner for India for appropriation by him of the leave-salary under the following heading :—

4. The following deductions are to be made from the leave-salary of each month before payment :—

Superior Services (India) Family Pension Fund—

Rates.

Wife	..	..	..	Per month from
Sons	..	..	..	Do.
Daughters	..	..	..	Do.
Arrears, if any	..	..	..	..
Interest	..	..	..	..

Where the amount of a deduction is expressed in rupees, it shall be converted into sterling at the same rate as the leave-salary from which it is deducted.

Accountant-General.
Comptroller.

Dated at
The 19 .

(*Reverse.*)

Name, rank and description of payee.	Period for which payment is made.	Monthly rate.	Amount.	Signature of paying officer.	Receipt of payee.
		£. s. d.	£. s. d.		

One copy of this warrant will be retained by and will be given up to the Audit Officer in India on his return to India. Each payment will be recorded on the reverse of the copies kept by the Colonial Disbursing officer and by and will be certified by the paying officer and receipted by .

NOTE 1.—Leave-salary is payable in rupees to Government servants residing in Ceylon during their leave (Fundamental Rule 91).

NOTE 2.—The signature of the Government servant concerned should be obtained on the "original" copy of the warrants.

NOTE 3.—The rate of conversion will be 1*s.* 6*d.* The maximum rates of leave salary are those prescribed in Fundamental Rule 89 and the minimum rates those prescribed in Fundamental Rule 90.

NOTE 4.—In the case of Government servants to whom the rule regarding the grant of passages to civilian Personnel of British Domicile engaged for service in India apply, an additional entry should be made showing whether they and their families were given the

benefit of Rule VII, and whether they were allowed a similar benefit under either Rule VII or Rule VIII on returning to India.

NOTE 5.—The paying officer, except in the case of a Dominion or Colony which accounts direct to India is requested to advise the High Commissioner for India, India House, Aldwych, London, W. C. 2, promptly on the officer's departure from such Dominion or Colony, whether for India, England or any other Dominion or Colony, giving particulars of amounts of pay issued and of any deductions therefrom.

NOTE 6.—The particulars of all outstanding advances (including passage advances) should be noted under item 4. In the case of motor-car and similar advances, the date from which the recovery of monthly instalments should be effected should be stated.

FORM No. 11 - UNDER THE SUPPLEMENTARY RULES.

Certificate of Leave.

Granted to

proceeding out of India.

1. Government under which employed.	
2. Post last held.	
3. Nature of leave granted.	
4. Date of commencement of leave.	
5. Date of expiry of leave.	
6. Whether a medical certificate of fitness must be produced before return to duty.	
7. Amount of leave, expressed in terms of leave on average pay, at the Government servant's credit on the expiry of the present leave.	
8. Period of leave on average pay which might under Fundamental Rule 81 be granted if the present leave were extended. (Further particulars required in the case of Military Officers in Civil employ).	
9. Date of entry under Civil leave rules.	
10. Amount of leave at credit at commencement of present leave :—	
Earned in respect of service under Military rules.	
Earned in respect of service under civil rules.	

The 19 . { (Signature)
(Designation).

NOTE 1.—No leave-salary is payable on this certificate.

NOTE 2. This certificate must be produced before the High Commissioner with any application for an extension of leave or permission to return to duty or the grant of a last-pay certificate.

Memorandum explaining how the existing orders in the several articles in the Civil Service Regulations have been dealt with in the instructions issued by the Auditor-General under Fundamental Rule 74.

1. *Paragraph 1.*—This includes the provisions contained at present in clauses (*a*) and (*d*) of Article 841 of the Civil Service Regulations. Under the existing system of audit it is necessary that the Audit Officer should certify the admissibility of the leave before it is sanctioned. The provision has, therefore, been retained as an instruction of the Auditor-General.

2. *Paragraph 2.*—This order is not based on any rule at present included in the Civil Account Code or the Civil Service Regulations. A similar rule is, however, included in some departmental codes (*e.g.*, paragraph 109, Public Works Department Code), and is followed in practice in all civil offices. Only leave which is admissible can be sanctioned and the admissibillity of the leave can be verified only by a reference to the leave account. It is considered that an explicit rule to this effect should be contained in the authorised instructions.

3. *Paragraph 3.*—This provides for the orders in the note under Rule 1 below clause (*i*) of Article 314, Civil Service Regulations.

4. *Paragraph 4, clause* (*a*).—The provision in this clause is intended to replace the orders contained in Articles 855-A and 856, Civil Service Regulations. The orders as they stand are very complicated and prescribe different sets of procedure for different kinds of officers. It would be sufficient if all the applications are required to be sent to the Civil Audit Officer who will when necessary, consult the Military Audit Officers. Clause (*b*) provides for the orders contained at present in Articles 856 (*c*), 860, the Note under 871 and 875. As the Civil Audit Officer has to consult the Military Controller he can obtain the certificate at the same time.

5. *Paragraph 5.*—This reproduces the portion of the orders in Article 780, Civil Service Regulations, which is essential for purposes of audit.

6. *Paragraph 6.*—Article 865 prescribes the locality in which the leave-salary of a non-gazetted Government servant should be drawn and the conditions which should be observed before it can be paid. Orders regarding locality cannot be issued as part of audit requirements and so paragraph 6 only prescribes the other conditions contained in Article 865. The general orders framed by the Governor General in Council under rule 16 of the Devolution Rules include a provision to the effect that the leave-salary of a non-gazetted Government servant paid in India should be drawn only in that district in which his pay could be drawn if he were on duty.

7. *Paragraph 7.*—This reproduces that portion of the orders in Article 874 which relates to payment of leave-salary in India. The term "office of payment" has been substituted for "treasury" so that the rule may be applied even in the case of those departments which make their own payments, *e.g.*, by cheques.

8. *Paragraph 8.*—This reproduces the orders in Article 878, except that the provision that a certificate is necessary only when the Government servant proceeds from one place to another has been cancelled because an authority from the Audit Officer specifying the leave-salary permissible is necessary in all cases. A clause has also been added at the end of this paragraph to the effect that, when the Government servant desires to change the office of payment, a fresh leave-salary certificate must be otained from the Audit Officer within whose jurisdiction his last pay was drawn. This clause is taken from Article 887. As the instructions apply also to cases of Government servants on leave in India, they have been included in this paragraph.

9. *Paragraph 9.*—This reproduces the orders in Article 864, Civil Service Regulations.

10. *Paragraph 10.*—This provides for the procedure laid down in Fundamental Rule 91, by which Government servants who reside in Asia during their leave have to draw their leave-salary in India. The note under the paragraph is an audit requirement.

11. *Paragraph 11.*—Is intended to preserve the special procedure obtaining at present in these departments which is safeguarded by Article 866, Civil Service Regulations.

12. *Paragraph 12.*—A last-pay certificate has to be produced by a Government servant who has to draw arrears of leave-salary or pay due under Article 41, Civil Account Code, Volume I (8th edition).

13. *Paragraph 13.*—This reproduces the orders in Article 775-A, Civil Account Code, Volume II (7th edition).

14. *Paragraph 14.*—This reproduces part of the orders in Article 874, Civil Service Regulations, relating to the issue of a leave-salary certificate to those who desire to draw their leave-salary at the Home treasury, and part of the orders in Article 888, Civil Service Regulations, relating to the issue of a Colonial warrant, with this difference that the Audit Officer who audits the pay of a Government servant is required to issue the Colonial leave-salary warrant in the place of Audit Officers at the ports of embarkation in India or Burma who were formerly issuing the warrants as stated in Article 888, Civil Service Regulations. The issue of a separate leave-salary certificate by the Audit Officer concerned as specified in Article 881 becomes unnecessary, as he will himself issue a Colonial leave-salary warrant. A clause has been added to this rule providing for cases in which a gazetted Government servant may wish to draw his leave-salary in India during the first four months of leave on average pay. In these cases a leave-salary certificate, such as is ordinarily issued to a Government servant, drawing his leave-salary in India, should be issued to cover the period during which the Government servant wishes to draw his leave-salary in India. This rule does not provide for non-gazetted Government servants proceeding on leave out of India, as their cases are covered by paragraph 6 of these Instructions.

15. *Paragraph 15.*—This provides for the orders in Article 880, Civil Service Regulations. The note under the article is taken from Article 775, Civil Account Code, Volume II (7th edition).

16. *Paragraph 16.*—Reproduces part of the orders in Article 881 which are not included in paragraph 14, as well as part of the orders in Article 889. The existing orders require that the Government servant going on leave out of India should be paid up to the day before he leaves India.

These orders apply to the case of Government servants who proceed on leave to which no privilege leave is prefixed. When the Government servant goes on privilege leave or on combined leave, he is allowed to draw his allowances in England from the commencement of such leave. In future it would be simpler to have the leave-salary due from the commencement of the leave paid in England, if the Government servant so chooses, in all cases, subject to the conditions in Fundamental Rule 91. This rule accordingly provides that the Government servant should be paid up to the date of his relief.

17. *Paragraph 17.*—This reproduces the orders in Article 882, except that it is provided that the Government servant should be paid up to the date of his relief and not up to the date of his sailing.

18. *Paragraph 18.*—This is taken from Articles 872 and 873, Civil Service Regulations.

19. *Paragraph 19.*—This is in accordance with Article 904, Civil Service Regulations.

20. *Paragraph 20.*—This reproduces the orders in Article 883, Civil Service Regulations. As, under Fundamental Rule 68, the leave of a Government servant commences on the day on which transfer of charge is affected and does not depend upon the date of departure of the vessel in which the Government servant sails, the report of actual sailing is not required in the case of those to whom the rules in sections I to V of Chapter X of the Fundamental Rules are applicable.

21. *Paragraph 21.*—This provides for the orders in Article 884 and part of Article 889. "The High Commissioner for India" has been substituted for the "Secretary of State" and "India Office" as the former officer is now making payments of leave-salary in England.

22. *Paragraph 22.*—This reproduces the orders in Article 885, Civil Service Regulations.

23. *Paragraph 23.*—This provides for the orders in Article 898 (*a*), Civil Service Regulations.

24. *Paragraph 24.*—This is taken from the latter part of Article 300, Civil Service Regulations.

25. *Paragraph 25.*—This is a reproduction of the orders in Article 877, Civil Service Regulations.

26. *Paragraph 26.*—This is a part of the orders in Article 889, Civil Service Regulations.

27. *Paragraph 27.*—This is taken from Articles 886 and 890, Civil Service Regulations.

28. *Paragraph 28* is taken from Article 876, Civil Service Regulations.

29. *Paragraphs 29 to 32* are taken from Articles 855, 857 (*b*) and (*c*) and 611, Civil Service Regulations.

30. *Paragraph 33.*—This is a necessary record for purposes of reference.

31. *Paragraphs 34 and 35.*—These rules indicate the form in which records of service of non-gazetted Government servants should be maintained and the procedure that should be followed in maintaining them.

F. R. FORM No. 5-A.

Memorandum of information for the guidance of Government servants proceeding on leave out of India.

1. *Report of sailing.*—If a certificate of departure accompanies this memorandum, the Government servant should sign, stamp and post it to the Audit Officer from whom the memorandum is received.

2. *Date of commencement of leave.*—Leave begins on the day on which transfer of charge is effected, or, if charge is transferred after noon, on the following day.

3. *Leave-salary certificate for payment in India.*—Under Fundamental Rule 91 a Government servant may draw in India the leave-salary of the first part of any period of leave on average pay up to a maximum of four months, whether such leave be taken by itself or at the commencement of a longer period of leave. When a Government servant on leave out of India exercises this option and desires to draw his leave-salary in India—

(1) his pay and allowances up to the date preceding that on which his leave commences are payable in India under the usual rules; and

(2) if he is a gazetted Government servant, he must inform the Audit office, which audits his pay in his last post, through a form which will be received from it, from what treasury he wishes to draw his leave-salary and through what agency.

4. *Leave-salary certificate for payment at the Home Treasury.*—In cases not falling under paragraph 3 above—

(1) the pay and allowances of the Government servant will be paid to him before he leaves India and the Audit Officer who audits his pay in his last post will arrange for this; and

(2) the Government servant must take with him a leave-salary certificate to enable him to draw his leave-salary from the Home Treasury.

If the certificate cannot be prepared in time, or if a Government servant proceeding on leave to Europe is compelled to leave without a certificate, it will be forwarded to him to any address which he may leave.

5. *Colonial leave salary warrant for payment of leave-salary in a Colony.*—If a Government servant intends to draw his leave-salary in any of His Majesty's Colonies, the Audit Officer who audits his pay in his last post will furnish him with a warrant addressed to the Colonial officer only on condition that any fund subscriptions due from him shall either be paid in advance or taken by deduction; in the latter case the warrant to the Colony will show only the net amount payable after such deduction.

6. *Leave on medical certificate.*—A Government servant taking leave out of India on medical certificate should take with him one copy of the Medical Report upon his case, and be prepared to produce it before the Medical Board at the India Office if required to do so.

7. *Certificate of leave necessary in certain cases.*—If a Government servant proceeds on extraordinary leave out of India, or on leave on average pay out of India during which he does not propose to draw leave-salary, or if a Government servant proceeds to a Colony, he should obtain a certificate of leave in Form No. II under the Supplementary Rules from the Audit Officer who audits his pay in his last post. This certificate has to be presented by the Government servant to the Secretary of State or the High Commissioner for India if he is on leave in Europe, North Africa, America or the West Indies and applies for extension of leave or for permission to return to duty or for a last-pay certificate before returning to duty.

8. *Subscriptions to Funds.*—Subscriptions on account of the Bengal, Bombay and Madras Civil Funds, and the Bengal and Madras Service Family Pension Fund may be paid either in India or in England at the option of the subscriber and arrangement should be made for such payment by the subscriber. In the case of Military Officers in Civil employ subscriptions on account of Indian Military Service Family Pension Fund will be deducted from the leave-salary of the

officers concerned. Officers should see that the necessary deductions are made. Premia and subscriptions on Postal Insurance policies and contracts for monthly allowances, subscriptions for the Bengal Uncovenanted Service Family Pension Fund, the Bombay Family Pension Fund of Government servants, the General Family Pension Fund and the Hindu Family Annuity Fund are not payable in England.

9. Subscriptions to the General Provident Fund may be paid by remittance in cash to the Audit office which audited his pay in his last post in the case of a Government servant on leave who draws his leave-salary from a Colonial Treasury but when a subscriber draws his leave-salary from the Home treasury of the Government of India, his subscription may be paid by deduction from such salary.

A Government servant who draws his leave-salary from the Home treasury and who desires to subscribe during his leave or any part of it must notify his intention beforehand in order to allow of the deductions from his leave-salary being noted in his leave-salary certificate. Unless an extension of leave is granted, the option thus notified will be final.

10. Before departure on leave, a subscriber to the Indian Civil Service Provident Fund should intimate to the Account Officer of the province or department in which he is permanently employed the amount which he desires to contribute monthly during his leave. A subscriber to the Bengal and Madras Service Family Pension Fund should communicate with the Accountant-General, Central Revenues; and a subscriber to any other fund with the Secretary of the Fund concerned, informing him of the arrangement he proposes to make regarding the payment of his subscription during his absence.

11. Contributions due under the Indian Civil Service Family Pension Regulations must be paid in England in sterling. If a subscriber previous to quitting India has commenced the payment of any donation by instalments, he may either complete the payment of his donation in India before leaving or pay the remaining instalments in England at English rates. Subscribers to this fund will obtain from the Audit Officer who audits their pay in their last posts a certificate of the date up to which they have paid their subscriptions.

11-A. Subscriptions under the Superior Services (India) Family Pension Fund are payable during leave; but the Secretary of State in Council may at his discretion permit recovery of subscriptions due over a prolonged period of leave on medical certificate or of extraordinary leave without pay to be postponed until the expiration of such leave.

12. *Report of arrival in the United Kingdom.*—When a Government servant arrives in the United Kingdom he should at once report his arrival by letter to the High Commissioner for India at India House, Aldwych, London, W. C. 2, giving an address at which letters will find him, and he should forward his leave-salary certificate to the same authority on arrival, or as soon as he receives it from India.

12-A. *Military Officers in Civil employ visiting foreign countries.*—Military Officers in Civil employ are bound by the rules contained in paragraphs 883 and 884 of the Regulations for the Army in India, requiring that permission shall be obtained before visiting certain foreign countries named in those paragraphs and prescribing the procedure for obtaining such permission and the necessary passports.

13. *Payment at the Home Treasury.*—The leave-salary (including the sterling leave-salary of Government servants drawing their leave-salary in India or in a Dominion or Colony) of all Government servants is issued from the Home treasury monthly in arrear on the first day of each calendar month. It will be paid to the Government servant on his personal application, or to his banker or other agent, duly authorised under power-of-attorney, on

production of a life certificate filled up and executed in the manner directed thereon (except in cases where proof of existence is not required owing to the banker having been permitted to execute a Deed of Covenant and Indemnity guaranteeing the Secretary of State or the High Commissioner against loss consequent on his dispensing with the production of such proof), or on presentation of a payment form comprising a receipt and a life certificate both duly completed by the Government servant. A supply of life certificate forms may be obtained from the High Commissioner on the Government servant's written application.

NOTE 1.—If the leave-salary is drawn by a banker or agent who has executed a general bond of indemnity, a life certificate should be produced at least once a year.

NOTE 2.—If the Government servant intimates to the High Commissioner his election of this method he will be regularly supplied with the requisite payment form as the due date of issue approaches.

14. *Payment in a Colony.*—Payment of leave-salary will not be made by a Colonial authority unless the Government servant produces his copy of the warrant. Each payment made in the Colony will be endorsed upon the warrant.

When no space for the entry of endorsements of payment remains upon the back of a Colonial leave-salary warrant, or when a warrant is lost or destroyed, the Government servant concerned should make an application for a fresh warrant through the Colonial Disbursing Officer to the Audit Officer who issued the original warrant.

15. *Transfer of payment from one Colony to another.*—If the transfer from one Colony to another of payment of the leave-salary of a Government servant is sanctioned by the Colonial authorities, such transfer must be reported by the Government servant to the Governor General in Council and to the High Commissioner.

16. *Transfer of payment from the Home Treasury to a Colony and* vice versa.—If a Government servant drawing his leave-salary in a Colony desires to transfer payment to the Home treasury, he can do so on production of his warrant to the High Commissioner. If one drawing his leave-salary from the Home treasury desires to transfer payment to a Colony, he must obtain a warrant from the High Commissioner. A transfer of this kind must be reported by the Government servant to the Governor General in Council.

17. *Extension or commutation of leave.*—A Government servant absent on leave in Europe, North Africa, America or the West Indies, who wishes to have his leave extended or commuted, must apply to the High Commissioner for India about three months before the expiry of his leave, and, unless the extension is desired on medical grounds, or is for a period of not more than 14 days, he must produce with his application evidence that the Government on whose cadre he is borne has been referred to by him and has no objection to the extension or commutation desired. It is in exceptional cases only that the High Commissioner will grant an extension without the production of such evidence and then for such period only as may be necessary to obtain the orders of the Government concerned, which will be sought by telegraph at the applicant's expense.

18. If on medical grounds a Government servant on leave in any of the localities named in paragraph 17 desires an extension for more than 14 days he must satisfy the Medical Board at the India Office of the necessity for the extension. In order to do so, he must, as a general rule, appear at the India Office for examination by the Board, but in special cases, and, particularly, if he is residing at a distance of more than 60 miles from London, a certificate in a form to be obtained from the High Commissioner may be accepted if

signed by two medical practitioners. A certificate obtained outside the United Kingdom and signed by foreigners must be attested by consular or other authority as bearing the signature of qualified medical practitioners. If application for extension be delayed until the last two months of leave, advice of any extension granted for a period of more than seven days will be sent to India by telegraph and the cost of the telegram will ordinarily be charged to the Government servant.

19. If a Government servant on leave in any of the localities named in paragraph 17 has been granted leave on medical certificate and desires an extension on grounds other than medical he must satisfy the Medical Poard as prescribed in paragraph 18 above that he has recovered his health. Any such extension without medical certificate will only be admissible if the extension was due at the time the original leave was granted.

In the case of a commissioned Medical Officer the local Government will make a reference to the Director-General, Indian Medical Service, before granting the permission.

20. A Government servant on leave out of India elsewhere than in any of the localities named in paragraph 17 who wishes to have his leave extended or commuted must apply three months before the expiry of the leave to the authority in India which granted it.

21. If an application made under paragraph 20 above is for an extension of leave on medical certificate, it must be accompanied by a certificate from two medical practitioners in the following form :—

" We hereby certify that we have carefully examined C. D. of the who is suffering from and we declare upon our honour that, according to the best of our judgment and belief, he is at present unfit for duty in India, and that it is absolutely necessary for the recovery of his health that his present leave, which will expire in India on , shall be extended by $\frac{\text{months}}{\text{weeks}}$.

Date

Place

,,

The certificate must describe in full detail the nature of the disease and the present condition of the Government servant. If it be signed by foreigners, it must be attested by consular or other authority as bearing the signatures of qualified medical practitioners.

22. An extension of leave will not be granted by the High Commissioner to a Government servant to whom no leave-salary certificate or Colonial leave-salary warrant has been issued, unless he produces a certificate of leave (*vide* paragraph 7 *ante*).

23. Leave out of India on medical certificate may be commuted into leave without medical certificate if such leave was due at the time when the original leave was granted, and if the Government servant seeking commutation is certified, in the manner prescribed, to have recovered his health. When extension of the commuted leave is applied for, the application must be supported by evidence that the Government servant's local Government consents to the extension of his leave.

24. A Government servant who remains absent after the end of his leave is entitled to no leave-salary for the period of such absence unless his leave is extended by the local Government. Wilful absence from duty after the expiry of leave may be treated as misbehaviour for the purpose of Fundamental Rule 15, which runs as follows :—

> "A Government servant shall not, save in the case of inefficiency or misbehaviour, be transferred substantively to a post carrying less pay than his relative position in the cadre of the service to which he belongs would justify."

25. *Return from leave.*—A Government servant may not, without the permission of the authority which granted him leave, return to duty more than 14 days before the end of long leave. The rule applies to Military Officers subject to the Military Leave Rules. He must obtain permission to return to duty from the local Government.

26. A Government servant, who is required to produce a medical certificate of fitness before returning to duty, must obtain permission to return to duty before so returning.

27. If the Government servant desiring to return is on leave in any of the localities named in paragraph 17, his application must be made to the High Commissioner and he must satisfy the Medical Board at the India Office of his fitness to return at least two months before the expiry of his leave. In order to do so, he must follow the procedure prescribed in paragraph 18 above. When the Medical Board has been satisfied, the High Commissioner will grant permission to return.

28. If the Government servant desiring to return is on leave out of India elsewhere than in the localities named in paragraph 17, his application must be made to the authority which granted his leave and must be accompanied by a certificate of fitness in the prescribed form.

29. Permission to return will not be granted to a Government servant to whom no leave-salary certificate or Colonial leave-salary warrant has been issued, until he produces a certificate of leave.

30. *Last-pay certificate.*—Before returning to duty, a Government servant on leave in Europe must obtain a last-pay certificate from the High Commissioner and bring it with him to India and not leave it with his Home Agent, as it will be required for presentation to the Audit Officer, if it is desired to draw on arrival in India the advance which is permissible under paragraph 35. In such an event the English last-pay certificate should be with the Government servant, as it facilitates his identification at the Audit office and the advance has to be recorded on the certificate. A last-pay certificate will not be granted to a Government servant to whom no leave-salary certificate has been issued unless he produces a certificate of leave. A Government servant who has drawn his leave-salary on a warrant must, on return to India, deliver to the Audit Officer, by whom the pay of the post which he will join will be audited, his copy of the warrant which will serve as a last-pay certificate.

31. *Procedure on return to duty.*—A gazetted Government servant must report his return to duty to the Government under which he is serving. A Chaplain must report his return to the Bishop of his Diocese also.

32. A Government servant is not entitled on his return from leave to resume, as a matter of course, the particular post he vacated before his departure on leave, even though that post may be his substantive post; he must report his return to duty and await orders.

NOTE.—Members of the Engineer or Upper Subordinate Establishment of the Public Works Department should, on arrival at the port of debarkation, report themselves personally to the Secretary in the Public Works Department of Bengal, Madras, Bombay or Burma as the case may be, and ask for orders. If they return *via* Karachi, they should apply to the office of the Executive Engineer, Karachi Canals, for orders.

33. A Government servant may return to India by any port and his leave ends on the day preceding that on which the vessel arrives at the port where he last quits it. If, however, the leave from which he returns is of four months' duration or less, his leave ends on the day preceding that on which he takes charge of his duties, unless he takes charge in the afternoon, when the leave terminates on and includes that day.

34. On return to duty, the last-pay certificate obtained from the High Commissioner should be exchanged for a last-pay certificate which the Audit office of the province to which he has been posted will furnish address to the treasury or office at which, after his return, the Government servant intends to draw his pay and allowances.

35. *Advances.*—A Government servant returning from leave out of India may be granted an advance of his leave-salary for the unexpired portion of his leave subject to a maximum of 35 days from the date of embarkation for India. On arrival in India an advance may, if he desires it, be paid to a Government servant by or under the order of the Audit office of the province in which the advance is sought to be drawn under Article 159 (*b*) of the Civil Account Code, Volume I.

To a Chaplain appointed before the 7th June 1923, who is proceeding on leave to England, an advance of three months' leave-salary may be made, provided that no part of the leave is on average pay. Such an advance is not recoverable in the event of the Chaplain's death.

To a Military Officer subject to the Military Furlough Regulations of 1868 proceeding on furlough (not combined with privilege leave) to England an advance of furlough pay may, if he desires it, be made for three months from the date of embarkation. Payments in continuation will be made in England on the expiration of four months from that date.

36. *Acceptance of service during leave.*—A Government servant is not permitted to take any service or accept any employment without obtaining the previous sanction of—

(*a*) the Secretary of State, if the Government servant is residing in Europe, North Africa, America or the West Indies; or

(*b*) the Governor General in Council or the authority competent to appoint him, if he is residing elsewhere.

1. A Civilian Government servant on leave, who has received orders from the War Office or any other department of State in England to undertake any duty in the case of a national emergency, should obtain the permission of the Secretary of State before complying with such orders.

37. *Hospital for Tropical Diseases, Endsleigh Gardens.*—Government servants from India in the United Kingdom suffering from Tropical Diseases are not always aware that, whether they are actually on leave on medical certificate or not, it may be to their advantage to appear before the Medical Board in order that the Board may advise them as to the best steps to take regarding such diseases.

Arrangements have been made for the diagnosis and preliminary treatment of the diseases, and for the admission of officers, when necessary, as in-patients at the Hospital for Tropical Diseases, Endsleigh Gardens, N. W. 1. A report is furnished to officers by the Hospital, which they can take with them to their own Medical adviser to enable him to carry out the treatment suggested. The cost of the examination and preliminary treatment at the Hospital, and also that of the accommodation supplied to officers admitted as in-patients, is defrayed by the India Office. The Hospital is, however, permitted to charge a special extra fee to senior officers of the Civil Department who on admission as in-patients, are, at their own request given special accommodation. This extra fee is payable by the officer himself, the India Office paying that portion only of the total charge which represents the cost of ordinary, as distinct from special, accommodation.

To secure these advantages, however, a recommendation to the Hospital for Tropical Diseases by the Medical Board is necessary, and, therefore, Government servants who wish to avail themselves of this arrangement should apply to appear before the Medical Board of the India Office as soon as possible after arrival.

Stamps.

No. 1099 S. R.—7th September 1936.—The following abstract and statement of receipts and charges of the Stamp Department in Bengal for the year 1935-36 are published for general information:—

STATEMENT I—Abstract of receipts and charges for the year ending the 31st March 1936.

	Receipts.	Charges.						Net receipts.
		Discount and establishment for sale of stamps.	Refunds.	Cost of stamps supplied from Central Stamp Store.	Cost of general supervision.	Other charges.	Total.	
1	2	3	4	5	6	7	8	9
	Rs.	Rs.	Rs.	Rs.	Rs.	Rs.	Rs.	Rs.
Under the Court-fees Act ..	2,21,45,481	1,40,782	1,18,315	80,675	Nil	16,440	3,56,212	2,17,89,269
Under the Stamp Act ..	82,59.946	1,48,670	6,93,558	58,967	Nil	32,879	9,34,074	73,25,872
Total ..	(a) 3,04,05,427	2,89,452	8,11,873	1,39,642	Nil	49,319	12,90,286	2,91,15,141
Total for 1934-35 (Final) ..	(b) 2,94,02,746	2,75,805	7,99,753	1,60,260	Nil	52,130	12,87,948	2,81,14,798

(a) Includes Rs.5,52,887 paid to the Calcutta Improvement Trust on account of excess stamp duty realised from several districts and Rs. 45,000 paid to the Government of Assam as annual assignment on account of stamp duty paid in Bengal in respect of non-judicial stamps on documents relating to property or transactions in Assam.

(b) Includes Rs.5,63,159 paid to the Calcutta Improvement Trust on account of excess stamp duty realised from several districts and Rs. 45,000 paid to the Government of Assam as annual assignment on account of stamp duty paid in Bengal in respect of non-judicial stamps on documents relating to property or transactions in Assam.

Statement of receipts on account of duty on Probates, Letters of Administration, Certificates and Extended Certificates under Act XXVII of 1860 and Act VII of 1889 during the year ending the 31st March 1936.

	Rs.
Probates, etc., granted by the High Court	9,15,377
Probates, etc., granted by the subordinate Civil Courts	2,61,283
Total ..	(c) 11,76,660
Total for 1934-35	(c) 13,02,052

(c) The amounts are included in the receipts under the head "Court-fee stamps" in column 2 of the above abstract.

R. L. WALKER,
Secretary to the Government of Bengal (offg.).

COMMERCE DEPARTMENT.

NOTIFICATION.

No. 6600 Com.—3rd September 1936.—In exercise of the power conferred by rule 42 of the Civil Services (Classification, Control and Appeal) Rules, the Governor in Council is pleased to make the following rule to regulate the pay of the post of the Electrical Adviser and Chief Electric Inspector, Bengal, while held by Mr. S. W. Redclift. It shall be deemed to have come into force with effect from the 9th October 1935:—

Rule.

The pay of the said post, while held by Mr. S. W. Redclift, shall be Rs. 1,550—50—1,650 plus (overseas pay) £ 30.

R. L. WALKER,
Secy. to the Govt. of Bengal (offg.).

MARINE DEPARTMENT.

NOTIFICATION.

No. 27Mne.—3rd September 1936.—It is hereby notified under the provisions of section 6 (2) of the Calcutta Port Act, 1890, that Mr. A. L. Ojha of Messrs. Amritlal Ojha and Company, Limited, has been elected by the Indian Chamber of Commerce to be a Commissioner for the Port of Calcutta, with effect from the 6th September 1936.

R. L. WALKER,
Secy. to the Govt. of Bengal (offg.).

PUBLIC WORKS DEPARTMENT.

Establishment.

NOTIFICATION.

Minister-in-charge: The Hon'ble Nawab Sir Mohiuddin Faroqui, Kt., of Ratanpur.

No. 41.—1st September 1936.—Mr. Phanindra Chandra Roy, temporary Assistant Engineer, Chittagong Division, is allowed leave for fifteen days, with effect from the 2nd September 1936, viz., earned leave (on leave salary equal to pay) for two days, under rule 11 (*a*) of the Bengal Services (Revision of Leave) Rules, 1934, and extraordinary leave (without leave salary) for the remaining period, under rule 17 (2) of those Rules.

H. S. E. STEVENS,
Secy. to the Govt. of Bengal.

No. 42.—5th September 1936.—Babu Indu Bhusan Das Gupta, Assistant Engineer, Rajshahi Division, in the Northern Circle, is, under rule 81 (*b*) (*ii*) of the Fundamental Rules, allowed leave on average pay for one month and twenty-three days, with effect from the 31st October 1936.

C. P. M. HARRISON, *Chief Engineer.*

IRRIGATION DEPARTMENT.

Establishment.

NOTIFICATION.

No. 10.—2nd September 1936.—Mr. D. N. Sen Gupta, Executive Engineer, is granted leave on average pay for two months and twenty-three days, under rule 81 (*b*)(*i*) of the Fundamental Rules, with effect from the 1st October 1936 or any subsequent date from which he may avail himself of it.

H. S. E. STEVENS,
Secy. to the Govt. of Bengal.

DEPARTMENT OF AGRICULTURE AND INDUSTRIES.

Zoological Garden.

NOTIFICATIONS.

Minister-in-charge: The Hon'ble Nawab Sir Mohiuddin Faroqui, Kt., of Ratanpur.

Calcutta. — No. 5731Zoo. — 31st August 1936.—Mr. Sudhansu Kumar Mitter, a Councillor of the Corporation of Calcutta, is reappointed to be a member of the Honorary Committee of Management of the Zoological Garden, Calcutta, for the year 1936-37.

Calcutta. — No. 5732Zoo. — 31st August 1936.—Babu Phanindra Nath Brahma, a Councillor of the Corporation of Calcutta, is reappointed to be a member of the Honorary Committee of Management of the Zoological Garden, Calcutta, for the year 1936-37.

H. S. E. STEVENS,
Secy. to the Govt. of Bengal.

Orders by the Registrar of Co-operative Societies, Bengal.

No. 14613.—1st September 1936.—In modification of this office notifications as noted below, so far as these relate to the appointment of Babu Ramesh Chandra Som, Pleader, Chandpur, as liquidator of the societies, noted against each notification, in the district of Tippera, I hereby appoint the Departmental Officer-in-charge of Co-operative Societies, Chandpur Circle, as liquidator of the said societies:—

No. 22-L., dated the 14th August 1930—Paranpur Joutha Bank.

No. 82-L., dated the 18th November 1930—Dakshin Paranpur Joutha Bank.

No. 147-L., dated the 9th June 1930—Mollakandi Dakshinpara Joutha Bank.

A. M. ARSHAD ALI,
Regr. of Co-operative Societies, Bengal.

REVENUE DEPARTMENT.

Land Revenue.

NOTIFICATIONS.

Murshidabad.—No. 12746L.R.—2nd September 1936.—Under section 3 of the Bengal Survey Act, 1875 (Act V of 1875), the Governor in Council is pleased to order that a survey shall be made of all lands which are comprised in the revenue free estate noted below of the Murshidabad Collectorate and that the boundaries of the estates, tenures, mauzas and fields be demarcated on the lands so to be surveyed:—

Serial No.	Estate No.	Thana.
1	21 BII	Berhampur Town.

Murshidabad.—No. 12747L.R.—2nd September 1936.—In exercise of the powers conferred by section 101 (2) (b) of the Bengal Tenancy Act, 1885 (Act VIII of 1885), the Governor in Council is pleased to order that a survey shall be made and a record-of-rights prepared in respect of all lands which are comprised in the following revenue free estate of the Murshidabad Collectorate:—

Serial No.	No. of estate.	Thana
1	21 BII	Berhampur Town.

The particulars to be recorded in the record-of-rights shall be the following :—

(a) the name of each tenant or occupant;

(b) the class or classes to which each tenant belongs, that is to say, whether he is a tenure-holder, raiyat holding at fixed rate, settled raiyat, occupancy raiyat, non-occupancy raiyat, or under-raiyat, with or without a right of occupancy, and if he is a tenure-holder, whether he is a permanent tenure-holder or not, and whether his rent is liable to enhancement during the continuance of his tenure;

(c) the situation and quantity of the land held by each tenant or occupier;

(d) the name of each tenant's landlord;

(e) the name of each proprietor in the local area or estate with the character and extent of his interest and the situation and quantity of the lands, if any, which are his private lands as defined in Chapter XI of the Act;

(f) the rent and cess lawfully payable by each tenant at the time the record-of-rights is being prepared;

(g) the amount payable in respect of any rights of pasturage, forest rights, rights over fisheries, and the like at the time the record-of-rights is being prepared; the conditions and incidents appertaining to such rights, and if the amount is a gradually increasing amount, the time at which and the increments by which it increases;

(h) the mode in which that rent has been fixed, whether by contract, by order of a Court or otherwise;

(i) if the rent is a gradually increasing rent, the time at which and the steps by which it increases;

(j) the rights and oligations of each landlord and tenant in respect of—

(i) the use by tenants of water for agricultural purposes, whether obtained from a river, jhil, tank or well or any other source of supply, and

(ii) the repair and maintenance of appliances for securing a supply or water for the cultivation of the land held by each tenant, whether or not such appliances be situated within the boundaries of such land;

(k) the special conditions and incidents, if any, of the tenancy;

(l) any right of way or other easement attaching to the land for which a record-of-rights is being prepared;

(m) if the land is claimed to be held rent-free, whether or not rent is actually paid, and if not paid, whether or not the occupant is entitled to hold the land without payment of rent, and if so entitled under what authority:

Provided that if lands are not used for purposes connected with agriculture or horticulture, it shall be sufficient to record that fact together with the prescribed particulars relating to the occupant, the landlord and the tenancy.

Midnapore.—No. 12756L.R.—2nd September 1936.—Under the provision of section 35 of Regulation VII of 1822, the following officers are vested with the powers of a Collector under sections 19 and 24 of that regulation:—

(1) B. G. Rao, Esq., I.C.S., within the areas of Contai subdivision and Contai khas mahals.

(2) Babu Durga Pada Banerjee, Sub-Deputy Collector and Khas Mahal Manager, Contai, within the area of Contai khas mahals.

Burdwan-Hooghly.—No. 12891L.R.—5th September 1936.—In exercise of the powers conferred by section 115B of the Bengal Tenancy Act, 1885 (Act VIII of 1885), the Governor in Council is pleased to empower Babu Kunja Mohan De, Sub-Deputy Collector and Assistant Settlement Officer, Burdwan-Hooghly, to make corrections in the record-of-rights prepared in respect of the lands in the districts of Burdwan and Hooghly, in accordance with, and subject to, the provisions of the said section.

Pabna.—No. 12908L.R.—5th September 1936.—In exercise of the powers conferred by sub-section (3) of section 158A of the Bengal Tenancy Act, 1885 (VIII of 1885), the Governor in Council is pleased to appoint for the purpose of that section Maulvi Abdullah, Deputy Collector, Serajgunj, to perform the functions of a Certificate Officer under the Bengal Public Demands Recovery

Act, 1913 (Bengal Act III of 1913), for the recovery of arrears of rents (including cesses) due to the following estates, situated in the district of Pabna:—

(1) Estate of Babu Gagunendra Nath Tagore and others,

(2) Estate of Rai Sahib Upendra Lal Pakrashi and others,

(3) Estate of Babu Akhil Chandra Pakrashi, and

(4) Estate of Babu Suresh Chandra Pakrashi and others.

Midnapore.—No 12920L.R.—7th September 1936.—Under section 3 of the Bengal Survey Act (V of 1875), the Governor in Council is pleased to order that a survey shall be made of all lands which are comprised in the Government estate Mahar bearing tauzi No. 2246 of the Midnapore Collectorate and that the boundaries of the estate, tenures, mauzas and fields be demarcated in the lands so to be surveyed.

Midnapore.—No. 12921L.R.—7th September 1936.—In exercise of the powers conferred by section 101 (2)(*d*) of the Bengal Tenancy Act (Act VIII of 1885), the Governor in Council is pleased to order that a survey shall be made and a record-of-rights prepared in respect of all lands which are comprised in the Government estate Mahar bearing tauzi No. 2246 of the Midnapore Collectorate.

The particulars to be recorded in the record-of-rights shall be the following:—

(*a*) the name of each tenant or occupant;

(*b*) the class or classes to which each tenant belongs, that is to say, whether he is a tenure-holder, raiyat holding at fixed rates, settled raiyat, occupancy raiyat, non-occupancy raiyat or under-raiyat, with or without a right of occupancy, and if he is a tenure-holder, whether he is a permanent tenure-holder or not, and whether his rent is liable to enhancement during the continuance of his tenure;

(*c*) the situation and quantity of the land held by each tenant or occupier;

(*d*) the name of each tenant's landlord;

(*e*) the rent and cess lawfully payable by each tenant at the time the record-of-rights is being prepared;

(*f*) the amount payable in respect of any rights of pasturage, forest rights, rights over fisheries and the like at the time the record-of-rights is being prepared, the conditions and incidence appertaining to such rights, and if the amount is a gradually increasing amount, the time at which and increments by which it increases;

(*g*) the mode in which the rent has been fixed, whether by contract or by order of a court or otherwise;

(*h*) if the rent is a gradually increasing rent, the time at which and the steps by which it increases;

(*i*) the rights and obligations of each tenant and landlord in respect of—

(1) the use by tenants of water for agricultural purposes, whether obtained from a river, jhil, tank or well or any other source of supply and;

(2) the repair and maintenance of appliances for securing a supply of water for cultivation of the land held by each tenant, whether or not such appliances be situated within the boundaries of such land;

(*j*) the special conditions and incidence, if any, of the tenancy,

(*k*) any right of way or other easement attaching to the land for which a record-of-rights is being prepared;

(*l*) if the land is claimed to be held rent-free, whether or not rent is actually paid, and, if not paid, whether or not the occupant is entitled to hold the land without payment of rent and, if so entitled, under what authority;

(*m*) provided that if lands are not used for purposes connected with agriculture or horticulture, it shall be sufficient to record the fact together with the prescribed particulars relating to the occupant, the landlord and the tenancy.

Midnapore.—No. 12922L.R.—7th September 1936.—Under section 3 of the Bengal Survey Act (V of 1875), the Governor in Council is pleased to order that a survey shall be made of the lands comprised in the following permanently settled estates found ejmali with Government estate Mahar bearing tauzi No. 2246 of the Midnapore Collectorate and that the boundaries of the estates, tenures, mauzas and fields be demarcated on the lands so to be surveyed:—

Serial No.	Name of estate.	Touzi No.
1	Amda	... 2101
2	Bahabalpur	... 2105
3	Bansbani	... 2123
4	Ditto	... 2124
5	Gumai	... 2150
6	Bansbani *alias* Sabong	... 2121
7	Kerur	... 2206
8	Kerur	... 2207
9	Khorai	... 2209
10	Khelna Chhota	... 2213
11	Ditto	... 2214
12	Mirupur *alias* Kismat Sabong	... 2238
13	Mohar	... 2244
14	Mohar	... 2245
15	Mohar	... 2247
16	Mohar	... 2248
17	Mohar	... 2249
18	Mohar	... 2250
19	Mohar	... 2251
20	Naya	... 2253
21	Paschim Khiroi	... 2259
22	Perua	... 2275
23	Sabong *alias* Kismat Sabong	... 2324
24	Sabong	... 2326
25	Sabong *alias* Bar Khelna Kasba Balarampur.	... 2327
26	Sabong	... 2329

Midnapore.—No. 12923L.R.—7th September 1936.—In exercise of the powers conferred by section 101(*2*)(*b*) of the Bengal Tenancy Act (Act VIII of 1885), the Governor in Council is pleased to order that a survey shall be made and a record-of-rights prepared in respect of the lands comprised in the following permanently settled estates found ejmali with Government estate Mahar bearing tauzi No. 2246 of the Midnapore Collectorate:—

Serial No.	Name of estate.	Touzi No.
1	Amda	... 2101
2	Bahabalpur	... 2105
3	Bansbani	... 2123
4	Ditto	... 2124
5	Gumai	... 2150
6	Bansbani *alias* Sabong	... 2121
7	Kerur	... 2206
8	Kerur	... 2207
9	Khorai	... 2209
10	Khelna Chhota	... 2213
11	Ditto	... 2214
12	Mirupur *alias* Kismat Sabong	... 2238
13	Mohar	... 2244
14	Mohar	... 2245
15	Mohar	... 2247
16	Mahar	... 2248
17	Mohar	... 2249
18	Mohar	... 2250
19	Mohar	... 2251
20	Naya	... 2253
21	Paschim Khiroi	... 2259
22	Perua	... 2275
23	Sabong *alias* Kismat Sabong	... 2324
24	Sabong	... 2326
25	Sabong *alias* Bar Khelna Kasba Balarampur	... 2327
26	Sabong	... 2329

The particulars to be recorded in the record-of-rights shall be the following:—

(*a*) the name of each tenant or occupant;

(*b*) the class or classes to which each tenant belongs, that is to say, whether he is tenure-holder, raiyat holding at fixed rate, settled raiyat, occupancy raiyat, non-occupancy raiyat or under-raiyat, with or without a right of occupancy, and if he is a tenure-holder, whether he is permanent tenure-holder or not, and whether his rent is liable to enhancement during the continuance of his tenure;

(*c*) the situation and quantity of the land held by each tenant or occupier;

(*d*) the name of each tenant's landlord;

(*e*) the name of each proprietor in the local area or estate with the character and extent of his interest and the situation and quantity of lands, if any, which are his private lands, as defined in Chapter XI of the Act;

(*f*) the rent and cess lawfully payable by each tenant at the time the record-of-rights is being prepared;

(*g*) the amount payable in respect of any rights of pasturage, forest rights, rights over fisheries, and the like at the time the record-of-rights is being prepared, the conditions and incidence appertaining to such rights, and if the amount is a gradually increasing amount, the time at which and increments by which it increases;

(*h*) the mode in which the rent has been fixed, whether by contract, by order of a court or otherwise;

(*i*) if the rent is a gradually increasing rent, the time at which and the steps by which it increases;

(*j*) the rights and obligations of each tenant and landlord in respect of—

(1) the use by tenants of water for agricultural purposes, whether obtained from a river, jhil, tank or well or any other source of supply, and

(2) the repair or maintenance of appliances for securing a supply of water for the cultivation of the land held by each tenant, whether or not such appliances be situated within the boundaries of such land;

(*k*) the special conditions and incidence if any, of the tenancy;

(*l*) any right of way or other easement attaching to the land for which a record-of-rights is being prepared;

(*m*) if the land is claimed to be held rent free, whether or not rent is actually paid and, if not paid, whether or not the occupant is entitled to hold the land without payment of rent and if so entitled, under what authority;

(*n*) provided that if lands are not used for purposes connected with agriculture or horticulture, it shall be sufficient to record that fact together with the prescribed particulars relating to the occupant, the landlord and the tenancy.

ERRATUM.

No. 12957L.R.—7th September 1936.—In notification No. 10101L.R., dated the 14th July 1936, published at pages 1828-30 of Part I of *Calcutta Gazette* of the 30th idem, under Pukhuria Debt Settlement Board, *read* "1. Munshi Nasarat Biswas, member and Chairman" *for* "1. Munshi Basarat Biswas, member and Chairman."

Land Acquisition.

NOTIFICATIONS.

24-Parganas. — No. 12478L.A. — 28th August 1936.—The following agreement is published under section 42 of the Land Acquisition Act, 1 of 1894, for general information.

J. B. KINDERSLEY,
Secy. to the Govt. of Bengal (offg.).

Agreement.

MEMORANDUM OF AGREEMENT made this twenty-seventh day of August One thousand nine hundred and thirty-six BETWEEN THE CALCUTTA ELECTRIC SUPPLY CORPORATION LIMITED, a Company registered under the English Companies Acts and having its registered office at Victoria House, Vernon Place, Bloomsbury Square, London, and having a Branch Office at Victoria House, Chowringhee, Calcutta (hereinafter called "the Company") of the one part and THE SECRETARY OF STATE FOR INDIA IN COUNCIL (hereinafter called "the Secretary of State") of the other part.

WHEREAS for the purpose of the construction of a Switch House for the supply of electrical energy at Parbangala within thana Budge Budge, sub-registry Budge Budge, in the district of 24-Parganas in Bengal and its neighbourhood, the Company has applied to the Government of Bengal for the acquisition under the provisions of the Land Acquisition Act, 1894, of a piece or parcel of land containing an area of 1 cottah 14 chittacks or thereabouts equivalent to more or less 0·031 of an acre being a portion of the cadastral survey dag or plot No. 227 under khatian No. 231 at the said mauza Parbangala and more particularly described in the Schedule hereto and delineated in the plan* hereto annexed.

AND WHEREAS the said Government of Bengal being satisfied by an enquiry held under section 40 of the said Act that the proposed acquisition is needed for the aforesaid purpose and that the said work is likely to prove useful to the public has consented to acquire on behalf of the Company the piece or parcel of land hereinbefore described.

AND WHEREAS the said Government of Bengal has required the Company under the provisions of section 41 of the abovementioned Act to enter into the Agreement with the Secretary of State hereinafter contained.

NOW THIS INDENTURE WITNESSETH that it is hereby agreed and declared as follows:—

1. On demand the Company shall and will pay to the said Government of Bengal all and every compensation in respect of the said land tendered, paid or awarded or to be tendered, paid or awarded by the Collector under the Land Acquisition Act, 1894, or by the Court to which a reference under Part III of the said Act may be made or by the Court or Courts to which an appeal from the award of the said Court may be preferred and all costs, charges and expenses of the proceedings in the aforesaid Courts or otherwise incidental to the proposed acquisition or payable in respect thereof under the provisions of the said Act.

2. On demand made by the said Collector, the obligations of the Company under the last preceding clause not being thereby limited, the Company shall and will deposit with the said Collector such sum or sums of money as in his discretion the said Collector may in anticipation estimate to be necessary for the purposes mentioned in the last preceding clause.

3. On payment by the Company of all demands under the foregoing first clause or, in the discretion of the said Government of Bengal (on deposit by the Company of all estimated amounts as provided in the second clause), but not before possession shall have been taken under the provisions of the abovementioned Act, the Secretary of State shall make over possession of the said land to the Company and shall execute and do all such acts and deeds as may be necessary and proper for effectually vesting the same in the Company.

4. The said land shall be held by the Company for the purpose of such supply of electrical energy as is hereinbefore mentioned and purposes incidental thereto and without the sanction in writing of the said Government of Bengal first had and obtained for no other purpose whatsoever.

5. The said Switch House shall be completed and fully equipped in all respects ready for use within one year from the date on which possession of the said land shall have been given to the Company.

6. Should the said Switch House not be completed and fully equipped in all respects ready for use within the period stated in the last preceding clause or within such further period as in its discretion may be prescribed or allowed by the said Government of Bengal or should the said land at any time thereafter cease for a period of six consecutive months to be held and used or cease to be required for the purpose or purposes provided for in the foregoing fourth clause then and in any such case the said Government may summarily re-enter upon and take possession of the said land together with all buildings thereon whether such buildings were erected before or after transfer of the land to the Company and thereupon the interest of the Company in the said land and buildings shall absolutely cease and determine.

7. On taking such possession the said Government may sell or otherwise deal with the said land and buildings as it may think proper.

(*i*) Should the said Government sell the land with the buildings the said Government after deducting the expenses incurred in connection with the said taking of possession and with such sale shall pay the proceeds to the Company.

*Not printed herewith, but may be inspected in the office of the Land Acquisition Deputy Collector, at Alipore, 24-Parganas.

(*ii*) Should the said Government decide not to sell the land and buildings the said Government shall retain the said land and buildings thereon in which case the Secretary of State shall repay to the Company the market value as on the day of re-entry of all the buildings erected by the Company and all sums received from the Company in respect of all and every compensation as provided in the foregoing first clause (less the statutory allowance of 15 per cent. and less any amount received on account of trees and buildings which are not in existence at the time of resumption), but will not repay any sums paid and received on account of costs, charges and expenses.

(*iii*) Should the said Government decide to sell the buildings only, upon such sale the Secretary of State shall, after deducting the expenses of taking possession and selling, pay the balance of the proceeds of sale to the Company, together with the sum received from the Company in respect of the compensation for the land (less the statutory allowance of 15 per cent. and less any amount received from the Company on account of trees and buildings which are not in existence at the time of resumption), but will not repay any sum paid and received on account of costs, charges and expenses.

8. The public shall be entitled to the use of the said land on the following terms, that is to say, subject to the provisions of the Indian Electricity Act, 1910, and Rules made thereunder, or to the provisions of any other legislative enactment or rules in that behalf for the time being in force, the public in the vicinity of the said Switch House (when completed) shall be entitled to be supplied with electrical energy from such Switch House within the limits of the power available at such House and in pursuance of the terms of the electrical license granted to the Company.

9. Should any dispute or difference arise touching or concerning the subject matter of this Agreement or any covenant, clause or thing herein contained the same, shall be referred to the said Government of Bengal and the opinion and decision of the said Government upon such dispute or difference shall be final and conclusive and binding on the parties hereto.

The Schedule above referred to.

ALL THAT piece or parcel of land containing an area of 1 cottah 14 chittacks or thereabouts equivalent to more or less 0·031 of an acre being a portion of the cadastral survey dag or plot No. 227 under khatian No. 231 at mauza Parbangala, thana Budge Budge, subregistry Budge Budge, in the district of 24-Parganas and appertaining to tauzi No. 343 of the 24-Parganas Collectorate and butted and bounded on the North, West and East by the remaining portion of the said cadastral survey dag No. 227 in the possession of Srimutti Basanta Mayee Dassee, on the South by Nangi Bazar Road, and delineated in the map or plan hereto annexed.

IN WITNESS whereof the duly constituted attorneys of the Company and the Secretary of State for India in Council acting through the Government of Bengal have hereunto set their respective hands and seals the day and year first above written.

Signed, sealed and delivered by Franklin Thomas Homan and Walter Longsdon Price, the duly constituted joint attorneys of the Calcutta Electric Supply Corporation, Limited, for and on behalf of the Company in the presence of—

A. R. Colley, Assistant Commercial Manager, Victoria House, Calcutta.

For the Calcutta Electric Supply Corporation, Limited, by its duly constituted joint attorneys—

F. T. Homan.

W. L. Price.

Signed, sealed and delivered by Secretary to the Government of Bengal in the Revenue Department for and on behalf of the Secretary of State for India in Council in the presence of—

N. C. Sen, Assistant Secretary to the Government of Bengal, Revenue Department.

J. B. Kindersley, Secretary to the Government of Bengal, Revenue Department.

Bankura.—No. 12495 L.A.—29th August 1936.—The following agreement is published, under section 42 of the Land Acquisition Act, I of 1934, for general information.

J. B. KINDERSLEY,

Secy. to the Govt. of Bengal (offg.).

Agreement.

MEMORANDUM OF AGREEMENT made this 17th day of August 1936 between *Messrs. B. N. Elias & Company, Limited*, a Company (registered under the Indian Companies Act, 1913) and having its registered office at *1 and 2, Old Court House Corner in Calcutta* (hereinafter called the Company) of the one part and the Secretary of State for India in Council (hereinafter called the Secretary of State) of the other part.

WHEREAS for the purpose of the construction of *Electric Supply Power House* the Company has applied to the Government of Bengal for the acquisition under the provisions of the Land Acquisition Act, 1894, of the piece or parcel of land containing 4·50 acres or thereabout situate in the villages of *Patpur and Bankura* in the district of *Bankura* and more particularly described in the Schedule hereto and delineated in the plan* hereunto annexed.

AND WHEREAS the said Government of Bengal, being satisfied by an enquiry held under section 40 of the said Act that the proposed acquisition is needed for the aforesaid purpose and that the said work is likely to prove

*Not printed but may be inspected in the office of the Collector of Bankura.

useful to the public, has consented to acquire on behalf of the Company the piece or parcel of land hereinbefore described.

AND WHEREAS the said Government of Bengal has required the Company under the provision of section 41 of the abovementioned Act to enter into the Agreement with the Secretary of State hereinafter contained.

NOW THIS INDENTURE WITNESSETH that it is hereby agreed and declared as follows:—

1. On demand the Company shall and will pay to the said Government of Bengal all and every compensation in respect of the said land tendered, paid or awarded or to be tendered, paid or awarded by the Collector under the Land Acquisition Act, 1894, or by the Court to which a reference under Part III of the said Act may be made or by the Court or Courts to which an appeal from the award of the said Court may be preferred and all costs, charges and expenses of the proceedings in the aforesaid Courts, or otherwise incidental to the proposed acquisition or payable in respect thereof under the provisions of the said Act.

2. On demand made by the said Collector the obligations of the Company under the last preceding clause not being thereby limited, the Company shall and will deposit with the said Collector such sum or sums of money as in his discretion the said Collector may in anticipation estimate to be necessary for the purposes mentioned in the last preceding clause.

3. On payment by the Company of all demands under the foregoing first clause, or in the discretion of the said Government of Bengal (on deposit by the Company of all estimated amounts as provided in the second clause) but not before possession shall have been taken under the provisions of the abovementioned Act, the Secretary of State shall make over possession of the said land to the Company and shall execute and do all such acts and deeds as may be necessary and proper for effectually vesting the same in the Company.

4. The said land shall be held by the Company for the purposes of *supplying electrical energy* as is hereinbefore mentioned and without the sanction in writing of the said Government of Bengal first had and obtained for no other purpose whatsoever.

5. The said Power House shall be completed (and fully equipped in all respects and ready for use) within six months from the date on which possession of the said land is given to the Company.

6. Should the said *construction works* not be completed (and fully equipped in all respects ready for use) within the period stated in the last preceding clause or within such further period as in its discretion may be prescribed or allowed by the said Government of Bengal or should the said land at any time thereafter cease for a period of twelve consecutive months to be held and used or cease to be required for the purpose or purposes provided for in the foregoing fourth clause then and in any such case, the said Government may summarily re-enter upon and take possession of the said land together with all buildings thereon, whether such buildings were erected before or after transfer of the land to the Company, and thereupon the interest of the Company in the said land and buildings shall absolutely cease and determine.

7. On taking such possession the said Government may sell or otherwise deal with the said land and buildings as it may think proper.

(*i*) Should the said Government sell the land with the buildings the said Government after deducting the expenses incurred in connection with the said taking of possession and with such sale shall pay the proceeds to the Company.

(*ii*) Should the said Government decide not to sell the land and buildings, the said Government shall retain the said land and buildings thereon in which case the Secretary of State shall repay to the Company the market value as on the day of re-entry of all the buildings erected by the Company and all sums received from the Company in respect of all and every compensation as provided in the foregoing first clause (less the statutory allowance of 15 per cent. and less any amount received on account of trees and buildings which are not in existence at the time of resumption) but will not repay any sums paid and received on account of costs, charges and expenses.

(*iii*) Should the said Government decide to sell the buildings only, upon such sale the Secretary of State after deducting the expenses of taking possession and selling, pay the balance of the proceeds of sale to the Company, together with the sum received from the Company in respect of the compensation for the land (less the statutory allowance of 15 per cent. and less any amount received from the Company on account of trees and buildings which are not in existence at the time of resumption), but will not repay any sum paid and received on account of costs, charges and expenses.

8. The public in the vicinity of the said Power House shall be entitled to use the supply of electric energy from the said Power House on the terms of the Bankura Electric License, 1932, which has been granted to the Company, and subject to the provisions of the Indian Electricity Act, 1910, and rules made thereunder or to the provisions of any other legislative enactments or rules in that behalf for the time being in force.

9. Should any dispute or difference arise touching or concerning the subject matter of this Agreement or any covenant, clause or thing herein contained, the same shall be referred to the said Government of Bengal and the opinion and decision of the said Government upon such dispute or difference shall be final and conclusive and binding on the parties hereto.

The Schedule above referred to.

All that piece or parcel of land containing by estimation more or less 4·50 acres and comprising cadastral survey plots Nos. 978, 979, 981 and part of cadastral survey plots Nos. 977, 980, 982, 983, 985 and 986 in the village of Bankura, jurisdiction list No 211 and cadastral survey plots Nos. 927, 981 and 982 in the village of Patpur, jurisdiction list No. 212, thana Bankura, pargana Chhatna, district Bankura.

In witness whereof (the *said* Company has caused its common seal to be affixed and the Secretary of State for India in Council hath hereunto set his hand and seal) the day and year first above written.

The common seal of the abovenamed Messrs. B. N. Elias and Co., Ltd., was hereto affixed in the presence of J. B. Elias and N. B. Elias, two of the Directors of Messrs. B. N. Elias & Co. Ltd., in the presence of—

J. B. Elias, Director.

N. B. Elias, Director.

Witness—

D. I. Sassoon, Norton Buildings, Calcutta.

Signed, sealed and delivered by Secretary to the Government of Bengal in the Revenue Department on behalf of the Secretary of State for India in Council in the presence of—

J. B. Kindersley, Secretary to the Government of Bengal, Revenue Department.

Witness—

N. C. Sen, Assistant Secretary to the Government of Bengal, Revenue Department.

Nadia.—No. 12750L.A.—2nd September 1936.—Whereas it appears to the Governor in Council that land is likely to be required to be taken by Government at the public expense for a public purpose, viz., for constructing staff quarters of the Eastern Bengal Railway in the event of Hardinge Bridge failure in the villages of Golapnagar, jurisdiction list No. 15, and Char Golapnagar, jurisdiction list No. 5, thana Bheramara, pargana Lashkarpur, district Nadia, it is hereby notified that for the above purpose a piece of land comprising parts of cadastral plots Nos. 5978, 5979, 5980, 5984, 5985, 5986, 5987 and 5988 of village Golapnagar, jurisdiction list No. 15, and parts of cadastral plots Nos. 134, 135, 136, 137 and 138 of village Char Golapnagar, jurisdiction list No. 5, and measuring, more or less, 4·78 acres, is likely to be required within the aforesaid villages of Golapnagar and Char Golapnagar.

This notification is made, under the provisions of section 4 of Act I of 1894, to all whom it may concern.

A plan of the land may be inspected in the office of the Subdivisional Officer, Kushtia.

In exercise of the powers conferred by the aforesaid section, the Governor in Council is pleased to authorise the officers for the time being engaged in the undertaking, with their servants and workmen, to enter upon and survey the land and do all other acts required or permitted by that section.

Any person interested in the above land, who has any objection to the acquisition thereof, may, within thirty days after the date on which public notice of the substance of this notification is given in the locality, file an objection in writing before the Collector of Nadia.

Jessore.—No. 12753L.A.—2nd September 1936.—Whereas it appears to the Governor in Council that land is likely to be required to be taken by Government at the public expense for a public purpose, viz., for loco water supply from the river Ichhamutty, in the village of Bangaon, jurisdiction list No. 224, thana Bangaon, pargana Khoshdaha, district Jessore, it is hereby notified that for the above purpose a piece of land comprising parts of cadastral plot Nos. 1116, 1163 and 3433, and measuring, more or less, 0·1735 of an acre, is likely to be required within the aforesaid village of Bangaon.

This notification is made, under the provisions of section 4 of Act I of 1894, to all whom it may concern.

A plan of the land may be inspected in the office of the Collector of Jessore.

In exercise of the powers conferred by the aforesaid section, the Governor in Council is pleased to authorise the officers for the time being engaged in the undertaking, with their servants and workmen, to enter upon and survey the land and do all other acts required or permitted by that section.

Any person interested in the above land, who has any objection to the acquisition thereof, may, within thirty days after the date on which public notice of the substance of this notification is given in the locality, file an objection in writing before the Collector of Jessore.

Burdwan.—No. 12869L.A.—5th September 1936.—Whereas it appears to the Governor in Council that land is likely to be required to be taken by Government at the public expense for a public purpose, viz., for the safety of crops at mile 11 between chainage 45·60 and 49·30, main canal, Damodar Canal Project, in the village of Nala, jurisdiction list No. 20, in thana Burdwan, pargana Burdwan, district Burdwan, it is hereby notified that for the above purpose a piece of land comprising parts of cadastral survey plot No. 811, and measuring, more or less, 0·02 of an acre, is likely to be required within the aforesaid village of Nala.

This notification is made, under the provisions of section 4 of Act I of 1894, to all whom it may concern.

A plan of the land may be inspected in the office of the Special Land Acquisition Officer, Burdwan, as well as in that of the Executive Engineer, Damodar Canal Division, Burdwan.

In exercise of the powers conferred by the aforesaid section, the Governor in Council is pleased to authorise the officers for the time being engaged in the undertaking, with their servants and workmen, to enter upon and survey the land and do all other acts required or permitted by that section.

In exercise of the powers conferred by section 17 (*4*) of the Land Acquisition Act, I of 1894, as amended by Act XXXVIII of 1923, the Governor in Council is pleased to direct that the provisions of section 5 of the Act shall not apply in this area.

Chittagong.—No. 12882 L.A.—5th September 1936.—Whereas it appears to the Governor in Council that land is likely to be required to be taken by Government at the public expense for a public purpose, viz., for shifting the Dhroong Toll station office in the village of Uttar Kanchannagar, police-station Fatikcheri, zilla Chittagong, it is hereby notified that for the above purpose a piece of land comprising part of revisional survey plot No. 3609, and measuring, more or less, 1·12 acres, is likely to be required within the aforesaid village of Uttar Kanchannagar.

This notification is made, under the provisions of section 4 of Act I of 1894, to all whom it may concern.

A plan of the land may be inspected in the office of the Collector of Chittagong.

In exercise of the powers conferred by the aforesaid section, the Governor in Council is pleased to authorise the officers for the time being engaged in the undertaking, with their servants and workmen, to enter upon and survey the land and do all other acts required or permitted by that section.

Any person interested in the above land, who has any objection to the acquisition thereof, may, within thirty days after the date on which public notice of the substance of this notification is given in the locality file an objection in writing before the Collector of Chittagong.

Dacca.—No. 12888 L.A.—5th September 1936.—Whereas it appears to the Governor in Council that land is likely to be required to be taken by Government at the expense of the Bandar union board for a public purpose, viz., for the improvement and maintenance of the Kushiara road in the village of Kushiara, jurisdiction list No. 227, thana Narainganj, pargana Mahajampur, district Dacca, it is hereby notified that for the above purpose a piece of land comprising parts of cadastral survey plot Nos. 107, 106, 163, 161, 171, 172, 173, 837, 836, 835, 834, 831, 830, 828, 903, 905, 907, 913, 912, 810, 809, 914, 915, 916, 820 and 819, and measuring, more or less, 1·15 acres, is likely to be required within the aforesaid village of Kushiara.

This notification is made, under the provisions of section 4 of Act I of 1894, to all whom it may concern.

A plan of the land may be inspected in the office of the Subdivisional Officer, Narainganj.

In exercise of the powers conferred by the aforesaid section, the Governor in Council is pleased to authorise the officers for the time being engaged in the undertaking, with their servants and workmen, to enter upon and survey the land and do all other acts required or permitted by that section.

Any person interested in the above land, who has any objection to the acquisition thereof, may, within thirty days after the date on which public notice of the substance of this notification is given in the locality, file an objection in writing before the Collector of Dacca.

Calcutta. No. 12894L.A.—5th September 1936.—Whereas it appears to the the Governor in Council that land is likely to be required to be taken by Government at the expense of the Corporation of Calcutta for a public purpose, viz., for a storm water pumping station near the Palmer Bazar Pumping Station in ward No. 19 of the Calcutta Municipality in the city of Calcutta, it is hereby notified that for the above purpose a piece of land comprising premises Nos. 1 and 2, Canal South Road, and measuring, more or less, 0;5872 of an acre, bounded on the—

North—By Canal South Road,

West—By Palmer Bazar Road,

South and East—By land belonging to the Corporation of Calcutta,

is likely to be required within the aforesaid ward No. 19 of the Calcutta Municipality in the City of Calcutta.

This notification is made, under the provisions of section 4 of Act I of 1894, to all whom it may concern.

A plan of the land may be inspected in the office of the Second Land Acquisition Collector at No. 5, Bankshall Street, Calcutta.

In exercise of the powers conferred by the aforesaid section, the Governor in Council is pleased to authorise the officers for the time being engaged in the undertaking, with their servants and workmen, to enter upon and survey the land and do all other acts required or permitted by that section.

Any person interested in the above land, who has any objection to the acquisition thereof, may, within thirty days after the date on which public notice of the substance of this notification is given in the locality, file an objection in writing before the Second Land Acquisition Collector at No. 5 Bankshall Street, Calcutta.

Midnapore.—No. 12906L.A.—5th September 1936.—Mr. N. Roy Choudhury, I.C.S., Subdivisional Officer, Jhargram, district Midnapore, is vested with the powers of a Collector under the Land Acquisition Act, I of 1894, in that subdivision.

24-Parganas.—No. 12911L.A.—5th September 1936.—Whereas it appears to the Governor in Council that land is likely to be required to be taken by Government at the public expense for a public purpose, viz., for Ghugudanga police out-post, in the village of Kalidaha, jurisdiction list No. 23, thana Dum Dum, pargana Panchannagram, district 24-Parganas, it is hereby notified that for the above purpose a piece of land comprising cadastral plot No. 143 and measuring, more or less, 0·1015 of an acre, is likely to be required within the aforesaid village of Kalidaha.

This notification is made, under the provisions of section 4 of Act I of 1894, to all whom it may concern.

A plan of the land may be inspected in the office of the Land Acquisition Deputy Collector, 24-Parganas.

In exercise of the powers conferred by the aforesaid section, the Governor in Council is pleased to authorise the officers for the time being engaged in the undertaking, with their servants and workmen, to enter upon and survey the land and do all other acts required or permitted by that section.

Any person interested in the above land, who has any objection to the acquisition thereof, may, within thirty days after the date on which public notice of the substance of this notification is given in the locality, file an objection in writing before the Collector of 24-Parganas.

Howrah.—No. 12914L.A.—5th September 1936.—Whereas it appears to the Governor in Council that land is likely to be required to be taken by Government at the expense of the Howrah Municipality for a public purpose, viz., for opening out a 16 feet road between Ananta Dev Mukherji Lane and Hari Nath Nayaratna Lane, in the village of Sibpur, jurisdiction list No. 14, thana Sibpur, pargana Paikan, district Howrah, it is hereby notified that for the above purpose a piece of land measuring, more or less, 0·0876 of an acre, bounded on the—

North—By land and tank of Giribala Dasi, Jotindra Nath Mukherjee and others and land of Pulin Behari De.

South—By Pandit Harinath Nayaratna Lane and land of Jotindranath Mukherjee, Giribala Dasi and Nirod Chandra Mukherjee and others,

East—By land of Abdul Halim and Fuzlar Rahim and land of Giribala Dasi and Jotindra Nath Mukherjee and others,

West—By Pandit Harinath Nayaratna Lane and land and tank of Giribala Dasi, Jotindranath Mukherjee and others,

is likely to be required within the aforesaid village of Sibpur.

This notification is made, under the provisions of section 4 of Act I of 1894, to all whom it may concern.

A plan of the land may be inspected in the office of the Collector of Howrah.

In exercise of the powers conferred by the aforesaid section, the Governor in Council is pleased to authorise the officers for the time being engaged in the undertaking, with their servants and workmen, to enter upon and survey the land do all other acts required or permitted by that section.

Any person interested in the above land, who has any objection to the acquisition thereof, may, within thirty days after the date on which public notice of the substance of this notification is given in the locality, file an objection in writing before the Collector of Howrah.

Burdwan.—No. 12926L.A.—7th September 1936.—Whereas it appears to the Governor in Council that land is likely to be required to be taken by Government at the public expense for a public purpose, viz., for pitching and outfall channel of outlet at mile 2, chainage 40 and 65 feet of distributary No. 11, branch canal, Damodar Canal Project, in the village of Chandipur, jurisdiction list No. 41 in thana Bhatar, pargana Mazafarsahi, district Burdwan, it is hereby notified that for the above purpose a piece of land comprising part of cadastral survey plot No. 2010, and measuring, more or less, 0·017 of an acre, is likely to be required within the aforesaid village of Chandipur.

This notification is made, under the provisions of section 4 of Act I of 1894, to all whom it may concern.

A plan of the land may be inspected in the office of the Special Land Acquisition Officer, Burdwan, as well as in that of the Executive Engineer, Damodar Canal Division, Burdwan.

In exercise of the powers conferred by the aforesaid section, the Governor in Council is pleased to authorise the officers for the time being engaged in the undertaking, with their servants and workmen, to enter upon and survey the land and do all other acts required or permitted by that section.

In exercise of the powers conferred by section 17 (*4*) of the Land Acquisition Act I of 1894, as amended by Act XXXVIII of 1923, the Governor in Council is pleased to direct that the provisions of section 5A of the Act shall not apply in this case.

Nadia.—No. 12929L.A.—7th September 1936.—Whereas it appears to the Governor in Council that land is likely to be required to be taken by Government at the expense of the Santipur Municipality for a public purpose, viz., for a burial ground at mauza Sutragarh, pargana Ukhra, zilla Nadia, it is hereby notified that for the above purpose two pieces of land comprising cadastral plots Nos. 2183 and 2188 and altogether measuring, more or less, 5·90 acres, are likely to be required within the aforesaid village of Sutragarh.

This notification is made, under the provisions of section 4 of Act I of 1894, to all whom it may concern.

A plan of the land may be inspected in the office of the Subdivisional Officer, Ranaghat.

In exercise of the power conferred by the aforesaid section, the Governor in Council is pleased to authorise the officers for the time being engaged in the undertaking with their servants and workmen, to enter upon and survey the land and do all other acts required or permitted by that section.

Any person interested in the above land, who has any objection to the acquisition thereof, may, within thirty days after the date on which public notice of the substance of this notification is given in the locality, file an objection in writing before the Land Acquisition Deputy Collector of Ranaghat.

Tippera.—No. 12932L.A.—7th September 1936.—Whereas it appears to the Governor in Council that land is likely to be required to be taken by Government at the expense of the Chandpur Municipality for a public purpose, viz., for the extension of the trenching ground and the construction of an approach road to the existing trenching ground in the south section of the Chandpur Municipality, in the village of Chandpur Municipality, jurisdiction list No. 91, thana Chandpur, pargana Purchandi, district Tippera, it is hereby notified that for the above purpose a piece of land comprising part of cadastral survey plot No. 1427, and measuring, more or less, 1·075 acres, is likely to be required within the aforesaid village of Chandpur Municipality.

This notification is made, under the provisions of section 4 of Act I of 1894, to all whom it may concern.

A plan of the land may be inspected in the office of the Subdivisional Officer, Chandpur.

In exercise of the powers conferred by the aforesaid section, the Governor in Council is pleased to authorise the officers for the time being engaged in the undertaking, with their servants and workmen, to enter upon and survey the land and do all other acts required or permitted by that section.

Any person interested in the above land, who has any objection to the acquisition thereof, may, within thirty days after the date on which public notice of the substance of this notification is given in the locality, file an objection in writing before the Subdivisional Officer, Chandpur.

24-Parganas. — No. 12935L.A. — 7th September 1936.—The Governor in Council is pleased to cancel the notification No. 16861-L.A., dated the 30th October 1935, published under section 4 of the Land Acquisition Act, I of 1894, at pages 1990-91, Part I of the *Calcutta Gazette* of the 7th November 1935, in respect of the proposed acquisition of 0·0352 of an acre of land comprising cadastral plot No. 6145 and portion of plot Nos. 6444 and 6446 required by the Baranagore Municipality for widening a portion of the Joynarayan Banerjee Lane and for the municipal tube-well and pump house in the village of Barahanagor, jurisdiction list No. 5, thana Baranagore, pargana Calcutta, district 24-Parganas.

Tippera.—No. 12941L.A.—7th September 1936.—The Governor in Council is pleased to cancel notification No. 5208L.A., dated 26th April 1934, under section 4 of the Land Acquisition Act, I of 1894, published at page 639, Part I of the *Calcutta Gazette* of 3rd May 1934, in respect of the proposed acquisition of 0·154 of an acre of land required by the district board of Tippera, for improvement of Chandpur Road, Part III, at Mahamayabazar, in the village of Lodhergaon, jurisdiction list No. 52, thana Chandpur, pargana Sakdi Kardi Mahabatpur, district Tippera.

Malda. — No. 12944L.A. — 7th September 1936.—Whereas it appears to the Governor in Council that land is likely to be required to be taken by Government at the expense of the Harishchandrapur union board for a public purpose, viz., for a public play ground for boys in the village of Uttar Harishchandrapur, jurisdiction list No. 102, thana Harishchandrapur, pargana Ekbarpur, district Malda, it is hereby notified that for the above purpose a piece of land comprising portion of cadastral plots Nos. 1602 and 1603, and measuring, more or less, 4·43 acres, is likely to be required within the aforesaid village of Uttar Harishchandrapur.

This notification is made, under the provisions of section 4 of Act I of 1894, to all whom it may concern.

A plan of the land may be inspected in the office of the Collector of Malda.

In exercise of the powers conferred by the aforesaid section, the Governor in Council is pleased to authorise the officers for the time being engaged in the undertaking, with their servants and workmen, to enter upon and survey the land and do all other acts required or permitted by that section.

Any person interested in the above land, who has any objection to the acquisition thereof, may, within thirty days after the date on which public notice of the substance of this notification is given in the locality, file an objection in writing before the Collector of Malda.

ERRATUM.

Burdwan.—No. 12950 L.A.—7th September 1936. In line 9 of the notification No. 3100 L.A., dated the 25rd February 1935, under section 4 of the Land Acquisition Act, published at page 441, Part I of the *Calcutta Gazette* of the 28th idem, in respect of the proposed acquisition of 0·056 of an acre of land required by the district board of Burdwan for the construction of an approach road to Kalna inspection bungalow in the village of Kalna, jurisdiction list No. 164, thana Kalna, district Burdwan, *for* the word "Ambicaraipur" read "Ambica."

DECLARATIONS.

Bankura.—No. 12759L.A.—2nd September 1936.—Whereas it appears to the Governor in Council that land is required to be taken by Government at the expense of Messrs. B. N. Elias & Co., Ltd., for the construction of an Electric Power House, in the villages of Bankura and Patpur, jurisdiction lists Nos. 211 and 212, respectively, in thana Bankura, pargana Chhatna, district Bankura, it is hereby declared that for the above purpose a piece of land comprising cadastral plots Nos. 978, 979 and 981 and parts of cadastral plots Nos. 977, 980, 982, 983, 985 and 986 in the village of Bankura and cadastral plots Nos. 927, 981 and 982 in the village of Patpur, and measuring, more or less, 4·50 acres, is required within the aforesaid villages of Bankura and Patpur.

This declaration is made, under the provisions of section 6 of Act I of 1894, to all whom it may concern.

A plan of the land may be inspected in the office of the Collector of Bankura.

24-Parganas.—No. 12872L.A.—5th September 1936.—Whereas it appears to the Governor in Council that land is required to be taken by Government at the public expense for a public purpose, viz., for proposed siding to the Calcutta Electric Supply Corporation, Limited, for new generating station, in the village of Mulajor, jurisdiction list No. 18, thana Jagaddal, pargana Havelisahar, district 24-Parganas, it is hereby declared that for the above purpose a piece of land comprising portions of cadastral plots Nos. 82, 83, 84, 86, 90, 92 and 1104 and measuring, more or less, 0·4329 of an acre, is required within the aforesaid village of Mulajor.

This declaration is made, under the provisions of section 6 of Act I of 1894, to all whom it may concern.

A plan of the land may be inspected in the office of the Executive Engineer, Calcutta district, E. B. Railway, as well as in that of the Land Acquisition Deputy Collector, Alipore, 24-Parganas.

Burdwan.—No. 12885L. A.—5th September 1936.—Whereas it appears to the Governor in Council that land is required to be taken by Government at the expense of the Asansol Municipality for a public purpose, viz., for the outfall works of the sewerage scheme, in the village of Asansol Municipality, jurisdiction list No. 24, thana Asansol, pargana Shergarh, district Burdwan, it is hereby declared that for the above purpose a piece of land comprising cadastral survey plot Nos. 5270, 5272, 5273 and parts of cadastral survey plot Nos. 5262, 5263, 5266-5269, 5271, 5274-5276, 5281, 5286, 5292, 5293, 5488-5490, 5500 and 7054 and measuring, more or less, 2·71 acres, is required within the aforesaid village of Asansol Municipality.

This declaration is made, under the provisions of section 6 of Act I of 1894, to all whom it may concern.

A plan of the land may be inspected in the office of the Special Land Acquisition Officer, Burdwan, as well as in that of the Chairman, Asansol Municipality.

24-Parganas.—No. 12897L.A.—5th September 1936.—Whereas it appears to the Governor in Council that land is required to be taken by Government at the expense of the Calcutta Electric Supply Corporation, Ltd., for a public purpose, viz., for the construction of a Switch House on the Nangi Bazar road, in the village of Par Bangala, jurisdiction list No. 18, thana Budge Budge, pargana Balia, district 24-Parganas, it is hereby declared that for the above purpose a piece of land comprising portion of cadastral plot No. 227 and measuring, more or less, 0·031 of an acre is required within the aforesaid village of Par Bangala.

This declaration is made, under the provisions of section 6 of Act I of 1894, to all whom it may concern.

A plan of the land may be inspected in the office of the Land Acquisition Deputy Collector, Alipore, 24-Parganas.

Rangpur.—No. 12900L.A.—5th September 1936.—Whereas it appears to the Governor in Council that land is required to be taken by Government at the public expense for a public purpose, viz., for construction of a drain by the Telegraph Department at Saidpur, in the village of Koya, jurisdiction list No. 7, thana Saidpur, pargana Kazirhat, zilla Rangpur, it is hereby declared that for the above purpose a piece of land measuring more or less, 0·03241 of an acre comprising cadastral plot No. 6628 (part), is required within the aforesaid village of Koya.

This declaration is made, under the provisions of section 6 of Act I of 1894, to all whom it may concern.

A plan of the land may be inspected in the office of the Subdivisional Officer, Nilphamari.

Rajshahi.—No. 12903L.A.—5th September 1936.—Whereas it appears to the Governor in Council that land is required to be taken by Government at the expense of the Rajshahi district board for a public purpose, viz., for Nepaldighi Gobindapur drainage scheme in the villages of Baladkhal, jurisdiction list No. 278, Goaldighi, jurisdiction list No. 355, Talgachi, jurisdiction list No. 276, Dhakupara, jurisdiction list No. 272 and in the village of Nepaldighi, jurisdiction list No. 277, thana Natore, parganas Laskarpur, Chhindabaju and Digha, district Rajshahi, it is hereby declared that for the above purpose a piece of land comprising cadastral part plots Nos. 493, 494, 495, 724, 725, 726, 745, 704, 705, 706, 664, 665, 680, 681, 683, 684, 685, 1070, 1071, 1073, 1076, 1077, 1078, 1084, 1085 and 1166 of mauza Baladkhal, part plots Nos. 14, 17, 18, 207, 212, 213, 214, 215, 217, 218, 219, 220, 436, 438, 439, 441, 442, 481, 482, 483, 611, 618, 619, 621, 622, 623

and 636 of mauza Goaldighi, part plots Nos. 69, 70, 76, 83, 105, 106, 107, 108, 109, 110, 120, 121, 122, 123, 124, 125, 126, 130, 131, 132, 133, 135, 136, 137, 138, 139, 141, 142, 143, 150, 152, 155, 156, 157, 164, 165, 166, 183, 184, 195, 196, 211, 214, 215, 233, 265, 272, 290, 294, 295, 297, 298, 300, 301, 309, 310, 311, 312, 313, 316, 317, 320, 321, 327, 333, 338, 339, 343, 351, 352 and 353 of mauza Talgachi, part plots Nos. 136, 137, 138, 139, 140, 141, 142, 143, 144, 145, 582, 583, 584 and 585 of mauza Dhacopara and part plots Nos. 204, 205, 206, 208, 217, 836, 854, 855, 856, 857 and 762 of mauza Nepaldighi, measuring, more or less, 12·69 acres is required within the aforesaid villages of Baladkhal, Goaldighi, Talgachi, Dhacopara and Nepaldighi.

This declaration is made, under the provisions of section 6 of Act I of 1894, to all whom it may concern.

A plan of the land may be inspected in the office of the Subdivisional Officer of Nator.

Chittagong.—No. 12938 L.A.—7th September 1936.—Whereas it appears to the Governor in Council that land is required to be taken by Government at the public expense for a public purpose, viz., for widening the two existing drains at the landing ground for aeroplanes, in the village of Purba-Patenga, police-station Double Moorings, zilla Chittagong, it is hereby declared that for the above purpose pieces of land comprising the parts of revisional survey plots Nos. 1293, 1302, 1303, 1301, 1298, 1147, 1146, 1121, 1122, 1123, 1139, 1140, 1138, 1141, 1034, 1035, 1033 and 1032, and measuring more or less, 1·40 acres, are required within the aforesaid village of Purba-Patenga.

This declaration is made, under the provisions of section 6, Act I of 1894, to all whom it may concern.

A plan of the land may be inspected in the office of the Collector of Chittagong.

Burdwan.—No. 12947L.A.—7th September 1936.—Whereas it appears to the Governor in Council that land is required to be taken by Government at the expense of the district board, Burdwan, for a public purpose, viz., for the construction of an approach road to Kalna inspection bunglow, in the village of Kalna, jurisdiction list No. 164, in thana Kalna, pargana Ambica, district Burdwan, it is hereby declared that for the above purpose a piece of land comprising parts of cadastral survey plot Nos. 630 and 634, and measuring, more or less, 0·056 of an acre, is required within the aforesaid village of Kalna.

This declaration is made, under the provisions of section 6 of Act I of 1894, to all whom it may concern.

A plan of the land may be inspected in the office of the Land Acquisition Officer, Kalna, as well as in that of the Chairman, district board, Burdwan.

Murshidabad.—No. 12953L.A.—7th September 1936.—Whereas it appears to the Governor in Council that land is required to be taken by Government at the expense of the district board, Murshidabad, for a public purpose, viz., for roadside drain on the 3rd mile of Bharatpur-Salar Road in the village of Binodia, jurisdiction list No. 84, pargana Fatesing, zilla Murshidabad, it is hereby declared that for the above purpose a piece of land measuring, more or less, 0·0688 of an acre and comprising portions of cadastral plots Nos. 999, 1287, 1281, 1288 and 1290, is required within the aforsaid village of Binodia.

This declaration is made, under the provisions of section 6 of Act I of 1894, to all whom it may concern.

A plan of the land may be inspected in the office of the Subdivisional Officer, Kandi.

Miscellaneous.

NOTIFICATION.

No. 12879 Mis.—5th September 1936.—The following candidates have passed the Revenue Agents' Examination held in August 1936:—

Burdwan Division.

Burdwan district.

Babu Monoranjan Choudhury.

Bankura district.

Babu Manmatha Nath Sen Gupta.
Babu Shiba Prasad Chatterjee.

Midnapore district.

Babu Krishna Lal Banerjee.
Babu Nagendra Nath Bhunia.
Babu Indu Bhusan Bhattacharjee.
Babu Hem Chandra Ghosal.

Hooghly district.

Babu Gour Hari Pramanick.
Babu Debendra Nath Bhattacharya.
Babu Kali Das Mukherjee.

Presidency Division.

24-Parganas district.

Babu Subuddhi Kumar Bhattacharjee.
Babu Sudhir Chandra Basu.
Babu Bibhuti Bhusan Choudhury.

Nadia district.

Babu Bibhuti Bhusan Chandra.

Dacca Division.

Dacca district.

Babu Upendra Kumar Saha.
Babu Sailendra Mohan Mazumdar.

Mymensingh district.

Babu Sudhir Mohan Ghosh.
Maulvi Abdul Aziz Khan.
Maulvi Syed Azizul Hoque.
Maulvi Aftabuddin Khan.
Maulvi Syeduddin Ahmed.

Faridpur district.

Babu Madhu Sudan Saha.
Babu Baisnab Das Biswas.

Bakarganj district.

Babu Sukumar Ghose.
Babu Hemanta Kumar Sen Gupta.

Chittagong Division.

Chittagong district.

Babu Sashanka Mohan Chowdhury.
Maulvi Abdus Sobhan.
Maulvi Abul Sharif Chowdhury.
Babu Nihar Nalini Sen Gupta.
Maulvi Abdul Latif.
Babu Sudhangshu Bimal Chowdhury.
Maulvi Manir Ahmed.

Tippera district.

Babu Girindra Chandra Bhowmik.
Maulvi Bilayet Hossain.

Noakhali district.

Babu Chandra Kumar Das.
Babu Harendra Kumar Saha.
Babu Upendra Lal Das.
Babu Matilal Saha.
Babu Nalini Mohan De.

Rajshahi Division.

Dinajpur district.

Maulvi Mohammed Ahasanuddin.

Rangpur district.

Babu Amarandra Nath Chakravorty.

Pabna district.

Babu Sudhir Chandra Das Gupta.

Excise.

NOTIFICATIONS.

Minister-in-charge: The Hon'ble Sir Bijoy Prasad Singh Roy, Kt.

24-Parganas.—No. 920Ex.—1st September 1936.—In exercise of the power conferred by clause (*b*) of sub-section (*2*) of section 7 of the Bengal Excise Act, 1909 (Bengal Act V of 1909), the Government of Bengal (Ministry of Excise) are pleased to appoint the Superintendent of Police, 24-Parganas, as an additional member (*ex-officio*) of the Calcutta Licensing Board constituted in notification No. 651 Ex., dated the 10th August 1935.

24-Parganas.—No. 928Ex.—1st September 1936.—In exercise of the power conferred by clause (*4*) (*c*) of section 2 of the Bengal Excise Act, 1909 (Bengal Act V of 1909), and in supersession of notification No. 749 Ex., dated the 2nd June 1925, the Government of Bengal (Ministry of Excise) are pleased to declare that the portion of the Garden Reach Municipality situated outside the jurisdiction of the Commissioner of Police, Calcutta, and of which the boundaries are noted below, shall be included in the Calcutta district, namely:—

North—Garden Reach Road, Badartola Road, Eastern cut of the Dum Dum drain and river Hooghly.

South—The northern border of villages Ramdashati, Makhalhati, Panchur, Jagannathnagore and Akra, as delineated in the survey settlement operation till it meets the river Hooghly.

East—Rameswarpur Road, Paharpur Road up to the point where it meets the western boundary of the Port Commissioner's land and the western boundary of the Port Commissioner's land lying on the south of Paharpur Road.

West—River Hooghly.

No. 958Ex.—4th September 1936.—In exercise of the power conferred by sub-section (*1*) of section 8 of the Bengal Tobacco (Sales Licensing) Act, 1935 (Bengal Act XIV of 1935), the Governor in Council is pleased to empower the Superintendents of Excise and the Inspectors of Excise holding charge of districts to exercise power of compounding any offence punishable under that Act to the extent specified in the said sub-section.

No. 959Ex.—4th September 1936.—In exercise of the power conferred by section 13 of the Bengal Tobacco (Sales Licensing) Act, 1935 (Bengal Act XIV of 1935), the Governor in Council is pleased to empower the Superintendents of Excise and the Inspectors of Excise holding charge of districts to exercise the power of issuing summons and warrants of arrest referred to in the said section.

No. 977Ex. — 7th September 1936. —In exercise of the power conferred by section 15 of the Opium Act, 1878 (I of 1878), the Government of Bengal (Ministry of Excise) are pleased to authorise the following officers to exercise all the powers mentioned in the said section, namely:—

1. All officers of the Customs Department.

2. The following officers of any railway administration controlled by the Government or by a Railway Company:—

(*a*) Station Masters

(*b*) Traffic Inspectors

(*c*) Officers in charge of Travelling Ticket Inspectors and Checkers.

3. European officers of the Steamship Companies who are in charge of agencies.

J. B. KINDERSLEY,

Secy. to the Govt. of Bengal.

Orders by the Commissioner of Excise and Salt, Bengal.

No. 34Exc.—7th September 1936.—Maulvi Amir Hossain, Inspector of Excise and Salt, in charge, Dinajpur, is, on relief by Babu Hari Das Sen, transferred to Calcutta in the Matches (Excise) Preventive work in the public interest.

A. S. LARKIN,

Commr. of Excise and Salt, Bengal (offg.).

BOARD OF REVENUE, BENGAL.

NOTIFICATION.

No. 12699Elec.—7th September 1936.—It is hereby notified that Mr. R. M. Sassoon, the candidate for election to the Bengal Legislative Council from the Presidency and Burdwan (European) constituency, filed on the 2nd September 1936 his return of election expenses and the declaration in respect thereof as required by clauses (*1*) and (*3*) of rule 19 of the Bengal Electoral Rules and Regulations, 1926. This can be inspected in the office of the Board of Revenue on payment of a fee of Re. 1 between the hours of 11 a.m. and 3 p.m. for one week from the publication of this notification in the gazette.

S. BANERJEE,

Secy., Board of Revenue, Bengal.

TREASURY NOTICES.

Dinajpur Collectorate, the 2nd September 1936.

Uncovenanted Deputy Collector Maulvi Serajul Karim is placed in the executive charge of the Dinajpur Treasury, with effect from the 1st September 1936, and is authorised to draw bills on other treasuries.

M. K. KIRPALANI, *Collector.*

Jessore, the 3rd September 1936.

Sub-Deputy Collector Babu Dhirendra Chandra Nag has temporarily been placed in executive charge of the Jessore Treasury, with effect from the forenoon of the 3rd September 1936, and is authorised to draw bills on other treasuries.

S. DUTT, *Collector.*

Orders by the Deputy Accountant-General, Bengal.

The Treasury Buildings, Calcutta, the 31st August 1936.

It is notified that the refund order Book No. 7184 containing 50 orders "white" is in use by the Income-Tax Office, Military Circle, Meerut, with effect from the 18th August 1936.

The Treasury Buildings, Calcutta, the 3rd September 1936.

It is notified that the refund order Book No. 182 containing 50 orders "pink" is in use by the Income-Tax Office, Railways and Miscellaneous Salaries Circle, Calcutta, with effect from the 26th August 1936.

C. BHASKARAIYA,

Dy. Accountant-General, Bengal.

ORDERS BY COMMISSIONERS OF DIVISIONS.

Burdwan Division—Chinsura.

No. 5229J.G.—4th September 1936.—In accordance with the provisions of rule 63 (2) of Chapter IV of the Bengal Jail Code, Volume I, I hereby appoint Dr. V. E. Ambett as a non-official visitor of the Kalna Sub-Jail in the district of Burdwan for a period of two years from the 20th September 1936, *i.e.*, from the day following the date of expiry of the term of Dr. I. R. Anderson.

L. B. BURROWS, *Commissioner.*

Burdwan, the 22nd August 1936.

It is hereby notified for general information that, under section 13 of the Bengal Village Self-Government Act, 1919 (Bengal Act V of 1919), read with rule 35 of the rules for the election and appointment of members of union boards, etc., Babu Satish Chandra Banerjee has been duly elected to be a member of Ward No. 1 of the Searsol union board in police-station Raniganj in the Asansol subdivision of Burdwan, *vice* Babu Sananka Kumar Nayek, removed.

It is hereby notified for general information that, under section 13 of the Bengal Village Self-Government Act, 1919 (Bengal Act V of 1919), read with rule 35 of the rules for the election and appointment of members of union boards, etc., Babu Damodar Das Nayak has been duly elected to be a member of Ward No. II of the Gogla union board in police-station Faridpur in the Asansol subdivision of Burdwan, *vice* Babu Sananka Kumar Nayek, removed.

It is hereby notified for general information that, under section 13 of the Bengal Village Self-Government Act, 1919 (Bengal Act V of 1919), read with rule 35 of the rules for the election and appointment of members of union boards, etc., Babu Ram Raghab Hazra has been duly elected to be a member of Ward No. II of the Kajora union board in police-station Ondal in the Asansol subdivision of Burdwan, *vice* Babu Ram Ranjan Hazra, removed.

It is hereby notified for general information that, under section 13 of the Bengal Village Self-Government Act, 1919 (Bengal Act V of 1919), read with rule 35 of the rules for the election and appointment of members of union boards, etc., Babu Bibhuti Bhusan Dey has been duly elected to be a member of Ward No. II of the Malandighi union board in police-station Kaksa in the Asansol subdivision of Burdwan, *vice* Babu Khudiram Mandal, deceased.

It is notified for general information that, under section 13 of the Bengal Village Self-Government Act, 1919 (Bengal Act V of 1919), read with rule 35 of the rules for the election and appointment of members of union boards, etc., Babu Gurupada Goswami has been duly elected to be a member of Ward No. II of the Jemari union board in police-station Raniganj in the Asansol subdivision of Burdwan, *vice* Babu Panchanan Chatterjee, removed.

R. JOHNSTON, *District Magistrate.*

Chinsura, the 3rd September 1936.

No. 8430J.G.—It is hereby notified for general information that, under section 13 of the Bengal Village Self-Government Act, 1919 (Bengal Act V of 1919), read with rule 35 of the rules for the election and appointment of members of union boards, etc., Babu Krishna Dhan Guin has been duly elected to be a member for Ward No. 1 of the Gurope union board in police-station Dhanikhali in the Sadar subdivision of the district of Hooghly, *vice* Babu Tincori De, resigned.

No. 8432J.G.—It is hereby notified for general information that, under section 13 of the Bengal Village Self-Government Act, 1919 (Bengal Act V of 1919), read with rule 35 of the rules for the election and appointment of members of union boards, etc., Babu Ardhendu Sekhar Singh Roy has been duly elected to be a member for Ward No. IV of the Gopinathpur union board in police-station Dhanikhali in the Sadar subdivision of the district of Hooghly, *vice* Babu Bhut Nath Porel, deceased.

S. P. GHOSE, *District Magistrate.*

Bankura, the 2nd September 1936.

No. 5161J.—It is hereby notified for general information that, under section 13 of the Bengal Village Self-Government Act, 1919 (Bengal Act V of 1919), read with rule 35 of the rules for election and appointment of members of union boards, Babu Dina Bandhu Palit has been elected as a member of Uliara union board in police-station Vishnupur in the Vishnupur subdivision of the district of Bankura, *vice* Babu Akshya Kumar Palit, deceased.

No. 5164J.—It is hereby notified for general information that, under section 13 of the Bengal Village Self-Government Act, 1919 (Bengal Act V of 1919), read with rule 35 of the rules for election and appointment of members of union boards, Babu Nibaran Chandra Nandi has been elected as a member of Hetia union board in police-station Joypur in the Vishnupur subdivision of the district of Bankura, *vice* Babu Jagat Chandra Koley, deceased.

J. M. CHATARJI, *District Magistrate.*

Orders by the Deputy Inspector-General of Police, Burdwan Range.

Chinsura.—No. 6745.—4th September 1936. —Babu Jatindra Mohan Sen Gupta, officiating Inspector, Mindnapore, was granted 25 days' privilege leave from 12-7-1936, p.m. to 6-8-1936, p.m.

This cancels the orders under notification —Chinsura—No. 6547—21st August 1936— published in the *Calcutta Gazette*, dated the 27th August 1936.

J. M. MACKENZIE,
Deputy Inspector-General of Police (offg.).

Chittagong Division—Chittagong.

Chittagong, the 1st September 1936.

It is hereby notified for general information that, under section 13 of the Bengal Village Self-Government Act, 1919 (Bengal Act V of 1919), read with rule 36 of the rules for the election and appointment of members of union boards, Maulvi Abul Khair has been appointed to be a member of Kharandwip union board No. VII in police-station Boalkhali in the Sadar (B) subdivision of the Chittagong district, *vice* Munshi Mahammad Ismail, removed.

H. BANERJEE, *Addl. District Magistrate.*

Orders by the Deputy Inspector-General of Police, Bakarganj Range.

Barisal.—No. 4263.—3rd September 1936. —The orders under notification—Barisal—No. 2560—21st May 1936—published in the *Calcutta Gazette*, dated the 28th May 1936, granting 15 days' leave on average pay to Babu Nagendra Bihari Basu, Court Inspr., Tippera, are hereby cancelled.

G. H. MANNOOCH,

Deputy Inspector-General of Police (offg.).

Dacca Division—Dacca.

No. 4525J.—3rd September 1936.—Maulvi Muhammad Ershad, Sub-Deputy Collector and Circle Officer, Barhatta Circle, in the Netrakona subdivision of the district of Mymensingh, is transferred to Mymensingh as Circle Officer, Sadar Circle.

No. 4549J.—4th September 1936.—Babu Upendra Kumar Mitra, Sub-Deputy Collector and Khas Mahal Officer, Dacca, is allowed leave on average pay for three weeks, under rule 81 (*b*) (*ii*) of the Fundamental Rules, with effect from the 18th August 1936.

No. 3195R.—5th September 1936.—In exercise of the power delegated to me by Government notification No. 10106 L.R., dated the 14th July 1936, and with reference to notification No. 10092L.R., dated the 14th July 1936, in which certain persons were appointed to be Chairman and members of the Malijhikanda Debt Settlement Board, I hereby direct that under section 4 of the Bengal Agricultural Debtors Act (Act VII of 1936) the name of Babu Bateswar Shaha be removed from the list of members.

2. I hereby appoint, under section 3 (2) of the said Act, Babu Narendra Nath Ray to be a member of the aforesaid Board in place of Babu Bateswar Shaha.

W. H. NELSON, *Commissioner.*

Faridpur, the 1st September 1936.

No. 7708J.—It is hereby notified for general information that, under section 13 of the Bengal Village Self-Government Act, 1919 (Bengal Act V of 1919), Mahomed Munsaral Hoque Chowdhury has been duly elected to be a member of the Kathi union board in police-station Gopalganj in the Gopalganj subdivision of the Faridpur district, *vice* Hazi Nehaluddin Chowdhury, deceased.

Faridpur, the 4th September 1936.

No. 7774J.—It is hereby notified for general information that, under section 13 of the Bengal Village Self-Government Act, 1919 (Bengal Act V of 1919), Babu Ramdhan Saha has been duly elected to be a member of the Amtali union board in police-station Kotwalipara in the Gopalganj subdivision of the Faridpur district, *vice* Babu Keshab Lal Madhyasta, removed.

No. 7776J.—It is hereby notified for general information that, under section 13 of the Bengal Village Self-Government Act, 1919 (Bengal Act V of 1919), Munshi Mojahar Ali Biswas has been appointed to be a member of the Megchami union board in police-station Baliakandi in the Goalundo subdivision of the Faridpur district, *vice* Munshi Omed Shaikh, deceased.

K. A. L. HILL, *District Magistrate.*

Mymensingh, the 4th September 1936.

No. 867C.—It is hereby notified for general information that—

(*a*) Under sub-section (*2*) of section 6 of the Bengal Village Self-Government Act, 1919 (Bengal Act V of 1919), the following gentlemen have been duly elected to be members of the undermentioned union boards in the Sadar subdivision of the Mymensingh district:—

Kotwali thana.

Kusthia union board.

Ward No. I.

Munshi Kajimuddin Sarkar.
Babu Girish Chandra De.

Ward No. II.

Munshi Azumuddin Sarkar.
Munshi Abed Ali Sarkar.

Ward No. III.

Munshi Janab Ali Sarkar.
Babu Naresh Chandra Bishnu.

Borerchar union board.

Ward No. I.

Munshi Taibuddin Sarkar.
Munshi Iraj Ali Sheik.
Munshi Marfat Mandal.
Munshi Fazar Ali Sarkar.
Munshi Abdul Mazid Sarkar.
Babu Kailash Chandra Das.

Paranganj union board.

Ward No. I.

Munshi Injil Ali Sarkar.
Munshi Kasam Ali Sarkar.

Ward No. II.

Munshi Mafizuddin Sarkar.
Munshi Saiyad Ali Sarkar.

Ward No. III.

Munshi Sadak Ali Sarkar.
Babu Sarat Chandra Saha.

Sirta union board.

Ward No. I.

Munshi Jaliluddin Kaji.
Munshi Samiruddin Sarkar.
Munshi Asimuddin Sarkar.

Ward No. II.

Munshi Latu Sarkar.
Munshi Nazimuddin Sarkar.
Munshi Hafizuddin Mukhtear.

Char Iswardia union board.

Ward No. I.

Munshi Ibrahim Sarkar.
Munshi Md. Khaliluddin.
Babu Dhirendra Lal Guha Roy.

Ward No. II.

Munshi Md. Rushan Ali.
Munshi Aftabuddin Sarkar.
Munshi Md. Jubed Ali Sarkar.

Char Nilakshia union board.

Ward No. I.

Munshi Maniruddin Sheik.
Munshi Muzaffar Sarkar.
Munshi Yasin Sarkar.

Ward No. II.

Munshi Yusuf Fakir.
Munshi Ahamed Ali Sarkar.
Babu Sarat Chandra Saha.

Akua union board.

Ward No. I.

Munshi Md. Wafijuddin.
Babu Satish Chandra Bhowmik, B.L.

Ward No. II.

Munshi Hassen Sarkar.
Munshi Naimuddin Sarkar.

Ward No. III.

Munshi Nasaruddin Sarkar.
Maulvi Md. Abdul Majid, B.L.

Khagdahar union board.

Ward No. I.

Munshi Reazuddin Kari.
Munshi Azmat Ali Ahmed.

Ward No. II.

Munshi Md. Taleb Ali.
Munshi Hasan Ali.

Ward No. III.

Munshi Abdul Khaleque.
Munshi Megha Mandal.

Dapunia union board

Ward No. I.

Munshi Pashan Ali Sarkar.
Munshi Khorshed Ali Sarkar.
Munshi Abdul Matin.

Ward No. II.

Munshi Wayezuddin Ahmed.
Maulvi Md. Lokman Ali, B.A.
Munshi Md. Ismail.

Ghagra union board.

Ward No. I.

Munshi Hossen Ali Sarkar.
Munshi Abdul Gani Sarkar.
Munshi Ekin Ali Sarkar.

Ward No. II.

Munshi Iman Ali Master.
Babu Joy Chandra Sarkar.
Babu Debendra Chandra De.

Bhabakhali union board.

Ward No. I.

Munshi Omar Ali Mirdha.
Munshi Abdul Hai Kaji

Ward No. II.

Maulvi Md. Umed Ali, B.L.
Dr. Jaliluddin Ahmed.

Ward No. III.

Babu Jogesh Chandra Chakraborty.
Maulvi Osman Ali Sarkar.

Muktagacha thana

Dulla union board.

Ward No. I.

Munshi Meherullah Sarkar.
Munshi Abdul Aziz Sarkar.

Ward No. II.

Munshi Muchu Sheik.
Munshi Hamidar Rahman.

Ward No. III.

Munshi Osman Gani Sarkar.
Munshi Joad Ali Sarkar.

Baragram union board.

Ward No. I.

Munshi Mohsen Ali Master.
Munshi Altaf Ali Sarkar.

Ward No. II.

Munshi Alimuddin.
Munshi Naimuddin Sarkar.

Ward No. III.

Munshi Sonaulla Sarkar.
Babu Girija Prasad Bal.

Kumargata union board.

Ward No. I.

Munshi Gamiruddin Sarkar.
Munshi Abdul Rashid Sarkar.

Ward No. II.

Munshi Faizuddin Sarkar.
Babu Bharat Chandra Das.

Ward No. III.

Munshi Mainuddin Sarkar.
Munshi Wahed Ali Master.

Mankun union board.

Ward No. I.

Munshi Nasimuddin Master.
Munshi Asadulla Mandal.

Ward No. II.

Munshi Md. Reazuddin.
Munshi Arman Ali Sarkar.

Ward No. III.

Syed Atikar Rahman.
Babu Dharani Kanta Bhattacharyya.

Ghoga union board.

Ward No. I.

Babu Madhusudhan Roy.
Babu Rajib Lochan Das.

Ward No. II.

Munshi Hossen Ali Talukdar.
Munshi Amiruddin Khan.

Ward No. III.

Babu Jitendra Nath Basu.
Babu Makhan Chandra Roy.

Daogaon union board.

Ward No. I.

Munshi Sona Ullah Sarkar.
Munshi Hasan Ali.

Ward No. II.

Munshi Abdul Samad.
Maulvi Tamij Uddin.

Ward No. III.

Munshi Akkel Ali Sarkar.
Munshi Samiruddin Khan.

Kashimpur union board.

Ward No. I.

Munshi Manik Uddin Talukdar.
Babu Krishna Ch. Acharyya.

Ward No. II.

Babu Chandra Kishore Nandi.
Munshi Abdul Wahed Pandit.

Ward No. III.

Munshi Md. Fayzur Rahman, B.A.
Munshi Entazuddin Talukdar.

Kheruajani union board.

Ward No. I.

Babu Lalit Mohan Chanda.
Munshi Tamij Uddin Ahmed.

Ward No. II.

Munshi Saman Ali Master.
Munshi Newaj Ali Sarkar.

Ward No. III.

Munshi Meher Ali Master.
Munshi Ahmed Ali Master.

Fulbaria thana.

Puthijana union board.

Ward No. I.

Munshi Ramjan Ali Sarkar.
Munshi Harip Sarkar.

Ward No. II.

Babu Srish Ch. Ray.
Babu Ashutosh Ray.

Ward No. III.

Babu Annada Prasad Ganguli, B.L.
Maulvi Yar Mohammad.

Kushmail union board.

Ward No. I.

Babu Satish Chandra Choudhury, son of Bhagaban Chandra Choudhury.

Babu Satish Chandra Choudhury, son of Mahim Chandra Choudhury.

Munshi Abdul Gafur.

Ward No. II.

Munshi Abbas Ali Tarafdar.
Munshi Mobarak Ali.
Munshi Jalaluddin Sarkar.

Balian union board.

Ward No. I.

Munshi Intaj Ali Sarkar.
Munshi Sayad Ali Doctor.

Ward No. II.

Munshi Jaban Ali Master.
Babu Prasanna Kumar Tarafdar.

Ward No. III.

Munshi Rajab Ali.
Maulvi Hossain Ali.

Fulbaria union board.

Ward No. I.

Munshi Afsaruddin Sarkar.
Munshi Naimuddin Sarkar.

Ward No. II.

Maulvi Sekandar Ali.
Munshi Omed Ali Sarkar.

Ward No. III.

Munshi Madan Mandal.
Babu Ramkanai Sarkar.

Radhakanai union board.

Ward No. I.

Munshi Keramat Ali Sarkar.
Munshi Reazuddin Tarafdar.
Munshi Siraz Ali Sarkar.
Munshi Jubed Ali Choudhury.

Ward No. II.

Munshi Nayeb Ali Sarkar.
Munshi Rajab Ali Mandal.

Gaffargaon thana.

Rasulpur union board.

Maulvi Md. Habibullah.
Maulvi Md. Abdus Samad.
Maulvi Md. Mizanur Rahman.
Maulvi Md. Najumuddin Molla.
Babu Surendra Sundar De.
Babu Mahim Chandra Debnath.

Niguari union board.

Maulvi Abdul Halim Khan.
Maulvi Hashmatullah Khan.
Maulvi Abdul Gafur Khan.
Abdul Hakim Khan.
Maulvi Hafiz Fazlur Rahman, Ran Bhawali.
Haji Bajit Khan.

Char Algi union board.

Maulvi Md. Izzatullah.
Munshi Joynal Abedin.
Munshi Rahimuddin Master.
Munshi Rustum Ali Sarkar.
Munshi Taripuddin Sarkar.
Munshi Azitullah Sarkar.

Trisal thana.

Dhanikhola union board.

Maulvi Hossen Ali.
Maulvi Yakub Ali Mandal.
Maulvi Jabed Ali Sarkar.
Maulvi Shamsher Ali Khan.
Maulvi Abdul Haque Mandal.
Maulvi Jabed Ali Master.

Bailor union board.

Munshi Maniruddin Sarkar.
Munshi Syedur Rahman Kazi.
Munshi Md. Abdur Rahim.
Munshi Mahammad Ali Tarafdar.
Hazi Md. Hossen Ulla.
Babu Kula Chandra Pandit.

Kathal union board.

Munshi Ashan Ali Tarafdar.
Munshi Altab Alj Sarkar.
Munshi Madan Ali Sarkar.
Munshi Abdu Samad.
Munshi Rajab Ali Master.
Babu Purna Chandra Datta.

Kanihari union board.

Munshi Mohammad Ali Mandal.
Munshi Abdul Rahman Fakir.
Maulvi Abdul Gafur Khan.
Babu Hem Chandra Ray.
Babu Jamini Kishore Mazumdar.
Babu Sarat Chandra Roy.

Rampur union board.

Munshi Umed Ali Mia.
Munshi Magan Ali Sarkar.
Munshi Syed Ali Sarkar.
Munshi Meher Ali Mia.
Munshi Meher Ali Sarkar.
Munshi Bechu Sarkar.

Trisal union board.

Munshi Hossain Ali Sarkar.
Munshi Arfan Ali Sarkar.
Munshi Rajab Ali Sarkar.
Munshi Arfan Ali Mandal.
Munshi Babujan Sarkar.
Maulvi Rashid Ahmed.

Shakhua union board.

Maulvi Wayez Uddin.
Maulvi Umed Ali Moktear.
Maulvi Intaz Ali Mir.
Maulvi Sekh Komarazzoman.
Maulvi Abdul Hamid Fakir.
Maulvi Adam Ali Hafez.

Balipara union board.

Babu Jnaneswar Chakraborty.
Babu Sashi Mohan Kar.
Babu Jogendra Mohan Deb.
Maulvi Abdul Hakim.
Maulvi Abdur Rahman Mian.
Munshi Imam Uddin.

(*b*) Under sub-section (*3*) of section 6 of the Bengal Village Self-Government Act, 1919 (Bengal Act V of 1919), the following gentlemen have been appointed by the District Magistrate of Mymensingh to be members of the undermentioned union boards in the Sadar South subdivision of the Mymensingh district:—

Kotwali police-station.

Kusthia union board.

Munshi Miazuddin Sarkar.
Munshi Shamseruddin.
Babu Satish Chandra De Tarafdar.

Borerchar union board.

Munshi Abdul Jabbar Sarkar.
Munshi Medhu Sarkar.
Munshi Iman Ali Mandal.

Paranganj union board.

Munshi Abdul Rahman Sarkar.
Munshi Abdul Majid.
Babu Gagan Chandra Saha Roy.

Sirta union board.

Munshi Jahuruddin Sarkar.
Munshi Ajimuddin Sarkar.
Babu Ram Mangal Gope.

Char Iswardia union board

Munshi Ishaque Mandal.
Munshi Mia Hossain.
Munshi Manu Bepari.

Char Nilakshia union board.

Munshi Kalimuddin Sarkar.
Munshi Abdul Hossain Master.
Munshi Yakub Sarkar.

Akua union board.

Maulvi Md. Abdulla, B.A.
Pandit Azhar Ali.
Babu Ramesh Chandra Das.

Khagdahar union board.

Maulvi Md. Akbar Ali, B.A.
Maulvi Abed Ali Talukdar.
Babu Sarat Chandra Nandi.

Dapunia union board.

Munshi Abbas Sarkar.
Munshi Osman Gani.
Babu Judhistir Chandra De.

Ghagra union board.

Munshi Hafizuddin.
Munshi Amiruddin.
Munshi Hamid Ali Sarkar.

Bhabakhali union board.

Maulvi Abbas Ali.
Munshi Afsar Ali Sarkar.
Babu Sonatan Saha.

Muktagacha police-station.

Dulla union board.

Babu Rajmohan Sarma Sarkar.
Babu Chandra Kishore De.
Munshi Md. Chengu.

Baragram union board.

Munshi Abdur Rahman Mandal.
Munshi Rasat Ullah Faquir.
Munshi Saad Unnin Khan.

Kumargata union board.

Munshi Omar Ali Sarkar.
Munshi Md. Tafiruddin.
Babu Jogendra Chandra De.

Mankun union board.
Munshi Rajab Ali Sarkar.
Munshi Mir Najibuddin.
Babu Peari Mohan Choudhury.

Ghoga union board.

Munshi Nayeb Ali Sarkar.
Munshi Md. Ibrahim.
Babu Abhoy Charan De.

Daogaon union board.

Munshi Meher Ali.
Babu Ganesh Chandra Das.
Babu Mahesh Chandra Sutradhar.

Kashimpur union board.

Munshi Jubed Ali.
Munshi Janab Ali.
Babu Durga Charan Dhar, B.L.

Kheruajani union board.

Munshi Dukhi Mamud Sarkar.
Munshi Kalim Uddin Sarkar.
Munshi Abul Fate Ali Asraf Khan.

Fulbaria police-station.

Puthijana union board.

Munshi Maju Bepari.
Munshi Najir Sarkar.
Munshi Lal Mamud Sarkar.

Kushmail union board.

Munshi Abdul Hakim.
Munshi Yakub Ali.
Babu Jatindra Chandra Bhattacharyya.

Balian union board.

Munshi Atash Ali Mir.
Munshi Manir Uddin Sarkar.
Munshi Md. Ibrahim Master.

Fulbaria union board.

Munshi Abdul Rahman Sarkar.
Munshi Faizuddin.
Munshi Ahmmad Hossain Sarkar.

Radhakanai union board.

Munshi Rahmat Ali Sarkar.
Babu Mahim Chandra Debnath.
Babu Gaya Nath Sarkar.

Gaffargaon police-station.

Rasulpur union board.

Munshi Abdul Jabbar Mian.
Maulvi Md. Abdul Hakim.
Babu Satish Chandra Chakladar.

Char Algi union board.

Maulvi Amiruddin Ahmed.
Maulvi Md. Mahabbatullah.
Babu Jagat Chandra Mallabarman.

Neguari union board.

Babu Nagendra Chandra Roy, B.A.
Babu Krisna Chandra Tilakdas.
Munshi Md. Hashmat Dhali.

Trisal police-station.

Dhanikhola union board.

Maulvi Md. Osman Ali.
Maulvi Md. Ismail.
Babu Sarbananda Das Gupta.

Bailar union board.

Munshi Md. Arfan Ali Sarkar.
Hazi Muhamad Hasmatullah Kazi.
Babu Birendra Nath Roy.

Kathal union board.

Babu Rajani Kanta Sarma.
Babu Rash Behari Sarkar.
Munshi Md. Abdul Latif.

Kanihari union board.

Babu Profulla Kumar Chakravarty.
Munshi Abdul Majid Mandal.
Munshi Faizur Rahaman.

Rampur union board.

Maulvi Md. Yakub Ali.
Maulvi Md. Arfan Ali Kari.
Babu Mahesh Chandra Sarkar.

Shakhua union board.

Maulvi Taheruddin Shah.
Maulvi Abdus Sobhan Biswas.
Babu Panchananda Sarkar.

Balipara union board.

Munshi Md. Abdul Gani.
Munshi Rahmatullah.
Babu Abinash Chandra Bhoumik.

Trisal union board.

Munshi Md. Hossain Ali.
Babu Joy Chandra Gope.
Babu Hem Chandra Gope.

K. G. MORSHED, *District Magistrate.*

Presidency Division—Calcutta.

No. 2064R.G.—28th August 1936. — This office notification No. 1959R.G., dated the 15th August 1936, posting Babu Birendra Nath Maitra, Sub-Deputy Collector, on leave, temporarily to Sadar, Nadia, is cancelled.

No. 2087R.G.—31st August 1936.—Maulvi M. Ibrahim Hossain, Sub-Deputy Collector and Circle Officer, Bagerhat, Khulna, is transferred to Jangipur, Murshidabad, as Circle Officer.

No. 2081 R. G.—31st August 1936.—Babu Mahendra Nath Chaudhuri, Sub-Deputy Collector, on leave, is posted to Bagerhat, Khulna, as Circle Officer.

No. 2105R.G.—1st September 1936.—This office notification No. 2022 R. G., dated the 25th August 1936, transferring Babu Birendra Kishore Kar, Sub-Deputy Collector, Narail, Jessore, to Chuadanga, Nadia, as Circle Officer, is cancelled.

No. 1758M.—2nd September 1936.—In exercise of the powers conferred by section 50 of the Bengal Municipal Act, 1932 (Bengal Act XV of 1932), it is hereby notified for general information that Babu Bibhuti Kumer Mukherjee has been duly elected Chairman of the Panihati Municipality in the district of the 24-Parganas in the place of Babu Sat Cori Mitter, removed.

No. 2255L.S.-G.—2nd September 1936.—It is hereby notified for general information that, under rule 23 of the dispensary manual, Babu Phanindra Nath Singh has been appointed to be a member of the municipal charitable dispensary at Basirhat in the district of the 24-Parganas in place of Babu Manindra Nath Bhanja, resigned.

No. 2123R.G.—4th September 1936.—Babu Ajit Kumar Sen, Sub-Deputy Collector and Circle Officer, Jangipur, Murshidabad, is transferred to Sadar, 24-Parganas.

A. J. Dash, *Commissioner.*

Nadia, the 31st August, 1936.

Errata.—In the notification, dated the 4th August 1936, under sub-section (2) of section 6 of the Bengal Village Self-Government Act, 1919 (Bengal Act V of 1919), published at pages 1941 to 1948 of the *Calcutta Gazette*, dated the 13th August 1936, the following corrections are made:—

Kumarkhali police-station.

(*a*) Shelidah union board.

Ward No. 1.

Read "Babu Ajit Nath Nandi" *for* the 1st name "Babu Ajir Nath Nandi".

Daulatpur police-station.

(*a*) No. 9—*Read* "Adabaria union board" *for* "Abadaria union board".

Errata.—In the notification, dated the 4th August 1936, under sub-section (3) of section 6 of the Bengal Village Self-Government Act, 1919 (Bengal Act V of 1919), published at pages 1941 to 1948 of the *Calcutta Gazette*, dated the 13th August 1936, the following corrections are made:—

Kushtia police-staion.

(*a*) Jeorakhi union board.

Read "Munshi Abdul Aziz Molla" *for* the 1st name "Munshi Abdul Aziz Molia".

(*b*) Patikabari union board.

Read "Babu Benawari Lal Biswas" *for* the 3rd name "Babu Benawari Lall Bisyas".

(*c*) Jhaudia union board.

Read "Munshi Toakkel Biswas" *for* the 1st name "Munshi Joakkel Biswas".

Daulatpur police-station.

(*a*) Hogolbaria union board.

Read "Babu Monindra Nath Biswas" *for* the 1st name "Babu Moni Mohan Biswas".

A. S. Ray, *District Magistrate.*

Rajshahi Division—Jalpaiguri.

No. 1101M.—28th August 1936.—In modification of notification No. 10096L.R., dated the 14th July 1936, issued by Government in the Revenue Department and published at page 1822, Part I of the *Calcutta Gazette*, dated the 30th July 1936, I, in exercise of the powers delegated to me under sub-section (2) of section 3 of the Bengal Agricultural Debtors Act, 1935 (Bengal Act VII of 1936), appoint Maulvi Samiruddin Sarker as a member and Chairman of the Nasarathpur Debt Settlement Board in the district of Dinajpur.

No. 3481J.—29th August 1936.—Maulvi Muhammad Mohsin, Sub-Deputy Collector, Serajganj, Pabna, is appointed Circle Officer, Serajganj Circle, *vice* Babu Khagendra Nath Mitra, transferred.

L. R. Fawcus, *Commissioner (offg.).*

Jalpaiguri, the 3rd September 1936.

No. 8224G.—It is hereby notified for general information that, under section 13 of the Bengal Village Self-Government Act, 1919 (Bengal Act V of 1919), Munshi Enaruddin has been duly elected to be a member of the Dhupguri union board in police-station Dhupguri in the Sadar subdivision of the district of Jalpaiguri, *vice* Babu Guneswar Roy, deceased.

R. H. HUTCHINGS, *Deputy Commissioner.*

Rangpur, the 25th August 1936.

No. 5576J.—It is hereby notified for general information that, under section 13 of the Bengal Village Self-Government Act, 1919 (Bengal Act V of 1919), read with rule 35 of the rules for the election and appointment of members of union boards, Babu Surendra Nath Das Gupta, Itakumari village, post office Itakumari, district Rangpur, has been duly appointed to be a member of the Itakumari union board within the jurisdiction of the Pirgacha police-station in the Sadar subdivision of the Rangpur district, *vice* Babu Mukunda Prosad Singh Kaviraj, deceased.

Rangpur, the 31st August 1936.

No. 5706J.—It is hereby notified for general information that, under section 13 of the Bengal Village Self-Government Act, 1919 (Bengal Act V of 1919), read with rule 35 of the rules for election and appointment of members of union boards, Babu Birendra Nath Bakshi and Babu Sachindra Nath Chakrabarty have been duly elected to be members of the Kurigram union board in the Kurigram subdivision of the Rangpur district, in places of Babu Satish Chandra Bakshi, deceased and Babu Jitendra Nath Bose, removed.

Rangpur, the 4th September 1936.

No. 5820J.—It is hereby notified for general information that, under section 13 of the Bengal Village Self-Government Act, 1919 (Bengal Act V of 1919), read with rule 35 of the rules for the appointment and election of members of union boards, Munshi Kina Mahammad Paikar of Budhukamala, post office Gajaghanta, district Rangpur, has been duly elected to be a member of the Tapadhan union board, police-station Kotwali, in the Sadar subdivision of the Rangpur district, *vice* Munshi Serajuddin Saha, deceased.

No. 5824J.—Under rule 3 of the Rules for Managing Committees of Government High Schools, it is notified that in the Managing Committee of the Rangpur Zilla School, published with notification No. 5745J., dated the 18th October 1934, Babu Hem Lal Raha, B.A., B.T., Assistant Teacher of the School, has been elected as the Teachers Representative, *vice* Maulvi Tufazzal Hossain, transferred.

S. K. GHOSH, *District Magistrate.*

Pabna, the 4th September 1936.

Under rule 32A of the election rules under the Local Self-Government Act, it is hereby notified that the elections to the Sadar local board, Pabna, will be held for the different thanas on the dates specified against each, as shown below:—

Pabna-Cum-Atgharia thana—9th and 11th November 1936.

Faridpur thana—9th and 10th November 1936.

Sara thana—9th, 10th and 11th November 1936.

Chatmohar thana—9th and 10th November 1936.

Bera thana—9th, 10th, 11th and 12th November 1936.

Santhia thana—9th and 10th November 1936.

Sujanagar thana—9th, 10th and 11th November 1936.

MD. MAHMUD, *District Magistrate.*

Rajshahi, the 4th September 1936.

No. 7666J.—It is hereby notified for general information that, under section 13 of the Bengal Village Self-Government Act, 1919 (Bengal Act V of 1919), read with rule 36 of the rules for the election and appointment of members of union boards, Maulvi Kader Baksha has been duly appointed to be a member of Shahagola union board within Atrai police-station in Noagaon subdivision of Rajshahi district, *vice* Maulvi Sheikh Abul Kasem, resigned.

M. MOITRA, *District Magistrate (offg.).*

Registered No. C207

The Calcutta Gazette

THURSDAY, SEPTEMBER 10, 1936.

PART IA

Orders and Notifications by the Government of India republished for general information.

DEPARTMENT OF INDUSTRIES AND LABOUR.

NOTIFICATIONS.

Simla, the 20th August 1936.

No. M.-826.—The following draft of rules which it is proposed to make in exercise of the powers conferred by sections 4, 5 (2), 14 (2), 21, 22 and 29 (1) of the Petroleum Act, 1934 (XXX of 1934), read with section 22 of the General Clauses Act, 1897 (X of 1897), is published as required by sub-section (2) of section 29 of the first-mentioned Act, for the information of all persons likely to be affected thereby and notice is hereby given that the said draft will be taken into consideration on or after the 23rd November 1936. Any objection or suggestion which may be received from any person in respect of the draft before the date specified will be considered by the Governor General in Council.

Draft Rules.

PRELIMINARY.

1. *Short title.* These rules may be called the Petroleum Rules, 193 .

2. *Supersession and savings.*—All notifications and rules issued by the local Governments and all appointments made by them under section 5 of the Indian Petroleum Act, 1899 (VIII of 1899), and all rules made by the Governor General in Council under section 8 of that Act are hereby superseded, but all licences or duplicates granted or renewed, all fees imposed or levied and all powers conferred by or under any notification or rule so superseded, shall, so far as they are consistent with these rules, be deemed to have been respectively granted, renewed, imposed, levied or conferred under these rules.

3. *Definitions.* In these rules, unless there is anything repugnant in the subject or context,—

(*a*) "The Act" means the Petroleum Act, 1934.

(*b*) "Chief Inspector" means the Chief Inspector of Explosives in India.

(*c*) "District Authority" means —

(*i*) In a Presidency-town, or its suburbs, or in Rangoon, the Commissioner of Police;

(*ii*) in the Yenangyaung and Singu oilfields, the Warden, Yenangyaung; and

(*iii*) elsewhere, the District Magistrate.

(*d*) "District Magistrate" includes an "Additional District Magistrate".

(*e*) "Heavy petroleum" means petroleum which has its flashing-point not below 150° F.

(*f*) "Inspector" means an Inspector of Explosives.

(*g*) "Installation" means any premises within which any place has been specially prepared for the storage of petroleum in bulk.

(*h*) "Petroleum in bulk" means petroleum contained in a receptacle exceeding two hundred gallons in capacity.

(*i*) "Port officer" includes any person acting under a constituted Port Authority in charge of port discipline.

(*j*) "Protected works" includes buildings in which persons dwell or assemble, public roads, docks, wharves, timber yards, other petroleum stores and any other place not forming part of an installation, which the Chief Inspector has by written order declared to be a protected work.

(*k*) "Sampling officer" means an officer authorised by the Governor General in Council under section 14 of the Act.

(*l*) "Storage shed" means a building used for the storage of petroleum otherwise than in bulk, whether it forms or does not form part of an installation, but does not include a building used for the storage of petroleum exempt from licence under sections 7, 8 and 9 of the Act.

(*m*) "Testing officer" means an officer authorised by the Governor General in Council to test petroleum under section 17 of the Act.

4. *Excluded petroleum.*—Nothing in these rules, except Chapter VIII, applies to petroleum which has its flashing-point not below 200° F.

CHAPTER I.

Importation of Petroleum.

PART I.—GENERAL.

5. *Licence for import of dangerous petroleum.*—Save as provided in sections 8, 9 and 10 of the Act dangerous petroleum shall not be imported except under a licence granted under these rules.

6. *Petroleum exempted.*—(1) Nothing in this Chapter applies to—

(*a*) dangerous petroleum, not exceeding 6 gallons in quantity, which is not intended for sale;

(*b*) dangerous petroleum contained in any fuel tank incorporated in a motor conveyance;

(*c*) non-dangerous petroleum, comprised in a ship's stores and manifested as such, provided it is not of an unreasonably large amount.

(2) If any question arises as to whether any petroleum manifested as ship's stores is of an unreasonably large amount, the decision thereon of the Collector of Customs shall be final.

PART II.—IMPORTATION BY SEA.

7. *Importation by sea.*—Petroleum shall not be imported by sea except into the ports of—

Aden.	Hangarkatta.
Akyab.	Karachi.
Bassein.	Madras.
Bombay.	Malpe.
Calcutta.	Mangalore.
Calicut.	Moulmein.
Chittagong.	Rangoon.
Cocanada.	Tellicherry.
Cochin.	Tuticorin.
Coondapur.	Vizagapatam.

8. *Declaration by master of ship carrying petroleum or by the ship's agent.*—The master of every ship carrying petroleum shall deliver to the pilot, before entering any of the ports mentioned in rule 7, a written declaration in Form A under his signature:

Provided that if, in anticipation of a ship's arrival, the agent for such ship delivers to the Port Officer a written declaration as aforesaid under his signature, no such declaration need be made by the master of the ship.

9. *Delivery of certificate.*—If the master or agent declares that any petroleum which it is intended to land at that port or at any other port in British India is petroleum certified in accordance with rule 11 he shall deliver to the pilot or Port Officer, as the case may be, along with his declaration, the certificate relating to such petroleum.

10. *Declaration and Certificate to be forwarded to Collector of Customs.*—Every declaration and certificate delivered to a pilot under rules 8 and 9 shall be made over by him without delay to the Port Officer, and all such declarations and certificates received by the Port Officer shall be forwarded by him, with all convenient despatch, to the Collector of Customs of the port.

11. *Certified petroleum.*—For the purposes of rules 9 and 155 and Form A "petroleum" shall be deemed to be certified if it is accompanied by a certificate in Form B granted at the port of shipment or, subject to the approval of the Collector of Customs, in any other form containing the material particulars required by Form B and has a flashing-point not below 76°F.:

Provided that the Collector of Customs may refuse to accept any certificate, if he is not satisfied as to its genuineness.

12. *Anchorage of ships carrying petroleum.*—Every ship having petroleum on board shall be anchored at such anchorage as the Conservator of the Port shall appoint in this behalf and shall not leave such anchorage without the general or special order of the Conservator of the Port and subject to such conditions as may be specified in such order. Such anchorage shall in no case be the same as that for vessels laden with explosives and shall be sufficiently far removed from the anchorage for vessels laden with explosives to prevent the possibility of a fire originating at the former place affecting vessels anchored at the latter.

13. *Production of certificate and licence for import.*—(1) Every person desiring to import petroleum shall furnish personally or through his agent to the Collector of Customs a certificate of storage accommo-dation in Form C signed by the said person or his agent:

Provided that where the importer intends to import both dangerous and non-dangerous petroleum, separate Forms shall be furnished for dangerous and non-dangerous petroleum:

Provided further that this sub-rule shall not apply where the quantity of non-dangerous petroleum to be imported by any one consignee does not exceed 500 gallons, or where the quantity of dangerous petroleum to be so imported does not exceed 60 gallons.

(2) Every person desiring to import dangerous petroleum shall produce, personally or through his agent, before the Collector of Customs his licence for the import and storage of such petroleum.

14. *Permission of Collector of Customs to land petroleum.*—(1) No petroleum shall be landed except with the permission of the Collector of Customs.

(2) If the Collector of Customs, after receiving the testing officer's report on any petroleum, the certificate required by rule 13 (1) and, if necessary, the licence referred to in rule 13(2), and after making such further inquiries as he deems necessary, is satisfied that the petroleum can lawfully be imported and that there is suitable accommodation for it, he shall permit it to be imported.

(3) Nothing in this rule shall affect the power of the Collector of Customs to detain the petroleum under any other law or rule for the time being in force.

15. *Landing of non-dangerous petroleum in anticipation of the testing officer's report.*—(1) Notwithstanding anything contained in rule 14, if the consignee furnishes a guarantee to re-ship the petroleum if the testing officer's report proves unfavourable, the Collector of Customs may, in anticipation of the testing officer's report, permit any petroleum which he believes to be non-dangerous to be discharged into boats or to be landed.

(2) The permission granted under sub-rule (1) shall be subject to the condition that the boats into which the petroleum is discharged, shall remain at such place as the Collector of Customs may appoint or that the petroleum shall be landed at a landing-place duly appointed for this purpose by him and stored in an installation licensed under these rules.

16. *Unloading of petroleum in bulk.*—Subject to the rules in Part II of Chapter II, petroleum imported in bulk shall be discharged into storage tanks on shore either directly or by means of barges or lighters specially constructed for carrying petroleum in bulk.

17. *Unloading of petroleum otherwise than in bulk.*—(1) Subject to the rules in Part II of Chapter II, petroleum imported otherwise than in bulk shall be landed either at jetties provided for the purpose, or in barges or lighters and only at such places as the Conservator of the Port shall direct.

(2) No petroleum contained in casks, drums or other receptacles shall be landed unless such receptacles are free from leakage and of such strength and construction as not to be liable to be broken or to leak, except in case of gross carelessness or extraordinary accident.

18. *Transhipment of petroleum.*- Petroleum may be transhipped from one ship to another for conveyance to any other port, whether within or beyond the limits of British India, subject to the rules in Part II of Chapter II.

19. *Heavy petroleum.*—(1) Nothing in rules 12 to 18 inclusive applies to heavy petroleum.

(2) Notwithstanding anything contained in the preceeding rules, if the master of, or agent for, a ship produces a certificate that any petroleum on board is heavy petroleum, the Collector of Customs shall allow it to be discharged in the same manner as ordinary cargo: provided that the sampling officer may at any time require a sample of any portion of it to be delivered to him, with a view to having it tested.

PART III.—IMPORTATION BY LAND.

20. *Importation by land.*—Petroleum shall not be imported by land save in accordance with rules 21, 22 and 23.

21. *Importation through Castle Rock.*—Non-dangerous petroleum may be imported by land from Marmugao through Castle Rock, provided that the Customs authority is satisfied that the petroleum has been subjected to any necessary test at Marmugao.

22. (1) *Re-importation at the Viramgam Custom Line.*- Petroleum which has already been imported at Bombay or Karachi and has been officially tested there, or petroleum of Indian origin which has been officially tested at a refinery and has been exported to Kathiawar by sea from any Customs port may be re-imported at the Viramgam custom line, provided that the conditions in sub-rules (2), (3) and (4) of this rule are satisfied.

(2) If the consignment covered by a shipping bill from a customs port is brought as a whole, the shipping bill shall be presented with the consignment and the import application at the land customs station. If the consignment is despatched in parts, the shipping bill shall accompany the first part of the consignment. Subsequent portions of the consignment shall be covered by a certificate from the customs officer of the port of landing in Kathiawar, declaring that "the petroleum forms part of the consignment covered by shipping bill No..... dated .....forwarded on the..... ..... with the first portion of the consignment"

(3) No petroleum shall be re-imported after the expiry of two months from the date of the shipping bill covering it.

(4) The marks on the cases of petroleum shall be clearly and fully described in the shipping bill.

(5) The Collector of Salt Revenue, Bombay, may waive the strict enforcement of sub-rules (2) and (3) in case of emergency, if he is satisfied that the petroleum sought to be reimported was originally exported from a customs port to Kathiawar.

23. *Importation from Karikal.*—(1) Non-dangerous petroleum may be imported from Karikal with the written permission of the Chief Inspector and subject to such conditions as he may impose.

(2) No such permission shall be granted to any applicant who was not importing petroleum *via* Karikal prior to 1st January 1935.

CHAPTER II.

Transport of Petroleum.

PART I.—GENERAL.

24. *Prevention of accidents.*—All due precautions shall be taken at all times to prevent accident by fire or explosion.

25. *Prevention of escape of petroleum.*—All due precautions shall be taken at all times to prevent any escape of petroleum during transport especially into any drain, sewer, harbour, river or water course.

26. *Empty receptacles.*—All empty tanks or other receptacles which have contained dangerous petroleum or which have contained non-dangerous petroleum in bulk shall be kept securely closed unless they have been thoroughly cleaned and freed from petroleum and petroleum vapour.

27. *Receptacles for dangerous petroleum.*—(1) Dangerous petroleum, if not in bulk, shall be contained in gas-tight tinned, galvanised or otherwise rust-proofed sheet iron or steel receptacles of not more than 65 gallons capacity. Such receptacles shall be fitted with well-made filling apertures and well-fitting screw plugs, or with screw caps or other caps with metal air-tight under-caps.

(2) The receptacles shall be of a type approved in writing by the Chief Inspector and shall have the following thickness of metal:—

	Not less than—
Capacity not exceeding 2 gallons ..	.. 27 B. G.
Exceeding 2 but not exceeding 4 gallons ..	.. 22 B. G.
Exceeding 4 but not exceeding 30 gallons ..	.. 18 B. G.
Exceeding 30 but not exceeding 45 gallons	.. 17 B. G.
Exceeding 45 gallons	.. 16 B. G.

(3) Where the approval of the Chief Inspector is sought to a type of receptacle not previously approved, three or, if required by him, more copies of a detailed drawing thereof to scale shall be forwarded to him.

(4) The receptacles shall be kept in proper repair and shall be available for inspection at any time by the Chief Inspector or an Inspector.

(5) The receptacles shall be so constructed and secured as not to be liable, except under circumstances of gross negligence or extraordinary accident, to be broken or become defective, leaky or insecure in transit.

(6) The receptacles shall bear a stamped, embossed, painted or printed warning exhibiting in conspicuous characters the words "Petrol" or "Motor Spirit" or an equivalent warning of the dangerous nature of the petroleum.

(7) An air-space of not less than one-twentieth of its capacity shall be left in each tank, drum or other receptacle containing dangerous petroleum.

28. *Receptacles for non-dangerous petroleum.*—Non-dangerous petroleum, if not in bulk, shall be packed in air-tight tins or drums of steel or iron or other receptacles not easily broken or in tank-carts of a pattern approved by the Chief Inspector:

Provided that in the case of an unberthed passenger ship to which Part IV of the Indian Merchant Shipping Act, 1923 (XXI of 1923), applies, the petroleum shall be packed either in tins enclosed in outer wooden cases or in hermetically sealed iron or steel drums, or, if it is heavy petroleum in sound well-coopered wooden casks of not more than 50 gallons capacity.

29. *Restriction on delivery and despatch of petroleum.* (1) No person shall deliver any petroleum to any one other than the holder of a storage licence or his authorized agent or a railway administration.

(2) No person shall despatch any petroleum to any one other than the holder of a storage licence:

Provided that this rule shall not apply to the delivery or despatch to any person of petroleum in quantities which are permitted by the Act or these rules to be stored without licence.

PART II.—TRANSPORT BY WATER.

30. *Conditions of carriage of petroleum in bulk by water.*—Petroleum in bulk shall not be carried by water except in a ship, barge or other vessel certified as suitable for the carriage of petroleum in bulk by an officer appointed by the Governor General in Council in this behalf, and the petroleum shall be stored in such part of the ship, barge or other vessel and in such manner as may be approved by general or special order, by the officer so appointed after consultation with the Chief Inspector:

Provided that—

(*a*) nothing in this rule shall apply to ships importing petroleum;

(*b*) petroleum in tank-wagons may, with the permission in writing of the Chief Inspector and subject to such conditions as he may specify, be transported across a river by a recognised wagon ferry.

31. *Requirements as to construction of vessels.* Every ship, barge or other vessel carrying petroleum in bulk other than a recognised wagon ferry permitted to transport tank wagons under proviso (*b*) to rule 30 must be of steel or iron well and substantially constructed with scantlings of ample dimensions in proportion to the size of the vessel.

32. *Tank fittings on vessels.*—In petroleum tank ships, barges or other vessels used for the transport of petroleum other than heavy petroleum the following provisions shall apply:—

(*a*) All tanks shall be fitted with independent approved filling and suction pipes and valves or with stand-pipes with blank flanges, all pipes being carried down nearly to the bottom of the tanks, and no petroleum in bulk shall be taken on board or discharged except through such pipes and valves, unless otherwise permitted by the Chief Inspector in writing.

(*b*) All tanks shall be fitted with manholes having screwdown covers with petroleum-tight joints and, in the case of tanks intended for use with dangerous petroleum, with ventilators or relief valves of approved pattern properly protected with wire gauze of a mesh of not less than 28 to the linear inch.

(*c*) Ventilators similarly protected shall be fitted to all spaces around tanks, and to the cargo space in self-propelled barges.

33. *Self-propelled barges.*—(1) The whole of the machinery of every self-propelled barge shall be at the stern of the barge and shall be entirely separated from the cargo by a cofferdam consisting of two transverse petroleum-proof bulkheads separated by a space of at least two feet six inches.

(2) Self-propelled barges shall be provided with a heavy wood belting.

34. *Petroleum in bulk on barges or flats.*—(1) Petroleum in bulk shall not be transported in barges or flats—

(*a*) which are self-propelled unless each carries at least four fire extinguishers,

(*b*) which are in tow of or otherwise attended by a steamer or tug unless the steamer or tug carries at least four fire extinguishers.

(2) The fire extinguishers referred to in sub-rule (1) shall be of a pattern approved by the officer appointed under rule 30 and shall be fitted in positions approved by him.

35. *Inflammable cargo, or passengers.*—(1) No ship, barge or other vessel shall carry petroleum in bulk if it is carrying passengers, or any inflammable cargo other than petroleum or coal.

(2) This rule shall not apply to heavy petroleum used as fuel and carried in cellular double bottoms under engine and boiler compartments and under ordinary holds, and in peak tanks, deep tanks or bunkers of approved construction; such oil fuel storage tanks and installations connected therewith shall comply with the conditions described in the instructions to Surveyors contained in the Board of Trade Circular No. 1624 (Oil Fuel Installation in Passenger Steamship), dated November 1920.

36. *Restrictions as to inflammable cargo.*—(1) No steamer or tug employed in towing or otherwise attending a barge, flat or lighter carrying petroleum in bulk shall at the same time tow or otherwise attend any other barge or vessel carrying an inflammable cargo other than petroleum or coal.

(2) No such steamer or tug shall carry any inflammable cargo other than petroleum or coal.

(3) This rule shall not apply to heavy petroleum carried in bulk.

37. *Ventilation and cleaning of holds and tanks.*—(1) Before any petroleum (other than heavy petroleum contained in barrels, drums or other receptacles) is discharged from a ship, barge or other vessel the holds of such vessel shall be thoroughly ventilated.

(2) After all petroleum has been removed from any such vessel the holds, tanks and bilges of the vessel shall be rendered free from inflammable vapour.

(3) Sub-rule (2) shall not apply to the tanks of a petroleum ship importing petroleum which leaves the port without delay after the discharge of cargo or remains only for the purpose of taking on board bunkers stores or ballast or for such other purposes as may be approved by the Port Office: provided that tanks of every such ship are securely fastened down immediately after the discharge of the cargo.

(4) In the case of barges or lighters continuously engaged in the transport of petroleum in bulk (for example from one installation to another) sub-rule (2) shall not apply, provided that unless an interval of at least 72 hours is likely to elapse between an operation of unloading or discharging and the next loading operation, the tanks are securely fastened down immediately after unloading.

(5) In the case of specially constructed steel tank motor vessels approved by the Chief Inspector which are engaged in transport of petroleum in bulk on such rivers and on such parts thereof (outside the Port limits) as may be approved by him, sub-rule (2) shall not apply, provided that the tanks of such vessels are securely fastened down immediately after unloading and the vessel departs not later than 12 hours after completion of discharge for her approved berth near the point of loading.

(6) All ships, barges or other vessels which by virtue of sub-rules (3), (4) and (5) are exempted from the necessity of compliance with sub-rule (2) shall, until their holds and tanks have been rendered free from inflammable vapour, comply with all the rules applicable to ships, barges or other vessels when carrying petroleum in bulk.

38. *Naked lights, fire and smoking prohibited.*—Save as provided in rule 33 no fire, naked light, fusees, matches, or other appliance for producing ignition or explosion and no smoking shall be allowed on board any barge, flat or lighter carrying petroleum in bulk, or on board any such vessel used for the transport of dangerous petroleum otherwise than in bulk or for the transhipment of petroleum to or from any vessel within the limits of any port.

39. *Master of vessel specially responsible.*—The Master or other officer in charge of any petroleum ship or of any vessel certified under rule 30 shall be responsible that—

(*a*) all due precautions are taken for the prevention of accident in the loading or discharge of petroleum;

(*b*) so long as there is petroleum or inflammable vapour in a tank, all openings from the tank to the atmosphere, except the gas escape line, are kept closed and locked or otherwise fastened in a manner certified as satisfactory by the officer appointed under rule 30: and that when it is necessary to take dips or samples, the ullage plugs or sighting ports are closed immediately this has been done:

Provided that, subject to the provisions of clause (*c*), he may cause the necessary openings to be opened or unlocked for the purpose of taking on board or discharging non-dangerous petroleum, for cleaning the tanks, or for other sufficient reason;

(*c*) every person entering a tank shall wear a safety helmet of a description approved by the Chief Inspector, unless a Port Officer or other officer appointed by the Governor General in Council in this behalf has examined the tank with the aid of a vapour-testing instrument and has certified it to be free from dangerous vapour;

(*d*) a conspicuous red flag having the words "Petroleum Boat" marked on it in black letters is exhibited, from sunrise to sunset, upon the vessel where it can be best seen and upon any steamer or tug towing or otherwise attending on such vessel;

(*e*) the vessel, when carrying petroleum in bulk, at all times lies afloat unless otherwise permitted by general or special order in writing of the Chief Inspector or the Port Officer;

(*f*) the vessel, when carrying petroleum in bulk, is constantly under the control and personal supervision of a responsible person;

(*g*) iron or steel hammers or other instruments capable of causing a spark are not used for the purpose of opening or closing the hatches or tank covers;

(*h*) footwear which exposes any iron or steel is not worn on the deck of any vessel while the loading or unloading of dangerous petroleum is proceeding.

40. *Loading and unloading by night.*—(1) Where approved electric lighting is installed and rule 103 is complied with, tank ships and barges shall be allowed to discharge or load non-dangerous petroleum at any time and tank ships and barges which shall have commenced the discharge into storage tanks on shore or loading into their own tanks of dangerous petroleum in bulk before sunset shall be permitted to continue the said discharge or loading.

(2) Should anything occur during discharging or loading dangerous petroleum after sunset which necessitates a repair or disconnection of the plant pipes or connections, such discharging or loading shall be discontinued until after sunrise.

(3) Save as provided by sub-rule (1) petroleum shall not be discharged or loaded or landed between the hours of sunset and sunrise.

41. *Loading and discharge of bulk petroleum.*—(1) The loading and discharge of bulk petroleum shall be by armoured hose and metal pipes.

(2) All pipes and other appliances used in the landing or loading of petroleum in bulk shall be free from leakage.

(3) When a ship has finished discharging petroleum other than heavy petroleum, the pipe line shall be immediately emptied of petroleum by pumping water through the line.

(4) The Chief Inspector may, by written order, grant exemptions in any particular case from the provisions of sub-rules (1) and (3).

42. *Precautions on suspension of loading or discharge.*—When the loading or landing of petroleum has been commenced such loading or landing shall proceed with with due diligence, and, if it is discontinued, the tanks and holds of the ships, barges or other vessels concerned and all loading or discharge valves shall be closed immediately.

43. *Smoking, fire and lights prohibited during loading and unloading.*—At all times during the loading or unloading of a petroleum ship, barge or other vessel until such time as all petroleum shall have been loaded into or removed from the holds or tanks and the holds or tanks shall have been securely closed down and, in the case of landing, rendered free from inflammable vapour, there shall be no fire or artificial light or smoking on board such ship or other vessel or within 100 feet of the place where the petroleum is being loaded or landed:

Provided that nothing in this rule shall prevent the use of lamps, cookers or other similar type of safe apparatus electric or otherwise, so designed, constructed and maintained as to be incapable of igniting inflammable vapour or, in the case of heavy petroleum, the use of galley fires:

Provided further that this rule shall not prohibit the discharging or loading of a petroleum ship, under conditions approved by the Port Authorities, by means of steam from her own boilers or power generated by electric motors or internal combustion engines placed in a position away from cargo holds and pumprooms or alternatively by means of electric motors so designed, constructed and maintained as to be incapable of igniting inflammable vapour and maintained in accordance with Lloyds or any other approved classification society's requirements.

44. *Matches.*—No person engaged in landing or loading petroleum shall carry fusees, matches, or any other appliance for producing ignition or explosion.

45. *Fire-extinguishing appliances to be ready for use.*—Vessel discharging or loading petroleum shall have adequate fire-extinguishing appliances so disposed that they can be put into immediate use, and, if the petroleum is dangerous petroleum, shall have their awnings furled.

46. *Restriction on the conveyance of petroleum.*—Dangerous and non-dagerous petroleum shall not be simultaneously conveyed to the shore or to another ship on the same barge or other vessel.

47. *Restriction as to leaky tins.*—Leaky tins containing petroleum shall not be discharged into a barge or other vessel containing sound tins.

48. *Transport by sea of petroleum which has not been tested.*—Petroleum which has been brought into any port specified in rule 7 and which has not been tested at the port of import in accordance with the rules contained in Chapter VIII, shall not be transported to any other port save one at which importation is permitted under rule 7 and the provisions of all the rules in Chapter I, except rule 5, shall be deemed to apply to such petroleum when it arrives at such other port.

49. *Transport by sea of petroleum which has been tested.*—Petroleum which has been tested at the port of import may be transported to any other port and the provisions of rules 8—14 and 16-17, shall apply to such petroleum when it arrives at such other port.

PART III.—TRANSPORT OF DANGEROUS PETROLEUM OTHERWISE THAN IN BULK BY COUNTRY CRAFT AND COASTING STEAMERS.

50. *Rules applicable.*—Unless expressly provided otherwise in this Part nothing contained in Part II of this Chapter shall be applicable to any petroleum transported in accordance with the rules contained in this Part.

51. *Maximum quantity allowed to be carried.*—Dangerous petroleum may be transported otherwise than in bulk by country craft or steam or motor vessels other than an unberthed passenger ship as defined in the Indian Merchant Shipping Act, 1923 (XXI of 1923), subject to the provisions of rules 52 to 61 inclusive, provided the quantity of petroleum does not exceed :—

(*a*) in the case of country craft, the licensed carrying capacity of the vessel after taking into account the weight of the barrels or tins in which the petroleum is carried; and

(*b*) in the case of steam or motor vessels, 15 tons.

52. *Permit to be obtained.*—The master of every vessel shall, before commencing to load, obtain from the Port Officer a permit stating the licensed carrying capacity of the vessel and certifying that all necessary precautions have been taken for ensuring the safety of the crew, and that all regulations regarding the vessel's navigation lights, life-saving apparatus, etc., have been complied with.

53. *Fee for survey.*—An annual fee of Rs. 16 shall be payable for each craft surveyed for the purpose of carrying dangerous petroleum coastwise and in the event of any subsequent inspections being necessary owing to a deficiency in the requirements, the annual fee shall be enhanced to Rs. 32.

54. *Loading.*—(1) Loading shall be done under the supervision of an official appointed by the Collector of Customs.

(2) The master of the vessel or the shipper of the consignment shall give due notice to the Collector of Customs of the date and time when the services of such an official will be required and shall also forward with the notice a fee at the rate of Rs. 10 per day and a conveyance charge of annas six per mile.

(3) Petroleum shall not be loaded between the hours of sunset and sunrise except subject to the conditions laid down in rule 40.

55. *Loading of barrels and drums.*—Barrels and drums shall be loaded with the bungs upwards.

56. *Conditions of transport by country craft.*—No dangerous petroleum shall be transported in country craft except subject to the following conditions :—

(*a*) Subject to the provisions of rule 27, the petroleum shall be carried either,—

(*i*) in 40/65 gallon steel barrels the screw bungs of such barrels being well-fitting and sealed, or

(*ii*) in 4 gallon sealed steel drums, not more than three tiers of which may be carried on any single vessel, or

(*iii*) in the usual 2 gallon sealed steel tins of petrol companies, not more than six tiers of which may be carried on any single vessel.

(*b*) All barrels or tins shall be carefully examined and no leaky barrels or tins shall be taken on board the craft.

(*c*) The barrels, drums or tins shall not be placed within four feet of the after-deck.

57. *Carriage below decks.*—(1) Dangerous petroleum may be carried below decks in decked vessels provided that the hold is properly ventilated, and that the condition in sub-rule (2) is complied with.

(2) In all vessels a solid gas-tight bulkhead without openings shall be fitted between the hold and the after-deck where the crew are accommodated; and in vessels fitted with a poop the bulkhead shall be placed immediately in front of the poop. In decked vessels the bulkhead shall reach up to the deck; in all other vessels it shall reach to within six inches of the gunwhale.

58. *Fire, lights and smoking.*—(1) No fire, naked light of any description, and no smoking, shall be allowed on any part of a vessel transporting dangerous petroleum except abaft the solid bulkhead.

(2) The navigation lights on any such vessel shall be carried abaft the bulkhead.

59. *Carriage of other inflammable cargo.*—No inflammable cargo other than dangerous petroleum or other petroleum products shall be carried.

Explanation.—Inflammable cargo does not include the dunnage used for packing purposes.

60. *Fire buckets.*—Buckets containing sand shall be placed at convenient points on the vessel. Not less than two buckets shall be placed on the after-deck.

61. *Conditions of transport by steam or motor vessels.*—Dangerous petroleum shall not be transported by steam or motor vessels engaged in coastal trade and not properly constructed for the carriage of petroleum in bulk except subject to the following conditions :—

(*a*) Only iron or steel vessels shall be used for the carriage of dangerous petroleum.

(*b*) The bulkheads dividing the space or compartment allotted to this cargo from any other space shall be perfectly gas-tight and without openings and where there are bilge sluices, these shall be sealed efficiently and remain unopened while any dangerous petroleum is on board. The whole compartment (where it is possible to allot a separate hold for this class of cargo) shall be as nearly as possible hermetically sealed.

(*c*) Where dangerous petroleum is only a proportion of the total cargo in a hold, efficient ventilators shall be provided, half of which shall extend to the bottom of the space and other half only a short distance below the deck. The short ventilators shall be labelled "Outlet or to Leeward" and the long "Inlet or to Windward". These ventilators shall have large cowl heads, the openings being covered with double fine brass wire gauze.

(*d*) Dangerous petroleum shall be contained in receptacles complying in all respects with the provisions of rule 27.

(*e*) Special precautions shall be taken against smoking and the use of lights or fire of any kind while the cargo is being loaded or unloaded, or while the hatches are off, or any deck openings uncovered. Before any lights are used in the compartment which contains dangerous petroleum precautions shall be taken to ensure that the space is clear of the vapour. The screwplugs of empty receptacles which have contained dangerous petroleum shall be tightly adjusted.

(*f*) In cargo ships a limited quantity of dangerous petroleum may be carried on deck in sound steel drums or substantial tins in cases, so stowed as not to interfere with the navigation of the ship, or make it unseaworthy. No receptacle shall be of greater capacity than 50 gallons.

(*g*) Dangerous petroleum shall be protected from the direct rays of the sun by the use of a canvas awning or otherwise.

(*h*) In passenger ships engaged in coastal voyages a limited quantity of dangerous petroleum may be carried on deck provided proper precautions are taken regarding stowage and keeping the packages away from passenger's promenade, or deck space.

(*i*) Where dangerous petroleum is carried on deck, conspicuous notices shall be posted up drawing attention to the danger arising from smoking or striking matches near the deck cargo.

PART IV.—TRANSPORT ON LAND BY VEHICLES.

62. *Prohibition of fires and smoking.*—(1) no fire or artificial light capable of igniting inflammable vapour shall be allowed on any vehicle containing petroleum in bulk.

(2) No person shall smoke while on or attending such a vehicle.

(3) No article or substance capable of causing fire or explosion shall be carried on such a vehicle.

Explanation.—For the purposes of this rule any tank or other receptacle which has contained petroleum and which has not been thoroughly cleaned and freed from inflammable vapour shall be deemed to contain petroleum.

63. *Precautions against fire.*—Tank wagons, lorries or carts transporting dangerous petroleum shall not be filled, discharged or emptied, (*i*) except by means of armoured hose in which the armouring is electrically continuous throughout and/or metal pipes; or (*ii*) within 100 feet of any fire, furnace or artificial light capable of igniting inflammable vapour; or (*iii*) at any place where the lorry, wagon or cart is exposed to sparks.

Provided that the distance specified in clause (*ii*) may be reduced to 30 feet when the petroleum is filled, discharged or emptied under seal and closed vapour return pipe lines are provided.

64. *Means of extinguishing fire to be carried.*—A supply of sand or other efficient means of extinguishing an outbreak of fire shall be carried in an easily accessible position on every vehicle transporting petroleum in bulk by road.

65. *Prohibition as to public service vehicles.*—Petroleum shall not be transported on any public vehicle which is carrying passengers.

66. *Vehicles to be constantly attended.*—(1) Every vehicle while engaged in the transport of petroleum by road shall constantly attended by at least one person provided that such vehicles may be left unattended in places previously approved by the Chief Inspector.

(2) Every vehicle on which more than 1,000 gallons of petroleum is being transported by road, or which, while transporting any petroleum by road is being trailed by another vehicle, shall so long as it is in motion, be attended by at least two persons.

67. *Trailers attached to vehicles transporting petroleum by road.*—(1) A trailer not exclusively used or intended to be used exclusively for transporting petroleum shall not be attached to any vehicle transporting petroleum.

(2) A trailer transporting petroleum shall not be attached to any vehicle other than a vehicle used or intended to be used exclusively for transporting petroleum, and not more than one trailer shall be so attached.

(3) A trailer shall have two axles.

(4) When a trailer is attached to a vehicle, the total quantity of petroleum transported on the trailer and the vehicle combined shall not exceed 2,000 gallons.

(5) If a trailer transporting dangerous petroleum is attached to a vehicle transporting non-dangerous petroleum, the vehicle shall comply with all the provisions of these rules relating to vehicles transporting dangerous petroleum.

(6) A trailer other than a tank trailer shall not be attached to a tank wagon. The capacity of a tank trailer shall not exceed 500 gallons, and no trailer shall be attached to a tank wagon of greater capacity than 1,500 gallons.

(7) No trailer attached to a tank wagon shall be employed within any thickly populated area without the permission in writing of the Local Authority.

68. *Tank capacity.*—In these rules the tank forming part of a tank wagon or tank trailer includes one or more tanks on the same chassis and any limitation herein prescribed on the capacity of a tank shall be construed so as to permit of the tank containing amount specified under varying degrees of temperature.

69. *Employment of electric light.*—If electric lighting is employed on any vehicle, including a trailer used in the transport of petroleum by road the following conditions shall be complied with :—

(*i*) The pressure shall not exceed sixteen volts.

(*ii*) The circuit shall be heavily insulated and shall be independent of the chassis, and the wiring shall be so fixed and protected as to reduce as far as possible the risk of damage.

(*iii*) The generator, battery, switches and fuses shall be carried in front of the fire-resisting screen and the battery shall be in an easily accessible position.

(*iv*) Means of cutting off the current close to the battery by a double pole switch or other suitable method shall be provided.

70. *Fueling from vechiles carrying petroleum in bulk.*—(1) No motor conveyance other than aircraft shall fill or replenish its fuel tanks with petroleum directly from vehicles carrying petroleum in bulk.

(2) Aircraft may receive fuel by means of specially constructed tank lorries or wagons only if these are of a type approved by the Chief Inspector for this purpose.

(3) During the fueling of aircraft used for the conveyance of passengers no passengers shall be allowed to remain in the machine.

(4) No person shall be allowed to smoke within 100 yards of any aircraft while it is being, or is about to be, fueled. All aircraft engines within that radius shall be stopped so long as fueling is in progress.

71. *Owner responsible for observance of rules.*—The owner of a vehicle used for the transport of petroleum who employs any person in connection with such transport, shall be responsible that all necessary measures have been taken to ensure that such person is acquainted with and carries out the provisions of these rules.

72. *Precautions to be observed during filling or emptying tank wagons.*—During the filling, discharging or emptying of any tank wagon or trailer transporting petroleum other than heavy petroleum the following precautions shall be observed :—

(*i*) If the vehicle is mechanically-driven the engine shall be stopped so long as the filling, discharging or emptying is in progress and shall not be restarted until all tanks and valves have been securely closed :

Provided that this condition need not apply in the case of vehicles approved under sub-rule (2) of rule 70, which are supplying aircraft.

(*ii*) If the wagon is drawn by an animal or animals, they shall be removed from the wagon and the wheels securely scotched before the filling, discharging or emptying is begun.

(*iii*) Adequate provision shall be made to prevent the accumulation of a dangerous static charge of electricity.

(*iv*) The vehicle shall be constantly attended by a competent person.

73. *Composite vehicles.*—Petroleum in cans or other receptacles shall not be transported by road on any tank wagon used for the transport of petroleum unless the wagon is so constructed as to comply with the conditions applicable to transport on wagons other than tank wagons as well as with the conditions applicable to transport on tank wagons.

74. *Filling and dipping pipes to be kept closed.*—Except during the operations of filling or emptying a tank wagon the filling and dipping pipes shall be kept securely closed at all times. Where the filling pipes are not provided with a liquid seal, the covers shall be kept locked except during the operation of filling a tank wagon, and the keys shall not be carried on the wagon.

75. *Filling and emptying by night.*—Except where approved electric lighting as specified in rule 103 is exclusively used, the filling, discharging and emptying of tank wagons shall be performed between the hours of sunrise and sunset.

76. *Approval of vehicles for transport in bulk necessary.*—(1) Petroleum in bulk shall not be transported by land except in a vehicle of a design approved in writing by the Chief Inspector.

(2) All such vehicles other than those exclusively used for the transport of heavy petroleum must have a stamped embossed, painted or printed warning exhibiting in conspicuous characters the words "Petrol" or "Motor Spirit" or "Kerosene" or an equivalent warning of the nature of the contents.

(3) Every such vehicle and its fittings shall be maintained in good condition.

77. *Vehicles for transport other than in bulk.*—(1) Every vehicle on which petroleum not in bulk is transported shall be strongly constructed and with sides and back of adequate height and shall be maintained in good condition.

(2) In the case of an animal drawn vehicle the requirement in sub-rule (1), regarding the sides and back of the vehicle shall not apply if the load is securely fastened to the vehicle.

(3) All receptacles shall be so packed as not to project beyond the sides or back of the vehicle.

78. *Engines of mechanically-driven vehicles.*—(1) In every mechanically-driven vehicle used for the transport by road of petroleum other than heavy petroleum:—(*a*) the engine shall be of an internal combustion type, (*b*) the engine fuel tank and electric batteries shall be effectively screened from the body of the vehicle by a fire-resisting shield carried up above the height of the load and down to within twelve inches of the ground, (*c*) the exhaust shall be wholly in front of the fire-resisting shield.

(2) If windows are provided in the fire-resisting shield they shall be fitted with wired glass.

(3) The fuel tank of every such vehicle other than an articulated vehicle may be behind the fire-resisting shield if—

(*a*) a fuel feed apparatus, placed in front of the shield, is used to lift the contents from the fuel tank; and

(*b*) the fuel tank is protected from blows by the frame or by stout steel guards, and the filling hole cover is provided with a lock.

(4) The fuel tank of any vehicle may be behind the fire-resisting shield if the fuel used in the engine does not give off an inflammable vapour at a temperature of less than 150°F.

(5) A quick action cut-off valve shall be fitted to the fuel feed pipe of every such vehicle in an easily accessible position, which shall be clearly marked.

79. *Exemptions from rules 77 and 78.*—If the Chief Inspector is satisfied that in respect of any class of vehicle any of the requirements of rules 77 and 78 may be safely suspended or relaxed, he may authorise such suspension or relaxation for such period and under such conditions as he may think fit.

80. *Speed limit for vehicles.*—Without prejudice to the operation of any other provision of law for the time being in force whereby a lower limit of speed is imposed, the speed of a motor tank wagon, or a motor lorry transporting petroleum in receptacles shall not exceed 30 miles per hour if fitted with pneumatic tyres and 15 miles per hour if fitted with solid tyres.

81. *Special provisions for motor conveyances.*—(1) Rules 62 to 80 shall not apply to the conveyance of petroleum in any motor conveyance for use only in the propulsion of such conveyance.

(2) No vehicle used for the conveyance of passengers on hire shall carry any petroleum elsewhere than in the fuel tank or tanks of such vehicle.

(3) During the filling or replenishment of the fuel tank of a vehicle for the conveyance of passengers on hire, no passengers shall be allowed to remain in the vehicle.

(4) Notwithstanding anything contained in sub-rule (2) the authority licensing such motor conveyance may allow a vehicle used for the conveyance of passengers to carry in addition, for use only in the propulsion of the vehicle, a quantity of petroleum in two gallon tins not exceeding ten in number.

(5) All petroleum tins carried on a vehicle carrying passengers for hire shall be securely closed and shall be carried in a specially prepared receptacle which is not accessible to passengers in the vehicle and is approved in writing by the Chief Inspector.

PART V.—TRANSPORT BY PIPE LINES.

82. *Application.*—The rules in this Part apply only to the transport of petroleum by means of pipe lines.

83. *Casings.*—(1) An approved casing shall be put over the pipe line where it crosses under any railway or road and an approved protective casing shall be constructed round the pipe where it crosses over any railway or protected work.

(2) An extra casing shall be put over the pipe line where it crosses any stream:

Provided that the District Authority may, on the recommendation of the Chief Inspector, waive this rule in the case of any specified stream or streams, if it is satisfied that the safety of the public is not likely to be endangered thereby.

84. *Patrol.*—The whole of every pipe line shall be sufficiently and efficiently patrolled.

85. *Prevention of excessive pressure.*—As a precaution against excessive pressure in the pipe line, an automatic bypass relief valve and a reliable pressure gauge shall be placed on the common discharge pipe at pumping stations.

86. *Telegraph and telephone.*—A telephone or telegraph line shall be provided with connections at frequent intervals along the pipe line. One telephone or telegraph line shall suffice for a series of parallel pipe lines:

Provided that this rule shall not apply to a pipe line connecting railway sidings with installations if the length of such pipe line does not exceed one mile.

87. *Gate valves.*—Gate valves shall be provided at reasonable intervals.

88. *Checking of tank gauges.*—Tank gauges shall be checked between stations at frequent intervals.

CHAPTER III.

Storage of Petroleum Requiring Licence.

89. *License for storage.*—Save as provided in sections 7, 8 and 9 of the Act and by rule 107 no one shall store any petroleum except under a licence granted under these rules.

90. *Precautions against fire.*—(1) No person shall smoke in any installation or storage shed.

(2) No person shall carry matches, fusees or other appliance liable to produce ignition or explosion in any installation or storage shed which is used for the storage of dangerous petroleum.

(3) No fire, furnace or other source of heat or light capable of igniting inflammable vapour shall be allowed in any installation or storage shed save in places specially authorised by the licensing authority for the purpose.

(4) An adequate supply of sand or dry earth together with the necessary implements for its convenient application, or other efficient means of extinguishing petroleum fires, shall always be kept in every installation and storage shed.

91. *Supervision of operations within an installation or storage shed.*—All operations within an installation or storage shed shall be conducted under the supervision of an experienced responsible agent or supervisor.

92. *Cleanliness of installation.*—The ground in the interior of an installation, and the protected area surrounding any storage shed or installation, shall be kept clean and free from all inflammable material, waste vegetation and rubbish.

Explanation.—In this rule "protected area" means the area necessary for the maintenance of the distances required under the conditions of the licence to be kept clear between any installation or storage shed and any protected work.

93. *Drainage.*—(1) All enclosures surrounding tanks or buildings belonging to an installation or storage shed shall be kept drained and no water shall be allowed to accumulate in the enclosure.

(2) Where drainage is effected by means of a pipe, the pipe shall be fitted with a valve actuated from the outside of the enclosure.

(3) All valves and other openings for draining off water shall be kept closed except when water is being drained off.

(4) The nature of the drainage arrangements shall be shown in the plan submitted with the application for a licence.

94. *Exclusion of unauthorised persons.*—(1) An installation shall always be surrounded by a wall or fence of at least six feet in height.

(2) Due precautions shall be taken to prevent unauthorised persons from having access to any storage shed or installation.

95. *Receptacles for non-bulk petroleum.*—All petroleum not in bulk shall be stored in receptacles complying with the conditions laid down in rules 26, 27 and 28.

96. *Petroleum only to be stored.*—No installation or storage shed shall be used for any purpose other than the storage and distribution of petroleum without permission in writing from the Chief Inspector.

97. *Marking of capacity of tanks.*—The capacity in gallons of every tank in an installation shall be conspicuously marked on it.

98. *Construction of tanks.*—(1) Every tank or other receptacle used for the storage of petroleum in bulk shall be constructed of iron or steel properly erected and designed according to sound engineering practice; and, together with all pipes and fittings, shall be so constructed and maintained as to prevent any leakage of petroleum.

(2) The height of a storage tank shall not exceed its diameter:

Provided that in the case of tanks of less than 10,000 gallons capacity, the height may extend to one and half times the diameter.

(3) No tank shall be more than 45 feet in height.

99. *Testing of tanks.*—(1) Storage tanks or other receptacles used for the storage of petroleum in bulk, after being placed in a final position and before being brought into use, must be tested by water pressure by the licensee in the presence of an Engineer accepted as qualified for the purpose by the licensing authority.

(2) The water used for testing shall be free from petroleum and shall not be passed through any pipes or pumps ordinarily used for the conveyance of petroleum:

Provided that where the licensing authority is satisfied that it is not reasonably possible to convey water by pipes or pumps other than those ordinarily used for the conveyance of petroleum, he may permit the use of a petroleum-pipe or pump for the conveyance of water subject to such conditions as he may impose.

(3) Sub-rules (1) and (2) shall also apply to storage tanks or other receptacles already in use for the storage of petroleum in bulk when tested for repairs by filling.

100. *Earthing of tanks.*—All tanks or other receptacles for the storage of petroleum in bulk, other than well-head tanks or tanks or receptacles of less than 10,000 gallons capacity containing heavy petroleum, shall be electrically connected with the earth in an efficient manner by means of not less than two separate and distinct connnections placed at opposite extremities of such tank or receptacle. The roof and all metal connections of such tank or receptacle shall be in efficient electrical contact with the body of such tank or receptacle.

Explanation.—In this rule the expression "well-head tank" means a tank into which crude petroleum flowing or being pumped from a well is first discharged.

101. *Inspection of earth connections.*—(1) The connections and contacts required by rule 100 shall be inspected and tested at least once in every year by the licensee of the tank or receptacle in the manner prescribed by the Chief Inspector.

(2) A record of such inspections and tests shall be maintained by such licensee, and shall be produced on demand by the Chief Inspector or an Inspector.

102. *Night Working.*—No installation of storage shed shall be open, and no work in any installation or storage shed shall be permitted, between sunset and sunrise except where approved electric lighting as specified in rule 103 is exclusively used.

103. *Electric Apparatus.*—(1) All electric wires installed at less than 15 feet from the ground in any petroleum installation or situated within 20 feet of any building or tank containing dangerous petroleum shall consist of insulated cables, enclosed in metallic coverings which shall be gas-tight, electrically and mechanically continuous throughout, and effectively earthed outside the building.

(2) No electric wire shall pass over any petroleum tank, filling, painting or storage shed.

(3) The following additional requirements shall be satisfied in filling, painting and storage sheds and pump rooms used for -

(*i*) Dangerous petroleum:—

(*a*) All electric meters, distribution boards, switches, fuses, plugs and sockets shall be placed outside the building in a flame-proof enclosure which shall satisfy the requirements of the British Standard Specification No. 299 and the frames shall be exectively earthed.

(*b*) All electric fixed lamps shall be enclosed in a well glass flame-proof fitting, either douoly enclosed with an inner and an outer well glass or singly enclosed with substantial metal protection; such lamps shall be installed at 12 feet where possible but in no case less than 8 feet above the floor level.

(*c*) All electric portable hand lamps of the self-contained pattern shall be of a type approved by the Chief Inspector.

(*d*) For the examination of cans and other containers, electric torches employing a separate battery may be used. These torches shall be fitted with substantially protected flame-proof globes and shall be supplied through a cable of cabtyre or other suitable sheathing and properly constructed flame-proof connectors.

(*e*) No single fixed lamp shall exceed 150 watts.

(*ii*) Non-dangerous petroleum:—

(*a*) All electric meters, distribution boards, switches, fuses, plugs and sockets shall be enclosed in iron-clad, gas-tight cases and fixed at least 5 feet above the floor level in well-ventilated positions close to the door.

(*b*) All electric fixed lamps shall be enclosed in a gas-tight well glass fitting provided with substantial metal protection.

(*c*) All electric portable hand lamps shall be fitted with substantially protected gas-tight globes and supplied through a flexible cab-tyre or other suitable sheathing and properly constructed gas-tight connectors.

(*d*) No single fixed lamp shall exceed 200 watts and no hand lamp shall exceed 30 watts.

104. *Storage and filling sheds.*—Every filling or storage shed in which dangerous petroleum is filled or stored shall be constructed of uninflammable material and shall be adequately ventilated near the ground level immediately above any walls constructed to prevent any leakage of petroleum, and also near or in the roof. The ventilators shall be provided with two thicknesses of fine copper or other non-corroding metal wire gauge of mesh not less than 28 to the linear inch:

Provided that in an installation where special precautions are taken or where there are special circumstances that, in the opinion of the Chief Inspector warrant the concession, he may permit the wire gauze to be replaced by approved wire netting or expanded metal.

105. *Pumping.*—No internal combustion engine or electric motor shall be used for driving pumps for pumping petroleum save in a pump house specially constructed for the purpose and under such conditions as may be approved by the Chief Inspector:

Provided that this rule shall not apply where the motor, control switchgear and starting apparatus are enclosed in a flame-proof enclosure satisfying the requirements of the British Standard Specification No. 229.

106. *Posting up of rules and conditions.*—There shall be hung up in a conspicuous place in every installation and storage shed copies of these rules, and of the conditions of the licence.

CHAPTER IV.

Storage of Petroleum not Requiring Licence.

107. *Exemption of heavy petroleum.*—(1) Notwithstanding anything contained in these rules, it shall be permissible to store without licence, subject to the conditions of this Chapter, heavy petroleum in quantities not exceeding 5,000 gallons, which is not stored in the same installation or storage shed as other petroleum.

(2) The provisions of Chapter III shall not apply to petroleum so stored.

108. *Storage of exempted heavy petroleum in bulk.*—(1) Heavy petroleum in bulk, if stored otherwise than under a licence, shall be stored in a tank constructed of iron or steel properly erected and designed and the tank with all pipes and fittings shall be so constructed and maintained as to prevent any leakage of petroleum.

(2) The tank shall be surrounded by a bank or wall, or sunk in a pit, so constructed and maintained as to be able to contain without leakage the whole of the petroleum liable to be present at any one time in the tank.

(3) A distance of not less than ten feet shall be kept clear between the protected works and the enclosure walls or banks.

109. *Storage of exempted heavy petroleum not in bulk.*—Heavy petroleum which is not in bulk, if stored otherwise than under a licence, shall, if the quantity exceeds 500 gallons, be stored in a storage shed of which either—

(*a*) the doorways and other openings shall be built up to a height of one foot above the level of the floor, or

(*b*) the floor shall be sunk to a depth of one foot.

110. *Prior report of storage of exempted heavy petroleum.*—Every person intending to store heavy petroleum in bulk or in quantity exceeding 500 gallons otherwise than under a licence shall send to the Chief Inspector a prior report giving the situation of the premises on which such petroleum is to be stored.

111. *Garages and hangars.*—(1) Every garage or hanger used for housing any motor conveyance containing dangerous petroleum in bulk in any tank incorporated in the conveyance, whether such petroleum is intended to be used to generate motive power for the conveyance or not, shall be constructed of uninflammable material and be effectively and safely ventilated to the open air.

(2) Every such garage or hanger shall be in charge of an experienced person who shall be responsible for taking all proper precautions against fire and shall prevent unauthorised persons from having access to the building.

CHAPTER V.

Licenses.

112. *Applications for licences.*—(1) A person wishing to obtain or to renew a licence prescribed under these rules shall submit an application in writing to the authority empowered to grant such licence.

(2) Every application for the grant or renewal of a licence to store or to import and store petroleum shall be in Form D.

113. *Grant of licences.*—(1) Licences for importation and storage may be granted by the licensing authorities set forth in Schedule I in the forms, for the purposes, for the periods and on payment of the fees specified therein.

(2) No licence in Form H shall be granted except to a person holding a licence in Form I.

(3) In the case of a licence granted for storage one copy of the plan or plans of the storage premises signed in token of approval by the licensing authority shall be attached to the licence and one copy shall be filed for record in the office of the licensing authority.

114. *Particulars of Licence.*—Every licence granted under these rules shall be held subject to the conditions endorsed on it and shall contain all the particulars which are contained in the form prescribed for it by these rules.

115. *Power of licensing authority to alter conditions.*—(1) Notwithstanding anything contained in rule 114 the licensing authority may omit, alter or add to any of the conditions specified in the prescribed form of licence.

(2) This power shall not be exercised by the District Authority without the prior concurrence of the Chief Inspector.

116. *Amendment of licences.*—(1) Any licence granted under these rules may be amended by the authority granting such licence provided that the amendments are not in conflict with any rule contained in this chapter.

(2) A licensee who desires to have his licence amended shall submit it to the licensing authority with an application stating the nature of the amendment and the reasons for it.

(3) The fee for the amendment of a licence shall be one rupee *plus* the amount (if any) by which the fee that would have been payable if the licence had originally been issued in the amended form exceeds the fee paid for the original licence.

117. *Renewal of licences.*—(1) A licence may be renewed by the authority empowered to grant such licence.

(2) Every application for the renewal of a licence shall be made not less than thirty days before the date on which the original licence expires, and, if the application is so made, the premises shall be held to be duly licensed until such date as the licensing authority issues the renewed licence or until an intimation that the renewal of the licence is refused has been communicated to the applicant.

(3) The same fee shall be charged for the renewal of a licence as for a new licence.

118. *Refusal of licence.*—(1) A licensing authority refusing to grant, amend or renew a licence, shall record his reasons for such refusal in writing.

(2) A copy of the order containing the reasons for such refusal shall, on payment of the fee ordinarily charged for copies of similar documents, be given to the applicant.

119. *Forfeiture of licence.*—Every licence granted under these rules shall be liable to be forfeited for any contravention of the Act, or of any rule thereunder, or of any condition contained in such licence, or save in the case of licences in Form K, for any other reason deemed by the licensing authority to be good and sufficient, and recorded by him in writing.

120. *Appeals.*—(1) Any person may appeal to the Governor General in Council from an order of the Chief Inspector refusing to grant, amend or renew a licence or forfeiting a licence.

(2) Any person may appeal to the immediate official superior of the District Authority from an order of the District Authority refusing to grant, amend or renew a licence or forfeiting a licence.

(3) Every appeal shall be in writing and shall be accompanied by a copy of the order against which the appeal is made.

(4) The immediate official superior of the District Authority shall consult the Chief Inspector before passing orders on any appeal.

121. *Supply of rules.*—With every licence granted for the storage of petroleum, a copy of these rules shall be given to the licensee.

122. *Certificates of safety.*—(1) Before petroleum is stored in any installation for which a licence has been granted for the first time, a certificate shall be furnished to the licensing authority to the effect that all enclosure walls and embankments required to be constructed under the conditions of the licence are sufficient to ensure safety.

(2) The certificate shall be signed by an Engineer accepted as qualified for the purpose by the licensing authority.

(3) When the licence is not granted for the first time, but is granted for an increased quantity of petroleum, a certificate shall similarly be furnished to the licensing authority before any quantity of petroleum exceeding the amount which was admissible under the former licence is stored in the installation.

123. *Transfer of licences for storage.*—(1) The holder of a licence for the storage of petroleum may, at any time before the expiry of the licence, apply for permission to transfer his licence to another person.

(2) Such application shall be made to the licensing authority who shall, if he approves of the transfer, enter upon the licence, under his signature, an endorsement to the effect that the licence has been transferred to the person named.

(3) A fee of Re. 1 shall be charged on each such application.

(4) The person to whom the licence is so transferred shall enjoy the same powers and be subject to the same obligations under the licence as the original holder.

124. *Procedure on death or disability of licensee.*—(1) Where a licensee dies or becomes insolvent or becomes mentally incapable or otherwise disabled, the person carrying on the business of such licensee shall not be liable to any penalty or forfeiture under the Act or these rules for exercising the powers granted to the licensee by the licence during such time as may reasonably be necessary to allow him to make an application for a new licence in his own name for the unexpired portion of the original licence.

(2) A fee of one rupee shall be charged for a new licence for the unexpired portion of an original licence granted to any person applying for it in accordance with the provisions of this rule.

125. *Loss of licence.*—Where a licence granted under these rules is lost or accidentally destroyed, a duplicate may be granted on payment of a fee of one rupee.

126. *Payment of fees.*—(1) Every application for the grant or renewal of a licence shall be accompanied by the fee payable thereon. If the licence is not granted or renewed, the fee shall be refunded.

(2) All fees chargeable under these rules in respect of licences granted by the District Authority shall be paid by means of impressed stamps.

(3) The payment of all other fees under these rules shall be made in cash or by cheque.

127. *Power to exempt from payment of fees.*—The Governor-General in Council may, by general or special order, grant exemption from, or reduction of, any fee payable under these rules.

128. *Production of licences on demand.*—(1) Every person holding or acting under a licence granted under these rules shall produce it, or an authenticated copy of it, at the place to which the licence applies, when called upon to do so by the Chief Inspector or an Inspector, or any Magistrate, or any Police Officer not below the rank of an officer in charge of a police-station.

(2) Copies of any licence may, for the purposes of this rule, be authenticated free of charge by any of the aforesaid officers or by the authority which granted the licence.

129. *Procedure on reports of infringements.*—The District Authority shall inform the Chief Inspector of the action taken by it on any reports of infringements of the Act or of these rules which the Chief Inspector may make to such authority.

CHAPTER VI.

Refining and Blending of Petroleum.

130. *Approval of refinery.*—No person shall refine or blend petroleum unless the plans showing the general arrangement of tanks, stills, fencing, gates, and all plant and buildings at the place where it is proposed to refine or blend petroleum (hereinafter in this Chapter referred to as the refinery) have been approved by an officer appointed by the Governor-General in Council in this behalf.

131. *Application of rules.*—Rules 132 to 147 inclusive apply only to refineries.

132. *Stills, condensing pipes and tanks.*—The materials used in the construction and the method of erection of the stills, condensing pipes and tanks shall be such as are approved by the officer appointed under rule 130.

133. *Alterations.*—No alteration in a refinery involving the general arrangement of tanks, stills, any other plant and buildings or the materials used in the construction or the method of erection of the stills, condensing pipes and tanks shall be carried out without the previous sanction in writing of the officer appointed under rule 130. The alterations sanctioned shall be shown on an amended plan a copy of which shall be kept at the refinery.

134. *Use of fire-proof materials.*—All buildings of a refinery in which petroleum is handled shall be built of fire-proof materials.

135. *Licensing of buildings and tanks.*—All buildings and tanks in which petroleum is stored shall be licensed in form L and shall, unless otherwise provided for in this Chapter, comply with the conditions endorsed on that licence and with the rules for the storage of petroleum.

136. *Situation of storage tanks.*—No storage tank, the capacity of which exceeds 50,000 gallons, shall be situated nearer than 300 feet to any still, boiler or furnace.

137. *Size of service tanks.*—Service tanks (*i.e.*, tanks which contain fuel for boiler and still fires) shall not be larger than is necessary to contain 24 hours fuel for the fire which they serve.

138. *Drainage.*—Suitable arrangements shall be made for the proper carrying off and fire-trapping of all drainage and/or possible leakage from a still or bench of stills.

139. *Fires and Smoking.*—(1) No fire, furnace or source of heat or light capable of igniting inflammable vapour shall be allowed except in the firing spaces of stills or boilers.

(2) No smoking shall be allowed except in spaces or buildings specially provided or allotted for the purpose, and approved by the officer appointed under rule 130.

140. *Supply of sand or earth.*—(1) A sufficient quantity of sand or dry earth together with the necessary implements for its convenient application and/or other efficient means of extinguishing petroleum fires shall always be kept readily accessible near tanks and stills.

(2) The quantity of sand or dry earth which shall be deemed sufficient shall be determined by the Chief Inspector or by the officer appointed under rule 130.

141. *Hydrants and hoses.*—(1) In the case of a refinery with a still capacity exceeding on an average 1,000 gallons daily, hydrants with a minimum pressure of 40 lbs. with the necessary hose shall be provided at suitable points. These shall be shown in the original plans of such a refinery.

(2) Both hydrants and hose shall be kept in a thoroughly efficient condition.

142. *Pumping of light fractions.*—The light fractions (*i.e.*, dangerous petroleum) as they leave the stills shall be at once pumped out of the refinery to storage tanks, and shall not be stored in the immediate neighbourhood of stills and boilers, with the exception of such quantities as may be pumped direct to service tanks for fuel:

Provided that the officer appointed under rule 130 may permit light fractions to be disposed of otherwise.

143. *Prevention of danger from electricity.*—Adequate provision shall be made to prevent the accumulation of dangerous static charges of electricity.

144. *Fencing.*—Every refinery shall be surrounded by an efficient fence.

145. *Plans.*—Fire walls and efficient separators for drainage shall be shown in the plans referred to in rule 130 and may be required to be erected when deemed necessary by the Chief Inspector or by the officer appointed under rule 130.

146. *Reports of fires.*—The occurrence of any fire at a refinery shall be reported immediately by the person in charge of the refinery for the time being to the nearest police-station and to the Chief Inspector.

147. *Closing of refinery.*—If a refinery is closed down, the area within the fence surrounding it shall be cleared of all petroleum having a flashing point below 200°F. as soon as possible.

CHAPTER VII.

Tetra Ethyl Lead Mixtures.

148. *Addition of tetra ethyl lead.*—Tetra ethyl lead shall not be added to petroleum in such quantity as to render the proportion of tetra ethyl lead to petroleum in excess of one part in 1,300 parts by volume or one part in 650 parts by weight.

149. *Importation, transport and storage.*—No person shall import, transport or store any petroleum containing tetra ethyl lead in which the proportion of tetra ethyl lead exceeds one part in 1,300 parts by volume or one part in 650 parts by weight.

150. *Coloration.*—Every mixture of petroleum and tetra ethyl lead shall be distinctively coloured before being sold to the public.

151. *Marking of receptacles.*—All receptacles containing a mixture of petroleum and tetra ethyl lead shall bear a warning in the following terms—

"*Warning*

This mixture contains tetra ethyl lead, and is not to be used except for motive power. Be careful not to spill."

CHAPTER VIII.

Testing of petroleum.

152. *Drawing of samples.*—(1) In all cases the sampling officer shall personally superintend the drawing of the sample. Where the sample is drawn from an original unopened receptacle containing petroleum not in bulk an opening sufficiently large to admit of the sample being rapidly transferred from the receptacle shall be made.

(2) Two bottles, each of the capacity of about 40-fluid ounces, shall be filled to three-quarters of their capacity with the sample and corked. The corks shall be well driven home and cut off level with the neck; and melted sealing wax shall be worked into the corks and the bottles shall be efficiently sealed.

(3) In the case of petroleum imported by sea the bottles containing the sample shall, after being sealed, be labelled with the name of the ship, the name of the consignee, and such other distinguishing marks as may be necessary.

153. *Forwarding and retention of samples.*—One of the bottles referred to in sub-rule (2) of rule 152 shall be preserved for reference in case of need and the other shall be forwarded to the testing officer.

154. *Procedure for delivery of samples from ship's cargo.*—(1) When the master of, or the agent for, a ship has made the declaration required by rule 8, the sampling officer shall go on board the vessel and obtain samples of all the petroleum on board which it is intended to land at the port. If the importer so desires the sampling officer shall also take samples of all the petroleum on board which it is intended to land at any other port in British India:

Provided that no samples need be taken in the case of petroleum which is declared to be dangerous.

(2) The master shall deliver to the sampling officer, without charge, samples of every variety of petroleum comprised in the petroleum of which samples are to be taken under sub-rule (1). Such samples shall, if the sampling officer so requires, be taken from the particular receptacles indicated by him:

Provided that when the petroleum is in cases, samples may be taken as delivery proceeds.

155. *Selection of samples from ship's cargo.*—The minimum number of samples to be selected of each brand or quality contained in the cargo shall be as follows:—

(*a*) of peroleum certified in accordance with rule 11—

(*i*) in cases—one sample for every 15,000 cases or part thereof;

(*ii*) in casks or drums declared to be of uniform quality—one sample for every 120,000 gallons or part thereof;

(*iii*) in bulk or in tanks—one sample from each group of tanks or tank compartments certified to be of the same brand or quality;

(*b*) of other petroleum—

(*i*) in cases—one sample for every 10,000 cases or part thereof;

(*ii*) in casks or drums, declared to be of uniform quality—one sample for every 80,000 gallons or part thereof;

(*iii*) in bulk or in tanks—one sample from each tank or tank compartment.

156. *Standard Test Apparatus.*—(1) The standard test apparatuses and thermometers shall—

(*a*) agree in every respect with the specifications laid down in Schedule III; and

(*b*) be tested at the National Physical Laboratory, London, and marked with the National Physical Laboratory monogram and the year of test.

(2) The standard thermometers shall be replaced at least once in every three years.

157. *Certification of Apparatus.*—(1) The thermometers forming part of an apparatus submitted under sub-section (1) of section 16 of the Act shall be compared with the thermometers of the Standard Test Apparatus at 76° and 120°F. The apparatus and barometers or aneroids shall also be examined by the officer appointed under sub-section (1) of section 15 of the Act.

(2) Any apparatus which is in any respect outside the tolerances laid down in Schedule III and any thermometers differing more than 1°F. and any barometer or aneroid differing more than half an inch from the standard shall be rejected.

(3) A certificate in Form E shall be granted in respect of any apparatus which has been found to agree with the Standard Test Apparatus within the limits mentioned in clause (2) of this rule.

(4) A certificate granted under this rule shall be valid for a period of three years.

158. *Register of Certificates.*—A register of all certificates granted under rule 157 shall be maintained by the officer appointed under sub-section (1) of section 15 of the Act in Form F.

159. *Methods of test.*—(1) The testing officer shall test the samples in the manner laid down in Schedule III to these Rules.

(2) In all cases at least three samples shall be separately tested, the average of the three readings being corrected for the thermometer correction, if any, and for barometric correction in case of dispute only.

(3) If the average flashing-point is not lower than 76°F. and no one test gives a flashing-point below 73°F. the whole of the petroleum represented by the samples shall be deemed to be non-dangerous petroleum.

160. *Procedure when tests show want of uniformity.*—(1) If the testing officer, after testing samples taken from a ship's cargo, considers further tests necessary to satisfy himself that none of the petroleum is dangerous, he shall report to the Collector of Customs accordingly.

(2) On receipt of a report under sub-rule (1)—

(*a*) when the consignment is imported in cases or casks or drums, the Collector of Customs shall cause the petroleum in question to be landed and stacked in lots of not more than 1,500 cases or casks or drums each, or to be discharged into boats each containing not more than 1,500 cases or casks or drums, and the sampling officer shall select and deliver to the testing officer one sample from each lot;

(*b*) When the consignment is imported in bulk, the sampling officer shall forward a second sample and the Collector of Customs may, until the receipt of the testing officer's further report, prevent the landing of any portion of the contents of the tank in question, or may permit it to be landed as provided in rule 15;

(*c*) if the petroleum has been already landed and stored under rule 15—

(*i*) if it is not in bulk it shall be divided into lots and samples of each lot shall be selected as laid down in clause (*a*);

(*ii*) if it is in bulk samples shall be drawn from each separate storage tank containing the petroleum.

161. *Certificate of tests.*—(1) The testing officer shall as soon as practicable, and ordinarily within twenty-four hours after receipt of any samples make out a certificate in Form G and shall forward it in the case of samples of petroleum taken on board a ship to the Collector of Customs and in the case of other samples to the Officer submitting the sample.

(2) The testing officer shall, at the request of any person concerned, furnish him with a certified copy of the certificate in Form G on payment of a fee of one rupee.

162. *Fees for inspection and comparison.*—(1) The fee for each inspection of the Standard Test Apparatus shall be one rupee.

(2) The fee for comparing a privately owned test apparatus with the Standard Test Apparatus shall be fifty rupees.

163. *Fees for testing.*—(1) The fee for testing each sample of imported petroleum shall be five rupees:

Provided that the total amount of the fees chargeable under this rule shall not, in the case of any one ship, exceed Rs. 50.

(2) The fee for re-testing each sample under section 20 of the Act shall be five rupees. The fee shall be refunded if the original test is proved to be erroneous.

SCHEDULE I.

Licences vide Rule 113.

Article No.	Form of licence (See Schedule II).	Purpose for which granted.	Authority entitled to grant licence.	Period for which licence is valid.	Fee.	
1	2	3	4	5	6	
1	H	To import dangerous petroleum other than petroleum which can be used in an internal combustion engine, in quantities not exceeding 60 gallons at any one time.	The District Authority ..	Such period as the licensing authority deems necessary subject to a maximum of twelve months.	Re. 1.	
2	I	To store dangerous petroleum in quantity not exceeding 60 gallons.	The District Authority ..	Up till the 31st day of December of	Rs. 4.	
					FOR ARTICLES 3, 4, 5, 6 AND 7.	
					Non-dangerous petroleum.	
3	J	To store non-dangerous petroleum, otherwise than in bulk, in quantity not exceeding 5,000 gallons.	The District Authority ..		(*a*) When the quantity to be stored does not exceed five hundred gallons.	Rs. 8.
					(*b*) When the quantity to be stored exceeds five hundred but does not exceed one thousand gallons.	Rs. 12.
4	K	To store petroleum in a tank or tanks in connection with a pump outfit for fueling motor conveyances.	When the quantity to be stored at a time does not exceed 500 gallons. — The District Authority.		(*c*) When the quantity to be stored exceeds one thousand but does not exceed five thousand gallons.	Rs. 12 for the first one thousand gallons *plus* Rs. 3 for every additional one thousand gallons or part thereof.
			When the quantity to be stored at a time exceeds 500 gallons. — The Chief Inspector.		(*d*) When the quantity to be stored exceeds five thousand but does not exceed fifty thousand gallons.	Rs. 24 for the first five thousand gallons *plus* Rs. 5 for every additional one thousand gallons or part thereof.

5	L	To import dangerous petroleum and to store petroleum in installations.	The Chief Inspector	..	the year for which the licence is issued.	(e) When the quantity to be stored exceeds fifty thousand gallons. Rs. 275.
						Dangerous petroleum.
6	M	To import dangerous petroleum, otherwise than in tank, and to store otherwise than in bulk, dangerous petroleum, or non-dangerous petroleum in quantities exceeding 5,000 gallons or partly dangerous petroleum and partly non-dangerous petroleum.	The Chief Inspector	..		(f) When the quantity to be stored or imported and stored does not exceed five hundred gallons. Rs. 8.
7		Special forms as may be laid down by the Governor-General in Council to suit particular cases.	To import dangerous petroleum and to store petroleum (in cases not provided for in Articles 1, 2, 3, 4, 5 and (6).	The Chief Inspector	..	(g) When the quantity to be stored or imported and stored exceeds five hundred gallons. The same fees as those laid down for storage of non-dangerous petroleum.

SCHEDULE II.

Forms.

FORM A.

[*See Rule 8.*]

Declaration to be made by the master of a ship carrying petroleum before entering a port or by the ship's agent.

Name of ship.....

1 Nature of petroleum.	2 Total Quantity carried in the ship.	3 Quantity of petroleum to be landed in British India at—Name of port.	4 Remarks.
Dangerous petroleum which can be used in an internal combustion engine.			
Other dangerous petroleum ..			
Petroleum certified in accordance with rule 11 other than heavy petroleum.			
Heavy petroleum ..			
Other non-dangerous petroleum			
Total ..			

Dated *Signature of Master/Agent of ship.*

FORM B.

[See Rule 11.]

Certificate of imported petroleum.

Certified that $\frac{\text{sample}}{\text{samples}}$ of petroleum of the description given below for shipment per S.S. to $\frac{\text{has}}{\text{have}}$ been tested by me and that $\frac{\text{its}}{\text{their}}$ flashing $\frac{\text{point is}}{\text{points are}}$ as stated against the same.

Description of petroleum whether in cases, casks, drums, tanks, or in bulk.	Brand.	No. of cases, casks, drums, or tanks.	Quantity	Flashing-point.

Port of shipment..... Name of Shipper.....

Dated the day of 19 .

Signature and Designation of Testing Officer.

FORM C.

[*See Rule 13.*]

Certificate of storage accommodation.

I hereby declare that I propose to store the following consignments of dangerous/non-dangerous petroleum *ex* S.S.....arriving in.....on or about the.....19 at the storage tanks or sheds of which particulars are given in columns 1 and 2 of the statement below and I certify that the capacity shown as available in column 3 of that statement is available for the storage of the said petroleum, and that the said storage tanks and sheds are duly licensed for the storage of the petroleum in question.

Dated the.....19 .

Importer or Agent.

STATEMENT

1	2	3	4
Storage tanks or sheds.	Total capacity of each storage tank or shed.	Capacity available in each storage tank or shed.	Capacity to be utilized by present consignment in each storage tank or shed.
	Gallons.	Gallons.	Gallons.
Total (gallons) ..			

FORM D.

[*See Rule 112(2).*]

Application for the grant/renewal of a licence to store or to import and store petroleum.

	The replies to be written in this column.
1. Applicant's Name	
,, Calling	
,, Address	
NOTE.—In cases where the application is made on behalf of a company, the name and address of the company and the name of the manager or agents should be given.	
2. Situation of the premises where petroleum is to be stored—	
Province	
District	
Town or Village	
3. Petroleum proposed to be stored —	
Nature (*i.e.*, dangerous, non-dangerous or heavy petroleum)	
In bulk or otherwise than in bulk	
Quantity { In bulk .. .. / Not in bulk	
4. Form in which license is required ..	
5. Do the premises fulfil all the conditions endorsed on the form ?	
6. Petroleum already stored, if any, on the premises —	
Nature	
In bulk or otherwise than in bulk ..	
Quantity { In bulk .. .. / Not in bulk ..	

	The replies to be written in this column.
7. Dangerous petroleum proposed to be imported, if any—	
In bulk or otherwise than in bulk	
Quantity { In bulk .. .. / Not in bulk	
NOTE.—This application if it relates to a new installation or storage shed or if the applicant proposes any alterations in an existing installation or storage shed, must be accompanied by specifications and plans drawn to scale in duplicate. The plans should clearly indicate :—	
(*a*) the manner in which the conditions prescribed by these rules have been complied with ;	
(*b*) the premises to be licensed, the area of which shall be distinctively coloured or otherwise defined ;	
(*c*) the surroundings and all protected works ;	
(*d*) the position and capacity of all storage tanks, storage and filling sheds and the position of all other buildings and erections forming part of the installation ;	
(*e*) the areas reserved for dangerous petroleum, heavy petroleum and non-dangerous petroleum other than heavy petroleum ;	
(*f*) tank and other enclosures ;	
(*g*) all pumps, valves, filling and discharge points, vent pipes, etc.	
Remarks	

Signature of applicant.

Postal address of applicant..

Date of application

FORM E.

[*See Rule 157 (3).*]

Certificate of Apparatus.

.....Apparatus

Marked No.....

Maker's Name.....

Slide No.....

Thermometer No..... Oil Cup

No.....Water Bath

Cup No.....

The above apparatus including the thermometers having been submitted to me for verification with the Standard Test Apparatus has to-day been compared and found to agree with it within the prescribed limits.

The following corrections are necessary to the thermometer and barometer or aneroid readings:—

Thermometer No.....

No.....

Barometer or Aneroid No.....

Date.....

Reference.....

Countersigned. *Signature and Designation of the Officer Appointed under Section 15 (1) of the Petroleum Act, 1934.*

Chief Inspector of Explosives.

FORM F.

[*See Rule 158.*]

Register of Certificates of Apparatus.

Serial No.	Place at which the apparatus is intended to be used.	Number and date engraved on the apparatus.	Contents of certificate.	Date on which certificate will cease to be valid.

FORM G.

[*See Rule 161.*]

Certificate of tests of petroleum.

Owner .....

Marks .....

Test (1)

(2)

(3)

Average .....Thermometer correction.....

The sample is.....petroleum and (in the case of non-dangerous petroleum) has a flashing point of.....

Place.....

Date.....

Testing Officer.

FORM H.

(Article 1 of Schedule I.)

Licence to import dangerous petroleum other than petroleum which can be used in an internal combustion engine, in quantities not exceeding 60 gallons at any one time.

No.

Fee Re. 1.

Licence is hereby granted to to import dangerous petroleum other than petroleum which can be used in an internal combustion engine at the Port of subject to the provisions of the Petroleum Act, 1934, and the rules made thereunder and to the further conditions on the back of this licence.

This licence shall remain in force till the 19 .

The 19 .

District Authority.

Conditions of Licence.

1. Dangerous petroleum shall be imported in gas-tight tinned, galvanised or otherwise rust-proofed sheet iron or steel receptacles of not more than 60 gallons capacity and fitted with well made filling apertures and well fitting screw plugs, or with screw caps or other caps with metal air-tight undercaps. The receptacles shall have the following thickness of metal:—

	Not less than
Capacity not exceeding 2 gallons ..	.. 27 B. G.
Exceeding 2 but not exceeding 4 gallons ..	.. 22 B. G.
Exceeding 4 but not exceeding 30 gallons ..	.. 18 B. G.
Exceeding 30 but not exceeding 45 gallons	.. 17 B. G.
Exceeding 45 gallons .. .	.. 16 B. G.

2. The receptacles shall be so substantially constructed and secured as not to be liable, except under circumstances of gross negligence or extraordinary accident, to be broken or become defective, leaky or insecure in transit and shall have a stamped, embossed, painted or printed warning exhibiting in conspicuous characters the words "Petrol" or "Motor Spirit" or an equivalent warning of the dangerous nature of the petroleum.

3. An air space of not less than one-twentieth of its capacity shall be left in each receptacle at the time of filling.

FORM I.

(Article 2 of Schedule I.)

Licence to store dangerous petroleum in quantity not exceeding 60 gallons.

No.

Fee Rs. 4.

Licence is hereby granted to valid only for the storage of gallons of dangerous petroleum in the storage shed described below, subject to the provisions of the Petroleum Act, 1934, and the rules made thereunder and to the further conditions on the back of this licence.

This licence shall remain in force till the 31st day of December 19 .

The *19* .

District Authority.

Description of the storage shed referred to above.

Date of renewal.	Date of expiry.	Signature of Licensing Authority.

This licence is liable to be cancelled if the licensed premises when inspected are not found conforming to the description and conditions attached hereto and contravention of any of the rules and conditions under which this licence is granted is also punishable with fine which may extend to five hundred rupees for a first offence and which may extend to two thousand rupees for any subsequent offence.

Conditions of Licence.

1. Dangerous petroleum shall be stored only—

(*i*) in a storage shed constructed of suitable uninflammable material: the doors and windows may be of wood; or

(*ii*) in a properly ventilated iron bin of a design approved by the Chief Inspector, placed on private ground in the open air.

2. The storage shed shall not form part of, or be attached to, any building in which any person resides or works or where persons assemble for any purpose unless it is separated therefrom by a substantial floor or partition which is constructed of uninflammable material and has no openings therein.

3. The storage shed, if in any building, shall not be situated under any staircase or under any other means of exit likely to be required to be used for escape in case of fire.

4. Any two storage sheds or bins not more than twenty feet apart, shall be deemed to be one storage shed.

5. Dangerous petroleum other than paints, varnishes, lacquers and similar products shall not be kept in any receptacle other than the standard petrol tins of capacity not exceeding two gallons.

6. No alterations shall be carried out in the storage shed or bin without the previous sanction in writing of the licensing authority.

7. If the licensing authority calls upon the holder of a license, by a notice in writing, to execute any repairs to the storage shed, which may in the opinion of such authority, be necessary for the safety of the shed, the holder of the licence shall execute the repairs within such period not being less than one month from the date of receipt of the notice, as may be fixed by the notice.

8. No person shall repair or cause to be repaired any receptacle in which, to his knowledge, any dangerous petroleum is or has been kept until he has taken all reasonable precautions to ensure that the receptacle has been rendered free from dangerous petroleum and any inflammable vapour.

9. No person under the age of 15 years shall be employed in or shall enter the storage shed except in the presence of and under the immediate supervision of some grown up person.

10. All due precautions shall be taken for the prevention of unauthorised persons having access to any dangerous petroleum kept and to the vessel containing or having actually contained the same.

11. All due precautions shall be taken at all times for the prevention of accident by fire or explosion.

12. Every care shall be taken to prevent any dangerous petroleum escaping into any drain, sewer, harbour, river or water course.

13. Free access to the licensed premises shall be given at all reasonable times to any of the officers authorised under sections 13 and 14 of the Act and every facility shall be afforded to such officer for ascertaining that the rules and the conditions of this licence are duly observed.

14. Any accident, fire, or explosion occurring within the licensed premises, which is attended with loss of human life or serious injury to person or property shall be reported immediately to the nearest Magistrate or to the Officer-in-charge of the nearest Police-Station by telegraph or telephone.

15. All empty receptacles which have contained dangerous petroleum shall be kept securely closed unless they have been thoroughly cleaned and freed from petroleum and inflammable vapour.

FORM J.

(Article 3 of Schedule I.)

Licence to store non-dangerous petroleum, otherwise than in bulk, in quantity not exceeding 5,000 gallons.

No.

Fee Rs.

Licence is hereby granted to valid only for the storage of gallons of non-dangerous petroleum in the storage shed described below, subject to the provisions of the Petroleum Act, 1934, and the rules made thereunder and to the further conditions on the back of this licence.

*This licence shall remain in force till the 31st day of December 19 .

The 19 .

District Authority.

(Description and location of the storage shed referred to above.)

Date of renewal.	Date of expiry.	Signature of Licensing Authority.

This licence is liable to be cancelled if the licensed premises when inspected are not found conforming to the description and conditions attached hereto and contravention of any of the rules and conditions under which this licence is granted is also punishable with fine which may extend to five hundred rupees for a first offence and which may extend to two thousand rupees for any subsequent offence.

Conditions of Licence.

1. The petroleum shall be stored only in the storage shed which shall be constructed of suitable uninflammable material, but the beams, rafters, columns, windows and doors may be of wood. The building shall rest on foundation walls, the walls and floors being suitably finished to form a well or enclosure not more than 2 feet in depth and capable of receiving and retaining, in cases of accident or emergency, a volume not less than the maximum quantity of petroleum allowed in the building.

2. The storage shed shall not form part of, or be attached to, any building in which any person resides or works or where persons assemble for any purpose unless it is separated therefrom by a substantial floor or partition which is constructed of uninflammable material and has no openings therein.

3. The storage shed, if in any building, shall not be situated under any staircase or under any other means of exit likely to be required to be used for escape in case of fire.

4. The drum or other receptacle containing petroleum shall only be opened in the licensed premises and for the time necessary for drawing off the petroleum, and during such drawing off every reasonable precaution shall be adopted for preventing the escape of petroleum or the vapour therefrom.

5. No alterations shall be carried out in the storage shed without the previous sanction in writing of the licensing authority.

6. If the licensing authority calls upon the holder of a licence, by a notice in writing, to execute any repairs to the storage shed, which may, in the opinion of such authority, be necessary for the safety of the shed the holder of the licence shall execute the repairs within such period, not being less than one month from the date of receipt of the notice, as may be fixed by the notice.

7. Any two storage sheds not more than 15 feet apart shall be deemed to be one storage shed.

8. All due precautions shall be taken at all times for the prevention of accident by fire or explosion.

9. Every care shall be taken to prevent any petroleum escaping into any drain, sewer, harbour, river or water course.

10. Free access to the licensed premises shall be given at all reasonable times to any of the officers authorised under sections 13 and 14 of the Act and every facility shall be afforded to such officer for ascertaining that the rules and the conditions of this licence are duly observed.

11. Any accident, fire or explosion occurring within the licensed premises, which is attended with loss of human life or serious injury to person or property, shall be reported immediately to the nearest Magistrate or to the Officer-in-charge of the nearest Police Station by telegraph or telephone.

12. No person under the age of 15 years shall be employed in or shall enter the storage shed except in the presence of and under the immediate supervision of some grown up person.

13. Non-dangerous petroleum shall be packed in air-tight tins or drums of steel or iron or other receptacles not easily broken.

14. All due precautions shall be taken for the prevention of unauthorised persons having access to any petroleum kept and to any receptacles containing or having actually contained the same.

FORM K.

(Article 4 of Schedule I.)

Licence to store petroleum in a tank or tanks in connection with a pump outfit for fueling motor conveyances.

No.

Fee Rs.

Licence is hereby granted to valid only for the storage of gallons of petroleum in a tank (tanks) in the licensed premises described below and shown on the plan hereto attached subject to the provisions of the Petroleum Act, 1934, and the rules made thereunder and to the further conditions on the back of this licence.

*This licence shall be renewable for years save for contravention of the provisions of the Petroleum Act, 1934, and the rules framed thereunder.

This licence shall remain in force till the 31st day of December 19 .

[When the quantity to be stored at a time does not exceed 500 gallons.]

District Authority.

[When the quantity to be stored at a time exceeds 500 gallons.]

Chief Inspector of Explosives in India.

The *19* .

Plan No. , dated

Decription of the licensed premises referred to above.

The licensed premises are situated and consist of a gas-tight tank (tanks) of a capacity of gallons sunk underground.

Date of renewal.	Date of expiry.	Signature of Licensing Authority.

*Not applicable to kerbside outfits.

Conditions of Licence.

1. The petroleum shall be stored in a gas-tight metal tank (tanks) of a capacity of gallons sunk completely underground in the position shown on the plan attached hereto and each placed in a masonry or concrete pit, the tank being packed round with sand, earth or clay so that no air space is left between the tank and the masonry or concrete pit and the tank is not visible. Such masonry or concrete pit shall not be obligatory if the tank is a welded one tested up to a pressure of 3 lbs. per square inch and is buried and is on private, leased or rented land away from public traffic. The space over the buried tanks must not be used for any purpose.

2. There shall be no openings in the tank (tanks) other than those necessary for the introduction or removal of the petroleum or for ventilating or dipping the tank (tanks). The filling and dipping pipes shall be carried down nearly to the bottom of the tank (tanks).

3. The tank (tanks) shall be fitted with a vent pipe leading into the open air. The vent pipe shall be securely supported and shall be not less than 12 feet in height. The upper opening shall be covered with fine copper or other non-corroding metal wire gauze or mesh not less than 28 to the linear inch and fitted with a hood or the upper opening shall be fitted with an inlet valve and an exhaust valve.

4. No pump or tank shall be erected inside a building and, if prior to the introduction of these rules any tank is installed inside a building, it shall only be filled from a tank wagon through an underground filling pipe having a filling point in the open air at a distance of not less than 12 feet from the building.

5. No alteration or change by replacements of pumps or tank shall be effected without the previous sanction in writing of the licensing authority. Such alterations or changes so sanctioned shall be shown on an amended plan to be attached to this licence.

6. The petroleum shall enter the tank (tanks) 'under seal' and shall not be supplied to the tank between the hours of sunset and sunrise except by a motor tank wagon of a type approved by the Chief Inspector for the purpose and with the approval in writing of the licensing authority.

NOTE.—A pipe supplying liquid to a tank is 'Under-seal' to that tank if it is screwed to the tank or otherwise attached so that no liquid or vapour can escape into the air.

7. No petroleum shall be removed from the tank (tanks) except by means of the pump (pumps) at the position marked on the plan hereto attached. The pump (pumps) shall together with its connections and fittings be so constructed and maintained as to be gas and petroleum-tight. The pipe connections between the tank and the pump shall be placed underground.

8. For the purpose of charging the tanks of motor vehicles the petroleum shall only be supplied by being—

(*a*) pumped through strong metal piping by means of approved pumps into above-ground measuring tanks of a capacity not exceeding 30 gallons, fixed in approved positions, and run thence through sound hose, fitted with secure self-closing cock and nozzle, into the tanks of motor vehicles, or

(*b*) pumped through strong metal piping by means of approved pumps into an above-ground service tank of approved capacity, fixed in an approved position, and run thence through strong metal piping into measuring tanks of a capacity not exceeding 30 gallons fixed in approved positions and thence through sound hose, fitted with secure self-closing cock and nozzle, into the tanks of motor vehicles, or

(*c*) pumped by means of approved measuring pumps, fixed in approved positions, through sound hose fitted with secure tap and nozzle, into the tanks of motor vehicles.

9. Petroleum may be supplied to a motor vehicle between the hours of sunset and sunrise from the pump provided the lights of the vehicle receiving the petroleum are extinguished and the pump and the vehicle are illuminated by electric light or failing this by some other form of lighting, provided that no light capable of igniting inflammable vapour is situated or brought within a distance of twelve feet of the pump or vehicle receiving the petroleum.

10. Except when absolutely necessary for the purposes of condition 11 or for testing the accuracy of the pump's discharge by means of a standard capacity measure petroleum shall, on no account, be filled from the tank or pump into any receptacle other than that clamped or fitted to a motor vehicle.

11. The tank (tanks), before being repaired, shall be cleared of all petroleum and of all inflammable vapours. When a tank in position is open for cleaning or repairs no lamps of any description either ordinary, electric, electric torches or electric cables or electric fans shall be brought near the manhole of the tank until the tank has been certified in writing to be 'gas free' by a qualified Chemist or Engineer (the inside of the tank may be lighted by the use of mirrors).

12. If the licensing authority calls upon the holder of a licence by a notice in writing to execute any repairs to the licensed premises which may, in the opinion of such authority, be necessary for the safety of the said premises, the holder of the licence shall execute the repairs within such period, not being less than one month from the date of receipt of the notice as may be fixed by the notice.

13. This licence shall be held to cover the use of a portable kerbside pump outfit for a period of not more than one month in the place of the licensed permanent outfit in the event of the latter being out of

order, provided notice in writing is given to the licensing authority before the portable pump is taken into use, and the conditions of this licence which apply to a portable pump are observed. No petroleum shall be allowed above ground (except that actually in the pump) in all cases where the underground tanks can be used in connection with the portable pump by making a temporary connection from the portable pump to the underground tank.

14. In cases where portable pumps are used not more than two barrels of petroleum in reserve shall be kept within 20 feet of the pump or on public property nearby.

15. All due precautions shall be taken at all times for the prevention of unauthorised persons from having access to the petroleum or to the vessels containing or having actually contained the same.

16. No artificial light capable of igniting inflammable vapour shall at any time be present in the immediate vicinity of the tank wagon during the transfer of the petroleum to the tank and no person engaged in such transfer shall smoke. When the underground tank is filled with petroleum from barrels no such light shall be allowed within a distance of 20 feet from the barrels.

Petroleum shall not be placed in any motor vehicle while the engine is running and persons in and engaged in connection with such motor vehicle shall not be permitted to smoke.

17. Every person managing or employed on or in connection with the licensed premises shall abstain from any act whatever which tends to cause fire or explosion and which is not reasonably necessary and, to the best of his ability shall prevent any other person from doing such act.

18. Every care shall be taken to prevent any petroleum escaping into any drain or sewer.

19. Free access to the licensed premises shall be given at all reasonable times to any of the officers authorised under sections 13 and 14 of the Act and every facility shall be afforded to such officer for ascertaining that the rules and the conditions of this licence are duly observed.

20. Any accident, fire or explosion occurring within the licensed premises, which is attended with loss of human life or serious injury to person or property shall be reported immediately to the nearest Magistrate or to the Officer-in-charge of the nearest Police Station by telegraph or telephone.

21. No person under the age of 15 years shall be employed in or shall enter the licensed premises except in the presence of and under the immediate supervision of some grown up person.

22. The licensee shall provide for each pump, whether kerbside or portable, a minimum of two tins or drums of sand which shall be kept ready for extinguishing fires.

FORM L.

(Article 5 of Schedule I.)

Licence to import dangerous petroleum and to store petroleum in installations.

No.

Fee Rs.

Licence is hereby granted to valid only for the importation of gallons of dangerous petroleum and for the storage of *gallons of petroleum in the place described below and shown on the plan attached hereto subject to the provisions of the Petroleum Act, 1934, and the rules made thereunder and to the further conditions on the back of this licence.

This licence shall remain in force till the 31st day of December 19 .

	Gallons.
*Dangerous petroleum in bulk	
Dangerous petroleum otherwise than in bulk	
Non-dangerous petroleum in bulk	
Non-dangerous petroleum otherwise than in bulk	
Total ..	

The 19

Chief Inspector of Explosives in India.

Plan No. , dated

Description of the place referred to above.

Date of renewal.	Date of expiry.	Signature of licensing authority.

This licence is liable to be cancelled if the licensed premises when inspected are not found conforming to the description and conditions attached hereto and contravention of any of the rules and conditions under which this licence is granted is also punishable with fine which may extend to five hundred rupees for a first offence and which may extend to two thousand rupees for any subsequent offence.

Conditions of Licence.

1. All due precautions shall be taken at all times for the prevention of accident by fire or explosion.

2. No person under the age of 15 years shall be employed in or shall enter the installation except in the presence of and under the immediate supervision of some grown up person.

3. Free access to the licensed premises shall be given at all reasonable times to any of the officers authorised under sections 13 and 14 of the Act and every facility shall be afforded to such officer for ascertaining that the rules and the conditions of this licence are duly observed.

4. Any accident, fire or explosion occurring within the area specified in the licence, which is attended with loss of human life or serious injury to person or property shall be reported immediately to the nearest Magistrate or to the Officer-in-charge of the nearest Police Station by telegraph or telephone.

5 No alterations shall be carried out in the installation without the previous sanction in writing of the licensing authority. Such alterations so sanctioned shall be shown on an amended plan to be attached to this licence.

6. If the licensing authority calls upon the holder of a licence, by a notice in writing, to execute any repairs to the licensed premises, which may, in the opinion of such authority, be necessary for the safety of the said premises, the holder of the licence shall execute the repairs within such period, not being less than one month from the date of receipt of the notice as may be fixed by the notice.

7. The responsible agent or supervisor referred to in rule 91 shall not allow any person to enter a tank, which has contained petroleum, unless—

(*a*) such person wears a safety helmet of a description approved by the Chief Inspector, or

(*b*) (*i*) the responsible agent or supervisor has certified in writing, as the result of an examination of the tank by himself or by some other competent person, that the atmosphere in the tank is fit for persons to enter, and

(*ii*) at least one safety helmet of a pattern approved by the Chief Inspector shall have been kept ready for instant use at the manhole of the tank which is being cleaned or repaired.

8. No work, involving the use of fire, welding or hot rivetting, shall be performed in or on any tank until the tank has been certified in the manner laid down in clause (*b*) of condition 7 to be free from petroleum vapour. When any water is pumped into or withdrawn from the tank no further work of the above description shall be done until the tank has been re-tested and a fresh certificate issued. When a tank is open for cleaning or repairs no lamps of any description either ordinary, electric, electric torches or electric cables or fans other than of a flame-proof type as defined by the British Engineering Standards Association in their Specification No. 229 shall be brought near the tank.

9. No person shall repair or cause to be repaired any receptacle or pipe in which to his knowledge, any petroleum is or has been kept until he has taken all reasonable precautions to ensure that the receptacle or pipe has been rendered free from petroleum and any inflammable vapour:

Provided that this condition shall not be deemed to prohibit the usual soldering operations connected with the filling and despatching of petroleum receptacles.

10. (*a*) Dangerous petroleum otherwise than in bulk shall be imported and/or stored in gas-tight tinned, galvanised or otherwise rust-proofed sheet iron or steel receptacles of not more than 65 gallons capacity and fitted with well made filling apertures and well-fitting screw plugs, or with screw caps or other caps with metal air-tight under caps. The receptacles shall be of a type approved in writing by the Chief Inspector and shall have the following thickness of metal:—

	Not less than
Capacity not exceeding 2 gallons	.. 27 B.G.
Exceeding 2 but not exceeding 4 gallons	.. 22 B.G.
Exceeding 4 but not exceeding 30 gallons	.. 18 B.G.
Exceeding 30 but not exceeding 45 gallons	.. 17 B.G.
Exceeding 45 gallons	.. 16 B.G.

(*b*) All receptacles shall be kept in proper repair and shall be available for inspection at any time by the Chief Inspector or an Inspector.

(*c*) All receptacles shall be so substantially constructed and secured as not to be liable, except under circumstances of gross negligence or extraordinary accident to be broken or become defective, leaky or insecure in transit and shall have a stamped, embossed, painted or printed warning exhibiting in conspicuous characters the words "Petrol" or "Motor Spirit" or an equivalent warning of the dangerous nature of the petroleum.

(*d*) An air-space of not less than one-twentieth of its capacity shall be left in each drum or other receptacles containing dangerous petroleum.

11. Petroleum shall be kept only in the storage tanks and storage and filling sheds or other approved places within the installation specified for the purpose on the plan attached hereto.

12. Storage or filling sheds shall be constructed of suitable uninflammable material. The building shall rest on foundation walls and shall be surrounded by a wall or embankment of substantial construction or the walls and floor shall be suitably finished to form a well or enclosure not more than two feet deep. A combination of these methods is permissible. The enclosure or well thus formed shall be of sufficient capacity to contain the total quantity of petroleum liable at any time to be present in the building and shall be so constructed and maintained as to prevent the escape therefrom of any petroleum in the form of liquid whether under the action of fire or otherwise. In the case of dangerous petroleum or partly dangerous and partly non-dangerous petroleum the enclosure or well shall be

capable of receiving and retaining a volume not less than 5 per cent. in excess of the maximum quantity allowed in the building. The wells and enclosures must be kept clean and free from any accumulation of inflammable liquids.

13. The tank or tanks shall be supported on an approved foundation and shall be surrounded by a wall or embankment of substantial construction, or shall be partially sunk in an excavation. The enclosure thus formed shall contain only one of the following classes of petroleum, shall be of dimensions sufficient to contain the quantity of petroleum specified under the class to be stored and shall be so constructed and maintained as to prevent the escape therefrom of any petroleum in the form of liquid, whether under the action of fire or otherwise—

(*a*) *Dangerous petroleum*—10 per cent. more petroleum than the tank or tanks are capable of containing;

(*b*) *Non-dangerous petroleum other than heavy petroleum*—the amount of petroleum the tank or tanks are capable of containing;

(*c*) *Heavy petroleum*—the amount of petroleum the largest tank in the enclosure is capable of containing:

Provided that heavy petroleum may be stored in the same enclosure as non-dangerous petroleum other than heavy petroleum if the dimension under (*b*) above is observed:

Provided also that the Chief Inspector may limit the number of tanks in an enclosure where in his opinion there are circumstances that warrant such limitation. Except for the necessary pipes and valves the space within an enclosure and not occupied by the tank or tanks, shall be kept entirely clear and unoccupied. Alternatively gas-tight metal tanks may be sunk completely underground the tanks being packed round with sand, earth or clay, so that no air space is left below ground level and the tank is not visible. Tanks so buried shall not be required to maintain the safety distances laid down in condition 18 but the space over the buried tanks must not be used for any purpose. The filling and dipping pipes in an underground tank shall be carried down to the bottom of the tank.

14. Every care shall be taken to prevent any petroleum escaping into any drain, sewer, harbour, river or water course and enclosures or wells must not be permanently connected with any drain or sewer.

15. Pumps shall be placed only in the positions shown on the plan attached hereto and they shall together with all connections and fittings be so constructed and maintained as to prevent leakage of petroleum.

16. All tanks shall be fitted with a vent pipe leading into the open air, the open end being covered with fine copper (or other non-corroding metal) wire gauze of mesh not less than 28 to the linear inch, and

fitted with a hood or the open end shall be fitted with an approved relief valve or other approved means provided to prevent dangerous internal or external pressures being produced.

17. Cast iron valves are not permitted on any tank and all valves in an installation must be permanently marked in a manner clearly indicating the direction of opening and shutting the valve.

18. The following safety distances shall be observed:

(*N.B.*—The distances will be required to be kept clear not merely on the first establishment of the premises but during the continuance of the licence.)

A distance of not less than 100 feet shall be kept clear between a storage tank and any other storage tank or between such a storage tank and a storage or filling shed, the distance being measured between the nearest points of the perimeters of the storage tanks or storage or filling sheds, as the case may be.

A distance of not less than 150 feet shall be kept clear between any storage tank or storage or filling shed and any protected work:

Provided that—

(*i*) Where the quantity of dangerous petroleum or partly dangerous and partly non-dangerous petroleum not in bulk to be stored in a storage shed does not exceed 50,000 gallons the following reduced distances may be kept clear between the shed or enclosure wall and any other building forming part of the installation, any protected work or any storage tank containing non-dangerous petroleum having a capacity not exceeding 50,000 gallons:—

	Feet.
Not exceeding 1,000 gallons	20
Exceeding 1,000 gallons but not exceeding 10,000 gallons ..	30
Exceeding 10,000 gallons but not exceeding 20,000 gallons	40
Exceeding 20,000 gallons but not exceeding 30,000 gallons	50
Exceeding 30,000 gallons but not exceeding 40,000 gallons	60
Exceeding 40,000 gallons but not exceeding 50,000 gallons	70

(*ii*) When a storage tank containing non-dangerous petroleum has a capacity not exceeding 100,000 gallons, a distance of not less than 50 feet may be kept clear between it and another such tank of similar or less capacity or between it and a storage or filling shed containing non-dangerous petroleum.

Such a storage tank and storage or filling shed may, where the total quantity stored does not exceed 200,000 gallons, keep a distance of not less than 50 feet clear between the enclosure wall or embankment and any protected works.

(*iii*) When a storage tank containing non-dangerous petroleum has a capacity not exceeding 50,000 gallons, a distance of—

(*a*) for horizontal tanks, not less than one-third;

(*b*) for perpendicular tanks, not less than one-half, the height of the tank may be kept clear between it and another such tank or between such a tank and a storage or filling shed wherein non-dangerous petroleum is stored in quantity not exceeding 50,000 gallons.

Such a storage tank and storage or filling shed may, where the total quantity stored does not exceed 100,000 gallons, keep a distance of not less than 20 feet clear between the enclosure wall or embankment and any protected works.

(*iv*) In the case of heavy petroleum a distance of not less than 20 feet may be kept clear between one storage tank and another such tank or between a storage tank and a storage or filling shed containing such petroleum and a distance of not less than 50 feet shall be kept clear between such storage tank or filling or storage shed and any protected works. When the total quantity stored in such storage tank and storage or filling shed does not exceed 100,000 gallons, half the distances given in clause (*iii*) for the like quantity of non-dangerous petroleum other than heavy petroleum may be observed.

19. The distances specified in condition 18 may be amended by the licensing authority in cases where screen walls are provided or other special precautions taken or where there are special circumstances that, in his opinion, warrant the alteration.

20. Notwithstanding anything herein to the contrary when petroleum is stored in an installation at or near wells, pumping stations or refineries, the concessions in provisos (*i*), (*ii*), (*iii*) and (*iv*) of condition 18 shall not apply and no storage tank, the capacity of which exceeds 50,000 gallons or any storage or filling shed shall be placed nearer than 300 feet to any still, boiler, furnace or fire. In such an installation all tanks shall be situated on a compact area under a single control and enclosed or capable of being enclosed by one continuous fence on which there shall be no protected works.

21. No more tins shall be allowed in the filling and soldering sheds at any one time than are necessary for expeditious working.

22. All empty receptacles which have contained dangerous petroleum shall be kept securely closed unless they have been thoroughly cleaned and freed from petroleum and inflammable vapour.

FORM M.

(Article 6 of Schedule I.)

Licence to import dangerous petroleum, otherwise than in bulk, and to store, otherwise than in bulk, dangerous petroleum, or non-dangerous petroleum in quantities exceeding 5,000 gallons, or partly dangerous petroleum and partly non-dangerous petroleum.

No.

Fee Rs.

Licence is hereby granted to valid only for the importation of gallons of dangerous petroleum and for the storage of gallons of dangerous petroleum and gallons of non-dangerous petroleum in the storage shed described below and shown on the plan attached hereto, subject to the provisions of the Petroleum Act, 1934, and the rules made thereunder and to the further conditions on the back of this licence.

This licence shall remain in force till the 31st day of December 19 .

The *19* .

Chief Inspector of Explosives in India.

Plan No. dated .

Description of the storage shed referred to above.

Date of renewal.	Date of expiry.	Signature of Licensing Authority.

This licence is liable to be cancelled if the licensed premises when inspected are not found conforming to the description and conditions attached hereto and contravention of any of the rules and conditions under which this licence is granted is also punishable with fine which may extend to five hundred rupees for a first offence and which may extend to two thousand rupees for any subsequent offence.

Conditions of licence.

1. The petroleum shall be stored only in the storage shed which shall be constructed of suitable uninflammable material provided that, when only non-dangerous petroleum is stored, the beams, rafters, columns, windows, and doors may be of wood. The building shall rest on foundation walls and shall be surrounded by a wall or embankment of substantial construction or the walls and floor shall be suitably finished to form a well or enclosure not more than two feet deep. A combination of these methods is permissible. The enclosure or well thus formed shall be of sufficient capacity to contain the total quantity of petroleum liable at any time to be present in the building and shall be so constructed and maintained as to prevent the escape therefrom of any petroleum in the form of liquid whether under the action of fire or otherwise. In the case of dangerous petroleum or partly dangerous and partly non-dangerous petroleum the enclosure or well shall be capable of receiving and retaining a volume not less than 5 per cent. in excess of the maximum quantity allowed in the building. The wells and enclosures must be kept clean and free from any accumulation of inflammable liquids.

2. No person shall repair or cause to be repaired any receptacle in which, to his knowledge, any petroleum is or has been kept until he has taken all reasonable precautions to ensure that the receptacle has been rendered free from petroleum and any inflammable vapour.

3. If the licensing authority calls upon the holder of a licence, by a notice in writing, to execute any repairs to the licensed premises which may, in the opinion of such authority, be necessary for the safety of the premises, the holder of the licence shall execute the repairs within such period, not being less than one month from the date of receipt of the notice, as may be fixed by the notice.

4. No alteration shall be carried out in the licensed premises without the previous sanction in writing of the licensing authority. Such alterations, so sanctioned, shall be shown on an amended plan to be attached to this license.

5.* The following distances shall be kept clear between protected works and a storage shed or an enclosure wall used for the storage of dangerous petroleum or partly dangerous and partly non-dangerous petroleum.

Quantity to be stored.	*Distances to be kept clear.*
	Feet.
Not exceeding 500 gallons	20
Exceeding 500 gallons but not exceeding 1,000 gallons ..	25
Exceeding 1,000 gallons but not exceeding 5,000 gallons ..	30
Exceeding 5,000 gallons but not exceeding 20,000 gallons ..	40
Exceeding 20,000 gallons but not exceeding 30,000 gallons ..	50
Exceeding 30,000 gallons but not exceeding 40,000 gallons ..	60
Exceeding 40,000 gallons but not exceeding 50,000 gallons ..	70
Over 50,000 gallons	100

*The distances will be required to be kept clear not merely on the first establishmen t of the premises but during the continuance of the licence.

6.* The following distances shall be kept clear between protected works and a storage shed or an enclosure wall used for the storage of non-dangerous petroleum only:—

Quantity to be stored.	*Distances to be kept clear.*
	Feet.
Exceeding 5,000 gallons but not exceeding 10,000 gallons ..	15
Exceeding 10,000 gallons but not exceeding 50,000 gallons ..	20
Over 50,000 gallons	30

7. The distances specified in conditions 6 and 7 may be reduced by the licensing authority in cases where screen walls are provided or other special precautions taken or where there are special circumstances that, in his opinion, warrant the reduction.

8. The drum or other receptacle containing petroleum shall only be opened in the licensed premises and for the time necessary for drawing off the petroleum, and during such drawing off every reasonable precaution shall be adopted for preventing the escape of petroleum or the vapour therefrom.

9. No person under the age of 15 years shall be employed in or shall enter the licensed premises except in the presence of and under the immediate supervision of some grown up person.

10. All due precautions shall be taken at all times for the prevention of accident by fire or explosion.

11. Every care shall be taken to prevent any petroleum escaping into any drain, sewer, harbour, river or water course.

12. All due precautions shall be taken for the prevention of unauthorised persons having access to any petroleum kept and to any receptacles containing or having actually contained the same.

13. Free access to the licensed premises shall be given at all reasonable times to any of the officers authorised under sections 13 and 14 of the Act and every facility shall be afforded to such officer for ascertaining that the rules and the conditions of this license are duly observed.

14. Any accident, fire or explosion occurring within the licensed premises, which is attended with loss of human life or serious injury to person or property shall be reported immediately to the nearest Magistrate or to the Officer-in-Charge of the nearest Police Station by telegraph or telephone.

15. All empty receptacles which have contained dangerous petroleum shall be kept securely closed unless they have been thoroughly cleaned and freed from petroleum and inflammable vapour.

16. (*a*) Dangerous petroleum shall be imported and/or stored in gas-tight tinned, galvanised or otherwise rust-proofed, sheet iron or steel receptacles of not more than 65 gallons capacity and fitted with well made filling apertures and well-fitting screw plugs, or with

*The distances will be required to be kept clear not merely on the first establishment of the premises but during the continuance of the licence.

screw caps or other caps with metal air-tight under caps. The receptacles shall be of a type approved in writing by the Chief Inspector and shall have the following thickness of metal—

	Not less than
Capacity not exceeding 2 gallons ..	.. 27 B.G.
Exceeding 2 but not exceeding 4 gallons ..	.. 22 B.G.
Exceeding 4 but not exceeding 30 gallons	.. 18 B.G.
Exceeding 30 but not exceeding 45 gallons	.. 17 B.G.
Exceeding 45 gallons	.. 16 B.G.

(*b*) All receptacles shall be kept in proper repair and shall be available for inspection at any time by the Chief Inspector or an Inspector.

(*c*) All receptacles shall be so substantially constructed and secured as not to be liable, except under circumstances of gross negligence or extraordinary accident, to be broken or become defective, leaky or insecure in transit and shall have a stamped, embossed, painted or printed warning exhibiting in conspicuous characters the words "Petrol" or "Motor spirit" or an equivalent warning of the dangerous nature of the petroleum.

(*d*) An air-space of not less than one-twentieth of its capacity shall be left in each drum or other receptacle containing dangerous petroleum.

17. Non-dangerous petroleum shall be packed in air-tight tins or drums of steel or iron or other receptacles not easily broken.

SCHEDULE III.

METHODS OF TESTING PETROLEUM.

Determination of Flashing-Point.

[*See Rules 156 and 159.*]

I. APPARATUS TO BE USED.

The flashing-point of petroleum and petroleum mixtures which are fluid at 50° F. and which flash not above 120° F. shall be determined by the Abel apparatus as hereinafter defined.

The flashing-point of petroleum and petroleum mixtures which are solid at 50°F. and which flash not above 120°F. shall be determined by the Abel apparatus, the test being modified as hereinafter described.

The flashing-point of petroleum and petroleum mixtures which flash above 120°F. shall be determined by the Pensky-Martens apparatus as hereinfater defined.

II. PREPARING THE SAMPLES FOR TEST.

About ten fluid ounces of the sample, sufficient for three tests, should be transferred from the bottle into which the sample has been drawn to a pint flask or bottle, which should be immersed in water artificially cooled until a thermometer, introduced into the sample indicates a temperature not exceeding 50°F.

III. (1) ABBEL APPARATUS.

The apparatus to be employed shall be the Abel petroleum testing apparatus modified by having an oil cup provided with a stirrer. It shall be constructed to the dimensions herein specified within the limits of accuracy prescribed by the tolerances set forth below.

Oil Cup.—The oil cup consists of a cylindrical vessel open at the top and fitted on the outside with a flat circular flange projecting at right angles.

Within the cup, fixed through the wall and silver soldered or brazed in place, there is a gauge consisting of a piece of wire bent upwards and terminating in a point.

Material.—Brass or gun-metal.

	Dimension.	Tolerance. In.
Cup, wall and bottom thickness	17 I.W.G. ..	—
Cup, internal diameter	2 in.	±0·05
Cup, internal depth	2·2 in. ..	±0·05
Flange, thickness	17 I.W.G. ..	—
Flange, width	0·5 in. ..	±0·05
Flange, distance of upper side from top edge of cup ..	0·375 in. ..	±0·05
Gauge, thickness, not less than	10 I.W.G.	—
Gauge, distance of point from level of upper edge of cup	0·7 in. ..	±0·005

Cover.—The cup is provided with a close-fitting cover with a downward projecting rim barely reaching the flange on the cup. The

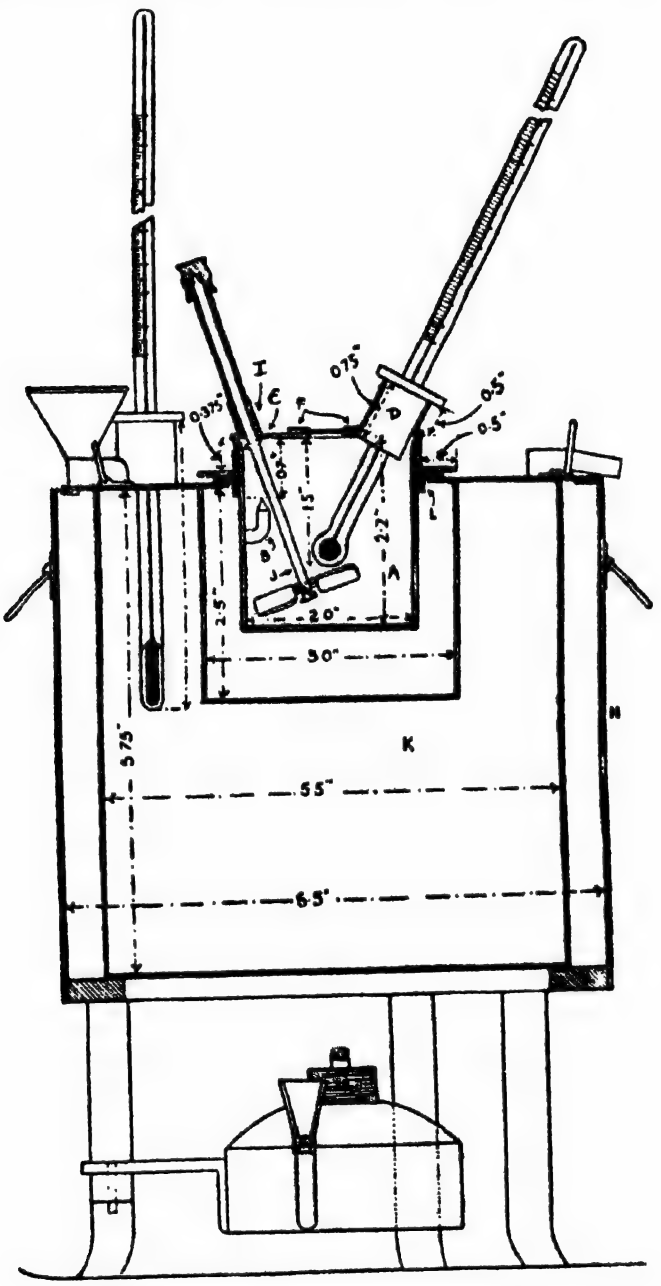

ABEL FLASH-POINT APPARATUS.

downward projecting ring is made solid with the top or silver soldered or brazed in place. Upon the cover are mounted a thermometer socket, trunnions to support an oil test-lamp, a pair of guides in which

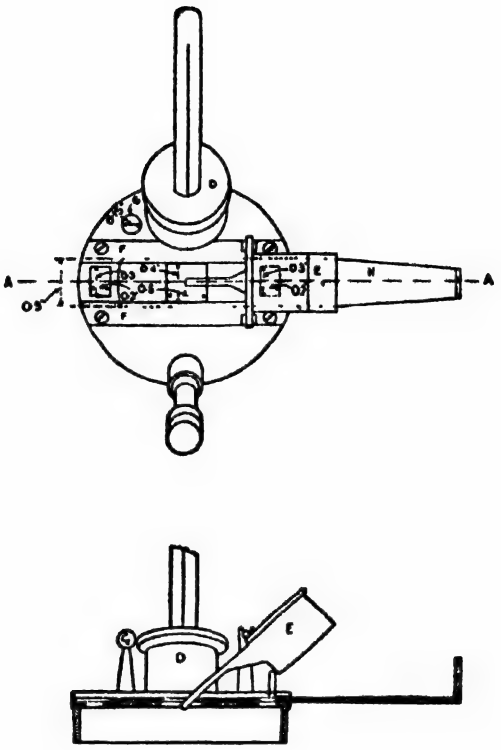

SECTION ON A.

COVER OF ABEL FLASH-POINT APPARATUS.

(SLIDE OPEN.)

a slide moves, and a white bead. The top of the cover is pierced by three rectangular holes symmetrically placed on a diameter, one in the centre and the other two as close as practicable to the inner sides of the cover-rim and opposite each other. These three holes are covered or uncovered by means of a slide moving in suitably disposed guides. The slide has two perforations, one corresponding in all particulars to the centre hole in the cover and the other to one of the holes at the side. The movement of the slide is restricted by suitable stops, and its length and the disposition of the holes are such, that at the outer extremity of the movement of the slide, the holes in the cover are simultaneously just completely opened and at the inner extremity of the movement of the slide they are completely closed.

The trunnions supporting the test-lamp are fixed on the top of the guides and the lamp is mounted in the trunnions so that it is free to oscillate. The lamp is provided with a jet to contain a wick and is so arranged that when the slide is moved so as to uncover the holes, the oscillating lamp is caught by a pin fixed in the slide and tilted over the central hole in such a way that the lower edge of the cover

bisects the circle formed by the bore of the jet when in the lowest position. The flame then occupies a central position within the hole in both directions.

A suitably mounted gas-jet may be substituted for the lamp.

	Dimension.	Tolerance. in.
Cover, thickness	0·05 in.	±0·015
Cover, central hole, length (in direction of slide)	0·5 in.	±0·005
Cover, central hole, width	0·4 in.	±0·005
Cover, peripheral holes, length (in direction of slide)	0·2 in.	±0·005
Cover, peripheral holes, width	0·3 in.	±0·005
Slide, thickness	20 I.W.G.	—
Slide, width of upper surface	0·5 in.	+0·01 (excess only)
Lamp, overall length of jet	Approx. 0·6 in.	To suit the requirements for the position of the jet when tilted.
Lamp, bore of jet at end	0·0625 in.	±0·005
Bead, diameter	0·15 in.	±0·01
Thermometer Socket :		
Internal diameter	0·6 in.	±0·01
Length of short side measured from under surface of cover	Approx. 0·5 in.	—
Length of long side measured from under surface of cover	Approx. 0·75 in.	—
Distance of centre of socket from centre of cover measured on the under side	Approx. 0·7 in.	—
These dimensions are subject to the correct placing of the thermometer when in position.		
Vertical depth of lowest part of thermometer below centre of under side of cover	1·5 in.	±0·1

The thermometer socket is in the form of a split tube, mounted on a diameter at right angles to the diameter through the centre of the holes, and fitted at such an angle as to bring the bulb of the thermometer, when in place, vertically below the centre of the cover and at the correct distance from it.

A white bead, the dimensions of which represent the size of test flame to be used, is mounted in a visible position on the cover.

Materials.—All parts excepting bead, brass or gun-metal. Bead, ivory or other suitable material.

Cover fitted with Stirrer.—Provision may be made in the cover for the reception of a stirrer which projects into the oil cup, for use with viscous materials only.

A bush is mounted on the cover in a position diametrically opposite the thermometer mounting, and its length is such and it is set at such an angle that the stirrer rod clears the oil-level gauge and the blades operate below the level of, and without fouling, the thermometer bulb. The bush is placed as near as practicable to the outer edge of the cover.

	Dimension.	Tolerance.
		in.
Stem, length, overall	4 in.	±0·1
Stem, length, lower end to point of attachment of blades	Approx. 0·1 in.	—
Stem, length, lower end to upper surface of collar	1·9 in.	±0·1
Stem, length, upper surface of collar to lower end of thread	2 in.	±0·1
Stem, diameter	Approx. 0·125 in.	
Stem, diameter of collar	Approx. 0·25 in.	—
Stem, thread	7 B.A.	—
Blades, thickness	17 I.W.G.	—
Blades, length excluding root	0·5 in.	±0·01
Blades, breadth (all corners of blades rounded)	$\frac{5}{16}$ in. (0·3125 in.)	±0·01
Blades, angle	Approx. 45°	—
Sleeve, length	To suit stem, giving free rotation with no appreciable vertical play when screwed home.	
Diameter of bore	Sliding fit on stem	—
Diameter of collar	Approx. 0·25 in.	—

The stirrer consists of a round stem having four blades or vanes silver soldered in place at one end. A collar is fixed on the stem so that when the stem is inserted into the bush from below, it is arrested at a position such that the correct length protrudes into the oil cup. The top end of the stem is reduced and screwed.

A long sleeve having an internally screwed, knurled knob soldered to its upper end, is passed over the upper end of the stem and screwed home. The length of the sleeve is such that flat-faced collar at its lower end just comes into contact with the upper end of the bush, leaving the stirrer free to rotate without appreciable vertical play.

A flat-headed cylindrical plug is provided for insertion in the bush when the stirrer is not in use.

Material.—Brass or gun-metal.

Heating Vessel.—The heating vessel or bath consists of two flat-bottomed cylindrical copper vessels placed coaxially one inside the other and soldered at their tops to a flat copper ring, greater in outside diameter than the larger vessel and of smaller inside diameter than the

smaller vessel. The space between the two vessels is thus totally enclosed and is used as a water jacket.

	Dimension.	Tolerance.
		in.
Inner vessel, thickness	24 I.W.G.	—
Inner vessel, internal diameter	3 in.	±0·05
Inner vessel, internal depth	2·5 in.	±0·05
Outer vessel, thickness, not less than	24 I.W.G.	—
Outer vessel, internal diameter	5·5 in.	±0·1
Outer vessel, internal depth	5·75 in.	±0·1
Top plate, thickness, not less than	20 I.W.G.	—
Top plate, outer flange projection	0·375 in.	±0·1
Top plate, diameter of central hole	To suit ebonite or fibre ring. Clearance not to exceed 0·1 in.	
Ebonite or fibre ring, internal diameter	Easy fit on oil cup	—
Ebonite or fibre ring, external diameter of flange	2·75 in.	±0·02
Ebonite or fibre ring, overall depth of spigot	0·25 in.	±0·02
Ebonite or fibre ring, thickness, flange and spigot	0·08 in.	±0·005
Ebonite or fibre ring, screws, C.S.	8 B.A. × 0·15 in.	—
Thermometer socket, internal diameter	0·6 in.	±0·01
Thermometer socket, height from top of plate	0·75 in.	±0·05

An ebonite or fibre ring of right-angle section is fitted into the hole in the centre of the flat ring forming the top of the bath and, when the apparatus is in use, the oil cup fits into, and its flange rests upon, this ebonite or fibre ring so that the oil cup is centrally disposed within the heating vessel. The ebonite or fibre ring is secured in place by means of six small screws having their heads sunk below the surface of the ring, to avoid metallic contact between the bath and the oil cup.

A split socket, similar to that on the cover of the oil cup, but set vertically, allows a thermometer to be inserted into the water-space. A funnel and overflow pipe also communicate with the water-space through the top plate and two loop handles are provided thereon.

The bath rests upon a cast-iron tripod stand, to the ring of which is attached a cylindrical copper jacket not less than 24 I.W.G. flanged inwards at the top, and of such dimensions that the bath, while resting firmly on the iron ring, just touches with its outward projecting flange the inward-turned flange of the jacket. Two handles are provided on the outer jacket.

Diameter of the outer jacket 6·5 inches ± 0·1 inch.

Spirit Lamp.—A spirit lamp is provided for raising the temperature of the water bath, but any other suitable means may be employed for this purpose.

Thermometers.—Two thermometers are provided, the one for ascertaining the temperature of the bath, the other for determining the flashing-point.

Oil Cup Thermometer.

Type	..	Mercury in glass, nitrogen filled, graduated on the stem, enamel back.
Length	..	Approximately 9 inches.
Stem	..	Diameter 0·24 to 0·28 inch.
Bulb	..	Spherical; made of normal glass approved by the Board of Trade. Diameter, 0·35 inch ± 0·05 inch.
Range	..	50° to 150° F. with expansion chamber. Distance from the bottom of the bulb to the 50° line, 2·75 inches to 3·15 inches. Distance from the 50° line to the 150° line, not less than 4·75 inches.
Immersion	..	A swelling is made in the stem to ensure that the thermometer shall be fixed in its brass collar so that the distance from the top of the collar to the bottom of the bulb is 2·40 inches±0·05 inch.
Graduation	..	Scale graduated to 1° F. divisions. Every 5° and every 0°1 to be indicated by longer lines. Figured at every 10° in full.
Marking	..	"Abel Oil Cup": Identification number, "Fahrenheit"; maker's or vendor's name or trade mark.

Water Bath Thermometer.

Type	..	Mercury in glass, nitrogen filled, graduated on the stem, enamel back.
Length	..	Approximately 9 inches.
Stem	..	Diameter, 0·24 to 0·28 inch.
Bulb	..	Cylindrical, made of a normal glass approved by the Board of Trade. Length, approximately 0·8 inch. Diameter, not to exceed the diameter of the stem.
Range	..	90° to 190° F. with expansion chamber. Distance from the bottom of the bulb to the 90° line, 3·95 inches to 4·35 inches. Distance from the 90° line to the 190° line, not less than 3·55 inches.
Immersion	..	A swelling is made in the stem to ensure that the thermometer shall be fixed in its brass collar so that the distance from the top of the collar to the bottom of the bulb is 3·5 inches ±0·1 inch.
Graduation	..	Scale graduated to 1° F. divisions. Every 5° and 10° to be indicated by longer lines. Figures at every 10° in full.
Marking	..	"Abel Water Bath": Identification number, "Fahrenheit" maker's or vendor's name or trade mark.

The brass collar of the thermometer is in each case of the following dimensions :—

Outside diameter—push fit in socket.

Thickness of tube—22 I.W.G.

Thickness of flange—0·1 inch±0·001 inch.

III. (2) METHOD.

(1) FOR PETROLEUM FLASHING BELOW 90° F.

The test apparatus shall be placed for use in a position where it is not exposed to currents of air or draughts.

The heating vessel or water-bath shall be filled by pouring water into the funnel until it begins to flow out at the spout of the vessel. The temperature of the water at the beginning of the test shall be 130° F., and no heat shall be applied to the water-bath during the test. When a test has been completed and it is desired to make another test the water-bath shall be again raised to 130° F., which may conveniently be done while the petroleum cup is being emptied, cooled and refilled with a fresh sample to be tested. The next test is then proceeded with.

If an oil test-lamp is being used it shall be prepared by fitting it with a piece of flat plaited candlewick and filling it with colza or rape oil up to the lower edge of the opening of the spout or wick tube. The lamp shall be trimmed so that when lighted it gives a flame of about 0·15 of an inch diameter, and this size of flame, which is represented by the projecting white bead on the cover of the oil-cup is readily maintained by simple manipulation from time to time with a small wire trimmer. A gas test-flame may be employed, and if so, the size of the jet of flame shall be adjusted to the size laid down above.

The bath having been raised to the proper temperature, the cup shall be placed on a level surface in a good light, and the oil to be tested shall be poured into it, until the level of the liquid just reaches the point of the gauge which is fixed in the cup. Before a test is begun the temperature of the oil shall be determined and shall be brought to approximately 50° F. The cover, with the slide closed, shall then be put on to the cup and pressed down so that its edge rests on the rim of the cup, and the cup shall be so placed into the bath or heating vessel, every care being taken to avoid wetting the sides of the cup with the oil. The thermometer in the lid of the cup has been adjusted so as to have the correct immersion when the brass collar of the thermometer is properly seated, and its position shall not in any circumstances be altered. When the cup has been placed in the proper position, the scale of the thermometer faces the operator.

The test-lamp shall then be placed in position upon the lid of the cup. When the temperature has reached 56° F. the operation of testing shall be begun, the test flame being applied once for every rise of one degree, in the following manner:—

The slide shall be slowly drawn open while a metronome, set at 75 to 80 beats per minute, beats three times and shall be closed during the fourth beat. A pendulum of 24 inches effective length may be used in place of the metronome, counting one beat from one extremity of the swing to the other.

The barometric pressure shall be observed and recorded. No corrections shall be made except in case of dispute.

(2) FOR PETROLEUM FLASHING BETWEEN 90° F. AND 120° F.

The air-chamber which surrounds the oil-cup shall be filled with cold water at a depth of 1.5 inches, and the heating vessel or water-bath filled as usual, but also with cold water. The lamp shall then be placed under the apparatus and kept there during the entire operation, and the temperature of the oil raised at the rate of 2° F. to 2.25° F. per minute, the testing being carried out as laid down in the previous section, except that the test flame shall first be applied when the temperature has reached 80° F.

(3) FOR SOLID PETROLEUM MIXTURES.

Solid Petroleum Mixtures are to be tested in the Abel apparatus in the following manner:—

The solid mixture must be cut into cylinders 1.5 inch long and 0.25 inch in diameter by means of a cork borer or other similar cutter having the correct internal diameter. These cylinders are to be placed in the petroleum cup of the testing apparatus in a vertical position in such number as will completely fill the cup. The cylinders must be in contact with one another, but must not be so tightly packed as to be deformed in shape.

Five or six of the cylinders in the centre of the cup must be shortened to 0.5 inch to allow space for the thermometer bulb.

The air bath of the testing apparatus must be filled to a depth of 1.5 inch with water. The water bath must then be raised to, and maintained at, a temperature of about 80° F.

The cup must then be placed in the air bath, and the temperature of the sample must be allowed to rise until the thermometer in the oil-cup shows 75° F., when the test flame must be applied.

If no flash is obtained, this temperature must be maintained constant in the oil-cup for one hour, at the expiration of which time the test flame must again be applied.

If a flash is obtained, the solid mixture will be subject to the provisions of the Petroleum Act, 1934.

Note.—It may, in many cases, save time in testing samples of petroleum mixtures to apply the test flame after the sample has been a few minutes in the cup and while still at the temperature of the room in which the test is being carried out, provided that this temperature is below 76° F. If a flash is obtained by this means, it is unnecessary (*for the purpose of the Petroleum Act*) to proceed with the test at a higher temperature.

IV. (1) THE PENSKY-MARTENS APPARATUS.

The standard Pensky-Martens Closed Tester shall be used for determining the flashing-point of all petroleum products having a flashing-point above 120° F.

Every instrument shall be marked with the letters I.P.T., an identification number (on the cup, cover and top plate) and the name of the maker or vendor, such stamping implying a guarantee that the instrument complies with the requirements specified below.

The Pensky-Martens Tester shall include the following major parts:—

Cup.—The cup of the standard Pensky-Martens Tester shall be made of brass and shall satisfy the following dimensional specifications:—

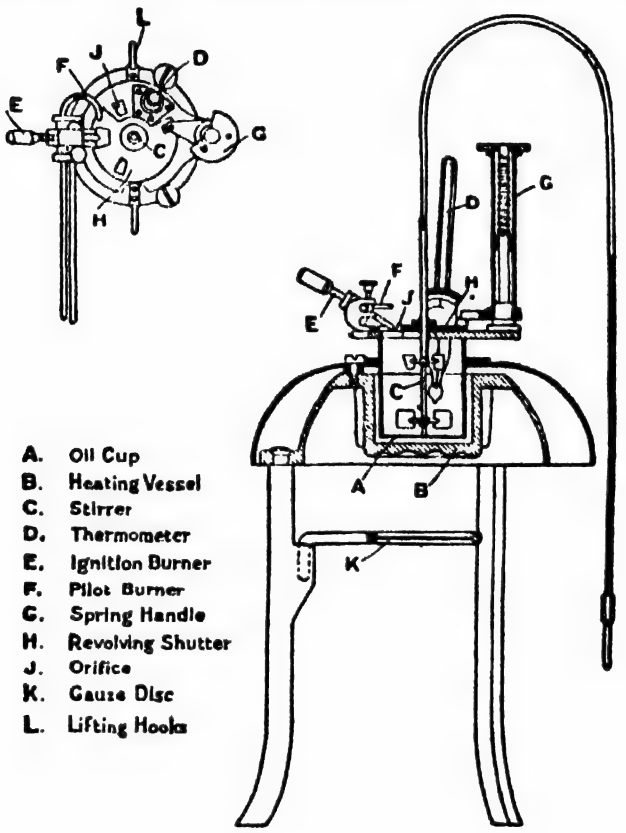

THE PENSKY-MARTENS CLOSED TESTER.

Dimensions.	Inches. Normal.	Tolerances.
Inside diameter below filling mark ..	2·000	±0·050
Difference, inside and outside diameters below filling mark	0·125	±0·010
Inside height	2·200	±0·050
Thickness of bottom	0·095	±0·025
Distance from rim to filling mark ..	0·860	±0·015
Distance lower surface flange to bottom of cup	1·795	±0·015

The inside of the cup may be turned to a slightly larger diameter above the filling mark and the outside may be tapered above the flange,

but the wall thickness at the upper edge shall be not less than 0·04 in. The flange should be approximately 0·5 in. wide and approximately 0·125 in. thick. It shall be equipped with devices for locating the position of the lid on the cup and the cup centrally in the stove. A handle, attached permanently to the flange of the cup, is a desirable accessory.

NOTE.—If the bottom of the cup is affixed it shall be brazed or hard soldered.

Stirring Device.—The lid shall be equipped with a stirring device consisting of a vertical steel shaft, not less than 0·1 in. nor more than 0·125 in. in diameter, mounted in the centre of the cup, carrying two two-bladed brass propellers, and provided with any convenient means for operating. The blades of both propellers shall be approximately 0·3 in. wide and shall be set at an angle of approximately 45°. The smaller (upper) propeller shall have an over-all diameter of approximately 0·75 in. The larger (lower) propeller shall have an over-all diameter between 1·25 and 1·75 in. The thickness of the propeller blades shall be not less than 0·048 in. nor more than 0·08 in., which limits correspond respectively to No. 18 and No. 14 S.W.G. The propeller blades shall be brazed or hard soldered to collars on the vertical shaft and the collars shall have horizontal and vertical dimensions not greater than 0·4 in.

The plane of the centre of the upper propeller shall be 0·4 in. below the level of the rim of the cup. The plane of the centre of the lower propeller shall be 2·0 in. below the level of the rim of the cup. The level of the rim of the cup is in effect the level of the plane part of the portion of the lower surface of the lid inside the rim.

Cover proper.—The cover proper shall be of brass and shall have a rim projecting downward almost to the flange of the cup and fitting the outside of the cup closely. The thickness of the cover, measured just inside the rim, shall be not less than 0·03 in. nor more than 0·08 in. There shall be a proper locating device engaging with a corresponding locating device on the flange of the cup.

There shall be four openings in the cover.

Opening A is an area defined by arcs of two concentric circles and the intersected lengths of two radii. The radius of the outer circle shall be not less than 0·94 in. nor more than 0·97 in. The chord of the arc of the outer circle shall be not less than 0·5 in. nor more than 0·54 in.

Openings B and C are equal areas, each of the same general form as opening A but of approximately half the (angular) width. The radii of the defining inner and outer circles shall be within the limits specified for the radii of the two circles, arcs of which partially define opening A. The chord of the outer arc for opening B or opening C shall be not less

than 0·19 in. nor more than 0·22 in. The sum of the areas of openings B and C shall be not less than 75 per cent. nor more than 100 per cent. of the area of opening A.

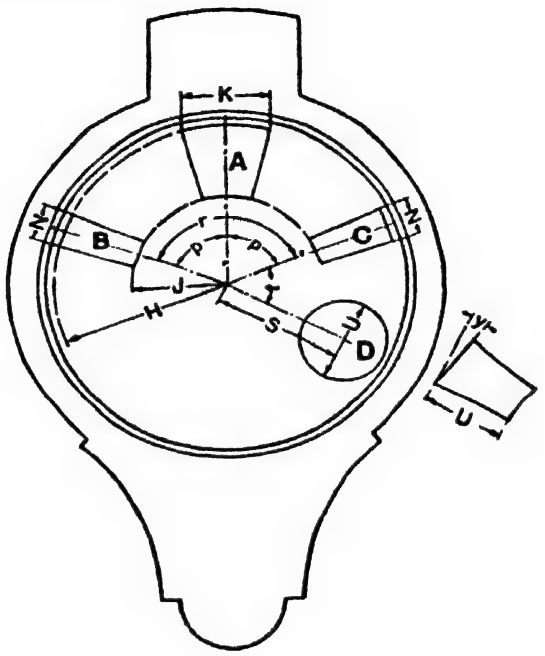

H	Minimum	0·94 in.,	maximum	0·97 in.
J	,,	0·53 in.,	,,	0·56 in.
K	,,	0·50 in.,	,,	0·54 in.
N	,,	0·19 in.,	,,	0·22 in.
S	Approximately	0·75 in.		
U	,,	0·5 in.		
Angles *p*	Equal.			
Angle *r*	Minimum	135°,	maximum	140°.
,, *t*	,,	50°,	,,	60°.
,, *y*	,,	10°,	,,	15°.

COVER OF PENSKY-MARTENS TESTER.

Openings B and C shall be equally distant from opening A, and radii drawn through each of their centres shall be at an angle of not less than 135° nor more than 140°.

Openings A, B, and C need not conform exactly to the shape of geometrical figures bounded by arcs of two concentric circles and intersected length of radii. Their boundaries must, however, fall on or between the lines indicated by the limiting values of the dimensional specification of the preceding text.

Opening D is a split tube to grip the thermometer collar and shall be set at an angle of not less than 10° nor more than 15° from the perpendicular. Its centre is approximately 0·75 in. from the centre of the lid

and on a radius at an angle of not less than 50° nor more than 60° from the radius passing through the opening C. Its height shall be such that, when a standard thermometer is in position, the bottom of the bulb shall be 1·5 in., ±0·1 in., below the level of the rim of the cup (which corresponds to the lower surface of the portion of the lid inside the rim).

Shutter.—The lid shall be equipped with a brass shutter, approximately 0·1 in. thick, operating on the plane of the upper surface of the lid. The shutter shall be so shaped and mounted that it rotates on the surface of the lid about an axis normal to the lid, and through its centre, between two stops so placed that when in one extreme position the openings A, B, and C of the lid are completely closed and when in the other extreme position these openings are completely opened.

Flame exposure device.—The tip of the flame jet shall have an orifice 0·027 in. to 0·03 in. diameter. The flame-exposure device shall be equipped with an operating mechanism which, when the shutter is in the "open" position, depresses the tip so that the centre of the orifice is between the plane of the under and upper surfaces of the lid proper, at a point on a radius passing through the centre of the larger opening A and approximately 0·1 in. from the outer edge of the opening.

The test flame shall be approximately spherical and shall be regulated to be of the same mean diameter as a bead 0·16 in. in diameter of some suitable material mounted on the lid.

The mechanism operating the shutter should be of the spring type and constructed so that when at rest the shutter shall completely close the three openings. When operated to the other extreme the three openings in the lid shall be fully open and the tip of the exposure tube shall be fully depressed.

NOTE.—A pilot flame for automatic relighting of the test flame should be provided.

If the air bath is electrically heated, and gas is not available, an oil burner shall be used as the test flame, the position of which shall correspond with that of the gas flame previously specified.

Stove.—Heat shall be supplied to the cup by means of a properly designed stove which is equivalent to an air bath. This stove shall consist of (1) an air bath and (2) a top plate on which the flange of the cup rests.

Air bath.—The air bath shall have a cylindrical interior 1·625 in. to 1·66 in. deep and a diameter not less than 0·125 in. nor more than 0·156 in. greater than the outside diameter of the cup, with the minimum clearance of 0·05 in. The air bath shall be a flame-heated metal casting.

NOTE.—The casting shall be so designed and used that the temperature of bottom and walls is approximately the same. On this account it should be not less than 0·25 in. thick. The apparatus shall be designed so that products of combustion of the flame cannot come into contact with any part of the cup.

Top plate.—The top plate shall be of metal. The total distance from the upper surface of the plate to the bottom of the air bath shall exceed the distance from the under surface of the flange to the bottom of the cup by not less than 0·063 in. nor more than 0·125 in.

The top plate shall be mounted with an air gap between it and the air bath. The top plate may be attached to the air bath by means of three screws and spacing bushings. The spacing bushings should be of proper thickness to define the air gap which shall be not less than 0·125 in. nor more than 0·187 in. The spacing bushings shall be not more than 0·375 in. in diameter.

Thermometers.—A low range thermometer shall be used with the Standard Pensky-Martens Tester for determining the flashing point above 120°F. The thermometer shall comply with the specification given below.

The thermometers shall conform to the following general specification:—

Type.—Mercury in glass, except where otherwise stated. Engraved stem. Nitrogen filled.

Stem.—The stem shall be made of lead glass or other suitable glass. Enamel back.

Bulb.—The bulb shall be made of a suitable thermometric glass approved by the National Physical Laboratory. At present these glasses are:—

	Identification mark.	Approved for temperatures up to
Normal glass made by James Powell and Sons, Ltd.	Single blue stripe ..	350°C.*
Normal glass made by Frank Tomey and Co., Ltd.	Two blue stripes ..	350°C.*
Normal glass, Jena^{III} made by Schott and Genossen	Purple stripe ..	350°C.*
Normal glass, Gege Elf, made by Glaswerk Gustav Fischer	Blue and red stripe	350°C.
Corning Boro-silicate made by Corning Glass Co.	....	450°C.
Jena 59^{III} made by Schott and Genossen .	....	450°C.
Jena 2954^{III} made by Schott and Genossen ..	Single black stripe	450°C.

Expansion and Contraction Chambers. No contraction chamber shall be above the immersion line and no enlargement of the bore shall be within 10 mm. of the immersion line or of any part of the scale.

Graduation and Figuring.—The graduation lines shall be clearly etched, and of uniform thickness not exceeding 0·15 mm. The lines shall all be at right angles to the axis of the thermometer. When the thermometer is viewed from the front and in a vertical position the lines shall all finish on a line parallel to the axis on the left hand side. Certain of the graduation lines shall be extended on the right hand side but the shortest graduations shall not extend across the bore. When

*May be used up to 400°C. if a careful examination of the zero is made periodically.

the diameter of the tube permits the figures shall be upright when the thermometer is viewed from the front and in a vertical position, and should preferably be placed so that they would be intersected by the line to which they refer if it were extended.

Marking.—In addition to the special markings given in the table, each thermometer shall be marked with an identification number, and the maker's, or vendor's, name or trade mark:—

Name and special marking.	"I. P. T. P. M.—Low."
Dimensions—	
Stem, diameter	6-7 mm.*
Bulb, shape	Round.
Bulb, length	....
Bulb, diameter	8 mm. max.
Overall length, ±5 mm.	275 mm.
Length of graduated portion	150-180 mm.
Distance, bottom of bulb to	20° mark, 70-85 mm.
Range	20° F. to 230° F.
Graduation	1° F.
Longer lines at each	5° F. and 10° F.
Figured at each	10° F.
Expansion chamber	Required.
Immersion	2·2 in.
Top finish	Glass ring.

Each thermometer shall be mounted securely in a thermometer collar so that from the under-side of this collar to the bottom of the bulb the distance is 2·1 in. (±0·05 in.). The thermometer collar shall have an outside diameter of 0·5 in., ±0·002 in., and a flange 0·1 in., ±0·01 in., in thickness. The cement used to fasten the thermometer into the collar shall be of such a nature that it will withstand the action of oil up to the highest temperature at which the thermometer is used.

*A swelling to be provided to ensure the location of the thermometer collar at the correct point.

Drying of the sample.

If gas oil or fuel oil is being tested, the sample shall be dried by the following method:—

One hundred grams of well-dried granular calcium chloride is placed in a dry wide-mouth stoppered glass bottle.

Two hundred and fifty millilitres* of the oil is then poured upon the calcium chloride. The stopper is secured in position by tying. The bottle is then well shaken and is stood in a vessel of water, the level of the water being up to about one-third of the height of the oil in the bottle. The water is next raised to a temperature of 50°C. (120°F.), and is maintained at this temperature for a period of seven hours, the bottle and its contents being well shaken up at intervals of about an hour. At the end of this treatment the bottle and its contents are allowed to cool to atmospheric temperature; the bottle is then opened and sufficient of the oil for test filtered through paper on a Buchner funnel.

IV. (2) METHOD.

All parts of the cup and its accessories shall be thoroughly clean and dry before starting the test. Particular care shall be taken to avoid the presence of any gasoline or naphtha used to clean the apparatus after a previous test.

The cup shall be filled with the oil to be tested up to the level indicated by the filling mark.

The lid shall be placed on the cup and the latter set in the stove. Care should be taken to have the locating devices properly engaged. The thermometer shall be inserted.

The test flame shall be lighted and adjusted so that it is of the size of a bead of 0·16 in. in diameter.

Heat shall be supplied at such a rate that the temperature read on the thermometer increases not less than 9 or more than 11 degrees per minute. The stirrer shall be turned at a rate of approximately 60 revolutions per minute.

Application of the test flame shall be made at each temperature reading which is a multiple of 2°F. up to 220°F. For the temperature range above 220°F., application shall be made at each temperature reading which is a multiple of 5°F. The first application of the test flame shall be made at a temperature at least 50°F. below the actual flashing-point. Application of the test flame shall be made by operating the device controlling the shutter and test-flame burner so that the flame is lowered in one-half second, left in its lowered position for one second, and quickly raised to its high position. Stirring shall be discontinued during the application of the test flame.

The flashing-point is taken as the temperature read on the thermometer at the time of the flame application that causes a distinct flash in the interior of the cup. The true flash must not be confused with the bluish halo that sometimes surrounds the test flame for the applications preceding the one that causes the actual flash.

*If a smaller quantity of oil is to be dried the amount of calcium chloride must be adjusted in proportion.

The barometric pressure shall be observed and recorded. No corrections shall be made except in case of dispute, when the flashing-point figure shall be corrected according to the following rule:—

For each inch (25·4 mm.) below 29·92 in. (760 mm.) barometric reading add 1·6°F. to the flashing-point.

For each inch (25·4 mm.) below 29·92 in. (760 mm.) barometric reading subtract 1·6°F. from the flashing-point.

V. THE FLASHING-POINT.

If a flash takes place at any temperature below 76°F. the temperature at which it occurs is noted. Two fresh portions of the sample are then to be successively tested in a similar manner and the results recorded. If no greater difference than two degrees Fahrenheit exists between any two of the three recorded results and if in no instance the flash has taken place within eight degrees Fahrenheit of the temperature at which the testing was commenced, the average of the three readings gives the flashing-point recorded by that particular instrument, but without either apparatus correction or thermometer correction. In the event of there being a greater difference than two degrees Fahrenheit between any two of the readings, or if the flash has occurred within eight degrees of the temperature at which the testing was commenced, the series of tests is to be rejected and a fresh series of three similarly obtained.

If, however, a flash has occured at or below 64°F. when the test was applied in the manner above described, the next test shall be commenced 10°F. lower than the temperature at which the flash had been previously obtained, and this procedure shall be continued until the results of three consecutive tests do not show a greater difference than two degrees Fahrenheit and until a flash has not occurred in any of the three tests within eight degrees Fahrenheit of the temperature at which the test was commenced. Provided always that if at the commencement of the series of tests a flash has occurred on the first application of the test-flame at 56° F. and if a flash has also occurred on the first application of the flame in each of the three successive tests in which the test-flame is first applied at 46°F. as above directed, the testing officer shall certify that the petroleum has a flashing-point below 47°F. and the sample shall be reported as "dangerous petroleum".

If a temperature of 76°F. has been reached without a flash occurring, the application of the test-flame is to be continued at every degree rise of temperature until a temperature of 89°F. has been reached. If no flash occurs up to this point, the test shall be continued on a fresh sample as in Section III (2) (2) above.

If no flash occurs up to 120°F., the flashing-point shall be determined by the Pensky-Martens apparatus and method, as described above.

Simla, the 29th August 1936.

No. M.-1077.—In exercise of the powers conferred by section 29 of the Indian Mines Act, 1923 (IV of 1923), the Governor-General in Council is pleased to direct that the following further amendments shall be made in the Indian Coal Mines Regulations, 1926, the same having been previously published as required by sub-section (*1*) of section 31 of the said Act, namely:—

In the said Regulations—

I. In regulation 2 after clause (*c*), the following clause shall be inserted, namely:—

"(*cc*) "Permitted Explosive" means an explosive permitted by the Chief Inspector under such definition and subject to such conditions as he may from time to time lay down by notification in the Gazette of India."

II. After regulation 96, the following regulation shall be inserted, namely:—

"96A. In every underground part of a mine in which inflammable gas has been found during the previous twelve months or in which there is a risk of inflammable gases entering the mine from an underground fire,—

(1) main haulage and travelling roads shall, as far as practicable, be kept free from accumulations of fine coal dust;

(2) all coal tubs shall be so constructed and maintained as to prevent, as far as practicable, coal dust escaping through their sides, ends or floors."

III. For regulation 107 the following regulation shall be substituted, namely:—

"107. The amount of every charge of explosive shall not be disproportionate to the work to be done. The charge shall be placed in a properly drilled and placed shot hole and shall have sufficient stemming. A sufficient supply of suitable non-inflammable stemming material shall be provided at places convenient to the shot-firers."

IV. In regulation 111, for the words "clay or other non-inflammable substance" the words "suitable non-inflammable substances" shall be substituted.

V. (1) In regulation 116, for the words and figures "unless the explosive is one of the "Permitted Explosives" allowed to be used by any order under the Coal Mines Act, 1911", the words "unless the explosive is a Permitted Explosive" shall be substituted;

(2) in the margin to the said regulation the figures, word and letters "1 and 2 Geo. 5, Ch. 50" shall be omitted.

VI. After regulation 116, the following regulation shall be inserted, namely:—

"116-A.—In any mine in which the use of "Permitted Explosives" is required by these regulations or by any bye-law or order made under the Act:—

(*a*) where more shots than one are charged for firing, the shots shall be fired simultaneously;

(*b*) the aggregate charge in any number of shots fired simultaneously in coal shall not exceed the permissible maximum charge laid down by the Chief Inspector for the kind of "Permitted Explosive" used;

(*c*) no shot shall be fired in coal in any gallery unless—

(1) the coal has been undercut, overcut or sidecut; and

(2) the length of the shot hole is at least six inches less than the length of the cut."

VII. For regulation 124 the following regulation shall be substituted, namely:—

"124. In every mine in which inflammable gas has been found during the previous twelve months, safety lamps shall be used in all galleries driven to a distance greater than the length of two pillars ahead of the last connecting gallery and in all advance galleries less than five feet wide, and no such advance gallery shall be driven more than ten feet ahead of the widened gallery; in every such gallery the ventilating current shall be conducted as near to the working face as is practicable."

RESOLUTION.

The 27th August 1936.

No. M.-1250.—The Governor-General in Council, with the sanction of His Majesty's Secretary of State for India in Council, is pleased to direct that the following further amendment shall be made in the rules regulating the grant by local Governments of licences to prospect for minerals and of mining leases in British India, published with the Resolution of the Government of India in the Department of Commerce and Industry No. 7552-7581-121, dated the 15th September 1913, as subsequently amended:—

To rule 1 of the said Rules the following proviso shall be added, namely:—

"Provided that the previous sanction of the Secretary of State for India in Council shall not be required to the grant of such licence or lease in accordance with rules made by an authority in India with his previous approval".

A. G. CLOW,

Secy. to the Govt. of India.

DEPARTMENT OF COMMERCE.

NOTIFICATIONS.

MERCHANT SHIPPING.

Simla, the 29th August 1936.

No. 5-M I. (26)/35.—Engineer Commander G. Hull, R.I.N., Officiating Chief Surveyor with the Government of India, was re-appointed as Principal Engineer and Ship Surveyor, Mercantile Marine Department, Calcutta, with effect from the 16th December 1935.

No. 5-M.I. (3)/36.—The services of Engineer Commander G. Hull, R.I.N., Principal Engineer and Ship Surveyor, Mercantile Marine Department, Calcutta, have been replaced at the disposal of the Defence Department (Navy Branch), with effect from the 3rd July 1936.

No. 5-M.I. (3)/36.—Engineer Commander J. E. Moloney, R.I.N., has been appointed as officiating Principal Engineer and Ship Surveyor, Mercantile Marine Department, Calcutta, with effect from the 4th April 1936, and as Principal Engineer and Ship Surveyor, Mercantile Marine Department, Calcutta, with effect from the 3rd July 1936.

Engineer Commander J. H. Mackay, R.I.N., continued to officiate as Second Engineer and Ship Surveyor, Mercantile Marine Department, Calcutta, with effect from the 3rd April 1936, and has been appointed as Second Engineer and Ship Surveyor, Mercantile Marine Department, Calcutta, with effect from the 3rd July 1936.

Engineer Lieutenant Commander H. J. Creswell, R.I.N., continued to officiate as Third Engineer and Ship Surveyor, Mercantile Marine Department, Calcutta, with effect from the 3rd April 1936, and has been appointed as Third Engineer and Ship Surveyor, Mercantile Marine Department, Calcutta, with effect from the 3rd July 1936.

Engineer Lieutenant Commander A. B. Collins, R.I.N., continued to officiate as Fourth Engineer and Ship Surveyor, Mercantile Marine Department, Calcutta, with effect from the 3rd April 1936, and has been appointed as Fourth Engineer and Ship Surveyor, Mercantile Marine Department, Calcutta, with effect from the 3rd July 1936.

Engineer Lieutenant E. T. Elliott, R.I.N., continues to officiate as Fifth Engineer and Ship Surveyor, Mercantile Marine Department, Calcutta, with effect from the 3rd April 1936.

H. DOW,

Addl. Secy. to the Govt. of India.

FOREIGN AND POLITICAL DEPARTMENT.

NOTIFICATION.

Simla, the 27th August 1936.

No. 510-G.—With the sanction of His Majesty's Government, the Governor General in Council is pleased to recognise the appointment of Mr. C. H. Oakes as Vice-Consul for the United States of America at Calcutta.

H. A. F. METCALFE,

Foreign Secy. to the Govt. of India.

RAILWAY DEPARTMENT.

Railway Board.

Simla, the 5th August 1936.

NOTIFICATION.

No. 0112-F.—In pursuance of sub-section (*1*) of section 135 of the Indian Railways Act, 1890 (IX of 1890), the Governor General in Council is pleased to declare that the administration of the East Indian Railway shall be liable to pay in aid of the funds of the local authority set out in the first column of the schedule annexed hereto the tax specified in the second column thereof:—

Schedule.

1			2
Local authority.			Tax.
District. 1(1)	Police-station. 1(2)	Name of union board. 1(3)	
Burdwan ..	Burdwan ..	Saraitikar ..	Union rate.

L. H. KIRKNESS,

Secretary, Railway Board.

LEGISLATIVE DEPARTMENT.

NOTIFICATIONS.

Simla, the 21st August, 1936.

No. F. 101-XIX/36-C. & G.—In pursuance of the provisions of sub-rule (*2*) of rule 26 of the Legislative Assembly Electoral Rules, the Governor General is pleased to nominate Mr. Satyendra Nath Roy, C.I.E., being an official to be a Member of the said Legislative Assembly.

No. F. 101-XIX/36-C. & G.—In pursuance of the provisions of sub-rule (*2*) of rule 26 of the Legislative Assembly Electoral Rules, the Governor General is pleased to nominate Mr. Susil Chandra Sen, being an official, to be a Member of the said Legislative Assembly.

The 22nd August, 1936.

No. F. 111/36-C. & G.—In pursuance of the provisions of sub-rule (*2*) of rule 26 of the Council of State Electoral Rules, the Governor General is pleased to nominate Mr. Bijay Kumar Basu, C.I.E., being a non-official, to be a Member of the said Council of State.

G. H. SPENCE,
Secy. to the Govt. of India.

LEGISLATIVE ASSEMBLY DEPARTMENT.

NOTIFICATION.

Simla, the 11th August, 1936.

No. F. 5-I/36-A.—In accordance with the provisions of sub-rule (*9*) of rule 11 of the Legislative Assembly Electoral Rules, the name of the following candidate, who has been declared to be elected as a Member of the said Assembly by the constituency mentioned opposite his name, is hereby published:—

Name.	Constituency.
Mr. T. Chapman-Mortimer ..	Bengal (European).

MD. RAFI,
Secy. to the Govt. of India.

Registered No. C207

The Calcutta Gazette

THURSDAY, SEPTEMBER 10, 1936.

PART IB

Educational Notices.

Education Department, Bengal.

NOTIFICATION.

Calcutta, the 21st August 1936.

The next Interpretership Examination in Bengali will be held by a Board of Examiners on the 30th November and 1st December 1936 in the room of the Assistant Director of Public Instruction, Bengal, in Writers' Buildings, Calcutta. The oral part will be taken on the first day and the written part on the second day. The time for examination will be as in rule X of the Rules for the Encouragement of the Study of Oriental Languages. Officers under the Government of Bengal who desire to attend the examination and have been duly permitted by the Local Government to appear at the examination should present themselves for examination before the Board of Examiners at 10 a.m. on each of the days mentioned above.

J. M. BOTTOMLEY,

Director of Public Instrn., Bengal.

ERRATUM.

Results of the Sub-Overseer Examination Board, 1936, published in the "Calcutta Gazette", dated the 16th July 1936, on page 1150, Part IB.

Read

Roll 120 Sunil Charan Gangopadhyay

for

Roll 120 Sunil Chandra Gangopadhyay.

Calcutta University.

Senate House, the 29th August 1936.

NOTICE.

It is hereby announced for general information that a centre has been opened at Rampurhat, in the district of Birbhum (Bengal), for holding the Matriculation Examination, 1937, on the usual conditions.

B. B. DUTT,

Controller of Examinations.

Calcutta University.

NOTIFICATION No. MISC. R. 18.

Senate House, the 31st August 1936.

It is hereby notified for general information that the Government of Bengal (Ministry of Education) have sanctioned the following changes proposed in Chapters XXXIII and XXXVII of the Regulations relating to the distribution of pass marks in Science subjects for the M.A. and M.Sc. Examinations and the changes consequent thereon :—

The second paragraph under the head "Anthropology" in p. 264 (M.A. Examination) and pp. 361-62 (M.Sc. Examination) of the Regulations (edition, 1935) be replaced by the following :—

"This course shall be as follows :

Theoretical—4 papers—100 marks each.

Paper I.

Comparative Anatomy of the Primates. Human Palæontology. Evolution.

Paper II.

Racial Somatology. Anthropography. Racial Prehistory.

Paper III.

Primitive Society and Religion. Evolution of Culture including Prehistory.

Paper IV.

A. Human heredity and Racial Hygiene. Biometry.

Or

B. Intensive study of some primitive tribes. Advanced social Anthropology.

Or

C. Intensive study of some castes. Non-primitive Indian Society and Religion.

Practical—4 papers—100 marks each.

Paper V.

Human Osteology. Primate Osteology. Fossil men and primates.

Paper VI.

Somatometry. Osteometry. Statistical treatment of Anthropometric data.

Paper VII.

Prehistoric Archæology. Pleistocene Palæontology.

Paper VIII.

Technology and Museum methods. Field work.

The last but one paragraph of the syllabus in Botany (p. 357 of the Regulations) be replaced by the following :—

Five theoretical papers shall be set under the above heads, one under each. Each paper shall be of four hours' duration and shall carry 80 marks. The practical examination shall be conducted by four papers, each carrying 100 marks.

That the last sentence of the last paragraph of the syllabus—Botany (p. 357 of the Regulations) be replaced by the following :—

The maximum marks allotted to the research work shall be 280 and 200 marks shall be allotted to two practical papers of 100 marks each, to be selected by the candidate.

The following changes be made in the Regulations :—

I. In section 6, Chapter XXXVIII of the Regulations (p. 347 of edition, 1935) :—

1. In the paragraph beginning with "in Physics there shall be" etc., replace "Physics" by "Physics and Geology" and

2. In the paragraph beginning with "In Physiology there shall be" etc., replace "Physiology" by "Botany and Physiology."

II. In section 8 (*b*) under head "General", Chapter XXXVII of the Regulations (p. 362 of edition, 1935) :—

1. Put a comma in place of "and" between "Pure Mathematics" and "Mixed Mathematics" and insert "Physics, Botany, Physiology and Geology" after "Mixed Mathematics."

2. Add the following new sections below present section 8 (*b*) and number the clauses accordingly :—

In order to pass in Physics and Geology a candidate must obtain 165 marks in the aggregate of the five theoretical papers and 120 marks in the practical examination. If in any theoretical paper a candidate obtains less than 25 marks, these marks shall not be included in his aggregate. Candidates obtaining 360 marks shall be placed in the Second Class and those obtaining 480 marks in the First Class.

In order to pass in Botany and Physiology a candidate must obtain 132 marks in the aggregate of the five theoretical papers and 160 marks in the practical examination. If in any theoretical paper a candidate obtains less than 20 marks, these marks shall not be included in his aggregate. Candidates obtaining 360 marks shall be placed in the Second Class and those obtaining 480 marks in the First Class.

The following changes be made in the Regulations :—

(1) Section 1, paragraph 2, Chapters XXXIII and XXXVII (pp. 232 and 346) :—

The words "Or under one or more University Professors or Lecturers in that subject" be replaced by :—

"Or in the Post-graduate classes of the University."

(2) Section 1, paragraph 4, Chapter XXXIII (p. 232) :—

The words "under one or more University Professors or Lecturers" in line 3 be replaced by "in the Post-graduate classes of the University."

(3) Section 3, Chapter XXXIII and Chapter XXXVII (pp. 233 and 346) :—

The words "Or under one or more University Professors or Lecturers in that subject" be replaced by—

"Or in the Post-graduate classes of the University."

NOTE.—The above changes will take effect from the current session.

J. CHAKRAVORTI, *Registrar.*

Calcutta University.

Senate House, the 26th August 1936.

NOTIFICATION No. MISC. R. 19.

It is hereby notified for general information that the Government of Bengal (Ministry of Education) have sanctioned the following changes proposed in Chapter LII of the Regulations, relating to the introduction of Aeronautics as an alternative subject for the B. E. Degrees in both Civil and Mechanical Engineering:—

(1) That the following syllabus in Aeronautics be inserted at the end of section 7, page 466, of the Regulations (edition of 1935):—

Aeronautics.

(For candidates in Civil and Mechanical Engineering only.)

FIRST-YEAR COURSE.

(*a*) *Lectures.*

(1) Fluid Motion:—Viscosity, resistance, Reynold's number. (2) Dimensional analysis and dynamical similarity, from model to full-scale. (3) Aerofoil,—Angle of Incidence lift, drag and moment co-efficients, scale effects, aspect ratio, induced and profile drag, introduction to Lanchester Prandtl theory, lift distribution on aerofoil; monoplane and the biplane; lift and weight of a machine. (4) Structural parts—main plane and dihedral angle, body and fuselage, struts and wires, under-carriage. (5) Control—rudder, elevator and wing flaps. (6) Stabilisers—roll, pitch and yaw, tail planes and fins. (7) Approximate Performance Estimation—gliding angle, climb, top speed, efficient speed and landing speed. (8) Propeller—Froude theory and introduction to aerofoil theory, efficiency. (9) Engines—Aero engines, hydrodynamic and thermodynamic aspects of carburettors.

(*b*) *Laboratory.*

The Practical work will relate to—

Calibration of float-gauge, Static Plate, Venturi tube, with standard Chattock gauge. Velocity distribution in wind channel and water-oil channel. Pressure measurements on two-dimensional symmetrical bodies. Determination of lift and drag co-efficients.

(*c*) *Drawing Office.*

Design of simple structural and machine points and connections.
Design of struts, beams and shafts. Load estimation.
Stresses in 2- and 3-Dimensional frames.

SECOND-YEAR COURSE.

(*a*) *Lectures.*

(1) Mathematical theory of two-dimensional fluid motion, conformal representation, vortex motion, aerofoil theory, monoplane and biplane, three-dimensional effects, effect of viscosity, boundary layer theory, Karman vortex.

(2) Air screw theory.

(3) More accurate performance estimation.

(4) Stability in flight, auto-rotation, slotted wings, Bryan on stability.

(5) Vibration and gyroscopic effects of propeller.

(6) Airships, balloons.

(7) Gliders, autogyros, seaplanes, etc.

(8) Materials used in aircraft construction.

(9) Trend of modern aerodynamic research.

(*b*) *Laboratory.*

Study of flow movements. Experiments on rotating discs, cylinders, spheres, etc., aerofoil sections, models of airships, models of aeroplanes.

(*c*) *Drawing Office.*

Design of spars, interplane struts, main planes, etc. Stresses in fuselage. Secondary stresses.

(The course in Aeronautics is open only to students who have shown distinct proficiency in Mathematics in the 2nd year class.)

(2) That the subjects and distribution of the marks under Group I (Professional Section) of the B. E. Examination in Civil Engineering (Regulations, 1935, page 467) be replaced by the following:—

Group II.

Roads and Railways	400
Applied Mechanics	400
Hydraulics	400
and either	
Irrigation and Sanitary Engineering	400
or	
Aeronautics (Paper and Sessional work)	400
	1,600

(3) That the subjects and distribution of marks under Group III (Professional Section) of the B. E. Examination in Mechanical Engineering (Regulations, 1935, page 469) be replaced by the following:—

Group III.

Workshop (Sessional work)	300
and either	
Works Management and Accounts	200
or	
Aeronautics (Paper and Sessional)	200
	500

Note.—The above changes will be given effect to from the examination in 1939.

J. CHAKRAVORTI, *Registrar.*

NOTIFICATION.

Departmental Examination, 1936

Calcutta, the 4th September 1936.

(For First Grade Vernacular Training Schools in Western Bengal.)

The first and second Departmental Examinations of First Grade Training Schools in the Presidency and Burdwan Divisions will be held on the following days:—

Monday,	4th January 1937	2 papers.
Tuesday,	5th "	"	2 "
Wednesday,	6th "	"	2 "
Thursday,	7th "	"	2 "
Friday,	8th "	"	1 paper.
Saturday,	9th "	"	2 papers.

2. The examinations will be held at the First Grade Training Schools at Calcutta and Hooghly.

3. The following classes of candidates will be eligible for the first Departmental Examination:—

(*i*) Students of the second year class of First Grade Training Schools.

(*ii*) *Bona fide* teachers who failed to satisfy the examiners at a previous first Departmental Examination.

(*iii*) *Bona fide* teachers holding second grade Vernacular Mastership certificates.

(*iv*) *Bona fide* teachers who, having passed either (*a*) the Primary *in situ* examination, or (*b*) a public examination of the Middle Vernacular standard, or (*c*) some higher examination, have also passed the final examination of a *Guru*-training School conducted on a Middle Vernacular basis, and have thereafter served as teachers for at least one year.

(*v*) *Bona fide* teachers who have not passed any of the examinations referred to above as (*a*), (*b*) and (*c*), but have passed the final examinations of a *Guru*-training School conducted on a Middle Vernacular basis, after going through the prescribed term of training as regular students of such schools, and have thereafter worked as teachers for at least three years.

4. The following classes of candidates will be eligible for the second Departmental Examination:—

(*i*) Students of the third year class of First Grade Training Schools.

(*ii*) *Bona fide* teachers who have passed the first Departmental Examination and have worked as teachers for one year since passing it.

(*iii*) *Bona fide* teachers who hold second grade certificates earned prior to 1902.

5. Teachers holding first grade or second grade Vernacular Mastership certificates under the old system prior to 1902 may be examined in any or all of the following groups or subjects of the second or first Departmental Examination, respectively, under the new system:—

(*i*) Elementary Science.

(*ii*) Practical Geometry and Drawing.

(*iii*) The Art of Teaching.

(*iv*) Manual Work and Drill.

(*v*) English—"Direct Method of Teaching English."

6. Candidates who are not students of a Government First Grade Training School are required to send by the 21st September 1936 a written application for admission to the examinations together with a fee of one rupee, to the head master of the school at which they elect to be examined. Full information will be furnished by the head masters of those schools on application.

7. Complete lists of candidates for examination should be forwarded by head masters of Training Schools to the undersigned by the 28th September 1936. The fees received from candidates must be deposited in the local treasury, and the duplicates of the *chalans* sent to this office along with the lists of candidates.

8. The current session of Training Schools will end on the 31st December 1936 and the new session will begin on the 2nd January 1937.

G. DAS GUPTA, *Principal*,
David Hare Training College (*offg.*).

Bengal Engineering College.

The 28th August 1936.

Under the authority of the Government of Bengal an examination called the "Bengal Local Bodies' Accountants' Examination" will be held at the Bengal Engineering College, Botanic Garden post office, Howrah, on Monday, the 18th January 1937, and the following two days, concurrently with the Divisional Accountants' Examination.

No candidate will be admitted to the Bengal Local Bodies' Accountants' Examination unless he is over 24 years of age and thus ineligible to appear at the Divisional Accountants' Examination.

For the prospectus, application should be made to the Principal, Bengal Engineering College, post office Botanic Garden, Howrah.

C. R. COPELAND, *Officer-in-charge*.

Survey Education Advisory Board, Bengal.

Calcutta, the 7th September 1936.

Names of the candidates successful at the Amin Examination held in 1936.

(Arranged in order of merit.)

(Candidates marked with an asterisk are eligible for admission to the Survey Final Course in the Bengal Survey School, Mainamati.)

FIRST DIVISION.

Comilla.

1 Jatindra Mohon Nath.*

Rangpur.

2 Adhir Bandhu De.*
3 Sukumar Brahma.*

Pabna.

4 Abani Kanta Munshi.*

Comilla.

5 Pahalman Bhartee.*

Pabna.

6 Jitendra Nath Deb.
7 Jatindra Kumar Sarker Choudhuri.
8 Manindra Nath Mustafi.*

Chandradwip.

9 Chitta Ranjan Biswas.*

Comilla.

10 Sisir Kumar Chakraborty.*

Pabna.

11 Deba Brata Bhattacharjee.*

Rajshahi.

12 Purnendu Nath Chakravorty.*

Comilla.

13 Haripada Ghatak.

Rangpur.

14 Ajit Kumar Sarker.

SECOND DIVISION.

Pabna.

15 Heramba Mohan Bakshi.

Chandradwip.

Dhirendra Nath Somadder.*

Comilla.

17 Nural Hoque.*

Rangpur.

18 Sailendra Nath Sen.*

Pabna.

19 Prahlad Chandra Chattopadhyaya.*

Rangpur.

20 Prafulla Kumar Guha.
21 Nagendra Nath Bhowmic.*
22 Rabindra Nath Choudhury.*

Comilla.

23 Jogesh Chandra Banik.*

Pabna.

24 Sudhendu Kumar Mitra.

Rajshahi (ex-student).

Ardhendu Paul.*

Rangpur.

26 Mukunda Lal Das.

Comilla.

Habibor Rohmen.*
28 Ramani Mohan Majumder.*

Rangpur.

29 Ajit Kumar Bose.*

Rajshahi.

30 Jnanananda Bhattacharjee.*

Comilla.

31 Nani Gopal Gangopadhaya.*

Rangpur.

32 Kshitish Chandra Bose.

Comilla.

33 Nirad Bihari Das.*

Rangpur.

34 Manoranjan Chatterji.

Chandradwip (Repeater).

35 Manindranath Ghosh Dastidar.*

Rajshahi (Repeater).

36 Jadu Nath Sarker.

Chandradwip.

37 Jyotish Chandra Nag.*
38 Jyotiriswar Guha.

Rajshahi.

Kshitish Chandra Chakravarty.*

Rajshahi (ex-student).

40 Hari Mohon Sanyal.

Comilla.

Upendra Kumar Bandyopadhyay (Banerjee).*

Rajshahi.

42 Bhupendranath Ray.*

Comilla.

43 Prankrishna Mukhopadhaya.*

Rangpur.

44 Nikhil Kanta Dey.

Comilla.

45 Jagadish Chandra Bose.

Rangpur.

46 Jagat Chandra Sarker.

Rajshahi.

47 Jagadish Chandra Choudhury.

Comilla.

48 Abdul Hamid Miah.

Rangpur.

49 Chitta Ranjan Dutt.

Chandradwip (Repeater).

Md. Mortaja Ali Talukder.

THIRD DIVISION.

Comilla.

51 Bhagaban Chandra Chakma.
52 Dwijendra Lal Majumder.*

Rajshahi.

53 Dhirendra Kumar Choudhury.

Comilla

54 Hriday Ranjan Chakma.

Rangpur.

55 Radhika Mohan Das.

Comilla.

56 Phanindra Mohan Das.
57 Prafulla Ranjan Mukhopadhaya.*

Rajshahi.

58 Radhendranath Chakravarty.*

Rajshahi (ex-student).

59 Santosh Kumar Saha Chowdhury.

Comilla.

60 Narendranarayan Shaha.
61 A. F. M. Golam Sarwar.
62 Ahmad Karim.

N.B.– Reference above.

Pabna is E. B. Technical School, Pabna.

Rajshahi is D. J. Industrial School, Rajshahi.

Comilla is Bengal Survey School, Comilla.

Rangpur is B. G. Technical School, Rangpur.

Chandradwip is Chandradwip Institution, Madhabpasa, Barisal.

ADINATH SEN, *Secretary*,
Survey Education Advisory Board, Bengal.

Education Department, Bengal.

NOTIFICATION.

No. 8 T.B.—31st August 1936.—It is hereby notified for general information that the following text-books on Document Writing and Mahajani Accounts are approved for use in middle vernacular schools in this Presidency for four years with effect from the 1st January 1937:—

Document Writing.

Classes III and IV.

1. Prathamik Patradalil Shiksha, Part I. Abdul Hakim. (Islamia Library, Dacca.)

2. Nutan Patradalil Shiksha. Indu Bhusan Datta. (Minerva Library, Dacca.)

3. Adarsha Nutan Patradalil Shiksha. Mosammat Jennatunnessa Khanam and Priyabala Sarkar. (Liakat Publishing Company, Dacca.)

4. Patradalil Likhan Shiksha, Part II. Mozammel Haque. (M. Afzalul Haque, Calcutta.)

Classes V and VI.

1. Nutan Zamindari Mahajani Path. Upendra Nath Bhattacharyya. (Bhattacharyya and Son, Calcutta.)

2. Patradalil Likhan Pranali. Siddheswar Pain. (Siddheswar Press Depository, Calcutta.)

3. Saral Patradalil Shiksha, Part II. Nirmal Chandra Datta. (Santosh Library, Dacca.)

Mahajani Accounts.

Classes IV-VI.

1. Sahaj Mahajani Hisab. Abdul Hakim. (Islamia Library, Dacca.)

2. Mahajani Hisab. Sudhir Kumar Banerjee. (S. C. Auddya and Co., Ltd., Calcutta.)

3. Mahajani Hisab Mukur. Indu Bhusan Datta. (Minerva Library, Dacca.)

4. Saral Subhankari O Mahajani Hisab. Anil Kumar Das. (S. K. Das, Dacca.)

J. M. BOTTOMLEY,
Director of Public Instrn., Bengal.

N.B.—(1) The subjects mentioned in Government notification No. 3059Edn., dated the 13th November 1928, on pages 977 and 978, Part IB of the *Calcutta Gazette* of the 6th December 1928, are identical for both middle English and middle vernacular schools. But middle vernacular schools under the new scheme should teach "Document Writing" and "Mahajani Accounts" instead of English.

Candidates appearing in the Middle Scholarship Examination from the middle vernacular schools will take up a paper on "Document Writing" and "Mahajani Accounts", while those appearing in the examination from the middle English schools will take up English. The examination in all other subjects will be common for candidates from the two types of middle schools (*vide* Government notification No. 4365Edn., dated 25th November 1930).

(2) List of text-books on the above subjects approved in this office notification No. 4T.B., dated the 13th November 1931, will be cancelled after 31st December 1936.

(3) Price is to be calculated at the rate of one anna and six pies for each 32 pages of printed matter *plus* a concession of 40 per cent.

Registered No. C207

The Calcutta Gazette

THURSDAY, SEPTEMBER 10, 1936.

PART II

Advertisements.

Notices

Advertisements, Notices, etc., intended for insertion in this part of the Gazette must be sent to Press before 12 noon on Saturday, and all costs deposited and proofs returned by 4 p.m. on Monday. Manuscripts and postal remittances must be addressed to Superintendent, Government Printing (Publication Branch), Bengal Government Press, Alipore.

For the convenience of advertisers located in Calcutta, arrangements have been made to accept advertisements and prepayment of charges at Sales Office, Ground Floor, Writers' Buildings, Calcutta. The latest time for receipt of advertisements for current week's Gazette has been extended till 4 p.m. on Mondays.

Land Sale Notices.

Notification A.

NOTICE is hereby given under sections 6 and 13, Act XI of 1859, that the undermentioned estates and shares of estates in the district of Rangpur, will be put up for sale at the office of the Collector of that district on the 25th September 1936, at 11 a.m., for arrears of revenue (and other demands which by law are realisable as arrears of land revenue).

When in columns 5, 7 and 9 of the following statement it is stated that only a share is to be sold, it is to be understood that a separate account is kept for that share :—

Tauzi No	Name of mahal and pargana.	Sadar jama of whole estate.	Whether the whole estate is to be sold	If only a share is to be sold, specification of such share or shares.	Names of proprietors of property to be sold.	If only a share is to be sold, the sadar jama of such share	If the whole estate is to be sold, the arrears due from it.	If only a share is to be sold, the arrears due from it.
1	2	3	4	5	6	7	8	9
		Rs a. p				Rs a. p		Rs. a. p.
224-Rcs.	Batasan O'Gayraha Batasan.	42,121 7 7	No	16 annas share of mauza Abhirampur Gayraha, Groups A and B. 8 annas share of mauza Abhirampur Gayraha, Groups C, D and E. All other shares besides that specified will be excluded from the sale.	Srimat Banwari Mukunda Das Nandi (Deb), sebait of Kishori Banawariji Thakur and others.	30,232 6 2		446 0 0

This notice is issued in respect of instalments of revenue due on or before the 31st Jaistha, 1343 B.S., of which the latest date of payment was 29th June 1936, A.D.

Rangpur, the 28th August 1936.

[ILLEGIBLE], *for* Collector.

Notification A.

NOTICE is hereby given, under sections 6 and 13, Act XI of 1859, that the undermentioned estates and shares of estates in the district of Rajshahi, will be put up for sale at the office of the Collector of that district on the 23rd September 1936, at 12 noon, for arrears of revenue (and other demands which by law are realisable as arrears of land revenue).

When in columns 5, 7 and 9 of the following statement it is stated that only a share is to be sold, it is to be understood that a separate account is kept for that share : —

Tauzi No.	Name of mahal and pargana.	Sadar jama of whole estate.	Whether the whole estate is to be sold.	If only a share is to be sold, specification of such share or shares.	Names of proprietors of property to be sold.	If only a share is to be sold, the sadar jama of such share.	If the whole estate is to be sold, the arrears due from it.	If only a share is to be sold, the arrears due from it.
1	2	3	4	5	6	7	8	9
		Rs. a. p.				Rs. a. p.	Rs. a. p.	Rs. a. p.
179	Kasimpur, pargana Kasimpur.	1,937 15 0	No ..	S. A. No. 2—18 g. 2 kr. 2 dt	Mohini Kanta Choudhuri and others.	110 6 0	..	L. R.— 41 5 0
				S. A. No. 5—2 as. 15 g. 1 kr. ½dt.	Nikunja Behari Choudhuri and others.	333 11 0	..	L. R.— 377 9 0
				S. A. No. 7—1 a. 5 g. 1 c. $1^{11}/_{12}$ dt.	Narendra Nath Choudhuri and others.	242 2 0	..	L. R.— 34 0 0
				All other shares besides those specified above will be excluded from the sale.				
222	Shibdebpara, pargana Tegachi.	2,515 9 0 Police — 25 10 0	No ..	Ejmali share—7 as. 10g.	Khandakar Fazle Kadir Abu Jamin and others.	1,170 3 0 Police— 12 0 0	..	L. R.— 191 9 6 Police— 0 5 11
				S. A. No. 1—2 as. 10 g. 1 c. 1 kr. 2½ dt. $^{9}/_{21}$ job.	Mahamad Abdul Hamid and others.	396 3 6 Police — 3 14 6	..	L. R.— 13 0 3
				S. A. No. 2—4 annas ..	Bibi Hafejatan Nessa Ummatan Fatema Choudhurani.	628 14 0 Police — 6 7 0	..	L. R.— 265 0 0
				S. A. No. 5—10 gandas	Choudhuri Ahamad Abdul Wasay.	78 9 9 Police — 0 12 10	..	L. R.— 0 4 0 Police 0 2 10
				All other shares besides those specified above will be excluded from the sale.				
229	Dihi Simulia, pargana Tegachi.	1,703 13 0 Police — 12 13 0	No ..	Ejmali share 12 annas	Bhubaneswar Singh and others.	325 0 0 Police— 2 8 0	..	L. R.— 2 15 1 Police— 0 5 3
				The above share is in respect of mauza Sreepur.				
				S. A. No. 2—4 annas ..	Anadi Prasanna Datta, sebait of Iswari Joy Kali Thakurani and others.	317 10 0 Police— 2 6 0	..	L. R.— 34 5 0 Police— 0 10 0
				The above share is in respect of mauzas Paharpur and others.				
				All other shares besides those specified above will be excluded from the sale.				
230	Dihi Dhankora, pargana Tegachi.	4,556 15 0 Police— 10 11 0	No ..	Ejmali share 1 a. 17 g. $18\frac{13399}{15066}$ til.	Syed Mahamad Abdulla and others.	524 5 0 Police— 1 2 3	..	L. R.— 15 8 6
				S. A. No. 6—2 as. 9 g. 1 c. 2 kg.	Maulvi Mohamed Choudhury Nural Haq Abul Faiz.	703 6 0 Police— 1 9 0	..	L. R.— 238 8 0
				S. A. No. 7—2 as. 9 g. 1 c. 2 kg.	Bibi Hafejatan Nessa Ummatan Fatema Choudhurani.	703 8 0 Police— 1 10 0	.	L. R.— 320 5 0
				S. A. No. 8—1 a. 1 g. 2 c. 1 kg. 10 til.	Haji Khandakar Maulvi Md. Muhasin Khan Bahadur and others.	307 13 0 Police — 0 11 0	..	L. R.— 124 12 6
				S. A. No. 9—1 a. 1 g. 2 c. 1 kg. 10 til.	Khandakar Fazle Kader Abu Jamin and others.	307 13 0 Police — 0 11 0	..	L. R.— 111 4 3
				S. A. No. 19—6 g. 2 kg. $15^{3}/_{5}$ til.	Choudhuri Ahamad Abdul Wasay.	88 0 0 Police— 0 3 5	..	L. R.— 11 6 0
				All other shares besides those specified above will be excluded from the sale.				

Tauzi No.	Name of mahal and pargana.	Sadar jama of whole estate.	Whether the whole estate is to be sold.	If only a share is to be sold, specification of such share or shares.	Names of proprietors of property to be sold.	If only a share is to be sold, the sadar jama of such share	If the whole estate is to be sold, the arrears due from it.	If only a share is to be sold, the arrears due from it.
1	2	3	4	5	6	7	8	9
		Rs. a. p.				Rs. a. p.	Rs. a. p.	Rs. a. p.
254	Dihi Bansila, pargana Gobindapur.	3,918 2 0 Police— 39 8 0	No .	Ejmali share 4 annas	Nirod Bala Debi, sebait of Sree Sree Iswar Salagram Silla Bigraha Deb Thakur.	979 8 0 Police— 9 14 0	..	L. R.— 104 15 0 Police— 2 7 0
				S. A. No. 3—2 as. 10 g.	Srish Chandra Sanyal.	612 8 0 Police— 6 3 0	..	L. R.— 65 9 0 Police— 1 8 0
				All other shares besides those specified above will be excluded from the sale.				
274	Sujanagar, pargana ditto.	5,054 7 0 Police— 33 1 0	No ..	Ejmali share -4 annas	Maharaja Bahadur Singh.	1,263 9 6 Police— 8 5 0	..	L. R. 140 1 0 Police— 0 9 0
				All other shares besides that specified above will be excluded from the sale.				
288	M. Ghasigaon and others, pargana Bongaon Khalisa.	2,067 1 0 Police— 22 6 0	No. ..	Ejmali share —10 annas	Md. Makbul Haq Choudhury and others.	1,291 15 0 Police 13 15 0	..	L. R.— 14 5 9 Police— 0 0 3
				All other shares besides that specified above will be excluded from the sale.				
303	Dhamin, pargana ditto.	2,195 0 1	No. ..	Ejmali share —6 as. 16 g	Khandaker Md. Mohasin and others.	933 4 2	..	L. R.— 68 5 0
				S. A. No. 1—2 as. 11 g. 3 c. 2 13/36 dt. 2 6/: 1 Job.	Syed Md. Abdulla and others.	355 11 9	..	L. R.— 13 6 0
				S. A. No. 1—10 gandas	Choudhury Ahamed Abdul Wasay.	68 9 6	..	L. R.— 5 2 0
				S. A. No. 6—4 as. 14 g.	Bibi Wasiatan Nessa Ummatan Ayesha Choudhurani.	644 12 6	..	L. R.— 142 10 6
				All other shares besides those specified above will be excluded from the sale.				
304	Johanabad, pargana Dhamin	792 0 0	Whole	..	Nalinakshi Choudhury, executrix to the estate of late Gokul Chandra Choudhury.	..	L. R.— 100	..
307	Dhamin, pargana Dhamin.	4,298 9 9	No ..	Ejmali share—7 as. 6g. 1 kg. 16 ½ till.	Hira Lal Ghosh and others.	1,962 9 9	..	L. R.— 149 11 6
				All other shares besides that specified above will be excluded from the sale.				
430	Dihi Brichapila, pargana Tappe Chapila.	3,274 11 0	No .	Ejmali share— 3 as. 10g.	Syed Sha Abdul Ali Abu Mojahar and others.	716 5 6	..	L. R.— 227 4 6
				S. A No. 1 - 2 as. 12 g. 1 c. 2 dt. 1 6/31 Job.	Khandaker Fazle kadir Abu Jamin and others	535 5 0	..	L. R.— 96 8 3
				S. A. No. 4— 10 gandas	Choudhuri Ahamed Abdul Wasay.	102 5 6	..	L. R.— 8 15 11
				S. A. No. 5 1 annas	Maulvi Choudhuri Md. Nural Haq Abul Faiz and others	818 10 9	..	L. R.— 241 2 9
				S. A. No. 6 4 annas	Bibi Hafijatan Nessa Ummatan Fatema Choudhurani.	818 10 9	..	L. R.— 91 15 0
				All other shares besides those specified above will be excluded from the sale.				
433	Dihi Hrisil Nangaon, pargana Chapila	802 6 0 Police— 6 6 0	No.	Ejmali share 3 as. 10g. ..	Khandakar Md. Fazle Kadir Abu Jamin and others.	174 11 6 Police— 1 5 6	..	L. R.— 43 3 7
				S. A. No. 1—3as. 16 g. 3 c. 2 kr.	Md. Abdul Hamid Motowali to the estate of Dolwar Hossain Wakf Estate.	193 12 0 Police— 1 9 0	..	L. R.— 11 4 9

Tauzi No.	Name of mahal and pargana.	Sadar jama of whole estate.	Whether the whole estate is to be sold.	If only a share is to be sold, specification of such share or shares.	Names of proprietors of property to be sold.	If only a share is to be sold, the sadar jama of such share.	If the whole estate is to be sold, the arrears due from it.	If only a share is to be sold, the arrears due from it.
1	2	3	4	5	6	7	8	9
		Rs. a. p.				Rs. a. p.	Rs. a. p.	Rs. a. p.
				S. A. No. 2—4 annas	Choudhury Md. Golam Mortuja and others.	200 9 0 Police— 1 10 0	..	L. R.— 21 11 0
				S. A. No. 4.—4 annas ..	Maulvi Choudhury Md. Nural Haq Abul Faiz and others.	200 9 0 Police— 1 9 6	..	L. R.— 21 9 2 Police— 0 4 5
				All other shares besides those specified above will be excluded from the sale.				
483	Ispenjarpur *alias* Danisha, pargana Mohamedpur.	4,710 14 0	Whole	....	Dharani Kumar Ghose and others.	..	L. R.— 537 2 0	..
1845	Jiasundhu, pargana ditto.	6,411 5 0 Police— 64 4 0	No ..	Ejmali share—14 as. 11 g. 2 c. 2 kr.	Prafulla Kumar Basak and others.	5,843 10 0 Police— 58 9 0	..	L. R.— 66 15 2
				All other shares besides that specified above will be excluded from the sale.				
2239	Bongaonjalgli, pargana ditto.	1,823 10 0 Police— 13 5 0	Whole	....	Kishori Mohon Choudhury and others.	..	L. R.— 103 6 3 Police— 2 13 3	..
2278	Dihi Puthia, pargana Mohamadpur.	1,636 1 0	Do. ..	....	Maulvi Choudhury Md. Nural Haq Abul Faiz and others.	..	L. R.— 471 11 3	..
2279	Ditto ..	1,636 1 0	Do. ..	....	Choudhury Golam Mortuja and others.	..	L. R.— 135 7 6	..
2280	Ditto ..	715 13 0	Do. ..	....	Khandakar Fazle Kadir Abu Jamin and others.	..	L. R.— 261 0 6	..
2281	Ditto ..	715 13 0	Do. ..	....	Syed Sha Md. Abdul Hafez and others.	..	L. R.— 351 4 6	..
2361	Dihi Rona Bari including Parisow, pargana Mohamadpur.	1,507 1 7 Police— 11 0 0	No ..	Ejmali share—14 annas	Choudhury Md. Jille Kadir and others.	1,318 11 7 Police— 9 10 0	..	L. R.— 635 4 5 Police— 3 1 10
				S. A. No. 1.—2 annas	Choudhuri Md. Abdul Azim Abu Ahamad *alias* Abul Moktar and others.	186 6 0 Police— 1 6 0	..	L. R.— 4 1 6
				All other shares besides those specified above will be excluded from the sale.				

This notice is issued in respect of all the tauzis mentioned above with regard to instalments of revenue due on or before 31st Jaistha, 1343 B.S., of which the latest date of payment was 30th June 1936, and in respect of tauzi Nos. 179/2, 179/5, 222Ej., 222/2, 229Ej., 230/6, 230/7 230/8, 230/9, 303/6, 430Ej., 430/1, 430/5, 433Ej., 2278, 2280, 2281 and 2361 Ej. for instalments of revenue due on or before 29th Falgoon, 1342 B.S., of which the latest date of payment was 28th March 1936, and in respect of tauzi Nos. 179/5, 2281 for instalments of revenue due on or before 30th Agrahayan, 1342 B.S., of which the latest date of payment was 13th January 1936, and in respect of tauzi No. 179/5 for instalments of revenue due on or before 30th Falgoon, 1341 B.S., 32nd Jaistha and 31st Bhadra, 1342 B.S., of which the latest dates of payments were 28th March 1935, 28th June and 28th September 1935, respectively, and in respect of tauzi Nos. 179/7 for instalments of revenue due on or before 32nd Jaistha, 1341 B.S., of which the latest date of payment was 28th June 1934.

Rajshahi, the 22nd August 1936. K. K. HAJARA, Collector.

Notification A.

NOTICE is hereby given under sections 6 and 13, Act XI of 1859, that the undermentioned estates and shares of estates in the district of Burdwan will be put up for sale at the office of the Collector of that district on the 24th September 1936, at 12 noon, for arrears of revenue and other demands, which by law are realizable as arrears of land revenue.

When in columns 5, 7 and 9 of the following statement it is stated that only a share is to be sold, it is to be understood that a separate account is kept for that share :—

Tauzi No.	Name of mahal and pargana.	Sadar jama of whole estate.	Whether the whole estate is to be sold.	If only a share is to be sold, specification of such share or shares.	Names of proprietors of property to be sold.	If only a share is to be sold, the Sadar jama of such share.	If the whole estate is to be sold, the arrears due from it.	If only a share is to be sold, the arrears due from it.
1	2	3	4	5	6	7	8	9
		Rs. a. p.				Rs. a. p.	Rs. a. p.	Rs. a. p.
6237	Kalyanpur, pargana Ambika.	863 10 4	Whole ..	....	Eutaz Ali Sarcar and others.	..	325 3 0 March 1936 210 9 7 June 1936— 114 9 5 325 3 0	..
101	Chandpur, pargana Amirabad.	1,740 8 3	Do. ..	....	Indoo Bhusan Mallik and others.	..	52 4 10 March 1936— 0 12 7 June 1936 51 8 3 52 4 10	..
179	Musthal, pargana Aurangabad.	2,161 13 11	..	Residuary—4 annas. All other shares than that specified will be excluded from the sale.	Hori Lal Saha and others.	615 7 5	Police Revenue— 4 12 9 ..	91 1 0
19	Gidhgram, pargana Arsha.	7,308 12 0	..	S. A. No. 12—1 a. 6 g. 2 k. 2 cr. All other shares than that specified will be excluded from the sale.	Sidheswar Banerjee and others.	609 3 0	..	76 4 9
20	Bishnupur, pargana Bagha.	62,970 13 0	..	S. A. No. 5—13 g. 2 k. 2 cr. All other shares than that specified will be excluded from the sale.	Dina Nath Tewari and others.	2,694 1 0	..	1,288 0 0 January 1936— 66 0 0 March 1936— 922 0 0 June 1936— 300 0 0 1,288 0 0
21	Mahata, etc., pargana Bagha.	11,669 3 0	..	Residuary—13 as. 16 g. 1 k. 2½ dt. All other shares than that specified will be excluded from the sale.	Brojendra Lal Dass and others.	10,288 1 3	..	28 9 0
				S. A. No. 2—1a. 5g 3k. 2cr. 1½dt. All other shares than that specified will be excluded from the sale.	Satindra Nath Panja and others.	947 11 9		124 14 7 March 1936— 83 13 0 June 1936— 41 1 7 124 14 7
93	Kasul, pargana Benodenager.	1,399 7 6	Whole ..	....	Bonkesh Sanyal and others.		755 8 0 January 1936— 186 15 5 March 1936— 480 0 1 June 1936— 88 8 6 755 8 0	..
24	Kashinathpur etc., pargana Dhenya.	3,192 15 0	.	Residuary 8as. 13g. 1k. 1cr.	Indoomati Debi, guardian of Baidya Nath Roy.	1,729 8 0	..	680 7 7½ March 1936 462 5 5 June 1936— 218 2 2½ 680 7 7½
				S. A. No. 2—5as. 6g. 2k. 2cr. All other shares than that specified will be excluded from the sale.	Panchugopal Mukherjee.	1,061 5 0	..	438 4 11½ March 1936— 304 1 2 June 1936— 134 39 9½ 438 4 11½
49	Srikhandia, pargana Dhenya.	6,202 9 7	Whole ..	....	Bibhuti Chand Kapoor.	..	868 8 0	..

Tauzi No.	Name of mahal and pargana.	Sadar jama of whole estate.	Whether the whole estate is to be sold.	If only a share is to be sold, specification of such share or shares.	Names of proprietors of property to be sold.	If only a share is to be sold, the Sadar jama of such share.	If the whole estate is to be sold, the arrears due from it.	If only a share is to be sold, the arrears due from it.
1	2	3	4	5	6	7	8	9
		Rs. a. p.				Rs. a. p.	Rs. a. p.	Rs. a. p.
64	Jageswardihi, pargana Dhenya.	3,953 6 0	..	S. A. No. 1—8 annas All other shares than that specified will be excluded from the sale.	Bibhuti Bhusan Paul Choudhury and others.	1,976 11 0	..	254 1 1
62	Palsona, pargana Dhenya.	7,400 11 11	..	Residuary—8as. 0g. 2cr. ½dt.	Suprovat Chandra and others.	3,843 5 11	..	3,163 3 4 March 1936— 185 0 9 September 1935— 13 2 0 January 1936— 1,270 8 6 March 1936— 1,247 0 3 June 1936— 447 7 1 3,163 3 4
				S. A. No. 1—2 annas	Ditto	925 1 6	..	Police Revenue— 48 11 7 362 13 3 March 1936— 242 2 2 June 1936— 120 11 1 302 13 3
				S. A. No. 5— 1a. 5g. 2½dt.	Dhanapati Chandra and others.	579 12 9	..	Police Revenue— 1 11 8 272 6 11 January 1936— 88 12 11 March 1936— 133 3 0 June 1936— 50 7 0 272 6 11
				S. A. No. 7—1a. 2g. 1k. 1cr. 3½dt. All other shares than that specified will be excluded from the sale.	Monoroma Dasi	518 12 0	..	67 0 0
5171	Haldi, etc., pargana Burdwan.	1,559 0 0	Whole..	....	Panchugopal Mukherjee.	..	621 13 6	..
5174	Salkuni, pargana Burdwan.	1,687 4 6	..	Residuary—8 annas of mauzas Dhandalau, Kumrun, Salkuni and Mandarbati. All other shares than that specified will be excluded from the sale.	Kazi Mohamad and others.	839 5 6	..	373 9 0
5248	Deypara, pargana Burdwan.	787 7 0	Whole..	....	Panchugopal Mukherjee and others.	..	312 15 0	..
80	Kaitara, pargana Champainagar.	1,890 8 6	Do. ..	....	Pulin Chandra Dawn.	..	384 8 6	..
27	Sahapur, pargana Jahangirabad.	8,506 3 0	Do. ..	....	Bhola Nath Saha and others.	..	6,276 0 6	..
75	Nimdaha, etc., pargana Jahangirabad.	8,789 0 7	..	Residuary—15 as. 3 g. 2 k. 2 cr. All other shares than that specified will be excluded from the sale.	Charu Chandra Saha.	8,338 5 7	..	1,089 9 0
114	Chhutipur Deopoora *alias* Kischhutipara, pargana Chhutipur.	990 6 5	Whole..	....	Durgesnandini Debi as sebait of Ram Sita Jew Sridhar Jew and Siba Thakur.	..	301 8 8	..
115	Kischhutipur *alias* Chhutipur, pargana Chhutipur.	1,917 12 4	..	Residuary—5 as. 6 g. 2 k. 2 cr.	Jogendra Chandra Basu Choudhury and others.	639 4 1	..	27 5 5
				S. A. No. 1—5 as. 6 g. 2 k. 2 cr. All other shares than that specified will be excluded from the sale.	Atal Behari Basu Choudhury and others.	639 4 1½	..	9 13 1½

Tauzi No.	Name of mahal and pargana.	Sadar Jama of whole estate.	Whether the whole estate is to be sold.	If only a share is to be sold, specification of such share or shares	Names of proprietors of property to be sold	If only a share is to be sold, the Sadar Jama of such share.	If the whole estate is to be sold, the arrears due from it	If only a share is to be sold, the arrears due from it.
1	2	3	4	5	6	7	8	9.
		Rs. a. p.				Rs a. p.	Rs. a. p.	Rs. a. p.
116	Kischhutipur *alias* Chhutipur, pargana Chhutipur.	553 8 8	Whole ..	..	Golam Nabi Sarcar and another as Motowalli.	..	171 11 10 March 1936 127 1 0 June 1936 44 10 10 171 11 10	..
118	Ditto .	553 8 8	Do. ..	.	Suresh Chandra Mitra and others.	..	290 8 7 September 1935 22 9 8 January 1936 138 7 5 March 1936 120 7 6 290 8 7	..
119	Ditto ..	553 8 8	Do. ..	....	Golam Nabi Sarcar and others as Motowalli.	..	170 10 9	..
124	Chandipur, pargana Chhutipur.	820 4 2	Do. ..	.. .	Durgesh Nandini Debi and another.	..	90 10 7	..
135	Gouripur, pargana Chhutipur.	1,210 5 9	..	Residuary 7 as. 7 g. 55620 1 k. 2 dt. 234117 All other shares than that specified will be excluded from the sale.	Nitya Gopal Singha and others.	561 5 9	..	7 1 2
6238	Ram Krishnapur, pargana Kutubpur.	2,631 12 0	.	Residuary 8 annas	Bishweswarnath Saha and others.	1,315 14 0	.	330 6 0 March 1936 218 8 0 June 1936 125 14 0 330 6 0
				8 A. No. 1—8 annas All other shares than that specified will be excluded from the sale.	Jnanendra Narayan Chowdhury and others as sebait of Radhagobinda Jew Thakur.	1,315 14 0	.	360 6 0 March 1936 243 8 0 June 1936— 125 14 0 360 6 0
65	Majedalia, pargana Patuli.	9,381 6 9	..	S. A. No. 1—2as. 13g. 1k. 1cr.	Ram Ranjan Mallik and others.	1,566 9 6	..	469 7 8 March 1936 265 1 0 June 1936— 204 6 8 469 7 8
				S. A. No. 2—2as. 13g. 1k. 1cr.	Sibaram Chakravarty.	1,566 9 6	..	544 6 2 March 1936— 339 15 0 June 1936— 204 6 8 544 6 2
				S. A. No. 6—1a. 15 g. 2 k. 2 dt.	Anilo Prosad Mallik.	1,044 6 6	.	749 13 3 March 1936— 749 13 3
				S. A. No. 7—1a. 15 g 2 k. 2 dt. All other shares than that specified will be excluded from the sale.	Panchu Gopal Chakravarty.	1,044 10 2	..	316 5 11 March 1936— 180 1 0 June 1936 136 4 11 316 5 11
72	Patuli, pargana Patuli	5,786 12 3	..	S. A. No. 3—2as. 13 g. 1 k. 1cr. All other shares than that specified will be excluded from the sale.	Surendrabala Debi.	964 7 5	.	418 2 5 March 1936 292 7 2 June 1936— 125 11 3 418 2 5
107	Islampur, etc., pargana Mandarpur.	3,957 12 9	..	S. A. No. 3—4as. 13 g. 1 k. 1 cr. 1½dt.	Ashutosh Chandra Mitra as sebait of Lakshmi Narayan Radharaman and Radhika Jew.	1,154 11 0	..	31 11 1
				S. A. No. 4—3as. 3g. 2k. 1cr. ½dt. All other shares than that specified will be excluded from the sale.	Ashutosh Chandra Mitra and others.	786 8 0	.	31 11 5

Tauzi No.	Name of mahal and pargana.	Sadar jama of whole estate.	Whether the whole estate is to be sold.	If only a share is to be sold, specification of such share or shares.	Names of proprietors of property to be sold.	If only a share is to be sold, the Sadar jama of such share.	If the whole estate is to be sold, the arrears due from it.	If only a share is to be sold, the arrears due from it.
1	2	3	4	5	6	7	8	9
		Rs. a. p.				Rs. a. p.	Rs. a. p.	Rs. a. p.
51	Berowa, pargana Ranihati.	2,486 11 0	Whole ..	....	Jamini Mohan Nandi Choudhury and others.	..	87 2 0	..
79	Kismat Bhowanipur, pargana Ranihati.	797 14 0	Do. ..	....	Baidya Nath Chatterjee.	..	97 1 5	..
170	Santoshpur, pargana Raipur.	638 6 6	Do. ..	....	Sankar Kinkar Hazra and others.	..	69 13 11	..
178	Sahapur, pargana Raipur.	501 0 8	Do. ..	....	Narendra Nath Sen and others.	..	444 3 5 January 1936— 190 1 9 March 1936— 154 14 1 June 1936— 90 3 7 444 3 5	..
55	Chhota Balnan, pargana Samarshahi.	3,444 0 7	..	S. A. No. 1—10 as. 13 g. 1 k. 1 cr. All other shares than that specified will be excluded from the sale.	Jogot Durlav Shome.	2,296 0 5	..	490 0 6 March 1936— 190 10 7 June 1936— 299 14 11 490 9 6
158	Samudragarh, pargana Satsaika.	2,709 12 6	Whole ..	....	Kumar Krishna Nandi Choudhury and others.	..	57 8 0	..
159	Ashuri, pargana Satsaika.	2,260 9 11	Do. ..	....	Abdul Ohid Bara and others.	..	52 8 7 March 1936— 5 7 10 June 1936— 47 0 9 52 8 7	..
5296	Kasha, pargana Satsaika.	3,677 4 4	Do. ..	....	Choudhury Md. Amin and others.	..	440 4 2 March 1936— 285 10 6 June 1936— 154 9 8 440 4 2	..
5297	Ranthgram, pargana Satsaika.	2,121 15 8	Do. ..	....	Motowalli Fatema Khatoon.	..	312 5 8 March 1936— 222 11 2 June 1936— 89 10 6 312 5 8	..
5170	Dahukadanga, pargana Sahabad.	6,421 15 8	..	S. A. No. 1—2 as. 13 g. 1 k. 1 cr.	Indoomati Debi as guardian of minor Baidya Nath Rai.	1,070 5 4	..	425 12 2 March 1936— 283 14 2 June 1936— 141 14 0 425 12 2
				S. A. No. 2—1 a. 13 g. 1 k. 1 cr.	Chinmoyee Debi as trustee to the estate of Saitendra Kumar Rai and others.	1,070 5 4	..	425 12 2 March 1936— 283 [illegible] June 1936— 141 14 0 425 12 2
				S. A. No. 3—2 as. 13 g. 1 k. 1 cr. All other shares than that specified will be excluded from the sale.	Panchu Gopal Mukherjee.	1,070 5 4	..	455 3 4 March 1936— 313 5 4 June 1936— 141 14 0 455 3 4

This notice is issued in respect of instalments of revenue due on or before the 31st Jaistha, 1343 B.S., of which the latest date of payment was 29th June 1936 and also of revenue due on or before the 29th Falgoon, 1342 B.S., and 31st Jaistha, 1343 B.S., of which the latest date of payment was 28th March and 29th June 1936 in respect of Tauzi Nos. 6237, 101, 21-2, 24R., 24-2, 62-1, 116, 6238R., 6238-1, 65-1, 65-2, 65-6, 65-7, 72-3, 55-1, 159, 5296, 5297, 5170-1, 5170-2, 5170-3 and also of revenue due on or before the 30th Agrahayan, 29th Falgoon, 1342 B.S. and 31st Jaistha, 1343 B.S., of which the latest date of payment was 13th January, 28th March and 29th June 1936 in respect of Tauzi Nos. 20-5, 93, 62R., 62-5, 118 and 178.

Burdwan, the 21st August 1936.

I. B. NAG, *for* Collector.

Notification of Sale.

NOTICE is hereby given, under sections 6 and 13, Act XI of 1859, that the undermentioned estates and shares of estates in the district of Murshidabad will be put up for sale at the office of the Collector of that district on the 26th September 1936, at 12 noon, for arrears of revenue (and other demands which by law are realizable as arrears of land revenue).

When in columns 5, 7 and 9 of the following statement it is stated that only a share is to be sold, it is to be understood that a separate account is kept for that share :—

Tauzi No.	Name of mahal and pargana.	Sadar jama of whole estate.	Whether the whole estate is to be sold.	If only a share is to be sold, specification of such share or shares.	Names of proprietors of property to be sold.	If only a share is to be sold, the sadar jama of such share.	If the whole estate is to be sold, the arrears due from it.	If only a share is to be sold, the arrears due from it.
1	2	3	4	5	6	7	8	9
		Rs. a. p.				Rs. a. p.	Rs. a. p.	Rs. a. p.
5	Dihi Kutabpur, pargana Siberpur.	..	No ..	Residuary share—1a. 7g. 1c. 3 til.	Syed Abdul Ohid ..	610 12 2 Police— 1 14 5	..	443 0 2 Police— 2 8 5
				S. A. No. 3, share 1a. 4g. 3c. 16 til.	Syed Abu Asgar and others.	555 11 10 Police— 4 3 11	..	141 3 11 Police— 1 0 11
				S. A. No. 4, share 1a. 4g. 3c. 18 til.	Ditto ..	555 11 10 Police— 4 3 11	..	141 3 11 Police— 1 0 11
				S. A. No. 12, share 1a. 18g. 3c. 2kr. 9 til. All other shares besides that specified will be excluded from the sale.	Syed Md. Abdul Hafiz.	872 5 8 Police— 6 10 9	..	371 9 8 Police— 1 11 4
9	Kashipur, pargana Kashipur.	..	No ..	S. A. No. 5, share 1a. 18g. 2kr. 17 til. All other shares besides that specified will be excluded from the sale.	Sailesh Kumari Sing and others.	964 0 0	..	931 0 1
12	Kutabpur, pargana Kutabpur.	2,301 1 1	Whole	....	Maulvi Golam Gous and others, joint Mutwalli.	..	858 13 3	..
13	Kulberia, pargana Kulberia.	..	No ..	Residuary share—8 annas. All other shares besides that specified will be excluded from the sale.	Nani Gopal Chakrabarti as sebait.	1,865 14 7	..	106 10 8
14	Ditto ..	631 14 4	Whole	....	Rasewari Chaudhurani as mother and guardian of her minor adopted son Sashanka Bhusan Choudhuri.	..	167 0 0	..
21	Ditto ..	..	No ..	S. A. No. 12, share 7a. 1g. 2c. 12 til. All other shares besides that specified will be excluded from the sale.	Tara Kinkor Chandra.	534 7 4	..	327 3 7
25	Kismat mauza Koriora, pargana Behar-le.	..	No ..	Residuary share 12 annas. All others shares besides that specified will be excluded from the sale.	Tarangini Debi, executrix to the estate of Kedar Nath Bagchi and others.	890 14 3	..	960 6 3
52	Karya Benodbati, pargana Gheasabad.	500 0 0	Whole	....	Sudhakar Dhar and others	..	37 8 0	..
55	Khargram, pargana Khargram.	..	No ..	S. A. No. 18, share 3a. 12g. 1c. 1kr. 5til. All other shares besides that specified will be excluded from the sale.	Mohadeb Roy Choudhury and others.	535 14 4	..	212 6 2
56	Ditto ..	..	No ..	Residuary share—4a. 3c. 10 til.	Dhanada Prosad Roy Choudhury.	572 14 7	..	22 9 3
70	Dihi Gankar Charka, pargana Gankar.	..	No. ..	Residuary share—3as. 10g 1c. 1kr.	Priya Gopal Dhar and others, sebaits.	3,484 2 9 Police— 63 1 10	..	3,088 4 6 Police— 63 1 10
				S. A. No. 1, share 3as. 16g. 2kr. 14 til.	Gobinda Das Nath as sebait.	3,482 15 0 Police— 63 0 2	..	3,022 3 0 Police— 63 0 2
				S. A. No. 2, share 3as. 16g. 2kr. 13 til.	Shyama Charan Nath as sebait.	3,482 15 0 Police— 63 0 3	..	3,011 2 1 Police— 31 8 3
				S. A. No. 3, share 3as 16g. 2kr. 13 til.	Radha Ballav Nath as sebait.	3,482 15 0 Police— 63 0 2	..	3,011 2 1 Police— 31 8 1
				S. A. No. 4, share 15 gandas. All other shares besides that specified will be excluded from the sale.	Sarojini Bala Dasi as mother and guardian of Sailendra Kumar Borsi and others.	685 3 3 Police— 12 6 5	..	895 3 3 Police— 9 4 9

Tauzi No.	Name of mahal and pargana.	Sadar jama of whole estate.	Whether the whole estate is to be sold.	If only a share is be sold, specification of such share or shares.	Names of proprietors of property to be sold.	If only a share is to be sold, the sadar jama of such share.	If the whole estate is to be sold, the arrears due from it.	If only a share is to be sold, the arrears due from it.
1	2	3	4	5	6	7	8	9
		Rs. a. p.				Rs. a. p.	Rs. a. p.	Rs. a. p.
71	Dihi Gangedda, pargana Gankar.	..	No	S. A. No. 1, share 1 las. 17 g. 3 c. 2 kr. 10 til All other shares besides that specified will be excluded from the sale.	Krishna Gobinda Bhoumik as Common Manager.	1,948 4 0	..	97 13 9
72	Ditto ..	..	No	S. A. No. 2, share 6 as. 9 g. 2 kr. 4 til. All other shares besides that specified will be excluded from the sale.	Naba Kumar Singha Dudhuria and another.	1,055 0 0 Police— 19 7 6	..	50 10 10 Police— 4 12 9
86	Gathia Harinathbati, pargana Dayanagar.	1,539 12 11	Whole	....	Mohini Mohan Sarkar as sebait.	..	70 6 5	..
91	Ganja Raipur, pargana Gosa.	618 10 11	Do. ..	....	Hiatannessa Begum	..	43 10 11	..
118	Mauza Chamunda, pargana Muraripur.	756 5 8	Do. ..	....	Kali Charan Singha and others.	..	257 9 9	..
165	Taraf Telia Noapara, pargana Gankar.	2,659 2 11	Do. ..	....	Ditto ..	..	3,641 11 5	..
167	Pargana Dayanagar, pargana Dayanagar.	..	No ..	Residuary share, 12 annas. All other shares besides that specified will be excluded from the sale.	Hare Krishna Dhar and others.	7,193 1 6	..	5,761 2 1
172	Mauza Daspara, pargana Sahajadpur.	1,175 8 8	Whole	....	Pramatha Nath Basu Sarbadhikari and others.	..	481 8 11	..
254	Pargana Fatesing, pargana Fatesing	..	No ..	S. A. No. 1, share 3 as. 4 g. S. A. No. 4, share 3 as. 4 g. All other shares besides that specified will be excluded from the sale.	Khitindra Narayan Roy and others. Anilabala Debi as executrix to the estate of Rajendra Narayan Roy.	9,269 2 8 9,269 2 6	.. ..	518 2 10 2,697 4 1
279	Mauza Basudevkhali, pargana Mahalandi.	..	No ..	S. A. No 1, share 3 as 5 g 2 c 5 til. All other shares besides that specified will be excluded from the sale.	Khagendra Behari Dutta and others.	547 11 0	..	165 9 7
307	Bejpara, pargana Chunakhali.	506 0 6	Whole	....	Maulvi Golam Gous and others as joint matwali.	..	13 13 9	..
323	Bagha Mitrapur, pargana Nowanagar	663 9 6	Do. ..	....	Nital Chandra Biswas as sebait.	..	228 10 2	..
327	Kismat Baintali, pargana Baintali.	2,561 1 1	Do. ..	....	Kali Charan Singha as sebait	..	750 10 5	..
328	Ditto ..	2,316 8 9	Do. ..	....	Ditto ..	..	903 7 8	..
332	Huda Bhawanipur, pargana Akharshahi.	..	No ..	Residuary share, 6 as 8 g. All other shares besides that specified will be excluded from the sale	Bhola Nath Bagchi as sebait.	1,085 11 0	..	1,164 5 6
340	Mandalshar Dihi, pargana Sherpur.	2,118 1 1 Police— 16 3 4	Whole	....	Mohini Mohan Sarkar as sebait.	..	550 15 2 Police— 3 3 3	..
342	Dihi Monaikandra, pargana Sherpur.	..	No ..	Residuary share, 2 as 13 g. 1 c. 1 kr. S. A. No 2, share 5 as. 6 g. 2 c. 2 kr. S A. No. 3, share 6 as. 6 g. 2 c, 2 kr. All other shares besides that specified will be excluded from sale.	Nabendu Narayan Roy Choudhury as sebait. Bishnupada Misra as sebait. Monojendra Narayan Roy Choudhury as sebait.	575 7 0 Police— 4 6 5 1,150 14 0 Police— 8 12 11 1,150 14 0 Police— 8 12 11	.. .. ..	413 14 6 Police— 2 3 3 611 7 7 Police— 2 3 4 876 10 10 Police— 4 6 7
345	Mohanpur Pargana Kismat, pargana Mohanpur.	4,390 11 0	Whole	....	Bholanath Bhattacharjee as Receiver to the estate of Ashit Mohan Ghose Moulik and others as sebaits.	..	3,570 6 9	..

Tauzi No.	Name of mahal and pargana.	Sadar jama of whole estate.	Whether the whole estate is to be sold.	If only a share is to be sold, specification of such share or shares.	Names of proprietors of property to be sold.	If only a share is to be sold, the sadar jama of such share.	If the whole estate is to be sold, the arrears due from it.	If only a share is to be sold, the arrears due from it.
1	2	3	4	5	6	7	8	9.
		Rs. a. p.				Rs. a. p.	Rs. a. p.	Rs. a. p.
346	Mohalandi Kismat Pargana, pargana Mohalandi.	..	No ..	S. A. No. 1, share 4 annas. All other shares besides that specified will be excluded from the sale.	Khagendra Behari Dutta and another.	612 14 3	..	211 13 8
353	Ditto	..	No ..	Residuary share—6 annas. All other shares besides that specified will be excluded from the sale.	Bibi Taheratannessa and others.	629 5 9	..	590 10 5
357	Madda Begombati, pargana Uzirabad.	1,112 11 7	Whole	....	Mohini Mohan Sarkar as sebait.	..	495 14 2	..
364	Mouza Masumabad, pargana Masumabad.	1,236 1 1	Do. ..	....	Radha Ballav Nath and others.	..	759 5 1	..
397	Rasulpur, pargana Sherpur.	..	No ..	S. A. No. 2, share 5 as. 5 g.	Maulvi Khandkar Md. Abu Ahasan and others.	825 10 6	..	1,019 14 6
				S. A. No. 3 share 3 as. 15 g. All other shares besides that specified will be excluded from the sale.	Bibi Siddi Katonnessa and others.	589 12 1	..	764 0 0
436	Kismat pargana Shajahanpur, pargana Shajahanpur.	..	No ..	Residuary share 9 as. 12 g. All other shares besides that specified will be excluded from the sale.	Anilabala Debi and another.	2,089 15 10	..	764 10 2
456	Samsabad, pargana Behorole.	..	No ..	S. A. No. 2, share 5 as. 5 g.	Khandakar Md. Abu Ahasan and others.	2,029 2 2	..	2,525 9 4
				S. A. No. 3, share 3 as. 15 g.	Bibi Sidde Katonnessa and others.	1,449 6 1	..	2,068 9 5
				S. A. No. 5, share 1 a. 11 g. 2 c. 2 kr. All other shares besides that specified will be excluded from the sale.	Bibi Hafizatonnessa Ummatal Fatema Choudhurani.	611 15 5	..	211 4 3
490	Hatinagar, pargana Samaskhali.	..	No ..	Residuary share 12 annas. All other shares besides that specified will be excluded from the sale.	Maulvi Golam Gous and others as joint Matwali.	1,470 14 3	..	136 12 9
495	Mouza Harishpur, pargana Kulberia.	520 0 0	Whole	....	Nirode Mohan Ghose Moulik and others.	..	40 1 1	..
508	Dihi Atal, pargana Sherpur.	..	No ..	Residuary share 8 annas.	Nilabja Prova Debi as grandmother and guardian of Kirombala Singha, mother and guardian of Amrita Gopal Singha and another, minors.	1,726 5 0 Police— 13 3 4	..	1,168 9 9 Police— 6 9 7
				S. A. No. 4, share 3 as. 6 g. 2 c. 2 kr. All other shares besides that specified will be excluded from the sale.	Sailesh Kumari Singha and others, sebaits.	719 4 9 Police— 5 8 1	..	266 13 10 Police— 1 6 1
510	Atghari, pargana Behorole.	1,013 11 9	Whole	....	Annulyalata Dasi and another.	..	412 5 2	..
515	Augram, pargana Shahajadpur.	884 13 0	Do. ..	....	Girija Sankar Chakraverty and another.	..	169 13 4	..
516	Munia Dihi, pargana Talissing.	..	No ..	Residuary share 8 annas.	Subodh Krishna Ghose Mouli and others.	3,229 1 1	..	1,398 0 1
				S. A. No. 1, share 8 annas. All other shares besides that specified will be excluded from the sale.	Saroje Krishna Ghose Maulik.	3,229 1 ½	..	947 15 11½
521	Taraf Anupnagar, Pargana Rajshahi.	..	No ..	Residuary share, 7 as. 17 g. 3 c. 1 kr. 10 til. All other shares besides that specified will be excluded from the sale.	Nani Gopal Chakravarti and others.	858 9 3	..	21 2 2

Tauzi No	Name of mahal pargana	Sadar jama of whole estate	Whether the whole estate is to be sold	If only a share is to be sold, specification of such share or shares.	Names of proprietors of property to be sold.	If only a share is to be sold, the sadar jama of such share.	If the whole estate is to be sold, the arrears due from it.	If only a share is to be sold, the arrears due from it.
1.	2	3	4	5	6	7	8	9
		Rs. a. p.				Rs. a. p.	Rs. a. p.	Rs. a. p.
593	Taraf Jiaganj, pargana Asadnagar.	1,281 3 8	Whole	....	Nabakumar Singh Dudhuria and another.	..	224 4 8	..
596	Downapur, Noanagar, pargana Dewnapur.	..	No. ..	S. A. No. 2, share 8 annas. All other shares besides that specified will be excluded from the sale.	Hirendra Nath Roy and another.	649 5 6	..	162 0 0
597	Nialishpara, pargana Mozafarpur.	1,151 8 0	Whole	....	Suresh Chandra Sen and another.	..	156 0 0	..
2738	Taraf Bhalkundi, pargana Asadnagar.	1,873 6 11	Do. ..	....	Moharaj Bahadur Sing.	..	127 13 3	..
2745	Taraf Sundalpur, pargana Asadnagar.	528 11 6	Do. ..	....	Sisir Kumar Banerjee	..	218 11 6	..
2778	Taraf Nur Mohammadpur, pargana Asadnagar.	1,257 14 8	Do. ..	....	Maulvi Golam Gous and others as joint Matwali.	..	857 14 8	..
2779	Taraf Kanaipara, pargana Asadnagar.	1,185 13 1	Do. ..	....	Kharani Kumar Ghose and others.	..	86 9 4	..
2785	Taraf Hajiganj, pargana Asadnagar.	662 15 3	Do. ..	....	Lakshmi Narayan Sen and another as joint Receiver, Dangapara estate.	..	415 7 3	..
3250	Jote Kashi, pargana Denya.	590 13 8	Do. ..	....	Munshi Zillar Rahaman.	..	78 4 0	..
584 P. II	Deara Sibnagar, pargana Laskharpur.	2,054 0 0	Do. ..	....	Naresh Narayan Roy and others.	..	12 10 6	..
1482 P. II	Madhupur in char Garibpur, pargana Kulberia.	551 0 0	Do. ..	....	Kali Prosanna Roy Chaudhury and others.	..	6 10 0	..
2758 P. II.	Char Mirzapur, pargana Plassey.	3,720 0 0	Do. ..	....	Pria Nath Ganguly	..	930 0 0	..

This notice is issued in respect of instalments of revenue which were due on or before the 31st Jaista, 1343 B. S., of which the latest date of payment was 28th June 1936 A. D.

A. HOSSAIN, *for* Collector.

Berhampore, the 22nd August 1936.

Notification.

NOTICE is hereby given, under sections 6 and 13 of Act XI of 1859, that the undermentioned estates and shares of estates in the district of 24-Parganas will be put up for sale at the office of the Collector of that district on the 21st September 1936, at 12 noon, for arrears of revenue and other demands which by law are realisable as arrears of land revenue.

When in columns 5, 7 and 9 of the following statement it is stated that only a share is to be sold, it is to be understood that a separate account is kept for that share and all other shares besides that specified will be excluded from the sale:—

Tauzi No.	Name of mahal and pargana.	Sadar jama of the whole estate.	Whether the whole estate is to be sold.	If only a share is to be sold, specification of such share or shares.	Names of proprietors of properties to be sold.	If only a share is to be sold, Sadar jama of such share.	If the whole estate is to be sold, the arrears due from it.	If only a share is to be sold, the arrears due from it.
1	2	3	4	5	6	7	8	9
		Rs. a. p.				Rs. a. p.	Rs. a. p.	Rs. a. p.
1 R.S.	Mahal Chetla, pargana Magura.	..	..	14 gds. 2 kg. 16 til in mauza Chetla. 17 gds. 2 k. 1 til 2 k. 2kt. in mauza Taraf Satgachia. 18 gds. 3 k. 2 kg. 6 til in mauza Tangtola. 7 gds. 2 k. 34 bighas and 16 cottas specified land for sl. Nos. 21 and 22 in mauza Barisha. 14 gds. 2 k. 1 kg. 9 til 2 kg. 4 til 3 k. in mauza Hatiagarh. 9 as. 12 gds. in mauzas Sibarampur and Narayanpur. 8 annas in mauzas Nurshikdar and Joyanpur. 5 as. 6 gds. 2 k. 2 kg. 13 til 1 k. 1 kt. in mauzas Sripur and Bagerghole. 4 annas in mauza Chakraju Molla. 10 as. 19 gds. 3 k. 3 kg. 9 til 3 k. 1 kt. in mauza Boinchberia.	Joygopal Das and others.	2,075 15 11	..	361 15 6¼
1/10	Ditto ..	..	..	3 k. 2 kg. 8 til in mauza Taraf Chetla. 1 gd. 1 kg. 16 til in mauza Taraf Satgachia and Tongtola. 1 gd. 2 k. in mauza Barisha. 2 gds. 3 kg. 5 til 2 k. 1 kg. 2 til 2 k. 2 kt. in mauza Hatiagarh. 3 as. 4 gds. in mauzas Bishnupur and Narayanpur. 8 annas in mauzas Nurshikdar and Joyanpur. 8 as. 13 gds. 1 k. 6 til 1 k. 1 kt. in mauzas Sreepur and Bagerghole.	Ramgopal Das and others.	808 7 1	..	140 9¼ 11
47/1	Mahal Raipur, pargana Magura.	..	..	16 annas share in mauzas Gangadhar Chak and Brojonari Chak and others.	Khagendra Nath Chakrabarty and others.	1,642 9 2	..	98 3 0
63	Mahal Bansdroni, pargana Magura.	9,058 4 2	Whole ..	....	Satyendra Kumar Sarkar and others.	..	589 12 10½	..
64/1	Ditto ..	..	..	5as. 6gds. 2c. 2kt. share in each of mauzas in No. 17 Durgapur, 18 Shalpukuria and others. 1a. 13gds. 1 c. 1kt. in each of the mauzas Chak Andharmanik, Chak Gangadhar and others.	Bhupati Lal Banerjee and others.	792 1 3	..	62 8 1
64/1/1	Ditto ..	..	..	5as. 6gds. 2c. 2kt. share in each of mauzas in No. 17 Durgapur, 18 Shalpukuria and others. 1 a. 13gds. 1 c. 1 kt. in each of the mauzas Chak Andharmanik, Chak Gangadhar and others.	Golam Rahman Molla and others	792 1 11	..	102 15 2
145	Mahal Madrasa Bonhooghly, pargana Calcutta.	5,193 14 0	Whole ..	....	Sm. Nanibala Dasi and others.	..	84 15 8½	..
146 R.S.	Mahal Jojra, pargana Anwarpur.	..	..	16 annas share in 185 mauzas.	Dharani Mohan Kal.	26,207 0 2	..	7,283 4 11
147R.S.	Mahal Benota, pargana Calcutta.	..	..	8 annas share in 53 mauzas.	Bhupati Ral Chowdhury.	914 5 11	..	194 4 ½
165	Mahal Rajarampur, pargana Hatiagarh.	599 10 4	Whole ..	....	Hrishikesh Banerjee.	..	97 2 11½	..

Tauzi No.	Name of mahal and pargana.	Sadar jama of the whole estate.	Whether the whole estate is to be sold.	If only a share is to be sold, specification of such share or shares.	Names of proprietors of properties to be sold.	If only a share is to be sold, the Sadar jama of such share.	If the whole estate is to be sold, the arrears due from it.	If only a share is to be sold, the arrears due from it.
1	2	3	4	5	6	7	8	9
		Rs. a. p.				Rs. a. p.	Rs. a. p.	Rs. a. p.
172R.S.	Mahal Gauripur, pargana Calcutta.	..	..	2 as. 8 gds. share in all mauzas except Babanpur and Kataria.	Bhola Nath Banerjee and others.	1,833 14 1	..	505 14 5½
172/4	Ditto ..	..	..	2 as. 2 gds. 2 k. 2 kt. share in all mauzas except Babanpur and Kataria.	Jiban Krishna Rai Chaudhury, trustee.	1,282 12 11	..	2,239 9 10
173R.S.	Mahal Uriapara, pargana Calcutta.	..	..	2 as. 8 gds. ..	Bhola Nath Banerjee and others.	2,197 5 9	..	1,390 5 4
*250/10	Mahal Barulpore, parganas Medanmolla and Khaspur.	..	..	17gds. 2kt. 2dt. ..	Sm. Bijoli Bala Dasi and others.	2,808 7 9	..	2,110 13 1
263	Mahal Ghoshpur, pargana Medanmolla.	2,000 2 11	Whole..	....	Mahim Ch. Chatterjee and others.	..	195 5 10	..
271	Mahal Sitakundu, pargana Medanmolla.	3,083 0 0	Do. ..	....	Mahendra Nath Banerjee.	..	257 2 6½	..
311	Mahal Ektara, pargana Muragacha.	2,670 0 9	Do. ..	....	Manujendra Krishna Mittra and another.	..	318 10 1	..
312	Mahal Belsingha, pargana Muragacha.	8,701 8 10	Do. ..	....	Abani Nath Mukherjee.	..	680 0 8½	..
*326 R. S.	Mahal Bishnupur, pargana Muragacha.	..	..	8 annas ..	Rai Harendra Nath Chaudhuri and another.	1,199 3 8½	..	649 2 ½
341	Mahal Raipur, pargana Ghar.	6,677 14 0	Whole..	....	Atindra Nath Das and others.	..	1,138 8 5	..
351	Mahal Porni, pargana Balia.	8,626 8 6	Do. ..	....	Sourindra Nath Roy.	..	504 3 7	..
352 R.S.	Mahal Naya Hazari, pargana Balia.	..	..	3as. 11gds. 1kt. 1dt. ..	Sailendra Nath Das and another.	1,189 6 0	..	82 14 6
352/1	Ditto ..	..	..	5as. 6gds. 2k. 2kt. ..	Sm. Binapani Dassi.	1,784 1 1	..	124 5 7
352/3	Ditto ..	..	..	1a. 15gds. 2k. 2dt. ..	Sailendra Nath Das and another.	594 11 0	..	41 7 2
353 R.S.	Mahal Nandanpur, pargana Balia.	..	..	8 annas ..	Jugal Charan Mandal and others.	1,599 9 1	..	87 8 3
355	Mahal Raipur, pargana Balia.	2,745 6 0	Whole..	....	Bhola Nath Mondal	..	692 0 2½	..
373	Mahal Mathurapur, pargana Hatiagarh.	16,875 2 7	Do. ..	....	Dharani Mohan Ray.	..	6,490 15 3	..
392 R.S.	Mahal Huda Joychandipur, pargana Azimabad.	..	..	1a. 6gds. 2k. 2kt. ..	Panchanan Mandal	692 10 1	..	49 10 6½
392/4	Ditto ..	..	..	1a. 6gds. 2k. 2kt. ..	Sarat Chandra Mondal.	692 10 3	..	49 11 4
394	Mahal Kishorepur, pargana Azimabad.	7,108 12 11	Whole..	....	Bhola Nath Mondal.	..	2,182 5 11	..
395 R.S.	Mahal Mohammadpur, pargana Azimabad.	..	..	3 annas ..	Hemendra Krishna Sinha and others.	2,730 9 11	..	714 3 3
400	Mahal Ramchandrapur, pargana Balia.	747 1 0	Whole..	....	Naba Kishore Mandal, sebait.	..	47 14 3	..
403 R.S.	Mahal Patharberia, pargana Azimabad.	..	..	4as. 12gds. 1k. 2kt. 1dt.	Kumud Krishna Mondal and others.	1,485 12 8½	..	95 6 10½
403/2	Ditto ..	..	..	6as. 13gds. 1k. 1kt. ..	Sm. Anilabala Dasi and others.	2,142 15 11	..	1,747 8 5
603/1	Mahal Balia, pargana Balia.	..	..	3 annas ..	Narendra Chandra Bose.	3,281 0 7	..	593 2 4
603/6	Ditto ..	..	..	2as. 10gds. ..	Sm. Renu Debi ..	2,734 3 6	..	1,831 12 4
603/7	Ditto ..	..	..	2as. 10gds. ..	Narendra Chandra Bose.	2,734 3 10	..	527 12 0
613	Mahal Kathuriya, pargana Balia.	855 13 0	Whole..	....	Sm. Saliabasini Debi and others.	..	73 9 7	..
643	Mahal Paikan, pargana Amirabad.	560 8 0	Do. ..	....	Narendra Chandra Bose.	..	84 6 6	..
1515	Mahal Srinagar, pargana Medanmolla.	2,109 12 0	Do. ..	....	Jadu Nath Banerjee.	..	346 15 2½	..
2049/1	Mahal Katiara, pargana Ukhra.	..	..	8 annas ..	Kali Das Nandy and others.	2,143 8 2½	..	78 0 2

Tauzi No.	Name of mahal and pargana.	Sadar jama of the whole estate.	Whether the whole estate is to be sold.	If only a share is to be sold, specification of such share or shares.	Names of proprietors of properties to be sold.	If only a share is to be sold, the Sadar jama of such share.	If the whole estate is to be sold, the arrears due from it.	If only a share is to be sold, the arrears due from it.
1	2	3	4	5	6	7	8	9
		Rs. a. p.				Rs. a. p.	Rs. a. p.	Rs. a. p.
2068 R. S.	Mahal Goaldob, pargana Ukhra.	..	..	8as. 16gds. 1k. ..	Surendra Nath Mazumdar and others.	1,355 3 2	..	29 10 10
2071	Mahal Hatighata, pargana Ukhra.	620 4 8	Whole ..	....	Sm. Saralabala Debi.	..	33 4 8	..
*596	Mahal Ranaghat, pargana Hatiaghar.	1,503 0 0	Do. ..	....	Sailendra Nath Mitra and others.	..	303 0 0	..
*1370 R. S.	Mahal Lot No. 101, Mahmudpur Abad, pargana Sunderban.	..	..	4 annas ..	Ramchandra Guha Burman and others.	1,379 0 0	..	828 0 0
*1370/1	Ditto ..	..	..	12 annas ..	Ahidhar Ghosh ..	4,137 0 0	..	2,895 0 0
*1382	Mahal Lot No. 72, 1st portion, pargana Sunderban.	5,316 0 0	Whole ..	....	Tarapada Ghosh	..	3,987 0 0	..
*1406	Mahal Lot No. 72, pargana Sunderban.	565 0 0	Do. ..	....	Ditto ..	..	423 11 0	..
1441 R.S.	Mahal Lot Nos. 30, 32 and 33, pargana Sunderban.	..	..	2as. 16gds. 2k. 9 til	Surendra Narain Dutt and others.	2,419 2 10	..	637 2 5½
1441/9	Ditto ..	..	..	1a. 14gds. 3k. 1kt. 17til	Birendra Narain Dutta.	1,493 7 10	..	489 7 4
*1441/10	Ditto ..	..	..	1a. 4gds. 2k. 1kt. ..	Pankaj Kumar Dutt and others.	1,051 13 9	..	409 12 7
*1441/11	Ditto ..	..	..	3 annas ..	Khirode Gopal Mitter.	2,567 4 0	..	561 8 8
*1441/12	Ditto ..	..	..	18gds. 2kt. 17til ..	Jatindra Narain Dutt.	780 4 3	..	255 5 2
*1441/13	Ditto ..	..	..	1a. 14gds. 3k. 1kt. 17til.	Nripendra Narain Dutt.	1,493 6 3	..	489 6 5
1442 R.S.	Mahal Abadkari Lot No. 22, pargana Sunderban.	..	..	3as. 8gds. 2k. 16til ..	Radhika Prosad Dutt and others.	1,406 12 4	..	214 10 6
1457/1	Mahal Lot No. 90, pargana Sunderban.	..	..	5as. 5gds. ..	Amal Kumar Ray Choudhury and others.	1,967 12 3	..	122 9 0
1486	Mahal Lot No. 64, pargana Sunderban.	935 0 0	Whole ..	....	Atul Kumar Ray Choudhury and others.	..	892 12 0	..
*1487 R.S.	Ditto ..	..	..	12as. 10gds. ..	Jitendra Nath Roy Choudhury and others.	796 14 0	..	199 3 6
*2721 R.S.	Mahal north-western part of Lot No. 16, pargana Sunderban.	..	..	8 annas ..	Manindra Nath Chakrabarty and others.	1,838 8 0	..	580 8 0
2721/1	Ditto ..	..	..	8 annas ..	Annada Prosad Mittra.	1,838 8 0	..	995 0 0
*2731	Mahal western part of Lot No. 138, pargana Sunderban.	4,253 0 0	Whole ..	....	Susil Kumar Ray Choudhury.	..	1,750 0 0	..
2832	Mahal third portion of Lot No. 9, pargana Sunderban.	4,244 0 0	Do. ..	....	Jatindra Nath Kundu and others.	..	1,393 0 0	..
2839	Mahal Lot No. 163, 3rd portion, pargana Sunderban.	5,267 0 0	Do. ..	....	Satish Chandra Chakravarty and others.	..	247 2 0	..
2840	Mahal Lot No. 163, 4th portion, pargana Sunderban.	3,884 0 0	Do. ..	....	Ditto ..	..	181 14 0	..
2841	Mahal Lot No. 16, 4th portion, pargana Sunderban.	3,055 0 0	Do. ..	....	Prionath Rai Mondal and others.	..	468 8 0	..
*2843	Mahal Lot No. 16, 3rd portion, pargana Sunderban.	3,438 0 0	Do. ..	....	Sadan Kumar Bose and others.	..	111 11 2	..
2845	Mahal Lot No. 135, 3rd portion, pargana Sunderban.	5,468 0 0	Do. ..	....	Sarat Chandra Bhowmik and another.	..	403 0 0	..

Tauzi No.	Name of mahal and pargana.	Sadar jama of the whole estate.	Whether the whole estate is to be sold.	If only a share is to be sold, specification of such share or shares.	Names of proprietors of properties to be sold.	If only a share is to be sold, the Sadar jama of such share.	If the whole estate is to be sold, the arrears due from it.	If only a share is to be sold, the arrears due from it.
1	2	3	4	5	6	7	8	9
		Rs. a. p.				Rs. a. p.	Rs. a. p.	Rs. a. p.
*2853	Mahal Lot No. 128, 1st portion of the south portion, pargana Sunderban.	3,348 0 0	Whole	....	Rai Dwarika Nath Chakrabarty Bahadur.	..	457 0 0	..
2854	Mahal Lot No. 111, 10th portion, pargana Sunderban.	4,217 0 0	Do. ..	....	Harimohan Rai and another.	..	667 0 0	..
2857	Mahal Lot No. 114, 7th portion, pargana Sunderban.	2,590 0 0	Do. ..	....	Bhola Nath Giri and others.	..	243 12 0	..
*2861	Mahal Lot No. 114, 1st portion, pargana Sunderban.	3,058 0 0	Do. ..	....	Jadu Nath Banerjee and others.	..	404 0 0	..
2864	Mahal Lot No. 114, 2nd portion, pargana Sunderban.	3,497 0 0	Do. ..	....	Mohendra Nath Nanda and others.	..	258 12 0	..
2865	Mahal Lot No. 114, 8th portion, pargana Sunderban.	3,777 0 0	Do. ..	....	Shyama Charan Nanda and others.	..	67 5 3	..
2866	Mahal Lot No. 114, 9th portion, pargana Sunderban.	3,515 0 0	Do. ..	....	Sailaja Charan Nanda and others.	..	74 7 1	..
2868	Mahal Lot No. 114, 4th portion, pargana Sunderban	2,174 0 0	Do. ..	....	Bama Charan Das and others.	..	240 0 0	..
2872	Mahal Lot No. 130, 2nd portion, pargana Sunderban.	1,485 0 0	Do. ..	..	Surendra Nath Mazumdar and others.	..	279 0 0	..
2897	Mahal I plot, 2nd portion, pargana Sunderban.	1,379 0 0	Do. ..	....	Ram Gopal Das Naskar and others.	..	183 5 4	..
2898	Mahal I plot, 1st portion, pargana Sunderban.	979 0 0	Do. ..	....	Ram Gopal Das and others.	..	98 0 0	..
2900	Mahal Lot No. 122, 2nd portion, pargana Sunderban.	783 0 0	Do. ..	....	Chandi Charan Laha.	..	157 0 0	..
2925	Mahal E plot, 1st portion, pargana Sunderban.	1,094 0 0	Do. ..	....	Bhupendra Nath Jana and others.	..	219 0 0	..
2932	Mahal Sagore Island Lot described as Tower land, 2nd portion, pargana Sunderban.	4,050 0 0	Do. ..	....	Sagar Chandra Das.	..	253 0 0	..
2946	Mahal Lot No. 140, 2nd portion, pargana Sunderban.	1,103 0 0	Do. ..	....	Sm. Mrinalini Palit and another, sebait.	..	221 0 0	..
2953	Mahal G plot, 2nd portion, pargana Sunderban.	1,334 0 0	Do. ..	....	Debendra Narayan Hazra and others.	..	267 0 0	..
2954	Mahal C plot, 2nd portion, pargana Sunderban.	1,035 0 0	Do. ..	....	Sudhir Chandra Jana and others.	..	207 0 0	..
2973	Mahal G plot, 4th portion, pargana Sunderban.	898 0 0	Do. ..	....	Sudhir Chandra Sarkar and others.	..	448 0 0	..
2977	Mahal Lot No. 117, 2nd portion, pargana Sunderban.	943 0 0	Do. ..	....	Chandi Charan Laha.	..	188 0 0	..
2987	Mahal Lot No. 150, 1st portion, pargana Sunderban.	939 0 0	Do. ..	....	Shib Chandra Ghosh and others.	..	188 0 0	..
2989	Mahal Lot No. 110, 4th portion, pargana Sunderban.	1,234 0 0	Do. ..	....	Nirmal Chandra Mondal and others.	..	587 0 0	..
2993	Mahal Lot No. 162, 1st portion, pargana Sunderban.	1,285 0 0	Do. ..	....	Sm. Biswesvari Debi.	..	257 0 0	..
3026	Mahal 3rd portion of Chak Mansadwip, pargana Sunderban.	2,046 8 0	Do. ..	....	Bon Behari Jana and another.	..	409 3 0	..
*3195	Mahal Chota Sahebkhali, pargana Sunderban.	1,112 0 0	Do. ..	....	Tarapada Ghosh	..	834 0 0	..

The estates excepting those marked with asterisk are being advertised for sale for instalments of revenue which were due on or before the 31st of Jaista, 1343 B.S., and of which the latest day of payment was the 28th June 1936.

The estates marked with asterisk are being advertised for sale for instalments of revenue which were due on or before the 29th of Falgoon, 1342 B. S., and of which the latest day of pament was the 28th March 1936.

Alipore, the 26th August 1936.

[ILLEGIBLE], *For* Collector.

Notification A.

NOTICE is hereby given, under sections 6 and 13, Act XI of 1859, that the undermentioned estates and shares of estates in the district of Dinajpur will be put up for sale at the office of the Collector of that district on the 25th September 1936, at 12 noon, for arrears of revenue and other demands which by law are realizable as arrears of land revenue.

When in columns 5, 7 and 9 of the following statement it is stated that only a share is to be sold, it is to be understood that a separate account is kept for that share :—

Tauzi No.	Name of mahal and pargana.	Sadar Jama of whole estate.	Whether the whole estate is to be sold.	If only a share is to be sold, specification of such share or shares.	Names of proprietors of property to be sold.	If only a share is to be sold, the sadar jama of such share.	If the whole estate is to be sold, the arrears due from it.	If only a share is to be sold, the arrears due from it.
1	2	3	4	5	6	7	8	9
		Rs. a. p.				Rs. a. p.	Rs. a. p.	Rs. a. p.
32	Mahal Jaypur, pargana Dgora.	1,475 9 11	No ..	12 annas, S.A. No. 1 All other shares besides that noted will be excluded from the sale.	Priyanath Maitra	1,106 11 6	..	79 11 6
49	Mahal Saidpur, pargana Gilahabar.	2,176 10 1	Yes ..	....	Bibi Isamon Nessa Chowdhurani.	..	226 10 1	..
59	Mahal Uriapara, pargana Rajnagar.	4,625 4 11	Yes ..	....	Azizar Rahman, guardian on behalf of minor Motwali Rahamtulla Chowdhury.	..	336 4 11	..
82	Mahal Madhupur, pargana Mahasa.	1,131 9 9	Yes ..	....	Satyendra Nath Majumdar, Jagadindra Nath Majumdar and others.	..	118 9 1	..
115	Mahal Sahabajpur, pargana Santosh.	6,033 12 6	No ..	8annas residuary share All other shares besides that noted will be excluded from the sale.	Debesh Chandra Mukherjee.	3,016 14 3	..	309 12 8
127	Mahal Pukhuri, pargana Gilahabari.	1,696 12 8	Yes ..	....	Late proprietor Rajkumari Tripureswari, Sailendra Nath Roy and others, present proprietor by auction purchase Jamiruddin Chowdhury.	..	254 12 8	..
133	Mahal Palashi, pargana Gilahabari.	1,696 12 7	Shares noted in column 5 will be put up to sale together.	8 annas residuary share.	Mukunda Chandra Dutta Chowdhury and others.	848 6 3	..	127 6 3
				6annas, S.A. No. 1 ..	Mafizuddin Chowdhury.	636 4 9	..	96 4 9
				2annas, S.A. No. 2 ..	Munshi Amir Hossain Talukdar and others.	212 1 7	..	32 1 7
136	Mahal Charkal, pargana Sarhatta.	1,702 0 10	Yes ..	....	Maharaj Bahadur Singh.	..	173 0 9	..
143	Mahal Panchanan, pargana Debikote.	1,947 10 0	Yes ..	....	Panchanan Nandi Chowdhury.	..	199 10 0	..
145	Mahal Binaykuri, pargana Dgora.	4,761 0 10	Shares noted in column 5 will be put up to sale together.	12 annas, residuary share.	Sidheswar Dey Chowdhury and others.	3,570 12 8	..	331 8 8
				4 annas, S.A. No. 1 ..	Sidheswar Dey, Chowdhury and another.	1,190 4 2	..	110 8 1
161	Mahal Ramdebpur, pargana Fulbari.	3,187 10 0	Yes ..	....	Jyotish Chandra Guha and others.	..	432 1 0	..
162	Mahal Gokul, pargana Gilahabari.	2,893 2 6	No ..	0as. 6g. 2c. 2kt., residuary share. All other shares besides that noted will be excluded from the sale.	Biman Chandra Dutta Munshi and another.	1,145 3 3	..	99 11 5
169	Mahal Gachhatta, pargana Bajitpur.	7,155 8 0	No ..	2 as. 13 g. 1 c. 1 kt., S.A. No. 2.	Gopendra Narayan Roy.	1,192 9 4	..	124 1 4
				5 as. 0 g. 2 c. 2 kt., S.A. No. 3.	Surendra Narayan Chowdhury.	2,385 2 8	..	248 2 8
				1 a. 0 g. 2 c. 2 kt., S.A. No. 6. All other shares besides that noted will be excluded from the sale.	Gopendra Narayan Roy.	596 4 8	..	62 1 2

Tauzi No.	Name of mahal and pargana.	Sadar jama of whole estate.	Whether the whole estate is to be sold.	If only a share is to be sold, specification of such share or shares.	Names of proprietors of property to be sold.	If only a share is to be sold, the sadar jama of such share.	If the whole estate is to be sold, the arrears due from it.	If only a share is to be sold, the arrears due from it.
1	2	3	4	5	6	7	8	9
		Rs. a. p.				Rs. a. p.	Rs. a. p.	Rs. a. p.
170	Mahal Mahattore, pargana Lalitpur.	1,879 12 0	No ..	6 as. 6 g. 2 c. residuary share. All other shares besides that noted will be excluded from the sale.	Surendra Narayan Chowdhury.	743 1 5	..	76 1 4
172	Mahal Bhandardaha, pargana Dehatta.	2,392 5 5	Yes ..	....	Kshirode Kanta Sen, pleader, receiver on behalf of Motwali Md. Yusuf Chowdhury.	..	270 4 10	..
173	Mahal Mahammad Yusuf, pargana Dehatta.	902 1 0	Yes ..	....	Late proprietor Kshirode Kanta Sen, pleader, receiver on behalf of Motwali Md. Yusuf Chowdhury, present proprietor Mahatabuddin Chowdhury.	..	63 4 0	..
181	Mahal Gaisahar, pargana Deora.	1,612 13 0	Shares noted in column 5 will be put up to sale together.	6 as. 8 p., residuary share. 5 as. 4 p., S. A. No. 2. 4 annas, S. A. No. 3.	Umesh Chandra Das Deb Barma. Chandra Sekhar Das Deb Barma and others. Umesh Chandra Das Deb Barma.	672 0 1 537 9 8 403 3 3	.. .. ..	50 13 0 40 [illegible] 30 [illegible]
197	Mahal Malancha, pargana Gilahabari.	3,349 7 3	Yes ..	....	Mohini Mohan Banerjee and others.	..	451 7 3	..
206	Mahal Kulhari, pargana Sashbir.	4,590 9 8	No .	4 as. 5 g. 1 c. 1 kt., S. A. No. 2. All other shares besides that noted will be excluded from the sale.	Bishnupada Chowdhury and another.	1,224 2 7	..	125 12 2
209	Mahal Kara, pargana Gilahabari.	3,244 1 5	No ..	10 as. 13 g. 1 c. 1 kt., residuary share. All other shares besides that noted will be excluded from the sale.	Mahammad Ekramuddin Chowdhury and others.	2,162 11 7	..	241 11 5
216	Mahal Gobindapur, pargana Panjra.	4,083 12 3	No. ..	8 annas S. A. No. 1. All other shares besides that noted will be excluded from the sale.	Kshirode Behary Saha and others.	2,041 14 2	..	145 14 1
237	Mahal Daulatpur, pargana Rajnagar.	4,660 8 1	Yes ..	....	Azizar Rahman, guardian on behalf of minor Motwali Rahmtulla Chowdhury.	..	344 8 1	..
238	Mahal Sultanpur, pargana Sultanpur.	1,718 4 10	No ..	14 as. 19 g. 3 c. 1 kt. 10 til residuary share. All other shares besides that noted will be excluded from the sale.	Rajkumari Tripureswari and others.	1,610 8 10	..	139 9 8
252	Mahal Ujirpur, pargana Gilahabari.	854 0 0	Yes ..	....	Naba Kumar Sinha Dudhuria and another.	..	87 0 0	..
256	Mahal Sindurhata, pargana Gilahabari.	4,281 5 3	Yes ..	....	Kumar Sarat Kumar Roy.	..	434 5 3	..
266	Mahal Hazipur, pargana Lalbarikhalisa.	1,559 13 5	No ..	12 as. 7 g. 2 c., residuary share. All other shares besides that noted will be excluded from the sale.	Shah Md. Khalilluddin Haider Abu Jabbar and others.	1,206 7 0	..	70 0 0

Tauzi No.	Name of mahal and pargana.	Sadar jama of whole estate.	Whether the whole estate is to be sold.	If only a share is to be sold, specification of such share or shares.	Names of proprietors of property to be sold.	If only a share is to be sold, the sadar jama of such share.	If the whole estate is to be sold, the arrears due from it.	If only a share is to be sold, the arrears due from it.
1	2	3	4	5	6	7	8	9
		Rs. a. p.				Rs. a. p.	Rs. a. p.	Rs. a. p.
271	Mahal Raysali, pargana Kharali.	4,649 11 8	No ..	6 annas, S. A. No. 1	Chandra Nath Chatterjee and another.	1,713 10 5	..	182 10 5
				2 as. 10 g., S. A. No. 3	Jagadish Nath Bhattacharyya.	726 8 4	..	76 5 10
				All other shares besides that noted will be excluded from the sale.				
279	Mahal Debnathpur, pargana Deora.	3,275 10 0	No ..	7 as. 13 g. 2 c., residuary share.	Prafulla Mayee Debi and others.	1,570 7 1	..	130 7 1
				1 a. 3 g. 2 kt. 3 job, S. A. No. 2.	Pratap Chandra Khasnabis.	237 6 9	..	20 6 9
				1a. 16g. 3 c. 1 job, S.A. No. 6.	Chuna Muhammad Shah and others.	876 4 9	..	31 4 9
				All other shares besides that noted will be excluded from the sale.				
316	Mahal Rajibpur, pargana Panjra.	884 11 8	Yes ..	....	Nilabja Prova Debi and Kiron Bala Sinha as guardian on behalf of Amrita Gopal Sinha and Raghu Nandan Sinha.	..	54 11 8	
345	Mahal Raghabendrapur, pargana Falbari.	3,079 15 0	No ..	12 annas residuary share.	Manindra Chandra Bakshi and others.	2,310 0 7	..	239 3 9
				2 annas, S. A. No. 7	Debiranjan Pathak and others.	384 15 11	..	39 15 11
				15 gandas, S. A. No. 8	Surath Lal Chowdhury.	144 5 5	..	14 15 4
				15 gandas, S. A. No. 9	Biraj Mohini Chowdhurani.	144 5 7	..	14 9 6
				All other shares besides that noted will be excluded from the sale.				
372	Mahal Janakinath, pargana Nurpur.	500 2 9	Yes .	....	Satyendra Nath Majumdar and another.	..	32 2 9	
377	Mahal Punatti, pargana Nurpur.	906 15 9	Shares noted in column 5 will be put up to sale together.	8 annas residuary share.	Asutosh Guha and others.	454 7 10	..	47 7 10
				8 annas, S. A. No. 1	Harish Chandra Das Deb Barman, adult.	454 7 11	..	47 7 11
389	Mahal Subarnakhali, pargana Panjra.	2,614 6 6	Shares noted in column 5 will be put up to sale together.	1 annas (Group), S. A. No. 1.	Chhakurani Dasya	205 11 4	..	17 11 4
				8 annas (Group), S. A. No. 2.	Harish Chandra Das Deb Barma.	411 6 10	..	35 6 10
				4 annas (Group), S. A. No. 4	Chinmoyee Chowdhurani and another.	205 11 5	..	17 11 5
				16 annas share of Hosainpur group of mauzas and 8 as. 16 g. 1 247/329 dt. share in 16 annas share of Bishnugani Khamar group of mauzas of this estate will be excluded from the sale.				

Tauzi No.	Name of mahal and pargana.	Sadar jama of whole estate.	Whether the whole estate is to be sold.	If only a share is to be sold, specification of such share or shares.	Names of proprietors of property to be sold.	If only a share is to be sold, the sadar jama of such share.	If the whole estate is to be sold, the arrears due from it.	If only a share is to be sold, the arrears due from it.
1	2	3	4	5	6	7	8	9
		Rs. a. p.				Rs. a. p.	Rs. a. p.	Rs. a. p.
404	Mahal Haragobindapur, pargana Gilahabari.	3,349 7 4	No ..	6as. 10g 1kt. 2½dt. residuary share.	Khejmatuddin Chowdhury and others.	1,362 3 11	..	86 5 4
				1a. 12g. 1cr. 4½dt., S. A. No. 6.	Moslemuddin Chowdhury.	338 13 11	..	45 14 1
				All other shares besides that noted will be excluded from the sale.				
421	Mahal Saritabad, pargana Kardaha.	966 13 5	Yes ..	....	Satyendra Nath Majumdar and another.	..	94 13 3	..
426	Mahal Gopinathpur, pargana Gilahabari.	1,433 14 7	Yes ..	....	Kumar Sarat Kumar Roy.	..	326 11 11	..
469	Mahal Shyampur, pargana Gilahabari.	1,745 3 6	No ..	5 as. 6g. 2cr. 2kt., S. A. No. 2.	Dalmuddin Chowdhury and others.	581 11 10	..	60 11 8
				All other shares besides that noted will be excluded from the sale.				
470	Mahal Ramkristapur, pargana Gilahabari.	1,557 12 3	Yes ..	....	Kumar Sarat Kumar Roy.	..	574 9 6	..
474	Mahal Kukhil, pargana Rajnagar.	1,547 15 4	No ..	7 as. 6g. 2cr. 2kt. residuary share.	Maharaja Jagadish Nath Roy and others.	709 7 7	..	68 7 7
				All other shares besides that noted will be excluded from the sale.				
484	Mahal Jalali, pargana Salbari.	806 9 3	Shares noted in column 5 will be put up to sale together.	16 annas (Group) residuary share.	Kishorilal Jhan Chakravarty and others.	275 8 5	..	30 6 3
				16 annas (Group), S. A. No. 1.	Brojendralal Jhan Chakravarty and others.	531 0 10	..	53 11 6
497	Mahal Amjamkore, pargana Dehatta.	1,025 7 0	Yes ..	....	Satyendra Nath Majumdar and another.	..	110 6 0	..
500	Mahal Sultanpur, pargana Lalbarikhalisa.	991 2 5	No ..	12 as. 7 g. 2 cr. residuary share.	Bibi Ummataj Jahara and others.	766 9 5	..	39 2 6
				All other shares besides that noted will be excluded from the sale.				
785	Mahal Khadimpur, pargana Mahashaw.	1,261 10 10	..	4 as. 19 g. 3 cr. 4/13 kt. residuary share.	Alefuddin Hossain Chowdhury and others.	210 4 9	..	25 0 4
				2 annas, S. A. No. 2 ..	Jagadish Chandra Rai and others.	157 11 4	..	18 13 2
				3 as. 6 g. 2 cr. 2 kt., S. A. No. 3.	Sarifuddin Hossain Chowdhury and others.	262 18 7	..	31 7 6
				1 a. 10 g., S. A. No. 4	Ditto ..	118 4 3	..	14 2 1
				1 a. 10 g. 2 9/13 kt. ..	Alifuddin Hossain and others.	302 4 5	..	36 1 7
				All other shares besides that noted will be excluded from the sale.				

Tauzi No.	Name of mahal and pargana.	Sadar jama of whole estate.	Whether the whole estate is to be sold.	If only a share is to be sold, specification of such share or shares.	Names of proprietors of property to be sold.	If only a share is to be sold, the sadar jama of such share.	If the whole estate is to be sold the arrears due from it.	If only a share is to be sold, the arrears due from it.
1	2	3	4	5	6	7	8	9
		Rs. a. p.				Rs. a. p.	Rs. a. p.	Rs. a. p.
797	Mahal Ganeshbati, pargana Bhuiharn.	607 6 5	Yes ..	....	Dharanidhar Ghose Chowdhury and others.	..	45 10 7	..
809	Mahal Akhira, pargana Santosh.	604 11 3	Yes ..	....	Nilobja Prova Debi and Kiran Baja Sinha, guardians on behalf of (*a*) Amrita Gopal Sinha and (*b*) Raghu Nandan Sinha.	..	62 10 4	..
810	Mahal Gulrajpur, pargana Santosh.	604 11 3	Yes ..	....	Satyendra Nath Majumdar and another.	..	62 10 10	..
856	Mahal Bistupur, pargana Fulbari.	3,076 9 0	No ..	10 annas residuary share. All other shares besides that noted will be excluded from the sale.	Umesh Chandra Khashnavis, shebait.	1,922 13 6	..	157 6 7
877	Mahal Gopalpara, pargana Fulbari.	3,184 13 0	No ..	6 as. 6 g. 2 cr. 2 kt. residuary share.	Biman Chandra Dutta Munshi.	1,260 12 2	..	111 2 7
893	Mahal Hazratpur, pargana Kardaha.	2,356 10 8	Shares noted in column 5 will be put up to sale together.	8 annas residuary share. 8 annas, S. A. No. 1 .. All other shares besides that noted will be excluded from the sale.	Manmatha Kumar Roy and others. Mati Mohan Dutta Gupta and others.	1,178 5 4 1,178 5 4	.. ..	123 13 4 123 8 4
910	Mahal Madhabpara, pargana Rajnagar.	1,817 0 11	Yes ..	....	Aftabuddin Chowdhury and others.	..	121 7 10	..
923	Mahal Kawarpur, pargana Nurpur.	1,323 11 10	No ..	10 as. 13 g. 1 cr. 1 kt. residuary share. All other shares besides that noted will be excluded from the sale.	Kamala Charan Sen and others.	882 7 11	..	103 15 9
962	Mahal Toke Krishnapur, pargana Kharail.	503 8 8	Yes ..	....	Satyendra Nath Majumdar and another.	..	62 8 0	..
984	Mahal Nagendra Behary, pargana Baragaon.	646 7 1	Yes .	....	Nagendra Behary Roy Chowdhury.	..	72 7 1	..
1073	Mahal Girija Ballav, pargana Jhapartali	1,331 6 0	Yes ..	....	Girija Ballav Roy Chowdhury	..	119 6 0	..
1141	Mahal Ramkali Barid Baran, pargana Debikot.	1,947 10 0	Yes ..	....	Panchanan Nandi Chowdhury guardian on behalf of (*a*) Ram Kali Nandi Chowdhury and (*b*) Barid Baran Nandi Chowdhury.	..	190 10 0	..
1142	Mahal Kumar Krishna, pargana Debikot.	1,731 3 0	Yes .	....	Kumar Krishna Nandi Chowdhury.	..	178 3 0	..

This notice is issued in respect of instalments of revenue due on or before the 31st Jaistha, 1343 B.S., of which the latest date of payment was 29th June 1936.

[ILLEGIBLE], *for* Collector.

Dinajpur, the 27th August 1936.

Notification A.

NOTICE is hereby given, under sections 6 and 13, Act XI of 1859, that the undermentioned estates and shares of estates in the district of Dinajpur will be put up for sale at the office of the Collector of that district on the 25th September 1936, at 12 noon, for arrears of revenue and other demands which by law are realizable as arrears of land revenue.

When in columns 5, 7 and 9 of the following statement it is stated that only a share is to be sold, it is to be understood that a separate account is kept for that share :—

Tauzi No.	Name of mahal and pargana.	Sadar jama of whole estate.	Whether the whole estate is to be sold.	If only a share is to be sold, specification of such share or shares.	Names of proprietors of property to be sold.	If only a share is to be sold, the Sadar jama of such share.	If the whole estate is to be sold, the arrears due from it.	If only a share is to be sold, the arrears due from it.
1	2	3	4	5	6	7	8	9
		Rs. a. p.				Rs. a. p.	Rs. a. p.	Rs. a. p.
65	Mahal Khalora, pargana Khalora.	18,001 12 5	Shares noted in column 5 will be put up to sale together	6 as. 10 g. residuary share.	Girija Ballav Roy Chowdhury.	7,313 3 6	..	878 3 6
				9 as. 10 g., S. A. No. 2	Nagendra Behary Roy Chowdhury.	10,688 8 11	..	1,285 8 11
66	Mahal Hekendari, pargana Sashbir.	7,543 1 4	No ..	8 annas residuary share.	Maharaj Bahadur Singh.	5,057 5 0	..	341 8 8
				All other shares besides that noted will be excluded from the sale.				
67	Mahal Nagendra Behary Roy Chowdhury, pargana Dhapartali.	5,054 4 0	Yes ..	....	Nagendra Behary Roy Chowdhury.	..	468 2 9	..
68	Mahal Ghanashyampur, pargana Saibari.	6,374 11 8	Shares noted in column 5 will be put up to sale together.	6 as. 10g. residuary share.	Girija Ballav Roy Chowdhury.	2,589 11 8	..	223 11 8
				9 as. 10 g. S. A. No. 2	Nagendra Behary Roy Chaudhury.	3,785 0 0	..	327 0 0
69	Mahal Narayanpur, pargana Saibari.	5,578 6 6	Do. ..	6 as. 10 g. residuary share.	Girija Ballav Roy Chowdhury.	2,266 2 6	..	191 8 3
				9 as. 10 g. S. A. No. 2	Nagendra Behary Roy Chowdhury.	3,312 4 0	..	281 9 10
70	Mahal Bisrampur, pargana Baragaon.	6,957 14 0	Do. ..	6 as. 10 g. residuary share.	Girija Ballav Roy Chowdhury.	2,826 10 2	..	255 10 2
				9 as. 10 g. S. A. No. 2	Nagendra Behari Roy Chowdhury.	4,131 3 10	..	373 3 10
105	Mahal Ghoraband, pargana Deora.	5,737 4 6	Yes ..	....	Ramjadu Banerjee.	..	669 4 6	..
184	Mahal Rajnagar, pargana Rajnagar.	5,191 10 11	Yes ..	....	Maharaj Bahadur Singh.	..	394 10 11	..
204	Mahal Mirzapur, pargana Gilahabari.	6,893 14 4	Yes ..	....	Kumar Sarat Kumar Roy.	..	708 10 0	..
456	Mahal Gangaprosad, pargana Shashbir.	5,931 15 7	Yes ..	....	Niroda Sundari Chowdhurani and another.	..	619 14 10	..
462	Mahal Safanagar, pargana Kardaha.	7,637 8 6	Yes ..	....	Syed Badrud Doya and others.	..	786 8 6	..
463	Mahal Amrah, pargana Gilahabari.	5,016 2 5	Yes ..	....	Broja Bhusan Roy Chowdhury and others.	..	525 2 5	..

This notice is issued in respect of instalments of revenue due on or before the 31st Jaistha, 1343 B.S., of which the latest date of payment was 29th June 1936.

[ILLEGIBLE], *for* Collector.

Dinajpur, the 27th August 1936.

Notification A.

NOTICE is hereby given under sections 6 and 13 of Act XI of 1859 that the undermentioned estates and shares of estates in the district of Hooghly will be put up for sale at the office of the Collector of that district on the 25th September 1936 at 12 noon for arrears of revenue and other demands which by law are realizable as arrears of land revenue.

When in columns 5, 7 and 9 of the following statement it is stated that only a share is to be sold, it is to be understood that a separate account is kept for that share :—

Tauzi No.	Name of mahal and pargana.	Sadar jama of the whole estate.	Whether the whole estate is to be sold.	If only a share is to be sold, specification of such share or shares.	Names of proprietors of property to be sold.	If only a share is to be sold, the sadar jama of such share.	If the whole estate is to be sold, the arrears due from it.	If only a share is to be sold, the arrears due from it.
1	2	3	4	5	6	7	8	9
		Rs. a. p.				Rs. a. p.	Rs. a. p.	Rs. a. p.
26-Res.	Malikapur, pargana Balligori.	10,552 14 0	..	2 as. 8 g. 3 k. of mauza Harpur. 16 annas share of mauzas Senpur, Malikapur, Balarampur and Mohanbati. 8 annas share of mauzas Jotebanshi, Samsarpur, Parbatipur. 7 annas share of mauzas Neyamatpur, Tulban, Pirigpur, Bhoramollapur, Jote Krishnadas and Kalikapur.	Samarendra N. Sinha Ray and others.	4,498 8 9	..	5,135 3 7
37/7	Hridayrampur, pargana Chowmalia.	44,805 14 9	..	12 as. 16 g. share of mauzas in serial Nos. 9, 10, 11 (9) Baikuntapur, Hridayrampur, Alaipur, Palsa, Katundi and Katundibahir. (10) Jagannathpur, Kashijote, Narayanpur, Dulfa, Panchra, Paramanandpur, Maheshpurpati, Gopalpur, Maheswarpur *alias* Doyarapur, Bhowanipur, Banadarum, Bangalpur, Mohabirchak Sagrai and Bangalpurpati Ballavpur (11) Ballavipur, Jibonjole, Natuyapur, Baneswarpur, Ramkrishnapur, Belvachiya, Kalagata Amulya, Khanpur, Gangarampur, Kanaipur Kismat, Chartanmabati Kismat, Sangramjole, Dhanlakti, Purandarpur Kismat, Chowhatta, Parameswarpur, Rupraj pur, Malikandi, Kadtpara, Ganespur, Chumanchak, Basudevpat, Kristopur, Mahkapur, Dadhi Brahmanpur and Raghunathpur.	Monohar Mukherji.	10,566 8 2	..	9,782 2 10
37/8	Ditto .	44,805 14 9	..	12 as. 16 g. share in mauzas in serial Nos. 1, 2, 5 – (1) Nachaidanga, Lakshmanpur, Prosadpur and Digribaley Khagragachi. (2) Panschala, Bhagabatipur, Madhabjote, Jezur, Kaskapara, Nandanpur, Raklapara, Ankapata, Nalti, Jhupur, Samsanda, Barasanda Samil Patalar, Hetampur, Pallagachi, Kanaipukuria and Istrya. (5) Raghunathpur, Radhaballavpur, Srirampur, Khoradda *alias* Saighora and Sadasivabati.	Mahendra Nath Mookerji	10,936 7 0	.	9,093 14 0

Tauzi No.	Name of mahal and pargana.	Sadar jama of the whole estate.	Whether the whole estate is to be sold.	If only a share is to be sold, specification of such share or shares.	Names of proprietors of property to be sold.	If only a share is to be sold, the sadar jama of such share.	If the whole estate is to be sold, the arrears due from it.	If only a share is to be sold, the arrears due from it.
1	2	3	4	5	6	7	8	9
		Rs. a. p.				Rs. a. p.	Rs. a. p.	Rs. a. p.
37/9	Hridayrampur, pargana Chowmaha.	44,805 14 9	..	12 as. 10 g. share of mauzas in serial Nos. 3, 4— (3) Dhanyagacha, Paikpara, Bhagirathpur, Monoharpur, Sangramchawk, Amatpur, Amdhara *alias* Ghosa. (4) Annatapur *alias* Tenpur, Anandapurbirija *alias* Paighata, Barija *alias* Paighata, Bonwari Bankajalkar, Barijajangalbar, Barijabaxitola *alias* Jhakra Sarsa, Barija Jalkar *alias* Kadamtola, Bhatpara, Bhairabpur, Chinneychak, Shawta, Chingrigaria, Changgoria, Doulatchak *alias* Sudamchak, Govindapur, Gopalpur, Harinarainpur, Hijli, Joyantipur, Jagannathpur, Jalkar *alias* Kharijamoura, Kadamtola, Kanaichak, Keagoriah, Keagoriabandh, Khajemchak *alias* Rangamatta, Khejurdanga, Murakata, Mathurapur, Mirkuli *alias* Bali Tentulia, Palasi, Palangapur, Palkmajiya, Pratappur, Ramdeopur, Salnah *alias* Basanbar Sukhsitala, Tenpur, Tenpur Kismat, Tentulia and Dayamauza.	Bhupendra Nath Mukherji	10,667 4 0	..	6,365 8 0
37/10	Ditto ..	44,805 14 9	..	12 as. 15 g. share of mauzas in serial No. 7 — (7) Ghatra, Kankrajole, Kamdevpur, Basubati and Narayanpur.	Trustee Mahendra N. Mukherji.	4,100 0 0	..	946 8 0
40/8	Beli, pargana Baligori.	10,107 2 0	..	7 annas ..	Kedar Nath Mukherji and others.	4,421 14 0	..	525 4 0
44-Res.	Pandra, pargana Balia.	11,150 12 0	..	4 annas ..	Purna Ch. Chaudhuri.	2,787 4 1	..	430 0 7
47-Res	Sanchitara, pargana Panduah.	47,385 11 11	..	8 annas share of mauzas Jatrasudhi, Jatrasudhi *alias* Nutanchar, Balikismat and Balichar Kharija Osmanpur, Dumurdaha, Charmadhusudanpur and 16 annas share of the following mauzas Saleswarpur, Haripur, Benodepur, Ekloki, Kis Ekloki, Jamirbarijhati, Patool, Kariji Khanpur, Doulatpur, Ramchandra Chakran Kundhara, Mathurpur, Kirtinagar, Payan, Akutipota, Jotekusai, Rampur, Manpara Acharjapara, Mahanad Dakhinpara, Kagchipara, Bahimpurpara, Radha Krishna Neogy's Khariji Proja, Salukgari, Kotalpara, Ghosepur, Ramanathpur, Ramnathpur, Soonia, Duttapati Sirajabad *alias* Mayapur, Duttabati, Sankarpati, Balahati, Balabati Hatchandi, Bhaskur Chawk Gokulpur, Hatchandri, Krishnajote, Chaltpur, Panchdeuli, Depaldighi, Balaldighi Ramkantapur, Nealy, Fatepur, Krishnachandra, Lakshmikantapur, Madanbati, Panchlai	Rajendra N. Roy as receiver to the estate of Abaninath Mookerjee.	23,764 14 7	..	29,336 5 10

Tauzi No.	Name of mahal and pargana.	Sadar jama of the whole estate.	Whether the whole estate is to be sold.	If only a share is to be sold, specification of such share or shares.	Names of proprietors of property to be sold.	If only a share is to be sold, the sadar jama of such share.	If the whole estate is to be sold, the arrears due from it.	If only a share is to be sold, the arrears due from it.
1	2	3	4	5	6	7	8	9
		Rs. a. p.				Rs. a. p.	Rs. a. p.	Rs. a. p.
				Reshuia, Rampur *alias* Sahasbrarampur, Daljhati *alias* Srimukhbati, Paranchapati Paikpara, Lalitagori, Ramchandrapur, Brindaban Chawk, Chongdarbundh, Naricha, Kusaljote.				
54-Res.	Thalpara pargana Panduah.	1,066 1 0	..	8 as. 3 kag 11 til 9 til kag 10 til ganda share of mauzas Sriramhati, Kanur, Nakurthan Charaihati Gossainpur *alias* Monoharpur, Matukpur, Golagori, Idrakpur, Bhojanpur, Brahampur, Souragori, Ilampur, Purusothampur Kalirhati, Magura, Balarampur and Nijthalpara.	Sourindra Nath Mitra and Anathnath Roy as joint receivers to the estate of Sourendra N. Mitra and others.	522 12 0	..	39 0 0
				7 as. 8 g. 2 k. 3 kag. 16 til share of mauzas Panchgora, Dalhat Achgori, Srifala, Bagmaidan, Saibona and Kallaunda.				
67-D,	Gurbari, pargana Chowmaha.	2,695 15 0	..	8 annas share of mauzas Kashipur and Katgora	Sm. Bidhumukhi Dasi.	590 6 0	..	75 3 0
72-A	Gopalnagar, pargana Jahanabad.	2,917 11 2	..	3as 10g. ..	Dharani Mohan Ray	638 3 9	..	83 1 9
77-1	Bandipur, pargana Bandipur.	14,781 4 0	..	2as. 13g 1k. 1kt. ..	Minor Amarjit Lal Choudhuri and three others, guardian mother Padmabala Devi.	2,463 10 4	..	3,040 13 8
77-3	Ditto ..	14,781 4 0	..	2as. 13g. 1k 1kt. ..	Birendra Lal Chaudhury.	2,463 10 4	..	2,581 0 8
77-6	Ditto ..	14,781 4 0	..	17gds. 3k. 1 dt. ..	Ditto ..	821 4 0	..	869 6 7
82-1	Rampara, pargana Balia.	10,514 0 0	..	11as. 8g 2k.	Kumudprakas Ganguly and others as trustees to the estate of late Maharaja Sir Jatindra Mohan Tagore, K.C.S.I.	7,517 15 8	..	983 2 0
85-6	Kunjaban, pargana Baligori.	10,417 7 0	..	4 gandas ..	Sudhansu Sekhar Nandy and others.	180 3 8	....	17 0 8
85-9	Ditto ..	10,417 7 0	..	1 g. 1 k 1 kt.	Ditto ..	43 6 7	....	5 10 9
88	Ampala, pargana Arsha.	1,364 2 10	Entire	16 annas ..	Bijay Gopal Ganguly and others.	..	180 13 2	..
107-2	Huda-Basudevpur, pargana Arsha.	9,099 11 0	..	2 as. 1 g 1 k. 2 kt. 8 dt	Gour Krishna Sen and others.	1,182 3 2	..	154 4 8
110	Hatikanda Kismat, pargana Hatikanda.	1,279 5 2	Entire	16 annas ..	Birendra Lal Chaudhury and others.	..	1,374 8 5	..
126-Res.	Sitampur, pargana Hatikanda.	2,107 11 0	..	17 g 3 k. 1 dt. share of mauza Gopalpur. 8 as. 6 g 2 k. 2 kt. share of mauza Kamalpur. 7 as. 4 g. 1 k. 2 kt. 7 til share of mauza Dumurdah. 12 as. 1 k. 1 kt. 1 dt. 1 job share of mauza Jaypur 7 as. 9 g. 2 k. 1 kt. 1 dt. 2 job. share of mauza Panchrakhi. 12 as. 6g. 2 k. 2 kt. share of mauza Sivarampur. 12 as 13 g 2 kt 2dt. 2 job 2 til share of mauza Saraswatipur. 16 annas share of mauza Sadhubangali.	Sourendra Nath Chatterjee and others.	987 6 10	..	56 12 1
				10 as. 13 g. 1 k. 1 kt. share of mauza Dakchara.	Akhoy K. Sett and others.			
				8 as. 17 g. 3 k. 1 dt. share of mauza Boga.	Suresh Ch. Ray and others.			

Tauzi No.	Name of mahal and pargana.	Sadar jama of the whole estate.	Whether the whole estate is to be sold.	If only a share is to be sold, specification of such share or shares.	Names of proprietors of property to be sold.	If only a share is to be sold, the sadar jama of such share.	If the whole estate is to be sold, the arrears due from it.	If only a share is to be sold, the arrears due from it.
1	2	3	4	5	6	7	8	9
		Rs. a. p.				Rs. a. p.	Rs. a. p.	Rs. a. p.
126-F.	Sllampur, pargana Hatikanda.	2,107 11 0	.	5 g. 3 k. 2 kt. 1 job share of mauza Joypur; 11 g. 3 k. 1 kt. 2 job share of mauza Panchraki; 4 g. 1 k. 2 kt. 1 dt. share of mauza Sivarampur; 5 g. 2 kt. 2 job share of mauza Saraswatipur; 17 g. 3 k. 1 dt. share of mauza Boga; 4 g. 1 k. 2 kt. 11 til share of mauza Kamalpur.	Bhaja Govinda Ray.	29 14 0	..	2 14 0
126-H.	Ditto ..	2,107 11 0	..	13 g. 1 k. 1 kt. share of mauza Kamalpur. 17 g. 2 k. 2 kt. 27 til share of mauza Dumurdah; 1 a. 15 g. 2 k. 2 dt. share of mauza Panchraki; 13g. 1k. 1kt. share of mauza Sivarampur; 13 g. 1 k. 1 kt. share of mauza Saraswatipur; 17 g. 3 k. 1 kt. share of mauza Jaypur; 2 as. 13 g. 1 k. 1 kt. share of mauza Boga.	Nirmal Chandra Sircar and others. Hara Govinda Roy.	93 4 0	..	5 0 0
126-J.	Ditto ..	2,107 11 0	..	4 g. 1 k. 2 kt 6 til share of mauza Kamalpur; 4 g. 1 k. 2 kt. 6 til share of mauza Dumurdah; 5 g. 3 k. 2 kt. 1 job. share of mauza Jaypur; 11 g. 3 k. 1 kt. 2 job share of mauza Panchraki; 4 g. 1 k. 2 kt. 1 dt. share of mauza Sivarampur; 5 g. 2 kt. 2 job. share of mauza Saraswatipur; 17 g. 3 k. 1 dt. share of mauza Boga.	Mritunjay Ray and others.	29 14 0	..	2 14 0
128	Dadpur, pargana Pownan.	512 9 4	Entire	16 annas ..	Lala Nani Gopal Babu and others.	..	46 14 11	..
134-Res.	Akna, pargana Pownan.	692 9 4	..	8 annas ..	Minor Giridhari Lal Mukherji and others under the guardianship of their mother Annapurna Devi.	346 4 4	..	39 1 1
150	Haripur, pargana Balia.	6,818 1 4	Entire	16 annas ..	Kumud Prokas Ganguly and others as trustees to the estate of late Maharaja Sir Jatindra Mohan Tagore, K.C.S.I.	..	890 9 11	..
153-Res.	Mallikhati, pargana Bora.	2,826 13 0	..	2 as. 13 g. 1 k. 1 kt. ..	Sarat Chandra Goswami.	373 10 4	..	37 12 5
153-C.	Ditto ..	2,826 13 0	..	2 annas ..	Ditto ..	371 0 1	..	38 14 0
153-D.	Ditto ..	2,826 13 0	..	2 annas ..	Ditto ..	371 0 1	..	38 14 0
153-E.	Ditto ..	2,826 13 0	..	1a. 12 g. 1 k. 1 kt. .	Ditto ..	299 14 3	..	31 5 6
153-1.	Ditto ..	2,826 13 0	..	1 a. 12 g. 1 k. 1 kt. ..	Ditto ..	299 13 6	..	31 6 9
153-3.	Ditto ..	2,826 13 0	..	2 annas ..	Ditto ..	371 0 0	..	38 14 0
163	Ohikranda, pargana Darsha.	806 8 8	Entire	16 annas ..	Kumud Prokas Ganguly and others as trustees to the estate of late Maharaja Sir Jatindra Mohan Tagore, K.C.S.I.	..	26 14 10	..
1791	Guptipara Char, pargana Mandalghat.	765 0 0	Do. ..	16 annas ..	Jatindra N. Sen and others.	..	597 0 0	..

Tauzi No.	Name of mahal and pargana.	Sadar jama of the whole estate.	Whether the whole estate is to be sold.	If only a share is to be sold, specification of such share or shares.	Names of proprietors of property to be sold.	If only a share is to be sold, the sadar jama of such share.	If the whole estate is to be sold, the arrears due from it.	If only a share is to be sold, the arrears due from it.
1	2	3	4	5	6	7	8	9
		Rs. a. p.				Rs. a. p.	Rs. a. p.	Rs. a. p.
2034	Sultanpur Char, pargana Patmahal.	938 7 9	Entire	16 annas ..	Sukeshi Dasi ..	..	104 3 0	..
8525	Nada, pargana Bora.	2,968 13 0	Do. ..	16 annas ..	Hrishikesh Chatterji and others.	..	552 8 0	..
3541-Res.	Kharsarai, pargana Bora.	1,311 10 6	..	8 annas ..	Bhujendra N. Biswas and others.	655 13 0	..	108 5 3
3633-Res.	Chutipur and others, pargana Chutipur.	706 8 8	..	5 as. 6 g. 2 k. 2 kt. ..	Birendra Nath Bhattacharji and others.	235 8 8	..	15 2 0
3633-B.	Ditto ..	706 8 8	..	6 as. 13 g. 1 k. 1 kt.	Ditto ..	294 6 0	..	18 6 6
3807-1.	Pariarpur, pargana Bhursit.	1,559 14 11	..	2 annas ..	Nikunja Behari Sinha Ray.	195 0 0	..	8 8 0
3807-2.	Ditto ..	1,559 14 11	..	2 annas ..	Jamini Kanto Sinha Ray and others.	195 0 0	..	7 10 0
3939 A.	Muhammad Amlapur, pargana Bhursit.	79,522 4 9	..	8 annas. S. A. covers the eight annas share of the whole estate minus 16 annas share of mauzas Nigampur, Ganeshpur, Sahana, Sakhya.	Kumar Sarat Kumar Ray Bahadur.	39,396 14 0	..	1,587 7 2
4001	Muhammadpur, pargana Powrah.	593 13 2	Entire	16 annas ..	Kumud Prokas Ganguly and others as trustees to the estate of late Maharaja Sir Jatindra Mohan Tagore, Bahadur, K.C.S.I.	..	62 9 0	..
4082-B.	Kalupukuria, pargana Jahanabad.	13,518 0 0	..	2 as. 13 g. 1 k. 1 kt. share of mauzas Kalupukuria, Ghosepur, Debkhunda, Basantapur, Mamudpur, Joykrishnapur Kismat, Ghosna.	Nakur Ch. Ray and others.	2,253 2 6	..	296 4 5
4082-2.	Ditto ..	13,518 0 0	..	1 a. 17 g. 2 k. 3 job share of mauza Ghosepur 1a. 2g. 1k. 3dt. share of mauza Joykrishnapur Kismat.	Nabakumar Hazra and others.	844 6 9	..	50 0 0
4320	Shyambazar, pargana Jahanabad.	999 7 9	Entire	16 annas ..	Kalipada Ghose and another.	..	124 6 6	..
	Temporarily settled estates.							
3479-Res.	Rasulpur Char, pargana Patmahal.	568 0 0	..	8 annas ..	Khagendranand Asram.	284 0 0	..	71 0 0
3479-1.	Ditto .. (Settled for 15 years from 1st April 1933 to 31st March 1938.)	568 0 0	..	8 annas ..	Prasun Kumari Debi.	284 0 0	..	71 0 0

All shares other than those specified will be excluded from sale.

These estates are being advertised for sale for instalments of revenue which were due on or before the 31st Jaistha, 1343 B.S., of which the latest date of payment was 30th June 1936.

S. P. GHOSE, Collector.

Hooghly, the 24th August 1936.

Notification A.

NOTICE is hereby given under sections 6 and 13, Act XI of 1859, that the undermentioned estates and shares of estates in the district of Rangpur will be put up for sale at the office of the Collector of that district on the 25th September 1936, at 11 a.m., for arrears of revenue (and other demands which by law are realisable as arrears of land revenue).

When in columns 5, 7 and 9 of the following statement it is stated that only a share is to be sold, it is to be understood that a separate account is kept for that share :—

Tauzi No.	Name of mahal and pargana.	Sadar jama of whole estate.	Whether the whole estate is to be sold.	If only a share is to be sold, specification of such share of shares.	Names of proprietors of property to be sold.	If only a share is to be sold, the sadar jama of such share	If the whole estate is to be sold, the arrears due from it.	If only a share is to be sold, the arrears due from it.
1	2	3	4	5	6	7	8	9
		Rs. a. p.				Rs. a. p.	Rs. a. p.	Rs. a. p.
42/1	Kazirhat, hisya 4 annas, Chakle Kazirhat.	10,435 6 4	No ..	1 a. 4 p. share of mauza Begulagari Gayraha, groups A to D, F and G.	Srimanta Narayan Sarker and others.	869 9 8	..	18 11 11
42/5	Ditto ..	10,435 6 4	No ..	8 p. share of the estate .. All other shares besides that specified will be excluded from the sale.	Mahatab Uddin Choudhury	434 13 0	..	45 10 3
47/1	Goragram O'Gayraha, Kazirhat.	4,622 11 5	No ..	1 a. 18 g. 3 c. 1 kg. 3 t. 6½ bahar share of the estate	Mon Mohini Choudhurani and others.	560 11 10	..	58 2 2
47/4	Ditto ..	4,622 11 5	No ..	1 a. 18 g. 3 c. 1 kg. 3 t. 6½ bahar share of the estate All other shares besides that specified will be excluded from the sale.	Bireswar Chatterjee, guardian of Annada Mohan Das and another.	560 13 4	..	58 5 9
48	Jovehandi O'Gayraha, Chakle Kazirhat.	1,541 10 5	Whole	..	Ramani Mohan Choudhury.	..	160 1 10	..
50/1	Ketkibari, Chakle Kazirhat.	1,544 5 8	No ..	6 as 2 g. 3 c share of the estate. All other shares besides that specified will be excluded from the sale.	Munshi Amiruddin Ahmed and others.	590 0 4	..	290 8 7
59-Res.	Matukpur O'Gayraha, Kazirhat.	778 11 0	No ..	16 annas share of mauza Charaikhola, group A. 6 a. 11 g. 2 c share of mauza Matukpur, group B. All other shares besides that specified will be excluded from the sale.	Indu Mohan Goswami and others.	557 10 3	..	58 13 5
73/5	Haron O'Gayraha, hisya 7 annas, Chakle Kazirhat, Fatepur, pargana Kundi.	3,022 13 3	No ..	16 annas share of mauza Hariampur Gayraha, group A. All other shares besides that specified will be excluded from the sale.	Ramani Mohan Choudhury.	2,580 3 3	..	270 2 9
91/1	Paikan, Mesni, Kunda, Kazirhat.	563 10 0	No ..	16 annas share of mauza Paikan, group B. All other shares besides that specified will be excluded from the sale.	Kshirod Behari Saha Choudhuri and others.	506 6 3	..	53 1 6
93	Bisandal O'Gayraha, Kazirhat	1,442 15 10	Whole	....	Jatindra Mohan Roy Choudhury and others.	..	49 11 1	..
99	Bahalipara, hisya 10 annas, Kazirhat.	570 0 0	Do. ..	....	Mihir Kumar Lahiri and others.	..	60 2 1	..
109	Kadikol O'Gayraha, mofalak Lat Cherenga, hisya 6 as 7 g. 1 c. 7 dt., Chakle Kazirhat.	607 1 11	Do. ..	....	Rakhal Chandra Choudhuri.	..	59 9 11	..
119	Charaikhola, Kazirhat.	2,686 14 11	Do. ..	....	Raj Mrityunjoy Roy Choudhury Bahadur.	..	277 5 5	..
120-Res.	Kuchlamar O'Gayraha, Chakle Kazirhat.	1,003 12 3	No ..	16 annas share of mauza Bahalipara, group A. 9 as. 5 g. 1 c. 1 kg. 12 t. share of mauza Bahalipara, group B. All other shares besides that specified will be excluded from the sale.	Kumud Kumar Lahiri and others.	656 12 2	..	62 2 7

Tauzi No.	Name of mahal and pargana.	Sadar jama of whole estate.	Whether the whole estate is to be sold.	If only a share is to be sold, specification of such share or shares.	Names of proprietors of property to be sold.	If only a share is to be sold, the sadar jama of such share.	If the whole estate is to be sold the arrears due from it.	If only a share is to be sold, the arrears due from it.
1	2	3	4	5	6	7	8	9
		Rs. a. p.				Rs. a. p.	Rs. a. p.	Rs. a. p.
131/1	Deslbai Kuthali, Kazirhat.	3,158 10 10	No ..	8annas share of the estate. All other shares besides that specified will be excluded from the sale.	Md. Jasimuddin Choudhury and others.	1,579 5 5	..	162 12 9
147-Res.	Sakhati O'Gayraha, Kazirhat.	2,163 0 1	No ..	10as. 8p. share of the estate. All other shares besides that specified will be excluded from the sale.	Jatindra Mohan Roy Choudhury and others.	1,442 0 1	..	75 5 5
170	Panbari O'Gayraha, Kundi.	623 9 2	Whole	....	Mritunjay Roy Choudhury and others, sebait of Syama Sundari Thakurani.	..	32 11 2	..
232-Res.	Gopal Chak O'Gayraha, Sarhatta.	1,402 4 11	No ..	5as. 6g. 2c. 2kt. share of mauza Chengmari, group B. 2as. 5g. 1c. 2kt. 1dt. 1⅓ job share of mauza Chengmari, group C. 5as. 6g. 3c. 1kt. 2dt. share of mauza Chengmari, group D.	Kalikadas Bandopadhyay and others.	155 11 7	..	12 3 6
232/1	Ditto ..	1,402 4 11	No ..	10 annas share of mauza Chengmari, group A. 10as. 1g. 1c. 2kt. 2dt. 1 job share of mauza Chengmari, group C. 10as. 1g. 1c. 1kt. share of mauza Chengmari, group D.	Indumati Debya and others.	934 14 0	..	74 6 9
232/7	Ditto ..	1,402 4 11	No ..	5as. 6g. 2c. 2kt. share of mauza Ekdala, group B. 1a. 15g. 2c. 2dt. share of mauza Ekdala, group E. All other shares besides that specified will be excluded from the sale.	Shibani Debi, guardian of Karuna Kanta Roy and others.	155 13 0	..	12 6 5
241	Laskarpur O'Gayraha, hisya 9as. 6g. 1c. 1kt., Barabilla.	549 10 1	Whole	....	Priya Nath Roy and others.	..	22 14 1	..
243	Mithipur O'Gayraha, Barabilla.	4,407 0 0	Do. ..	....	Jatindra Mohan Roy Choudhury and others.	..	100 1 10	..
318-Res.	Sangalsi, Kazirhat	1,207 3 0	No ..	8 annas share of the estate.	Brindaban Chandra Roy and others.	513 9 6	..	115 1 9
318/1	Ditto ..	1,207 3 0	No ..	8 annas share of the estate. All other shares besides that specified will be excluded from the sale.	Subashini Majumder and others.	513 9 6	..	115 1 8
648	Osmanpur O'Gayraha, hisya 3as. 8p., Barabilla.	2,934 5 6	Whole	....	Kalipada Chakravorty.	..	184 5 3	..
654/4	Ramchandrapur O'Gayraha, Baisakhpala.	2,371 12 11	No ..	4as. 14g. 1 1/12c. share of the estate. All other shares besides that specified will be excluded from the sale.	Bireswar Chatterjee, Common Manager.	698 13 3	..	516 1 6
693/5	Babanpur, Babanpur.	5,280 1 0	No ..	3as. 14g. 3c. 1kt. 2½dt. share of the estate. All other shares besides that specified will be excluded from the sale.	Ditto	1,237 5 3	..	1,266 7 9
721	Lalbari khasmat pargana, hisya 4 annas, Lalbari.	1,009 11 3	Whole	....	Md. Esarat Ullah Choudhury, Mot., wali of Esaratullah Wakf Estate and others.	..	49 11 2	..
790	Satyendra Nath Khan, Kazirhat.	529 7 5	Do. ..	....	Satyendra Nath Khan.	..	55 0 7	..

This notice is issued in respect of instalments of revenue due on or before the 31st Jaistha, 1343 B. S., of which the latest date of payment was 29th June 1936 A. D.

Rangpur, the 31st August 1936.

A. G. ALLISON, *for* Collector.

Notification A.

NOTICE is hereby given under sections 6 and 13, Act XI of 1859, that the undermentioned estates and shares of estates in the district of Bakarganj will be put for sale at the office of the Collector of that district on the 24th September 1936, at 12 noon, for arrears of revenue and other demands which by law are realizable as arrears of land revenue.

When in columns 5, 7 and 9 of the following statement it is stated that only a share is to be sold, it is to be understood that a separate account is kept for that share :—

Tauzi No.	Name of mahal and pargana.	Sadar jama of whole estate.	Whether the whole estate is to be sold.	If only a share is to be sold, specification of such share or shares.	Names of proprietors of property to be sold.	If only a share is to be sold, the sadar jama of such share.	If the whole estate is to be sold, the arrears due from it.	If only a share is to be sold, the arrears due from it.
1	2	3	4	5	6	7	8	9
		Rs. a. p.				Rs. a. p.	Rs. a. p.	Rs. a. p.
1408	Taluk Abu Mohammad, pargana Bozorgomedpur.	2,965 4 1	..	4 annas share covered by S. A. No. 7.	Uma Kanta Das and others.	741 5 0	..	405 5 0
1436	Taluk Baidyanath Singha pargana Bozorgomedpur.	3,003 0 0	Whole ..	....	Narayan Das Chatterjee.	..	711 9 7	..
1459	Taluk Fateh Chand, pargana Bozorgomedpur.	3,150 8 7	..	Residuary share—7 as. 10g.	Bipin Behari Bose.	1,476 13 2	..	759 12 7
				2as. 16g. 2cr. 2kt. share covered by S. A. No. 1.	Ditto ..	557 14 5	..	287 1 4
				5as. 13g. 1cr. 1kt. share covered by S. A. No. 2 will sold.	Ditto ..	1,115 13 0	..	574 1 0
1482	Taluk Haranath Ghosal, pargana Bozorgomedpur.	4,035 14 6	Whole ..	....	Bomkesh Chatterjee and others.	..	1,262 6 9	..
1510	Mehal Kali Das Ghattak, pargana Bozorgomedpur.	694 5 0	Do. ..	....	Mathura Mohan Das and others.	..	142 0 9	..
1565	Taluk Nabakishore and Brojokishore Datta and others, pargana Bozorgomedpur.	2,956 4 10	Do. ..	....	Satya Santi Mitra and others.	..	1,684 11 4	..
1599	Taluk Rajkishore Rakhit, pargana Bozorgomedpur.	2,138 13 5	..	Residuary share—11 annas will be sold.	Karuna Kanta Ghose and others.	1,470 7 2	..	454 2 11
				All other shares than that specified will be excluded from sale.				
1634	Taluk Ram Raja Gun and Ram Shunder Gun, pargana Bozorgomedpur.	542 11 7	Whole ..	....	Kumar Satya Mohan Ghosal Bahadur and others.	..	154 4 3	..
1671	Taluk Surjyanarayan Sen, pargana Bozorgomedpur.	1,158 8 2	Do. ..	....	Ditto ..	..	299 4 0	..
1677	Taluk Syeduddin Khan and others, pargana Bozorgomedpur.	895 13 6	Do. ..	....	Satya Santi Mitra and others.	..	617 6 5	..
1723	Zamindary share 1a. 17g. 1cr. 2kt., pargana Chandradwip.	9,617 1 0	Do. ..	....	Nanakdehi Barmani, guardian for Monoranjan Prosad Barman.	..	3,274 2 4	..
1740	Taluk Khajenur, share 5as. 6g. 2cr. pargana Chandradwip.	1,544 0 0	..	Residuary share 13 as. 2g. 1cr. will be sold.	Maulvi Sadaruddin Ahmad and others.	1,265 6 0	..	555 10 0
				All other shares than that specified will be excluded from sale.				
1748	Taluk Mohammad Hyat, pargana Chandradwip.	7,062 5 8	..	Residuary share 5as. 2g. will be sold.	Basanta Kumar Guha and others.	2,251 9 4	..	466 12 0
				All other shares than that specified will be excluded from sale.				

Tauzi No.	Name of mahal and pargana.	Sadar jama of whole estate.	Whether the whole estate is to be sold.	If only a share is to be sold, specification of such share or shares.	Names of proprietors of property to be sold.	If only a share is to be sold, the sadar jama of such share.	If the whole estate is to be sold, the arrears due from it.	If only a share is to be sold, the arrears due from it.
1	2	3	4	5	6	7	8	9
		Rs. a. p.				Rs. a. p.	Rs. a. p.	Rs. a. p.
1752	Taluk Raj Ballabh Chakraverty, pargana Chandradwip.	3,258 9 0	..	Residuary share 3as. 6g. 3cr. 2kt. 1dt.	Gonesh Chandra Chatterjee and others.	689 13 0	..	1,391 6 4
				2as. 14g. 2kt. share covered by S. A. No. 3.	Sarat Chandra Ghose, Common Manager.	558 5 0	..	1,126 1 7
1762	Taluk Shibchandra Das, pargana Chandradwip	6,013 1 10	..	Residuary share 2as. 4g. 1cr. 1 kt. 15 til.	Binoy Krishna Mukherjee and others.	833 12 10	..	94 0 0
2048	Mehal Kalmir Char, pargana Taraf Kalmir Char.	1,846 10 8	..	Residuary share 14as. 5g.	Mohammad Nural Huda Munshi and others.	1,644 10 8	..	822 14 0
2708	Zamindary share 1 a. 10g., pargana Utter Sahabajpur.	1,494 6 5	Whole ..	....	Rajkumari Debi	..	576 0 0	..
2749	Taluk Durgagangeswar, pargana Utter Sahabajpur.	1,037 11 2	..	8 annas share covered by S. A. No. 1.	Provat Chandra Roy and others.	518 13 8	..	54 6 4
3029	Taluk Sriram Sen, pargana Utter Sahabajpur.	784 12 11	Whole ..	....	Dwaraka Natha Sirkar.	..	196 3 4	..
3256	Zamindary share 2 annas, pargana Ratandi Kalikapur.	3,154 6 9	..	Residuary share 13 as. 6 g. 2 cr. 2 kt.	Abdul Kader Choudhuri.	2,628 11 0	..	1,270 12 6
				2 as. 13 g. 1 cr. 1 kt. covered by S. A. No. 1 will be sold.	Biroja Sundari Choudhurani.	525 11 9	..	63 0 5
3257	Zamindary share 4 annas, pargana Ratandi Kalikapur.	6,308 12 0	..	13g. 3cr. share covered by S. A. No. 5.	Taraprosanna Guha and others.	1,084 5 4	..	58 5 0
				10 g. 2½ cr. share covered by S. A. No. 6 will be sold.	Abdul Kader Choudhuri.	837 14 6	..	90 2
				All other shares than that specified will be excluded from sale.				
3258	Zamindary share 4 annas, pargana Ratandi Kalikapur.	6,308 12 0	..	9 g. 2 cr. 2 kt. share covered by S. A. No. 5.	Taraprosanna Guha and others.	722 13 9	..	44 15 2
				15g. 3cr. 2½ kt. share covered by S. A. No. 6.	Abdul Kader Choudhury.	1,256 12 10	..	156 6 3
				14 g. ½ kt. share covered by S. A. No. 7.	Abdul Gafur Choudhury.	1,108 15 3	..	138 0 3
3266	Zamindary share 3 annas, pargana Sahajpur.	857 13 4	Whole ..	....	Kali Kumar Gangooli, Common Manager.	..	79 14 6	..
3841	Zamindary share 2as. 17g. 2cr., pargana Seligabad.	17,976 2 6	..	Residuary share 5as. 6g. 2cr. 2kt. will be sold.	Kumar Satya Mohan Ghosal Bahadur and others.	5,999 0 11	..	1,988 14 0
				All other shares than that specified will be excluded from sale.				
3843	Zamindary share 13 gandas pargana Seligabad.	9,593 6 8	..	8 annas share covered by S. A. No. 1 will be sold.	Haran Chandra Sen (Pleader), Receiver.	1,796 11 4	..	840 4 7
				All other shares than that specified will be excluded from sale.				
3851	Zamindary share 10 as. 4 g., pargana Seligabad.	8,280 11 4	Whole ..	....	Indubhusan Das Gupta and others.	..	451 12 4	..
4530	Ranganali Abad, pargana Chandradwip.	19,068 0 0	Do. ..	....	Asutosh Roy Choudhury and others, Trustees.	..	14,068 0 0	..

Tauzi No	Name of mahal and pargana.	Sadar jama of whole estate.	Whether the whole estate is to be sold	If only a share is to be sold, specification of such share or shares.	Names of proprietors of property to be sold	If only a share is to be sold, the sadar jama of such share.	If the whole estate is to be sold, the arrears due from it.	If only a share is to be sold, the arrears due from it
1	2	3	4	5	6	7	8	9
		Rs. a. p.				Rs a. p	Rs a. p	Rs. a p.
4554	Kismat Kewabunia, pargana Aurangpur	1,320 1 3	Whole ..	. .	Satya Santi Mitra and others.	.	1,120 1 3	
4556	Bara Bighai Abad Osat Taluk Jagadambha, pargana Aurangpur.	1,478 0 10	Do. ..	....	Ditto ..	..	1,248 0 10	..
4575	Char Baraikaran, pargana Selimabad.	541 0 0	Do. ..	....	Kumar Satya Mohan Ghosal Bahadur and others.		141 0 0	..
4605	Char Samajdi Baligaun, pargana Salatanagore	2,197 0 0	Do. ..	....	Satish Chandra Das and others.	..	131 5 4	..
4624	Jhanjhania Namajpur, pargana Selimabad	609 0 0	Do. ..	....	Saroj Kumar Bose and others, Common Manager.	..	359 0 0	..
4625	Dari Char Gazipur, pargana Selimabad	2,357 0 0	Do. ..	....	K. S. Banerjee, Official Receiver	..	557 0 0	..
4734	Char Sachilapur Kistakati, pargana Selimabad	996 0 0	Do. ..	....	Kumar Satyamohan Bahadur and others.	..	196 0 0	.
4933	New Char Khajuria, pargana Chandradwip.	3,773 0 0	Do. ..	....	Dilip Kumar Roy Choudhury and others.	..	2,515 0 0	..
5202	Char Udyapur, pargana Jazira	1,416 0 0	....	Residuary share 8 annas will be sold. All other shares than that specified will be excluded from sale.	Tara Prosanna Guha.	708 0 0	..	22 8
5209	Mauza Shibpur in Taluk Ramdeb Datta, pargana Gopalpur Mirzanagore.	1,751 0 0	Whole ..	....	Ditto ..	.	284 0 0	..
5210	Mauza Mahadebpur in Taluk Ramdeb Datta, pargana Gopalpur Mirzanagore.	760 0 0	Do. ..	....	Ditto ..	..	24 0 0	
5234	Char Padma, pargana Dakhin Sahabajpur.	5,957 0 0	Do. ..	....	Sushil Kumar Roy Choudhury and others.	..	3,357 0 0	
5285	Char Joynagore, pargana Utter Sahabajpur.	29,423 11 0	The 16 annas interest of the temporary proprietary and farming settlement of the entire estate will be sold for the unexpired portion of the period of 15 years from 1st April 1929 to 31st March 1944 for which period temporary proprietary and farming settlement of the entire estate was made with the 4 annas proprietor of the estate Babu Saradindu Mukherjee.	The 4 annas proprietary right of Babu Saradindu Mukherjee in the estate will be sold The proprietary right in the remaining 12 annas share, the owners of which refused settlement at the last revisional settlement and are receiving a malikana of Rs 1,875 annually from Government, will not be sold but the purchaser of the 4 annas share will be entitled to the farming settlement for the remainder of the term of settlement. At the resettlement of the estate on the expiry of the current settlement the right of the said 12 annas proprietors to get settlement will remain intact.	1. Probhabati Debi—4 annas share. 2. Sukhendra Nath Ghose, Administrator to the estate of Surath Kumari—8 annas share. 3 Babu Saradindu Mukherjee—4 annas share The temporary proprietary and farming settlement holder of the entire estate being the said Babu Saradindu Mukherjee, the owner of the 4 annas proprietary right as mentioned above.	..	42,068 2 9	
6080	Taluk Howla Ananta Ram Nag, Kismat Nyamati, pargana Bazorgomedpur.	729 15 9	Whole ..	....	Abinash Chandra Banerjee, Trustee.	..	279 15 9	..

Tauzi No.	Name of mahal and pargana.	Sadar jama of whole estate.	Whether the whole estate is to be sold.	If only a share is to be sold, specification of such share or shares.	Name of proprietors of property to be sold.	If only a share is to be sold, the sadar jama of such share.	If the whole estate is to be sold, the arrears due from it.	If only a share is to be sold, the arrears due from it.
1	2	3	4	5	6	7	8	9
		Rs. a. p.				Rs. a. p.	Rs. a. p.	Rs. a. p.
6331	Char Madhab Roy, etc., S. A. to Bidyanandapur, pargana Saistabad.	874 0 0	Whole ..	....	Nawabjada Syed Fazle Rabbi Choudhuri Motwalli.	..	437 0 0	.
6410	S. A. to mauza Sakuchia, pargana Abdullapur.	1,042 0 0	Do. ..	....	Tahera Khatoon Choudhurani.	..	307 3 0	..
6457	Zamindary Srikanta Roy Choudhuri, pargana Aurangpur.	1,195 10 0	Do. ..	....	Umesh Chandra Banerjee and others	..	295 8 9	.
6459	Zamindary Kaliprosad Roy Choudhury, pargana Aurangpur.	580 0 0	Do. ..	....	Brojo Kanta Roy Choudhury.	..	72 3 0	..
6462	Zamindary Kalidas Roy Choudhury, pargana Aurangpur.	894 1 0	Do. ..	....	Ajita Sundari Debya	..	110 12 0	..
6474	S. A. to Estate Nos. 1730 and 1715, mauzas Kalir Char and Shibar Char, pargana Chandradwip.	9,454 0 0	Do. ..	....	Sourindra Nath Mitra and others, Joint Receivers.	..	30,778 15 11	..
6571	S. A. to Bagura Abkanda 1st part, pargana Chandradwip.	857 0 0	Do. ..	....	Ramani Mohan Roy Choudhury and others.	..	208 8 0	..
6672	S. A to mauza Banlari, pargana Salimabad.	9,156 0 0	Do ..	....	Saroj Kumar Bose, Common Manager.	..	600 0 0	..
6674	S. A. to Raghunathpur, pargana Salimabad.	1,088 0 0	Do. ..	....	Ditto	..	900 0 0	..
6734	S. A to Shibar Char, pargana Chandradwip.	2,126 0 0	Do. ..	....	Satya Santi Mitra and others.	..	6,381 0 0	..
6736	S. A. to Panchkhali and Kalir Char, pargana Chandradwip.	1,288 0 0	Do. ..	....	Ditto ..	..	2,275 8 10	..
6751	Taluk Narainarayan Ghosr, pargana Balarampur Sujabad.	1,529 0 3	....	12 annas share covered by S. A. No. 1 will be sold. All other shares than that specified will be excluded from sale.	Sananda Chandra Shaha Choudhury.	1,146 12 0	..	111 6
6759	S. A. to Char Kalmi Ar Kalmi, pargana Taraf Kalmi.	5,116 0 0	Whole ..	....	Sauriudra Nath Mitra and others, Joint Receivers.	..	12,076 7 9	..
7063	Taluk Mohammad Yusuf, pargana Bozergomedpur.	563 12 0	Do. ..	....	Mohammad Yusuf	.	8 8 6	..

The above estates are being advertised for sale for the instalments of revenue which were due on or before the 31st Jaistha, 1343 B.S., the latest date of payment of which was 28th June 1936.

Barisal, the 31st August 1936.

[ILLEGIBLE], *for* Collector.

Notification A.

NOTICE is hereby given under sections 6 and 13, Act XIV of 1859, that the undermentioned estates and shares of estates in the district of Bakarganj will be put up for sale at the office of the Collector of that district on the 24th September 1936 at 12 noon for arrears of revenue and other demands which by law are realizable as arrears of land revenue :—

Tauzi No.	Name of mahal and pargana	Sadar jama of whole estate.	Whether the whole estate is to be sold.	If only a share is to be sold, specification of such share or shares.	Names of proprietors of property to be sold.	If only a share is to be sold, the sadar jama of such share.	If the whole estate is to be sold, the arrears due from it.	If only a share is to be sold, the arrears due from it.
1	2	3	4	5	6	7	8	9
		Rs. a. p.				Rs. a. p.	Rs. a. p.	Rs. a. p.
4526	Houla No. 1 in Karalbaria, pargana Sundarbans.	4,525 0 0	Whole	....	Girindra Mohan Ghose.	..	1,539 13 11	..
4532	Houla No. 55 in Abad Debpur, pargana Sundarbans.	1,108 13 0	Do. ..	....	Abdul Latif Houladar and others.	..	1,033 13 0	..
4538	Houla No. 432 in Abad Taktabunia, pargana Sundarbans.	615 0 0	Do. ..	....	Sukumar Sen and others.	..	1,159 15 0	..
4538	Houla No. 524 in Abad Taktabunia, pargana Sundarbans.	669 9 0	Do. ..	....	Ditto ..	..	1,265 8 0	..
4538	Houla No. 644 in Abad Taktabunia, pargana Sundarbans.	501 0 0	Do. ..	....	Ditto ..	..	1,002 0 0	..
4548	Houla No. 6 in Abad Krishnapura, pargana Sundarbans.	562 12 0	Do. ..	....	Manindra Nath Chakrabarty, Executor.	..	276 1 1	..
4573	Houla No. 162 in Chak Kalamegha, mauza Char Duanal, pargana Sundarbans.	762 8 0	Do. ..	....	Subodh Chandra Mitra and others.	..	610 0 0	..
4581	Petao Taluk No. 213 in Chhota Baliatali, pargana Sundarbans.	977 15 0	Do. ..	....	Rash Behari Ghose	..	977 15 0	..
4583	Houla No. 333 in Dhulashar, pargana Sundarbans.	1,252 18 0	Do. ..	....	Nehaluddin Houlader and others.	..	210 13 0	..
4643	Taluk No. 2 in Bazarghona, pargana Sundarbans.	7,611 0 0	Do. ..	....	Hem Kanta Sen Ray Chaudhury.	..	5,411 0 0	..
4645	Sikimi Taluk No. 2 in Patukhali, pargana Sundarbans.	4,575 0 0	Do. ..	....	Ranajit Ray Chaudhury.	..	3,575 0 0	..
4657	Jote No. 35 in Char Badna, pargana Jazira.	805 10 0	Do. ..	....	Abdul Hamid Chaudhury.	..	505 10 0	..
4791	Abadkari Jote No. 101 in Char Nopattashi, pargana Jazira.	876 0 0	Do. ..	....	Abdul Gafur and others.	..	876 0 0	..
4791	Abadkari Jote No. 263 in Char Nopattashi, pargana Jazira.	777 14 0	Do. ..	....	Radhika Prosad Sarkar and others.	..	777 14 0	..
4798	Nimhoula No. 55 in Char Algi, pargana Ratandi Kalikapur.	567 0 0	Do. ..	....	Sekander Mean	..	567 0 0	..
4798	Nimhoula No. 169 in Char Algi, pargana Ratandi Kalikapur.	731 10 0	Do. ..	....	Ditto ..	..	381 10 0	..
5107	Houla No. 418 in Chak Dhalua, mauza Dhalua, pargana Sundarbans.	1,785 7 0	Do. ..	....	Khirode Lal Kunda and others.	..	685 7 0	..
5007	Houla No. 154 in Chak Dhalua, mauza Nali, pargana Sundarbans.	556 14 0	Do. ..	....	Prosanna Kumar Das and others.	..	239 5 8	..
5007	Houla No. 54 in Chak Dhalua, mauza Charakgachia, pargana Sundarbans.	645 1 0	Do. ..	....	Fetaruddi and others.	..	312 9 3	..
5007	Houla No. 117 in Chak Dhalua, mauza Charakgachia, pargana Sundarbans.	692 12 0	Do. ..	....	Asimoddi and others	..	330 5 1	..
5007	Houla No. 253 in Chak Dhalua, mauza Charakgachia, pargana Sundarbans.	673 14 0	Do. ..	....	Abdul Koddus and others.	..	388 0 11	..
5007	Houla No. 357 in Chak Dhalua, mauza Charakgachia, pargana Sundarbans.	619 6 0	Do. ..	....	Abi Abdulla and others.	..	319 6 0	..

Tauzi No.	Name of mahal and pargana.	Sadar jama of whole estate.	Whether the whole estate is to be sold.	If only a share is to be sold, specification of such share or shares	Names of proprietors of property to be sold.	If only a share is to be sold, the sadar jama of such share.	If the whole estate is to be sold, the arrears due from it.	If only a share is to be sold, the arrears due from it.
1	2	3	4	5	6	7	8	9
		Rs. a. p.				Rs. a. p.	Rs. a. p.	Rs. a. p.
5007	Houla No. 716 in Chak Dhalua, mauza Charbankgachia, pargana Sundarbans.	568 0 0	Whole	....	Nabin Chandra Chakrabarty.	..	318 0 0	..
5007	Houla No. 748 in Chak Dhalua, mauza Charbankgachia, pargana Sundarbans.	508 14 0	Do. ..	....	Manoranjan Chakrabarty.	..	233 14 0	..
5007	Jote No. 763 in Chak Dhalua, mauza Charbankgachia, pargana Sundarbans.	545 10 0	Do. ..	....	Billatali and others.	..	280 10 0	..
5007	Joto No. 782 in Chak Dhalua, mauza Charbankgachia. pargana Sundarbans.	594 3 0	Do. ..	....	Haji Bhaloo and others.	..	284 3 0	..
5007	Jote No. 224 in Chak Dhalua, mauza Charbankgachia, pargana Sundarbans.	552 15 0	Do. ..	....	Abdul Kader and others.	..	276 7 6	..
5008	Houla No. 46 in Chak Bargana, mauza Bargana, pargana Sundarbans.	1,266 4 0	Do.	....	Afiluddi and others.	..	632 8 0	..
5008	Houla No. 344 in Chak Bargana, mauza Bargana, pargana Sundarbans.	1,088 10 0	Do. ..	....	Gaganali and others	..	936 4 0	..
5008	Houla No. 551 in Chak Bargana, mauza Bargana, pargana Sundarbans.	1,282 14 0	Do. ..	....	Rajani Kanta Gope and others.	..	223 14 0	..
5008	Houla No. 603 in Chak Bargana, mauza Bargana, pargana Sundarbans.	508 6 0	Do. ..	....	Sarada Charan Sarkar.	..	406 12 0	..
5008	Houla No. 742 in Chak Bargana, mauza Bargana, pargana Sundarbans.	681 2 0	Do. ..	....	Srijanali and others	..	100 0 0	..
5008	Houla No. 30 in Chak Bargana, mauza Kroke, pargana Sundarbans.	1,041 14 0	Do. ..	....	Hazrat Ali Mean ..	..	541 14 0	..
5008	Houla No. 85 in Chak Bargana, mauza Kroke, pargana Sundarbans.	1,448 15 0	Do.	....	Nakulowar Kapali and others.	..	1,287 14 0	..
5008	Houla No. 224 in Chak Bargana, mauza Kroke, pargana Sundarbans.	1,773 11 0	Do. ..	....	Mehoraddandothers	..	882 6 0	..
5008	Houla No. 65 in Chak Bargana, mauza Helibunia, pargana Sundarbans.	597 2 0	Do. ..	....	Adamali and others	..	284 4 0	..
5008	Houla No. 99 in Chak Bargana, mauza Helibunia, pargana Sundarbans.	600 8 0	Do. ..	....	Ditto ..	..	600 8 0	..
5008	Houla No. 296 in Chak Bargana, mauza Helibunia, pargana Sundarbans.	674 2 0	Do. ..	....	Gaganandothers ..	..	346 1 8	..
5008	Houla No. 333 in Chak Bargana, mauza Helibunia, pargana Sundarbans.	520 15 0	Do. ..	....	Ditto ..	..	500 15 0	..
5008	Houla No. 305 in Chak Bargana, mauza Helibunia, pargana Sundarbans.	595 0 0	Do. ..	....	Ditto ..	..	282 2 8	..
5008	Houla No. 404 in Chak Bargana, mauza Helibunia, pargana Sundarbans.	793 7 0	Do. ..	....	Azaharuddin Ahmed	..	656 14 0	..
5008	Houla No. 517 in Chak Bargana, mauza Helibunia, pargana Sundarbans.	552 15 0	Do. ..	....	Dwarika Nath Sen and others.	..	247 15 0	..
5008	Houla No. 565 in Chak Bargana, mauza Helibunia, pargana Sundarbans.	582 6 0	Do. ..	....	Prosanna Kumar Das and others.	..	269 12 0	..
5008	Houla No. 745 in Chak Bargana, mauza Helibunia, pargana Sundarbans.	767 7 0	Do. ..	....	Mohini Mohan Das	..	767 7 0	..

Tauzi No.	Name of mahal and pargana.	Sadar jama of whole estate	Whether the whole estate is to be sold	If only a share is to be sold, specification of such share or shares	Names of proprietors of property to be sold	If only a share is to be sold, the sadar jama of such share.	If the whole estate is to be sold, the arrears due from it.	If only a share is to be sold, the arrears due from it.
1	2	3	4	5	6	7	8	9
		Rs. a. p.				Rs. a. p.	Rs. a. p.	Rs. a. p.
5008	Houla No. 920 in Chak Barguna, mauza Hellibunia, pargana Sundarbans	837 15 0	Whole	....	Raimohan Chaudhury and others.	..	287 15 0	..
5008	Houla No. 4 in Chak Barguna, mauza Maitha, pargana Sundarbans.	1,029 6 0	Do. ..	....	Abani Mohan Chatterjee and others.	..	504 6 0	..
5008	Houla No. 55 in Chak Barguna, mauza Maitha, pargana Sundarbans.	2,815 15 0	Do. ..	....	Akhoy Kumar Shaha and others.	..	1,907 15 6	..
5008	Houla No. 135 in Chak Barguna, mauza Maitha, pargana Sundarbans.	511 11 0	Do. ..	....	Abdul Latif and others.	..	256 11 0	..
5008	Houla No. 173 in Chak Barguna, mauza Maitha, pargana Sundarbans.	580 14 0	Do. ..	....	Mahammad and others.	..	200 14 0	..
5008	Houla No. 227 in Chak Barguna mauza Maitha, pargana Sundarbans.	1,040 10 0	Do. ..	....	Dakhina Ranjan Gope.	..	471 4 0	..
5008	Houla No. 307 in Chak Barguna, mauza Maitha, pargana Sundarbans.	606 12 0	Do. ..	....	Mohini Mohan Das	..	453 1 9	..
5008	Houla No. 534 in Chak Barguna, mauza Maitha, pargana Sundarbans.	1,040 10 0	Do. ..	..	Tozambar Ali ..	..	456 4 0	..
5008	Houla No 667 in Chak Barguna, mauza Maitha, pargana Sundarbans.	593 8 0	Do. ..	....	Raimohan Chaudhury and others.	..	293 3 0	..
5008	Houla No. 491 in Chak Barguna, mauza Rakhachandi, pargana Sundarbans.	628 13 0	Do. ..	....	Hasanuddi and others.	..	296 6 5	..
5008	Houla No 545 in Chak Barguna, mauza Rakhachandi, pargana Sundarbans.	697 14 0	Do. ..	....	Sashi Kumar Das and others.	..	353 12 0	..
5008	Houla No. 41/68 in Chak Barguna, mauza Baliatali, pargana Sundarbans	597 10 0	Do. ..	....	Afaruddi and others.	..	356 1 9	..
5008	Houla No. 80 in Chak Barguna, mauza Baliatali, pargana Sundarbans.	649 13 0	Do. ..	....	Dhalai and others	..	394 10 0	..
5215	Houla No. 349 in Madhupura, pargana Jazira.	1,086 0 0	Do. ..	....	Chand Bibi and others.	..	597 0 0	..
5215	Houla No. 607 in Madhupura, pargana Jazira.	1,078 4 0	Do. ..	....	Haran Chandra Das	..	1,078 4 0	..
5216	Houla No. 1460 in Char Bairagia, pargana Jazira.	2,419 2 0	Do. ..	....	Prokash Chandra Datta.	..	1,619 1 11	..
5226	Houla No 244 in Golakpura, pargana Dakhin Shahabazpur.	911 7 0	Do. ..	....	Sashi Kumar Das	..	491 7 0	..
5226	Houla No. 281 in Golakpura, pargana Dakhin Shahabazpur.	615 0 0	Do. ..	....	Sreenath Shaha ..	..	284 6 2	..
5226	Houla No. 322 in Golakpura, pargana Dakhin Shahabazpur.	1,072 13 0	Do. ..	....	Ditto ..	..	965 10 0	..
5229	Houla No. 3 in Ratanpura, pargana Uttar Shahabazpur.	651 15 0	Do. ..	....	Annada Charan Ghose.	..	1,008 12 0	..
5229	Houla No. 59 in Ratanpura, pargana Uttar Shahabazpur.	596 1 0	Do. ..	....	Madan Mohan Ray and others.	..	296 1 0	..
5229	Houla No. 126 in Ratanpura, pargana Uttar Shahabazpur	542 10 0	Do. ..	....	Montazuddi Mean and others.	..	542 10 0	..
5230	Houla No. 435 in Bara Dhali, pargana Dakhin Shahabazpur.	1,640 7 0	Do. ..	....	Tofel Ahmed Chaudhury and others.	..	1,601 5 0	..

Tauzi No.	Name of mahal and pargana.	Sadar jama of whole estate.	Whether the whole estate is to be sold.	If only a share is to be sold, specification of such share or shares.	Names of proprietors of property to be sold.	If only a share is to be sold, the sadar jama of such share.	If the whole estate is to be sold, the arrears due from it.	If only a share is to be sold, the arrears due from it.
1	2	3	4	5	6	7	8	9.
		Rs a p.				Rs. a. p.	Rs. a. p.	Rs. a. p.
5235	Houla No. 19 in Char Talgi, pargana Dakhin Shahabazpur	1,931 3 0	Whole	....	Mahesh Chandra Podder.	..	3,231 3 0	..
5236	Houla No 16 in Dhali Gournagar, pargana Dakhin Shahabazpur	586 10 0	Do.	....	Promatha Nath Sarkar.	..	390 10 0	..
5236	Houla No. 210 in Dhali Gournagar pargana Dakhin Shahabazpur.	1,608 9 0	Do.	....	Charu Bala Devi ..	..	843 2 4	..
5236	Houla No. 352 in Dhali Gournagar, pargana Dakhin Shahabazpur.	2,161 2 0	Do.	....	Ditto ..	..	879 2 0	..
5239	Houla No. 3 in Madhyam Lamchi Dhali, pargana Dakhin Shahabazpur	3,021 13 0	Do.	....	Annada Prosad Nath.	..	1,750 0 0	..
5242	Abadkari Taluk No. 2 in Manpura, pargana Jazira.	2,615 9 0	Do.	....	Raj Narain Tribedi	..	1,610 9 0	..
5246	Houla No 123 in Dhali Gournagar, pargana Dakhin Shahabazpur.	743 6 0	Do.	...	Tofazzal Bari ..	..	397 13 8	..
5246	Houla No 202 in Dhali Gournagar, pargana Dakhin Shahabazpur.	979 2 0	Do.	....	Harimohan Shaha	..	519 2 0	..
5246	Houla No. 254 in Dhali Gournagar, pargana Dakhin Shahabazpur	1,375 13 0	Do.	....	Badsha Mean ..	..	891 14 7	..
5246	Houla No. 801 in Dhali Gournagar, pargana Dakhin Shahabazpur.	536 6 0	Do.	....	Basanta Kumar Lode	..	536 6 0	..
5257	Houla No. 2 in Char Krista Prosad, pargana Jazira.	7,688 0 0	Do.	....	Murari Mohan Mukherjee.	..	3,120 3 10	..
5268	Abadkari Taluk No. 2 in Char Manpura, pargana Jazira.	1,492 0 0	Do.	....	Jeb da Khatun and others.	..	2,226 0 0	..
6496	Taluk No 2 in Chak Naltoia, pargana Sundarbans.	6,291 0 0	Do.	....	Surendra Nath Sen Ray Chaudhury.	..	2,960 0 0	..
6569	Osat houla No. 103. 12 in Char Easson, pargana Jazira.	939 3 0	Do.	....	Jalal Ahammad ..	..	535 1 8	..
6569	Osat houla No. 1135, 238 in Char Easson, pargana Jazira.	538 3 0	Do.	....	Darbesh Ali and others.	..	377 10 9	..
6695	Osat Taluk No. 3 in Ishabunda, pargana Sehmabad.	631 5 0	Do	....	Bimola Sundari Chaudhurani.	..	631 5 0	..

The above tenures are being advertised for sale for the instalments of revenue which were due on or before 29th Falgun, 1343 B.S., the latest date of payments of which was 28th March 1936.

Barisal, the 31st August, 1936.

[ILLEGIBLE] *for* Collector.

Notification A.

NOTICE is hereby given under sections 6 and 13, Act XI of 1859, that the undermentioned estates and shares of estates in the district of Midnapore will be put up for sale at the office of the Collector of that district on the 25th September 1936, at 12 noon, for arrears of revenue* and other demands, which by law are realizable as arrears of land revenue.

When in columns 5, 7 and 9 of the following statement it is stated that only a share is to be sold, it is to be understood that a separate account is kept for that share :—

Tauzi No.	Name of mahal and pargana.	Sadar jama of whole estate.	Whether the whole estate is to be sold.	If only a share is to be sold, specification of such share or shares.	Names of proprietors of property to be sold.	If only a share is to be sold, the sadar jama of such share.	If the whole estate is to be sold, the arrears due from it.	If only a share is to be sold, the arrears due from it.
1	2	3	4	5	6	7	8	9
		Rs. a. p.				Rs. a. p.	Rs. a. p.	Rs. a. p.
163	Pargana Barada, estate Barada Tappa.	53,546 0 0	..	Separate Account No 1—8 annas share of the mahal. All other shares than those specified will be excluded from the sale.	Radhikalal Goswami and others.	25,852 13 4	..	2,841 4 8
812	Pargana Batitaki, estate Palgora.	630 1 7	Entire	....	Sri Kishan Darghar.	..	79 4 0	..
827	Pargana Birkul, estate Dihi-baranga *alias* Dibaranga.	3,195 3 8	..	Residuary Account— 3 as. 12 gds. 3 k. 15 til share of mauza Baranga. 2 as. 5 gds. share of mauzas Rania and Hajipur in one group. 3 as. 3 k. 8 til share of mauza Jharpadima. 3 as. 15 gds. share of mauzas Arjuni and Shan Balishai in one group. 2 annas share of mauza Kulbudhi. 5 as. 8 gds. 1 k. 1 kt. share of mauza Bagmari. 2 as. 5 gds. share of mauzas Fatehpur, Pariharpur and Joshipur in one group. 11 as. 5 gds. share of mauzas Kabra and Jhangeria in one group. 5 as. 1 gd. 1 k. share of mauza Birampur. All other shares than those specified will be excluded from the sale.	Bhudar Behari Chaudhuri and others.	517 10 1	..	121 0 8
440	Pargana Chandrakona, mahal Beraberia.	10,925 8 5	..	Separate account No. 2—16 annas share of mauza Kamargeria (Nil).	Khudiram Mukhapadhya and others.	1,813 6 6	..	236 9 9
				Separate Account No. 6—16 annas share of mauzas Beraberia, Hijli and Hiradharpur. All other shares than those specified will be excluded from the sale.	Ramprasad Roy and others.	1,365 11 8	..	178 3 8
478	Pargana Chandrakona, mahal Kuldaha.	10,784 7 2	..	Separate Account No. 1—4 as. 5 gds. 1 k. 1 kt. share of the mahal. All other shares than those specified will be excluded from the sale.	Debendra Lal Khan and others.	2,875 13 8	..	372 11 0
510	Pargana Chandrakona, mahal Rameswarpur.	11,594 11 8	Entire	....	Monoharlal Sil ..	..	1,517 1 8	..
548	Pargana Chetua, mahal Gangpur.	8,143 13 10	Do. ..	....	Janakilal Khandelwala.	..	3,843 8 10	..
953	Pargana Kasijora, mahal Harinarayanchak.	2,397 10 3	Do. ..	....	Munshi Abdul Jalil.	..	892 10 0	..
954	Pargana Kasijora, mahal Harijhama.	3,135 10 2 including police.	..	Separate Account No. 1—4 as. 5 gds. 1 k. share of the mahal. All other shares than those specified will be excluded from the sale.	Khirode Nath Bandopadhya.	833 15 8 including police.	..	91 4 0 including police.
1089	Pargana Kismat Kasijora, mahal Gopalnagar.	1,511 0 9	Entire	....	Bhuban Mohan Jana and others.	..	637 0 8	..

Tauzi No.	Name of mahal and pargana.	Sadar jama of whole estate.	Whether the whole estate is to be sold.	If only a share is to be sold, specification of such share or shares.	Names of proprietors of property to be sold.	If only a share is to be sold, the sadar jama of such share.	If the whole estate is to be sold, the arrears due from it.	If only a share is to be sold, the arrears due from it.
1	2	3	4	5	6	7	8	9
		Rs. a. p.				Rs. a. p.	Rs. a. p.	Rs. a. p.
1042	Pargana Kismat Kasijora, mahal Jagatpore.	852 11 8	..	Residuary Account—12 annas share of the estate. All other shares than those specified will be excluded from the sale.	Raj Kristo Mukhapadhya.	630 8 9	..	69 8 4
1196	Pargana Kedarkundu, mahal Gagram.	724 12 0	..	Residuary Account—16 annas share of mauzas Dayalpur, Palgeria and Sutchhora. All other shares than those specified will be excluded from the sale.	Narendra Kumar Nag.	573 13 4	..	62 [illegible] 8
1466	Pargana Khandar, mahal Barbanshi.	19,084 9 0	..	Residuary Account-2as. 13gds. 1k. 1kt. share of mauza Chandagobra. 10as. 13gds. 1k. 1kt. share of mauza Chaksafi. 1a. 6gds. 2k. 2kt. share of mauzas Daurra, Kharika and Bangaldari. 1a. 6gds. 2k. 2kt. share of mauza Kharika. 1a. 6gds. 2k. 2kt. share of mauza Chandkuri. 2as. 13gds. 1k. 1kt. share of mauza Nibra. 5as. 6gds. 2k. 2kt. share of mauzas Satsai, Madhalpur and Protappore. 3as. 12gds. share of mauza Chaulkhola. 1a. 6gds. 2k. 2kt. share of mauzas Chandkuri, Batitaki and Chandkuri. 2as. 13gds. 1k. 1kt. share of mauzas Bara Chahara, Ledhua, Sanchahara. 10 as. 13 gds. 1 k. 1 kt. share of mauzas Nayanchak and Banai. 1 a. 6 gds 2 k. 2 kt. share of mauzas Chandkuri and Khoramchak. 1 a. 6gds. 2 k. 2 kt. share of mauzas Chandkuri (Paragangadaschak) and Mazzafarchak. Separate Account No. 52— 7 as. 11 gds. 2 k. 2 kt. share of mauza Uttar Eral. 5 as 6gds 2 k. 2 kt. share of mauza Masagram. 2 as. 13 gds. 1 k. 1 kt. share of mauzas Malpur and Malpurbati. 5 as. 6gds. 2 k. 2 kt. share of mauzas Mirzachak, Pudrangi, Koptipur and Rollanda. All other shares than those specified will be excluded from the sale.	Pulin Behari Dutt and others. Haripada Atta and others.	1,015 0 9 1,649 4 3	..	0 8 11 180 6 0
1604	Pargana Khandar, mahal Kolanda.	3,542 0 6	Entire	. . .	Chowdhury Kalipada Mallick and others.	..	388 0 0	..
1660	Pargana Khandar, mahal Panchpara.	4,053 11 5	..	Separate Account No. 10— 2 as. 1 gd. 3 k. 2 kt. share of mauzas Chak Abdulla, Arun Fatehchak, Jamnua, Baligeria and Ranibati. 2 as. 13 gds. 1 k. 1 kt. share of mauzas Basantapur and Lokshya in one group. All other shares than those specified will be excluded from the sale.	Dhirendra Nath Ghose and another.	982 11 0	..	107 7 9

Tauzi No.	Name of mahal and pargana.	Sadar jama of whole estate.	Whether the whole estate is to be sold.	If only a share is to be sold, specification of such share or shares.	Names of proprietors of property to be sold.	If only a share is to be sold, the sadar jama of such share.	If the whole estate is to be sold, the arrears due from it.	If only a share is to be sold, the arrears due from it.
1	2	3	4	5	6	7	8	9
		Rs. a. p.				Rs. a. p.	Rs. a. p.	Rs. a. p.
2070	Pargana Mandalghat, mahal Ramjangal.	10,255 3 6	..	Separate Account No. 0—2 as. 5 gds. share of mauzas Barumbill, Gujrat, Brindabanpur, Buxachak Kist, Gujratghat, Magura Kalagachi-Jalkar, Ghalachak, Hatpota, Chitra, Dumarah, Dariala, Gopalpur, Ghanashyamjote and Kalagechiadihi. All other shares than those specified will be excluded from the sale.	Monoharlal Sil ..	2,708 9 0	..	354 9 0
2051	Pargana Protapvan, mahal Kotebar.	6,229 9 9	..	Residuary Account— 2 annas share of mauzas Gokulpur and Purulda. 15 gandas share of mauzas Khorol, Kotebar, Lochhubar and Kanpore 2 annas share of mauza Alua. 2 annas share of mauza Chakreza. 15 gandas share of mauza Raghunathpur. 2 annas share of mauza Purusattampur. 15 gandas share of mauza Patashpur. 2 annas share of mauza Krishnapur. 3 as. 5 gds. share of mauza Kharan. 15 gandas share of mauza Chak Kalika. 15 gandas share of mauza Kekai. 5 as. 15 gds. share of mauza Kainara. 15 gandas share of mauza Chakfarid. All other shares than those specified will be excluded from the sale.	Chowdhury Padmalochan Roy Mohapatra and others.	533 1 5	..	111 9 0
2105	Pargana Sabong, mahal Bahabalpur.	2,697 3 0	..	Residuary Account— 11 as. 18 gds. share of mauza Harma. 2 as. 8 gds 3 k. share of mauza Bahabalpur. 8 annas share of mauzas Padima, Pindrul, Dangaksha and Panpara. 16 annas share of mauza Chhoto Khelna. 3 as. 8 gds 3 k. share of mauza Jhaparara. All other shares than those specified will be excluded from the sale.	Upendranath Maity and others.	517 0 10	..	235 4 9
2476	Pargana Shahpur, mahal Papanharicharan *alias* Papan.	531 10 6	Entire	....	Benoy Krishna Pal.	..	247 1 7	..
2876	Pargana Potashpur, mahal Dehat Gokulpur.	35,739 0 0	Do ..	....	Satyendra Nandan Das Mohapatra and others.	..	5,758 14 10	..

* *N.B.*—All the estates except tauzi Nos. 548(E), 953 (E), 1039(E), 2051 (R.A.), 2105 (R.A.), 2476(E) are being advertised for sale for arrears of revenue which were due on or before the 31st Jaistha, 1343 B.S., and of which the latest date of payment was 29th June 1936.

The estates bearing tauzi Nos. 548(E), 953(E), 1039(E), 2105(R A.), 2476(E) are being advertised for sale for arrears of revenue which were due on or before 29th Falgoon, 1342 B. S. and 31st Jaistha, 1343 B.S., and of which the latest dates of payment were 28th March 1936 and 29th June 1936.

The estate No. 2051 (R.A.) is being advertised for arrears of revenue which were due on or before 32nd Jaistha, 31st Bhadra, 30th Agrahayan and 30th Falgoon, 1341 B.S., 32nd Jaistha, 31st Bhadra, 30th Agrahayan and 29th Falgoon, 1342 B S., and 31st Jaistha, 1343 B. S., and of which the latest dates of payment were 28th June 1934, 28th September 1934, 12th January 1935, 28th March 1935, 28th June 1935, 28th September 1935, 13th January 1936, 28th March 1936, and 29th June 1936.

Midnapore, the 20th August 1936.

B. BAGCHI, *for* Collector.

Notification B.

NOTICE is hereby given under sections 5 and 13, Act XI of 1859, that unless the arrears or demands, which were due on or before 30th Falgoon, 1341 B.S., 32nd Jaistha, 31st Bhadra and 29th Falgoon, 1342 B.S. and 31st Jaistha, 1343 B.S., and of which the latest dates of payment were 28th March 1935, 28th June 1935, 28th September 1935, 28th March 1936, and 29th June 1936 and which will be due on or before 31st Bhadra, 1343 B.S., and of which the latest date of payment will be 28th September 1936, mentioned below are paid on or before the next latest date of payment, viz., the 28th September 1936, the under-mentioned estates or shares of estates in the district of Midnapore will be notified for sale under sections 6 and 13 of Act XI of 1859 :—

Tauzi No.	Name of mahal and pargana.	Sadar jama of whole estate.	Whether the whole estate is to be sold.	If only a share is to be sold, specification of such share or shares.	Names of proprietors of property to be sold.	If only a share is to be sold, the sadar jama of such share.	If the whole estate is to be sold, the arrears due from it.	If only a share is to be sold, the arrears due from it.	Nature and amount of demand for which to be sold.
1	2	3	4	5	6	7	8	9	10
		Rs. a. p.				Rs. a. p.	Rs a. p.	Rs. a. p.	Rs. a. p.
1985	Pargana Midnapore, mahal Nankar Ballavpore.	9,055 5 9	Entire	....	Bejoy Krishna Ray and others.	..	3,083 3 7 for March 1935 to September 1935 and March and June, 1936.	..	L. R.— 3,663 3 7 Cess— 3,509 14 6 September 1936— L. R.— 708 8 3 Cess— 1,043 10 6

Midnapore, the 29th August 1936.

B. BAGCHI, *for* Collector.

Notification of Sale.

NOTICE is hereby given, under section 6 read with Act VII (B.C.) of 1868, that the undermentioned Khas Mahal tenures in the district of Noakhali will be put up for sale under section 24 as the balances of the purchase money of previous sales were not made good within the time prescribed by law at the office of the Collector of the district on the 24th September 1936, for arrears of revenue (and other demands which by law are realisable as arrears of Land Revenue).

The tenure under lot No. 213 was previously sold for the arrears of revenue which were due on or before the 30th Agrahayan, 1342 B.S., of which the latest date of payment was 13th January 1936, and the tenure under Lot No. 222 for the arrears which were due on or before the 29th Falgoon, 1342 B.S., of which the latest date of payment was 28th March 1936.

Tauzi No.	Name of mahal and pargana.	Sadar jama of the whole estate.	Whether the whole estate is to be sold.	If only a share is to be sold, specification of such share or shares.	Names of proprietors of property to be sold.	If only a share is to be sold, the sadar jama of such share.	If the whole estate is to be sold, the arrears due from it.	If only a share is to be sold, the arrears due from it.
1	2	3	4	5	6	7	8	9
		Rs. a. p.				Rs. a. p.	Rs. a. p	Rs. a. p.
Lot No 213 tauzi No. 1686.	Char Alexander, tenure No. 416, pargana Zazirah.	1,508 4 0	Whole	..	Serajal Haque ..	.	Rent— 1,085 0 9 Cess— 874 9 0	
Lot No. 222, tauzi No. 1942.	Char Falcon, tenure No 192, pargana Zazirah	1,089 1 0	Do ..	. .	Nawab Ali Choudhury.	..	Rent— 810 13 0 Cess— 79 2 8	

Noakhali, the 2nd September 1936.

[ILLEGIBLE], *for* Collector.

Notification of Sale.

NOTICE is hereby given, under sections 6 and 13 of Act XI of 1859, read with Act VII (B.C.) of 1868, that the under-mentioned estates and shares of estates and Khas Mahal tenures in the district of Noakhali will be put up for sale at the office of the Collector of the district on the 24th September 1936, at 12 noon, for arrears of revenue (and other demands which by law are realisable as arrears of land revenue).

When in columns 5, 7 and 9 of the following statement it is stated that only a share is to be sold, it is to be understood that a separate account is kept for that share :—

Tauzi No.	Name of mahal and pargana.	Sadar jama of the whole estate.	Whether the whole estate is to be sold.	If only a share is to be sold, specification of such share or shares.	Names of proprietors of property to be sold.	If only a share is to be sold, the sadar jama of such share.	If the whole estate is to be sold, the arrears due from it.	If only a share is to be sold, the arrears due from it.
1	2	3	4	5	6	7	8	9
		Rs. a. p.		**Estate.**		Rs. a. p.	Rs. a. p.	Rs. a. p.
Lot No. 2, tauzi No. 18.	Char Afzal Fakira and Char Lakshmi, pargana Sandwip.	2,847 12 8	Whole	....	Raicha Khatun and others.	..	L. R.— 8,020 11 5 Cess— 4,812 8 3	
Lot No. 13, tauzi No. 194.	Char Hudrakhali Mudafat Hoshen Ghat Majhi, pargana Sandwip.	1,994 0 0	Share	Residuary share hishya 5 as. 6 gds. 2 cr. 2 kt. All other shares than that specified will be excluded from sale.	Sheikh Jafor Ahamed Choudhuri and others.	664 10 4	..	L. R.— 21 5 6 Cess— 141 10 0
Lot No. 15, tauzi No. 200.	Char Ramiz, pargana Sandwip.	2,287 0 0	Whole	....	Babu Madhab Ch. Bhowmik, Revenue agent, receiver to the Wakf Estate of late Moazzam Hossen Choudhury.	..	L. R.— 72 0 0 Cess— 1,257 0 6	
Lot No. 16, tauzi No. 208.	Sukchar, pargana Zazirah.	2,094 0 0	Do. ..	....	Manabborennessa Choudhurani and others.	..	L. R.— 572 7 9 Cess— 183 8 0	
Lot No. 20, tauzi No. 1574.	Char Thak Hudrakhali, pargana Sandwip.	3,516 0 0	Do. ..	....	Sheikh Ahmed Sobhan Choudhury.	..	L. R.— 518 0 0	
Lot No. 21, tauzi No. 1577.	Thak Char Sekandar, pargana Zazirah.	1,014 0 0	Do. ..	....	Babu Madhab Chandra Bhowmik, receiver to the estate of Moazzam Hoshen Choudhury and others.		L. R.— 159 7 3	..
				Khas Mahal Tenures.				
Lot No. 88, tauzi No. 1662.	Char Kuchiamora, tenure No. 2, pargana Sandwip.	756 14 0	Whole	....	Golam Khaleq ..	..	L. R.— 378 7 0 Cess— 31 12 6	..
Lot No. 211, tauzi No. 1686.	Char Sekandar, tenure No. 2, pargana Zazirah.	714 5 0	Do.	...	Sachindralal Das	..	L. R.— 22 5 0 Cess— 8 15 9	..

These estates and shares of estates and Khas Mahal tenures are being advertised for sale for the instalments of revenue which were due on or before the 31st Jaistha, 1343 B.S. of which the latest date of payment was the 29th June, 1936.

Noakhali, the 2nd September 1936. [ILLEGIBLE], *for* Collector.

THE COMMISSIONERS FOR THE PORT OF CALCUTTA.

Notice of Sale under Sections 118 and 119 of the Calcutta Port Act III of 1890 (B.C.)

NOTICE is hereby given that the liability of the Commissioners for the undermentioned goods consigned to order ex. the undermentioned vessels has in terms of section 113 of the abovementioned Act ceased on the expiration of three clear days from the date of landing. These goods accordingly remain on the Port Commissioners' premises at the sole risk and expense of the owners and if not cleared on or before the 5th October 1936 on payment of all charges due will be sold by public auction :—

Steamer's name.	Date of landing.	Marks and numbers.	Quantity.	Description.
	1936.			
Yuensang ..	2nd January .	T in a circle, Cal., 2723 ..	1	Empty drum.
Hosang	11th April ..	No mark	1	Bale matting.
Celebes Maru ..	10th June ..	H. P. M.	1	Empty drum.
Do. ..	Do. ..	Three stroke in a diamond, 2029 on top, M B K below.	1	Coil wire.
Do. ..	17th June ..	No mark	1	Empty tin.
Truenfels ..	15th June ..	A D O S, 4097	1	Case filter.
Talma ..	25th June ..	S P in a diamond, 3439/58 ..	20	Bundles chest wood.
Clan Skene ..	12th February ..	B B *or* B B N, 3	1	Bag nails.
Tottori Maru ..	7th May ..	No mark	3	Bags merchandise.
Ramelor ..	27th May ..	L. B., 7491 ..	1	Case advertising matters.
Penang Maru ..	8th June ..	No mark	1	Coil wire.
Sirdhana ..	9th July ..	S upon Maskati in a diamond, 900	1	Case sample glassware.
Japan ..	23rd July ..	L C, 1, 2, 4, 5, 9, 12/15, 17, 20, 25, 26, 28.	14	Cases wooden bobbins.
Islami ..	17th July ..	T S in a diamond, 23, 2 on top, 190 below.	4	Bags merchandise.
Do. ..	Do. ..	No mark		A quantity of loose betel-nuts weighing about 2 qrs.
Yuensang ..	14th May ..	T S in a diamond, 2115 below, 14	1	Case merchandise.
Sirdhana ..	4th May ..	K S in a diamond, R W on top, C. O. below, 70.	1	Case sample of gramophone.
Hague Maru ..	13th May ..	No mark	1	Empty tin.
Kutsang ..	29th May ..	Do.	2	Pieces secondhand motor tyres.
Do. ..	30th May ..	Do.	1	Case merchandise.
Santhia ..	15th June ..	A R W, 277	1	Case grey cotton cloth.
Toba Maru ..	29th July ..	J D in a diamond, 1 .	1	Case sample of bottles and tumblers, etc.
Do. ..	30th July ..	No mark	4	Cut. pieces printed art silk cloth.
Do. ..	Do. ..	Do.	1	Cut. piece cotton cloth.
	1935.			
Cortellazzo ..	11th May	No mark	6	Bags sulphur sweepings.

Steamer's name.	Date of landing.	Marks and numbers.	Quantity.	Description.
	1936.			
Garbeta ..	27th June ..	M H G	1	Bundle coir yarn.
Chaksang ..	26th June ..	The Cotton Agents Ltd.	1	Package sample sulphur.
Do. ..	27th June ..	No Mark	18	Packets combs.
Himalaya Maru ..	23rd July ..	90 in a diamond, 90 on top ..	3	Bundle Momi chest.
Do. ..	24th July ..	A A in a diamond	1	Bundle shooks.
Matra ..	7th May ..	C M H in a diamond, S A below; 1576/77.	2	Cases medicinal oil.
Havana Maru ..	27th June ..	Calcutta, 81	1	Case merchandise.
Do. ..	30th June ..	Sakura Cherry	1	Bundle empty paper bags.
Kumsang ..	27th April ..	No Mark	1	Coil wire.
Do. ..	Do. ..	Do.	1	Package sulphur.
Do. ..	Do. ..	K in a circle within a triangle, 0078 below, 1272.	1	Bag merchandise.
Do. ..	Do. ..	S P in a diamond	1	Bundle planks.
Toku Shima Maru	21st May ..	No. 1 in a diamond, B A on top, C W below, 3567.	1	Case procelainware.
Wachtfels ..	13th May ..	E B	2	Cases petrol and kerosene samples.
Do. ..	Do. ..	R O C	4	Cases petrol and kerosene samples.
Tiradentes ..	30th May ..	M W, 8720	1	Case machinery parts.
Hosang ..	12th June ..	N B in a diamond, 599	1	Package crucible.
Masula ..	18th June ..	C M H, 1/4	4	Cases crown corks.
Do. ..	15th June ..	M R C P R O M O S Super Fatting Agent.	1	Case vegetable fat.
Lichtenfels ..	27th June ..	1251 in a triangle, Beluchia, 24062 below, 1/2.	2	Cases buttons.
Clan Macnab ..	15th July ..	Angus G K N	1	Bundle coil hoop.
	1935.			
Celebes Maru ..	11th December ..	No Mark	2	Bags cement.
Do. ..	Do. ..	Do.	1	Coil wire.
	1936.			
Incomati ..	8th May ..	No Mark	1	Bag soda ash.
Karoa ..	12th May ..	Do.	3	Bags rice.
Do. ..	Do. ..	Do.	1	Bag atta.
Clan Macnab ..	27th March ..	No Mark	1	Bag rivets.
Hatimura ..	4th May ..	W. C.	13	Bags wheat.
Clan Maciver ..	8th May ..	No Mark	1	Piece round bar.
Clan Macphee ..	23rd May ..	Ditto	1	Piece sanitary pan.
Clan Macindoe ..	20th June ..	G. S. C. & Co., 162/72	11	Packages provisions.
Clan Mackellar ..	5th June ..	Joy in a circle, 87, 91, 146 ..	3	Empty kegs.
Silver Maple ..	25th June ..	No Mark	1	Bag merchandise.
Do. ..	Do. ..	Do.	1	Crate machinery.
Gurna ..	17th March ..	Water	1	Bag wheat.
Cedar Bank ..	24th June ..	M R P & Co., 10295/384	90	Packages Bristol's Sarsaparilla.

Steamer's name.	Date of landing.	Marks and numbers.	Quantity.	Description.
	1936.			
Steelage ..	28th July ..	The Salvation Army District Headquarters, Bongaon, E. B. Ry., Bengal.	1	Case used Christmas cards for missionary use.
Mashobra ..	29th May ..	A B R A C upon 4957A in a diamond, G M on top, H below, 455.	1	Case essence.
Do. ..	4th June ..	D. B. 26386	1	Parcel bicycle saddle sample.
Do. ..	29th May ..	Sethia & Sons	1	Package saddle sample.
Do. ..	4th June ..	R. H. C. T. A.	2	Bags dried fruits.
Modasa ..	4th May ..	N W S in a diamond, 1/2 ..	2	Drums oil.
Dumana ..	19th May ..	C M H, 1465/69	5	Cases oil.
Mulbera ..	30th June ..	1350 in a diamond, L S on top, 33/38	6	Bales paper.
Do. ..	29th June ..	54 upon C M H in a triangle, 1309 ..	1	Case chemicals.
Do. ..	8th July ..	No Mark	..	A quantity of loose chalk weighing about 10 cwts.
Gierfels ..	17th July ..	S. S. & Co., 7561	1	Case hosiery.
Saparoea ..	27th March ..	L. M. J. Hamb, 8, Esplanade East ..	1	Package tapioca flour sample.
Pandit ..	22nd May ..	R. P. Singh, Chandernagore *via* Calcutta.	7	Cases matches.
Mulbera ..	7th March ..	U. C. Shaw	1	Case sample wine.
		Unclaimed goods of I. V. Wharves.		
		Kalika Ranjan Mitter	1	Package merchandise.

NOTICE is hereby given that the undermentioned goods landed from the undermentioned vessels and now lying in Port Commissioners' Clive Warehouse, Calcutta Jetties, on which Port Commissioners' charges have not been paid, will be sold by public auction if they are not cleared on or before the 5th October 1936 on payment of all Port Commissioners' charges due thereon :—

Steamer's name.	Date of landing.	Marks and numbers.	Quantity.	Description.
	1934.			
Bengal Maru ..	22nd January ..	N upon 525 in a diamond, R B on top, M C below, 21/40.	20	Cases porcelainware.
Do. ..	Do. ..	N upon 526 in a diamond, R B on top, M C below, 19/28, 32/36.	15	Ditto.
Do. ..	19th January ..	1621 in a diamond, R B on top, M C below, 2884/93, 2914/23.	20	Ditto.
Do. ..	Do. ..	1623 in a diamond, R B on top, M C below, 2954/58, 2966/68, 2989/98.	18	Ditto.
Do. ..	22nd January ..	1622 in a diamond, R B on top, M C below, 2758/64, 2810/19.	17	Ditto.
Do. ..	Do. ..	Robin in a block, Dutt below, 2586/602.	17	Ditto.
Do. ..	Do. ..	Robin in a block, Dutt below, 2571/80, 2633/42, 2672/77, 2693/97, 2713/17.	36	Ditto.

Calcutta, the 10th September 1936.

W. A. BURNS,
Traffic Manager,
Port Commissioners.

(1862—1)

In the Court of the Sub-Judge at Rajshahi.

RENT EXECUTION CASE No. 33 OF 1935.

Kedar Nath Bagchi, decree-holder,

versus

Bhupendra Narayan Adhikary and others, judgment-debtors.

IT is hereby advertised that the interest of the judgment-debtors 1 to 4 in the above case in tauzi No. 2109 of the Rajshahi Collectorate, mahals Haludghar and others, bearing an annual revenue of Rs. 1,194-15as., within pargana Tegachi, i.e., 16 annas of the said estate comprising mauzas Aujkuri, Boalia, Koalipara, Perulisenpara and Tegachi Senpara in police-station Bagmara and mauza Nakail in police-station Tanor and mauzas Tektapara and others in police-station Paba will be sold along with other properties at public auction at 12 noon on 15th September 1936 at Court sale to be held by the Nazir of the Court in the sale room for the realization of the decree-holder's dues amounting to Rs. 1,339-12-3 pies.

The value of the property being estimated at Rs. 3,500.

B. C. CHAKRABORTY, Sub-Judge.

Rajshahi, the 28th August 1936. (1825—1)

In the Court of the Sub-Judge at Birbhum.

RENT EXECUTION CASE No. 14 OF 1936.

Rai Bahadur Nalinakshya Dutt, decree-holder,

versus

Haridas Mukherjee and others, judgment-debtors.

Claim—Rs. 11,165-2-3p.

Date of sale—1st October 1936 at 12 noon.

Value given by the decree-holder—Rs. 2,000.

THE following properties have been ordered to be sold in the abovementioned Rent Execution Case:—

Entire sixteen annas zamindari interest of judgment-debtor No. 7 Jonoranjan Rai in lot Bhurkunda with all its mauzas Chak-basat, Dorbust hak hakuk bearing tauzi No. 162 of the Birbhum Collectorate, the annual revenue of which payable in the Birbhum Collectorate is Rs. 3,717-11-3 pies only. The mauzas being:—

Name of mauza.	J. L. No.	Khatian No.
Thana Suri.		
Adda	90	185
Gojalpur	92	1
Agur	126	22
Barhat	127	15
Bhurkuna	228	39
Kachujore	130	269
Bongaun	131	3
Lakhandihi	132	30
Saralpur	133	1
Meherpur	140	5
Thana Dubrajpur.		
Bonkati	81	2
Sadaipur	93	2
Muthabera	94	14
Bujrukpur	95	15
Perijpur	177	49
Jharia Muhamedapur ...	178	5
Bisalpur	180	1
Kolda	181	20
Teliadanga	183	1
Madarhati	184	1
Chandidaspur	198	169

D. C. SEN, Sub-Judge.

Suri, the 3rd September 1936.

(1829—1)

In the High Court of Judicature at Fort William in Bengal, in Insolvency.

NOTICE OF ADJUDICATION ORDER.

No. 106 of 1936.

Re Miss Irene May Pereira, residing at No. 50, Wellesley Street, in the town of Calcutta, employed as a Lady Doctor by the Kesoram Cotton Mills, Ltd., of 42, Garden Reach Road, Kidderpore, Calcutta, ex parte the debtor in person.

ON the 10th day of August 1936 an order was made by the High Court of Judicature at Fort William in Bengal in its insolvency jurisdiction adjudging the abovenamed as an insolvent.

Note.—All debts due to the estate should be paid to me.

Dated this 4th day of September 1936.

G. M. FALKNER, Official Assignee.

In the High Court of Judicature at Fort William in Bengal, in Insolvency.

NOTICE OF ADJUDICATION ORDER.

No. 120 of 1936.

Re Sree Lal Shah, residing at No. 80/1, Grey Street, in the town of Calcutta, formerly living on the income of the lease-hold house at No. 80/2, Cornwallis Street, in Calcutta aforesaid, at present of no occupation, ex-parte the debtor in person.

ON the 27th day of August 1936 an order was made by the High Court of Judicature at Fort William in Bengal in its insolvency jurisdiction adjudging the abovenamed as an insolvent.

Note.—All debts due to the estate should be paid to me.

Dated this 31st day of August 1936.

G. M. FALKNER, Official Assignee.

In the High Court of Judicature at Fort William in Bengal, in Insolvency.

NOTICE OF ADJUDICATION ORDER.

No. 122 of 1936.

Re Gurmukhrai Agarwalla, Rameswar Agarwalla and Ramgopal Agarwalla, residing at No. 3, Cotton Street, Calcutta, lately carrying on business jointly as Commission Agents and dealers in jute at No. 43, Cotton Street, Calcutta, under the name and style of Gurmukhrai Ramgopal, at present working for gain as brokers in Calcutta aforesaid, ex parte the debtors.

N. C. Basu, debtors' solicitor.

ON the 27th day of August 1936 an order was made by the High Court of Judicature at Fort William in Bengal in its insolvency jurisdiction adjudging the abovenamed as insolvents.

Note.—All debts due to the estate should be paid to me.

Dated this 31st day of August 1936.

G. M. FALKNER, Official Assignee.

In the High Court of Judicature at Fort William in Bengal, in Insolvency.

NOTICE OF ADJUDICATION ORDER.

No. 125 of 1936.

Re Ramratan Purohit, residing at No. 14/2, Sovaram Bysack Street, in the town of Calcutta, and lately working as an embroiderer at the aforesaid address, at present out of employment, ex parte the debtor in person.

ON the 29th day of August 1936 an order was made by the High Court of Judicature at Fort William in Bengal in its insolvency jurisdiction adjudging the abovenamed as an insolvent.

Note.—All debts due to the estate should be paid to me.

Dated this 2nd day of September 1936.

G. M. FALKNER, Official Assignee.

In the High Court of Judicature at Fort William in Bengal, in Insolvency.

NOTICE OF ADJUDICATION ORDER.

No. 126 OF 1936.

Re Joseph Bartle Roach, residing at No. 2, Hartford Lane, in the town of Calcutta, and working as an assistant in the employ of Messrs. French Motor Car Company, Limited, at No. 234/3, Lower Circular Road, in the suburbs of Calcutta, ex parte the debtor.

B. P. Bhattacharyya, debtor's solicitor.

ON the 2nd day of September 1936 an order was made by the High Court of Judicature at Fort William in Bengal in its insolvency jurisdiction adjudging the abovenamed as an insolvent.

Note.—All debts due to the estate should be paid to me.

Dated this 5th day of September 1936.

G. M. FALKNER, Official Assignee.

In the Court of the District Judge at Bogra.

INSOLVENCY CASE No. 6 OF 1936.

NOTICE is hereby given that the debtor Abdur Rahaman Paiker, son of late Fyez Mahammad Paiker, resident of Phulbari, Police-station Kotwali, district Bogra, was adjudged insolvent on 20th August 1936 by an order of this Court, and he was directed to apply for discharge within a year.

S. C. MUKHERJI, Ex-officio Registrar.

Bogra, the 5th September 1936. (1873—1)

In the Court of the District Judge of Burdwan.

INSOLVENCY CASE No. 25 OF 1936.

TAKE notice that Nrisinha Prosad Kar, son of late Lal Behari Kar, of Mashdanga, police-station Manteswar, district Burdwan, sole proprietor of the firm named K. K. Kar and Company, situated at 70, Clive Street, Calcutta, since abolished, has applied for being adjudged an insolvent, and that the 5th day of October 1936 has been fixed for hearing of the application.

M. H. B. LETHBRIDGE, District Judge.

Burdwan, the 3rd September 1936. (1841—1)

NOTICE TO CREDITORS OF THE DATE OF HEARING OF AN INSOLVENCY PETITION.

Section 19 of the Provincial Insolvency Act, V of 1920.

In the Court of the District Judge at Chittagong.

INSOLVENCY APPLICATION No. 30 OF 1936.

WHEREAS creditor Kamini Kumar Das, son of late Dhaniram Das, of village Noapara, police-station Raozan, district Chittagong, has applied to this Court by a petition, dated 21st day of August 1936, to have (1) Satis Chandra Das and (2) Prasanna Kumar Das, sons of late Uma Charan Das, of village Noapara, police-station Raozan, district Chittagong, debtors, declared insolvents under the Provincial Insolvency Act, V of 1920, this is to give notice that the Court has fixed the 26th day of September 1936 for the hearing of the aforesaid petition and the examination of the petitioning creditor.

H. G. WAIGHT, District Judge.

Chittagong, the 1st September 1936. (1867—1)

ORDER ANNULLING ADJUDICATION.

Section 43 of the Provincial Insolvency Act, V of 1920.

In the Court of the District Judge at Chittagong.

INSOLVENCY APPLICATION No. 21 OF 1935.

Azizar Rahaman, son of Jibon Ali, of Sadaha, police-station Satkania, district Chittagong, debtor-applicant.

INSOLVENT Azizar Rahaman of Sadaha, police-station Satkania, having not applied for his discharge, and on reading the Receiver's report, it is ordered that the order of adjudication, dated 31st October 1935, against the said Azizar Rahaman of Sadaha, police-station Satkania, be and the same is hereby annulled.

Dated this 31st day of August 1936.

H. G. WAIGHT, District Judge. (1874—1)

ORDER OF ADJUDICATION.

Section 27 of the Provincial Insolvency Act, V of 1920.

In the Court of the District Judge at Chittagong.

INSOLVENCY APPLICATION No. 18 OF 1936.

PURSUANT to a petition, dated 23rd May 1936, by the debtor, Siddique Ahamed, son of Mobrak Ali, of Pataknagar, police-station Fatickchery, post office Fatickchery, district Chittagong, and on the application of the debtor himself and on reading his application and hearing his pleader, it is ordered that the debtor be and the said debtor is hereby adjudged insolvent.

It is further ordered that the debtor do apply for his discharge on or before 1st March 1937. The petition will be heard on 1st April 1937. The Nazir is appointed Receiver.

Dated this 29th day of August 1936.

H. G. WAIGHT, District Judge. (1875—1)

In the Court of the District Judge of Dacca.

INSOLVENCY CASE No. 10 OF 1936.

(1) Benode Lal Pal, (2) Brojolal Pal and (3) Protap Lal Pal, sons of late Ramkanai Pal, (4) Rasik Lal Pal and (5) Jyotilal Pal, sons of late Boloram Pal, (6) Amritalal Pal, (7) Gourpada Pal, (8) Kalipada Pal and (9) minor Tarapada Pal, sons of late Hiralal Pal, by his eldest brother Amritalal Pal, constituting partners of a registered firm in the name and style of Tokani Prasad Pal, situate at Gopalnagar, police-station Munshiganj, district Dacca, petitioners

versus

(1) Haran Chandra Rakshit, (2) Lal Mohan Rakshit and (3) Lalit Mohan Rakshit, sons of late Rajani Kanta Rakshit, (4) Bhupati Mohan Rakshit, son of late Dhananjoy Rakshit, residents of Pauldia, police-station Serajdikhan, district Dacca, (5) sole partners of Firm Haran Chandra Bhupati Mohan Lal Mohan Lalit Mohan Rakshit, with places of business at Mirkadim, police-station Munshiganj, and at Pauldia, police-station Serajdikhan, district Dacca, debtors, opposite party.

WHEREAS the abovenamed petitioning creditors have applied to this Court to adjudge the abovenamed debtors insolvents, the Court has fixed the 23rd September 1936 for the hearing of the aforesaid petition, objection of the debtors and the creditors.

P. BASU, District Judge-in-charge.

Dacca, the 2nd September 1936. (1869—1)

In the Court of the District Judge of Faridpur.

INSOLVENCY CASE No. 93 OF 1936.

(1) Afsu Mia, (2) Lalu Mia and (3) Sabdu Mia, sons of late Gagan Mia, of Agdia, police-station Muksudpur, district Faridpur, debtors-petitioners.

NOTICE is hereby given that the abovenamed debtors-petitioners have applied to this Court for being adjudged insolvents and that the 26th September 1936 has been fixed for the hearing of the application.

K. B. ROY, District Judge.

Faridpur, the 2nd September 1936. (1832—1)

In the Court of the District Judge of Hooghly.

INSOLVENCY PETITION No. 52 OF 1936.

NOTICE is hereby given that Sheikh Abdul Matleb Sarke, son of Sheikh Abdul Karim Sarke, of Cholua, thana Dhaniakhali, district Hooghly, was on the 27th August 1936 adjudged an insolvent. The 27th November 1936 has been fixed for framing a schedule and creditors are required to prove their claims on that day.

[ILLEGIBLE], Addl. District Judge.

Chinsura, the 28th August 1936. (1823—1)

In the Court of the District Judge of Hooghly.

NOTICE is hereby given, under clause (2) of section 12 of the Provincial Insolvency Act, V of 1920, to his creditors that the discharge petition of Nagendra Nath De, son of Raj Kristo De, of Serampur, thana Serampur, district Hooghly, has been filed in this Court in Insolvency No. 49 of 1935, and that the 26th September 1936 has been fixed for the hearing thereof.

[ILLEGIBLE], for District Judge.

Chinsura, the 27th August 1936. (1824—1)

In the Court of the District Judge of Hooghly.

INSOLVENCY PETITION No. 36 OF 1936.

NOTICE is hereby given that Amrita Lal Mullik, son of late Shyama Charan Mullik, of Poranchapu, thana Polba, district Hooghly, was on the 29th day of August 1936 adjudged an insolvent. The 27th day of November 1936 has been fixed for framing a schedule and creditors are required to prove their claims on that day.

[ILLEGIBLE], Addl. District Judge.

Chinsura, the 31st August 1936. (1830—1)

In the Court of the District Judge of Hooghly.

INSOLVENCY PETITION No. 34 OF 1936.

NOTICE is hereby given that Pulin Chandra Khamaru, son of late Bhusan Chandra Khamaru, of Sargoria, thana Pandua, district Hooghly, was on the 31st day of August 1936 adjudged an insolvent. The 27th day of November 1936 has been fixed for framing a schedule and creditors are required to prove their claims on that day.

[ILLEGIBLE], Addl. District Judge.

Chinsura, the 1st September 1936. (1831—1)

In the Court of the District Judge of Jalpaiguri.

INSOLVENCY CASE No. 10 OF 1936.

(1) Prahlad Chand Agarwala, son of late Khem Karan Dass Agarwala, (2) Gonesh Prasad Agarwala, son of late Durga Prasad Agarwala, of Jalpaiguri town, creditor-petitioners,

versus

Mahadeb Agarwala, son of late Ram Dayal Agarwala, of Jalpaiguri town, at present Jalpaiguri Jail, debtor, opposite party.

WHEREAS the abovenamed petitioners have applied to this Court to adjudge the abovenamed debtor insolvent, the 26th day of September 1936 has been fixed for hearing the aforesaid petition.

S. C. GHOSE, Registrar, for District Judge.

Jalpaiguri, the 2nd September 1936. (1842—1)

In the Court of the District Judge of Jalpaiguri.

INSOLVENCY CASE No. 9 OF 1936.

Asitabarani Debi, wife of Ramapada Bhattacharjya, of Jalpaiguri town, creditor-petitioner,

versus

Dinesh Chandra Basu Mazumdar, son of late Hem Chandra Basu Majumdar, of Jalpaiguri, debtor, opposite party.

WHEREAS the abovenamed petitioner has applied to this Court to adjudge the abovenamed debtor insolvent, the 26th day of September 1936 has been fixed for hearing the aforesaid petition.

S. C. GHOSE, Registrar, for District Judge.

Jalpaiguri, the 2nd September 1936. (1843—1)

In the Court of the District Judge of Noakhali.

INSOLVENCY CASE No. 14 OF 1936.

NOTICE is hereby given that Abdul Aziz Miah, son of late Hazi Monsar Ali Patwari, of Chandpur, police-station Feni, district Noakhali, having applied to this Court for being adjudged an insolvent, the 26th day of September 1936 has been set down for hearing of the application.

J. N. SEN, for District Judge.

Noakhali, the 1st September 1936. (1863—1)

In the Court of the District Judge of Noakhali.

INSOLVENCY CASE No. 13 OF 1936.

NOTICE is hereby given that Devendra Kumar Chakladar, son of late Hari Mohan Chakladar, of Sirajpur, police-station Companiganj, district Noakhali, having applied to this Court for being adjudged an insolvent, the 26th day of September 1936 has been set down for hearing of the application.

J. N. SEN, for District Judge.

Noakhali, the 1st September 1936. (1864—1)

ORDER OF ADJUDICATION.

In the Court of the District Judge of Noakhali.

INSOLVENCY CASE No. 8 OF 1936.

PURSUANT to a petition, dated 19th May 1936, filed by the debtor Sarat Chandra De, son of late Ram Nidhi De, of Uttarzilla Nowabpur, known as Chandipur, police-station Feni, in the district of Noakhali, and on the application of the debtor and on hearing the debtor it is ordered that the debtor is hereby adjudged insolvent.

J. N. SEN, for District Judge.

Noakhali, the 31st August 1936. (1865—1)

In the Court of the District Judge of Noakhali.

INSOLVENCY CASE No. 15 OF 1936.

NOTICE is hereby given that (1) Maulvi Faezar Rahman, (2) Naju Mia and (3) Serajal Huq Mia, sons of late Taizuddin Faraji, of Mahammadpur, police-station Senbag, post office Kalyandi, district Noakhali, having applied to this Court for being adjudged insolvent, the 3rd October 1936 has been set down for hearing the application.

J. N. SEN, District Judge.

Noakhali, the 4th September 1936. (1876—1)

In the Court of the District Judge of Pabna-Bogra.

INSOLVENCY CASE No. 5 OF 1935

NOTICE is hereby given that insolvent Haridas Saha, son of late Srikantha Nath Saha, of Pabna Raghabpur, police-station and district Pabna, has applied for his final discharge, and the 23rd September 1936 has been set down for hearing of the application.

S. N. MODAK, District Judge.

Pabna, the 2nd September 1936. (1866—1)

NOTICE TO CREDITORS OF APPLICATION FOR DISCHARGE.

Section 41(1) of the Provincial Insolvency Act, V of 1920.

In the Court of the District Judge at Alipore.

INSOLVENCY CASE No. 54 OF 1933.

P. G. Datar of B. N. Railway House, Garden Reach, 24-Parganas, applicant.

TAKE notice that the abovenamed insolvent has applied at the Court for his discharge, and that the Court has fixed the 5th day of October 1936 at 11 o'clock for hearing the application.

Dated this 2nd day of September 1936.

T. H. ELLIS, District Judge.

(1838—1)

ORDER OF ADJUDICATION.

Section 27 of the Provincial Insolvency Act, V of 1920.

In the Court of the District Judge at Alipore.

INSOLVENCY APPLICATION No. 17 OF 1936.

PURSUANT to a petition, dated 11th May 1936, filed by Aniruddha Mitra of 155, Lower Circular Road, police-station Entally, 24-Parganas, debtor, and on the application of the debtor himself and on reading his application and hearing his pleader, it is ordered that the debtor be and the said debtor is hereby adjudged insolvent.

It is further ordered that the debtor do apply for his discharge on 20th December 1937.

Dated this 24th day of August 1936.

T. H. ELLIS, District Judge.

(1839—1)

ORDER OF ADJUDICATION.

Section 27 of the Provincial Insolvency Act, V of 1920.

In the Court of the District Judge at Alipore.

INSOLVENCY APPLICATION No. 41 OF 1934.

PURSUANT to a petition, dated 6th October 1934, filed against Muradan Sardar of Bhatpara, police-station Jagatdal, 24-Parganas, debtor, and on the application of the Secretary of State for India in Council, creditor, and on reading their application and hearing their pleader, it is ordered that the debtor be and the said debtor is hereby adjudged insolvent.

It is further ordered that the debtor do apply for his discharge on 23rd August 1937.

Dated this 25th day of August 1936.

T. H. ELLIS, District Judge.

(1840—1)

In the Court of the District Judge of 24-Parganas.

INSOLVENCY CASE No. 30 OF 1936.

Chandi Charan Nayek, a firm carrying on business at 124/1, Bowbazar Street, Calcutta, creditor-applicant.

To (1) Tarini Prasad Dhar, (2) Suresh Kumar Dhar, (3) Bijoy Kumar Dhar, (4) Badal Chandra Mukherjee of Friend & Co. at P.33, Ekdalia Road, Ballygunge, 24-Parganas, debtors.

ON the 2nd day of September 1936 it was ordered that the matter of the petition of the applicant be heard on the 5th day of October 1936, and that the said applicant do attend to be examined by this Court on that date.

T. H. ELLIS, District Judge.

Alipore, the 3rd September 1936.

(1868—1)

ORDER OF ADJUDICATION.

Section 27 of the Provincial Insolvency Act, V of 1920.

In the 4th Court of the Sub-Judge at Alipore.

INSOLVENCY APPLICATION No. 109 OF 1936.

PURSUANT to a petition, dated 7th March 1936, filed by Raghubir Kahar of 24, Joynarain Tarkapanchanon Lane, Beliaghata, 24-Parganas, debtor, and on the application of the debtor himself and on reading his application and hearing his pleader, it is ordered that the debtor be and the said debtor is hereby adjudged insolvent.

It is further ordered that the debtor do apply for his discharge within 24th February 1937.

Dated this 24th day of August 1936.

[ILLEGIBLE], Sub-Judge.

(1833—1)

ORDER OF ADJUDICATION.

Section 27 of the Provincial Insolvency Act, V of 1920.

In the 4th Court of the Sub-Judge at Alipore.

INSOLVENCY APPLICATION No. 183 OF 1936.

PURSUANT to a petition, dated 21st April 1936, filed by Mrs. Saibolini Phookan of 4, Sura 3rd Lane, police-station Beliaghata, 24-Parganas, debtor, and on the application of the debtor herself and on reading her application and hearing her pleader, it is ordered that the debtor be and the said debtor is hereby adjudged insolvent.

It is further ordered that the debtor do apply for her discharge within 24th February 1937.

Dated this 24th day of August 1936.

[ILLEGIBLE], Sub-Judge.

(1834—1)

ORDER OF ADJUDICATION.

Section 27 of the Provincial Insolvency Act, V of 1920.

In the 4th Court of the Sub-Judge at Alipore.

INSOLVENCY APPLICATION No. 213 OF 1936.

PURSUANT to a petition, dated 5th May, 1936, filed by Khagendranath Dewan of 20, Fallbagan Road, police-station Entally, 24-Parganas, debtor, and on the application of the debtor himself and on reading his application and hearing his pleader, it is ordered that the debtor be and the said debtor is hereby adjudged insolvent.

It is further ordered that the debtor do apply for his discharge within 24th February 1937.

Dated this 24th day of August 1936.

[ILLEGIBLE], Sub-Judge.

(1835—1)

ORDER OF ADJUDICATION.

Section 27 of the Provincial Insolvency Act, V of 1920.

In the 4th Court of the Sub-Judge at Alipore.

INSOLVENCY APPLICATION No. 300 OF 1936.

PURSUANT to a petition, dated 20th June 1936, filed by Sk. Majher Ali of 22, Austember, Kidderpore, 24-Parganas, debtor, and on the application of the debtor himself and on reading his application and hearing his pleader, it is ordered that the debtor be and the said debtor is hereby adjudged insolvent.

It is further ordered that the debtor do apply for his discharge within 24th February 1937.

Dated this 24th day of August 1936.

[ILLEGIBLE], Sub-Judge.

(1836—1)

ORDER OF ADJUDICATION.

Section 27 of the Provincial Insolvency Act, V of 1920.

In the 4th Court of the Sub-Judge at Alipore.

INSOLVENCY APPLICATION No. 307 OF 1936.

PURSUANT to a petition, dated 27th June 1936, filed by Jawala Prosad alias Jwala Dutta of Halshibagan, police-station Manicktola, 24-Parganas, debtor, and on the application of the debtor himself and on reading his application and hearing his pleader, it is ordered that the debtor be and the said debtor is hereby adjudged insolvent.

It is further ordered that the debtor do apply for his discharge within 24th February 1937.

Dated this 24th day of August 1936.

[ILLEGIBLE], Sub-Judge.

(1837—1)

In the 4th Court of the Sub-Judge of 24-Parganas.

INSOLVENCY CASE No. 359 OF 1936.

Niranjan Lal of 132/2, Russa Road, Kalighat, 24-Parganas, applicant.

To Ram Das Gobordhan Das of 20, Darmahatta, Calcutta, and others, creditors.

ON the 28th day of August 1936 it was ordered that the matter of the petition of the applicant be heard on the 12th day of October 1936, and that the said applicant do attend to be examined by this Court on that date.

[ILLEGIBLE], Sub-Judge.

Alipore, the 31st August 1936. (1844—1)

In the 4th Court of the Sub-Judge of 24-Parganas.

INSOLVENCY CASE No. 366 OF 1936.

Noor Mohammed of Kamarhati, police-station Baranagore, 24-Parganas, applicant.

To The Secretary of State for India in Council and others, creditors.

ON the 26th day of August 1936 it was ordered that the matter of the petition of the applicant be heard on the 5th day of October 1936, and that the said applicant do attend to be examined by this Court on that date.

[ILLEGIBLE], Sub-Judge.

Alipore, the 27th August 1936. (1845—1)

In the 4th Court of the Sub-Judge of 24-Parganas.

INSOLVENCY CASE No. 370 OF 1936.

(1) Ramabhtar Marwari, (2) Bansidhar Marwari, and (3) Parameswar Doyal Marwari of 132/2, Russa Road, police-station Tollygunge, 24-Parganas, applicants.

To Sm. Pan Bai of 21, Panchagullee, Burrabazar, Calcutta, and others, creditors.

ON the 28th day of August 1936 it was ordered that the matter of the petition of the applicant be heard on the 12th day of October 1936, and that the said applicant do attend to be examined by this Court on that date.

[ILLEGIBLE], Sub-Judge.

Alipore, the 1st September 1936. (1846—1)

In the 4th Court of the Sub-Judge of 24-Parganas.

INSOLVENCY CASE No. 371 OF 1936.

(1) Asharam Naskar, (2) Siburam Naskar and (3) Mritunjoy Naskar of Natun Deara, police-station Sonarpur, 24-Parganas, applicant.

To Barada Prasad Chattopadhaya Ghatak of Baisnabghata, Tollygunge, 24-Parganas, and others, creditors.

ON the 26th day of August 1936 it was ordered that the matter of the petition of the applicant be heard on the 5th day of October 1936, and that the said applicant do attend to be examined by this Court on that date.

[ILLEGIBLE], Sub-Judge.

Alipore, the 27th August 1936. (1847—1)

In the 4th Court of the Sub-Judge of 24-Parganas.

INSOLVENCY CASE No. 374 OF 1936.

Phani Bhusan Ghosh of 7, Kali Mohan Banerjee Lane, Bhowanipore, 24-Parganas, applicant.

To Gostalal Sen of 31, Hem Chandra Street, Kidderpore, Calcutta, and others, creditors.

ON the 28th day of August 1936 it was ordered that the matter of the petition of the applicant be heard on the 12th day of October 1936, and that the said applicant do attend to be examined by this Court on that date.

[ILLEGIBLE], Sub-Judge.

Alipore, the 31st August 1936. (1848—1)

In the 4th Court of the Sub-Judge of 24-Parganas.

INSOLVENCY CASE No. 376 OF 1936.

Jagannath Misir of 9, Munshibazar, police-station Entally, 24-Parganas, applicant.

To Daben Shah of 7, Wellesley Street, Calcutta, and others, creditors.

ON the 22nd day of August 1936 it was ordered that the matter of the petition of the applicant be heard on the 5th day of October 1936, and that the said applicant do attend to be examined by this Court on that date.

[ILLEGIBLE], Sub-Judge.

Alipore, the 25th August 1936. (1849—1)

In the 4th Court of the Sub-Judge of 24-Parganas.

INSOLVENCY CASE No. 377 OF 1936.

Ramzan Ali of Chota Bysack Bagan, Cossipore, 24-Parganas, applicant.

To Lakhimoni Dassi of 95, Cossipore Road, 24-Parganas, and others, creditors.

ON the 24th day of August 1936 it was ordered that the matter of the petition of the applicant be heard on the 5th day of October 1936, and that the said applicant do attend to be examined by this Court on that date.

[ILLEGIBLE], Sub-Judge.

Alipore, the 25th August 1936. (1850—1)

In the 4th Court of the Sub-Judge of 24-Parganas.

INSOLVENCY CASE No. 379 OF 1936.

Hemanta Kumar Bose of 39/1/2A, Canal West Road, Manicktola, 24-Parganas, applicant.

To Roy Harendranath Chaudhury of Baranagore Kothi Ghat, 24-Parganas, and others, creditors.

ON the 26th day of August 1936 it was ordered that the matter of the petition of the applicant be heard on the 5th day of October 1936, and that the said applicant do attend to be examined by this Court on that date.

[ILLEGIBLE], Sub-Judge.

Alipore, the 27th August 1936. (1851—1)

In the 4th Court of the Sub-Judge of 24-Parganas.

INSOLVENCY CASE No. 380 OF 1936.

Bhupendranath Dutt of 63, Ashutosh Mukherjee Road, Bhowanipore, 24-Parganas, applicant.

To Naresh Chandra Basu of 26B, Telipara Lane, Calcutta, and others, creditors.

ON the 26th day of August 1936 it was ordered that the matter of the petition of the applicant be heard on the 5th day of October 1936, and that the said applicant do attend to be examined by this Court on that date.

[ILLEGIBLE], Sub-Judge.

Alipore, the 27th August 1936. (1852—1)

In the 4th Court of the Sub-Judge of 24-Parganas.

INSOLVENCY CASE No. 382 OF 1936.

Sambhu Nath Dutta, of 96, Ashutosh Mukherjee Road, police-station Bhowanipore, 24-Parganas, applicant.

To Prativarani Ghosh of 26, Protapaditya Road, Kalighat, Calcutta, and others, creditors.

ON the 27th day of August 1936 it was ordered that the matter of the petition of the applicant be heard on the 5th day of October 1936, and that the said applicant do attend to be examined by this Court on that date.

[ILLEGIBLE], Sub-Judge.

Alipore, the 27th August 1936. (1853—1)

In the 4th Court of the Sub-Judge of 24-Parganas.

INSOLVENCY CASE No. 383 OF 1936.

Sheikh Monmotha of Titagarh Mathpara, Titagarh, 24-Parganas, applicant.

To Durga Sing Kistiwala of Cancil Mill Line, Titagarh, 24-Parganas, and others, creditors.

ON the 27th day of August 1936 it was ordered that the matter of the petition of the applicant be heard on the 12th day of October 1936, and that the said applicant do attend to be examined by this Court on that date.

[ILLEGIBLE], Sub-Judge.

Alipore, the 31st August 1936. (1854—1)

In the 4th Court of the Sub-Judge of 24-Parganas.

INSOLVENCY CASE No. 384 OF 1936.

Mahabir Prasad Sarma of Neogypara, Baranagore, 24-Parganas, applicant.

To Niranjan Lal Khemka of 187, Dharmatola Street, Calcutta, and others, creditors.

ON the 28th day of August 1936 it was ordered that the matter of the petition of the applicant be heard on the 12th day of October 1936, and that the said applicant do attend to be examined by this Court on that date.

[ILLEGIBLE], Sub-Judge.

Alipore, the 31st August 1936. (1855—1)

In the 4th Court of the Sub-Judge of 24-Parganas.

INSOLVENCY CASE No. 385 OF 1936.

Nilmoni Banerjee of 53, Anathnath Deb Lane, Belgachia, 24-Parganas, applicant.

To Ram Chhabila Singh of 233, Darmahatta Street, Calcutta, and others, creditors.

ON the 28th day of August 1936 it was ordered that the matter of the petition of the applicant be heard on the 12th day of October 1936, and that the said applicant do attend to be examined by this Court on that date.

[ILLEGIBLE], Sub-Judge.

Alipore, the 31st August 1936. (1856—1)

In the 4th Court of the Sub-Judge of 24-Parganas.

INSOLVENCY CASE No. 387 OF 1936.

Panchanan Sarkar of 2, Telangabagan Lane, Manicktola, 24-Parganas, applicant.

To Joti Prasad & Sons, Howrah Road, post office Golabari, Howrah, and others, creditors.

ON the 29th day of August 1936 it was ordered that the matter of the petition of the applicant be heard on the 12th day of October 1936, and that the said applicant do attend to be examined by this Court on that date.

[ILLEGIBLE], Sub-Judge.

Alipore, the 1st September 1936. (1857—1)

In the 4th Court of the Sub-Judge of 24-Parganas.

INSOLVENCY CASE No. 388 OF 1936.

Sk. Abdul Latif of Dent Mission Road, Kidderpore, police-station Ekbalpore, 24-Parganas, applicant.

To Lal Khan Adam Khan of 69, Ekbalpore Road, Kidderpore, Calcutta, and others, creditors.

ON the 29th day of August 1936 it was ordered that the matter of the petition of the applicant be heard on the 12th day of October 1936, and that the said applicant do attend to be examined by this Court on that date.

[ILLEGIBLE], Sub-Judge.

Alipore, the 1st September 1936. (1858—1)

In the 4th Court of the Sub-Judge of 24-Parganas.

INSOLVENCY CASE No. 391 OF 1936.

Phatick Chandra Ray of 14, Sankar Bose Road, police-station Alipore, 24-Parganas, applicant.

To Panchugopal Mukerjee of 17, Nasir Lane, Kidderpore, Calcutta, and others, creditors.

ON the 31st day of August 1936 it was ordered that the matter of the petition of the applicant be heard on the 12th day of October 1936, and that the said applicant do attend to be examined by this Court on that date.

[ILLEGIBLE], Sub-Judge.

Alipore, the 1st September 1936. (1859—1)

In the 4th Court of the Sub-Judge of 24-Parganas.

INSOLVENCY CASE No. 393 OF 1936.

Monajaddin alias Manajuddin of Dry Dock, Kidderpore, 24-Parganas, applicant.

To Syed Guljar Khan of 12, Michael Dutt Street, Calcutta, and others, creditors.

ON the 31st day of August 1936 it was ordered that the matter of the petition of the applicant be heard on the 12th day of October 1936, and that the said applicant do attend to be examined by this Court on that date.

[ILLEGIBLE], Sub-Judge.

Alipore, the 1st September 1936. (1860—1)

ORDER ANNULLING ADJUDICATION.

Section 43 of the Provincial Insolvency Act, V of 1920.

In the Court of the District Judge at Alipore.

INSOLVENCY APPLICATION No. 25 OF 1933.

Bijoy Krishna Hazra and another, creditor-applicants.

WHEREAS Jamsed Ali of Salika, police-station Magrahat, 24-Parganas, debtor, does neither appear nor apply for his discharge within the specified time, it is ordered that the order of adjudication, dated 5th June 1933, against the debtor be and the same is hereby annulled.

Dated this 31st day of August 1936.

T. H. ELLIS, District Judge.

ORDER ANNULLING ADJUDICATION.

Section 43 of the Provincial Insolvency Act, V of 1920.

In the 4th Court of the Sub-Judge at Alipore.

INSOLVENCY APPLICATION No. 276 OF 1935.

Kanti Bhusan Roy, applicant.

WHEREAS Kanti Bhusan Roy of 51, Halderpara Road, Kalighat, 24-Parganas, debtor, does neither appear nor apply for his discharge within the specified time, it is ordered that the order of adjudication, dated 24th February 1936, against the debtor be and the same is hereby annulled.

Dated this 24th day of August 1936.

[ILLEGIBLE], Sub-Judge.

ORDER ANNULLING ADJUDICATION.

Section 43 of the Provincial Insolvency Act, V of 1920.

In the 4th Court of the Sub-Judge at Alipore.

INSOLVENCY APPLICATION No. 489 OF 1935.

Mahamod Thandar, applicant.

WHEREAS Mahamod Thandar of, Katalbariya, Bartala, police-station Matiaburuz, 24-Parganas, debtor, does neither appear nor apply for discharge within the specified time, it is ordered that the order of adjudication, dated 24th February 1936, against the debtor be and the same is hereby annulled.

Dated this 24th day of August 1936.

[ILLEGIBLE], Sub-Judge.

ORDER ANNULLING ADJUDICATION.

Section 43 of the Provincial Insolvency Act, V of 1920.

In the 4th Court of the Sub-Judge at Alipore.

INSOLVENCY APPLICATION No. 497 OF 1935.

Guru Buksh Goswain, applicant.

WHEREAS Guru Buksh Goswain of Gouripore, Naihaty, 24-Parganas, debtor, does neither appear nor apply for discharge within the specified time, it is ordered that the order of adjudication, dated 24th February 1936, against the debtor be and the same is hereby annulled.

Dated this 24th day of August 1936.

[ILLEGIBLE], Sub-Judge.

MR. DWIJENDRA KUMAR BOSE, B.L., intends to be enrolled as an Advocate of the High Court. (1759—4)

MR. ROHINI KANTO GHOSE, M.A., B.L., intends to be enrolled as an Advocate of the High Court. (1820—4)

MR. AMULYA CHARAN NASKER, B.L., intends to be enrolled as an Advocate, High Court.
(1740—4)

MR. SISIR KUMAR BASU, M.A., B.L., intends to enrol as an Advocate of the Calcutta High Court.
(1680—4)

APPLICATIONS are invited for the post of Assistant Director, Civil Veterinary Department, in the Bengal Lower Veterinary Service, on the scale of Rs. 150—25—200—25/2—300—50/2—650 (probationary period of two years and efficiency bar after the 18th stage) from Muhammadan candidates who possess the M.R.C.V.S. diploma or the diploma of a recognised Veterinary College. Full particulars and instructions regarding the appointment are published in Part I of the Calcutta Gazette, dated the 3rd September 1936, under the Agriculture and Industries Department notification No. 5737 Vety., dated the 31st August 1936.

H. S. E. STEVENS,
Secy. to the Govt. of Bengal,
Agriculture and Industries Department.

WANTED by the district board of Jalpaiguri an Assistant Engineer on a pay of Rs. 150—25/2—200—10—300 with efficiency bar at Rs. 200 and travelling allowance according to the Fundamental Rules. None but a B. E. need apply. Preference will be given to an experienced man having knowledge in district board works. Application with copies of testimonials will be received by the undersigned up to 15th September 1936.

Rai Sahib K. C. GUE, B.A., B.Sc., B.E.,
District Engineer, Jalpaiguri.

Dated Jalpaiguri, the 20th August 1936. (1744—3)

IT is hereby notified for general information that the partnership between Messrs. Hardeodas Bhimraj of No. 161/1, Harrison Road, Calcutta, and the undersigned, relating to the business carried on under the name and style of "Union Welding and Engineering Company" at No. 141/2, Dhurrumtolla Street, Calcutta, has been dissolved with effect from 14th April 1936. Since then the undersigned has retired and the said business was taken over and is carried on by Messrs. Hardeodas Bhimraj on their own account and sole responsibility.

RADHA KRISHNA KOTHARY.

29, Strand Road, Calcutta, the 4th September 1936.
(1861—1)

TENDERS are invited for binding the records-of-rights of Midnapore Settlement. Samples may be seen in the office of the undersigned at 35, Gopalnagar Road, Alipore, on office days between 11 a.m. to 5 p.m., and tenders submitted in sealed covers so as to reach the Settlement Officer positively by 24th September 1936.

S. M. HUSSAIN, Settlement Officer,
Land Revenue Settlement, Western Circle, Alipore.

SEALED tenders are invited for the supply of press materials, etc., for use in the Rangpur Settlement Press, which will be received by the undersigned up to 20th September 1936. The undersigned is not bound to accept the lowest or any tenders.

U. C. BANARJI,
for Settlement Officer, Rangpur.

Rangpur, the 29th August 1936.

Estate Donald Stewart Cook, deceased.

PURSUANT to section 360 of Act XXXIX of 1925 and section 42 of Act XXVIII of 1866, the creditors and all persons interested in the estate of Donald Stewart Cook, late of 74, now numbered 130, Finnart Street, Greenock, Scotland, retired Engineer, who died at Greenock aforesaid, on the 18th day of December 1935, and Letters of Administration to whose estate were granted by the High Court, Calcutta, on the 20th day of August 1936, are hereby required to submit particulars of their claims to the undersigned on or before the 10th day of October 1936, after which date the Administrator will distribute the assets, having regard only to the claims of which notice shall then have been received.

ORR, DIGNAM & CO.,
Solicitors to the Administrator.

32, Dalhousie Square, South, Calcutta, 1st September 1936. (1828—1)

Notice under section 10A of Act IX (B.C.) of 1879.

WHEREAS [under sections 7 and 35 of the Court of Wards Act (Act IX (B.C.) of 1879) as amended to date] the Court of Wards has assumed charge of the property of Babus Bhola Nath Banerjee, Purna Chandra Banerjee, Biswa Nath Banerjee and Shambhu Nath Banerjee, a minor, in the district of 24-Parganas.

Notice is hereby given under section 10A of the said Act that all creditors having claims against the said abovenamed proprietors or their immovable properties are hereby required to submit the same in writing to the Wards Sub-Deputy Collector of the 24-Parganas at his office at Alipore within six months from the date of publication of this notice. Creditors are hereby warned that claims not submitted as required by this notice shall cease to carry interest from the date of expiry of the period aforesaid.

P. B. MITTRA,
Wards Sub-Deputy Collector.

Alipore, the 31st August 1936. (1826—1)

THE Bengal and Madras Service Family Pension Fund which is provisionally managed and assisted by Government has for its object the provision of monthly pensions for the maintenance of the widows and children of subscribers and is open, with certain exceptions, to all active and pensioned members of the Uncovenanted service of Government (except those serving under the Government of Bombay), and to Local Fund servants earning pensions from Government. Some of the special features of the fund are (1) that widowed daughters incapable of re-marriage or children labouring under such mental or bodily infirmities as incapacitate them from earning their livelihood or preclude the possibility of marriage (in case of a daughter) are admitted to its benefits; and (2) that subscribers to the Widows and Daughters' branches are entitled to a refund of 30 per cent. of the premia paid, should the nominee predecease them after five years of admission. The second quinquennial valuation of the Fund has been completed by the Actuary to the Government of India, and his report discloses very favourable results. For forms of application and rules of the Fund apply to the Accountant-General, Bengal, Imperial Secretariat Buildings Calcutta.

Custom House Notice.

NOTICE is hereby given that whereas Messrs. J. F. Madan have failed to meet the demand made for duty on 33 packages of Four Crown whisky marked

J. F. M.
Calcutta

ex-ss. "Marhatta", and bonded at 5, Dharamtolla Street, under warehousing bill of entry No. 88 of 18th December 1931, the said goods will be sold by auction on the 15th September 1936 at noon in Messrs. Mackenzie Lyall & Co.'s sale room at No. 5, Mission Row, Calcutta, under the provisions of section 119 of the Sea Customs Act.

G. N. BOWER, Collector of Customs.

Custom House, Calcutta, the 29th/31st August 1936.
(1818—2)

Custom House Notice.

NOTICE is hereby given that whereas Messrs. Turnbull Brothers (Merchants), Ltd., have failed to meet the demand made for duty on 22 packages of Highland Cream whisky marked 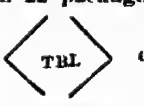

ex-ss. "C/o Venice" and bonded at 1/1, Umakanto Sen Lane, under warehousing bill of entry No. 11 of 4th August 1931, the said goods will be sold by auction on the 17th September 1936 at noon in Messrs. Mackenzie Lyall & Co.'s sale room at No. 5, Mission Row, Calcutta, under the provisions of section 119 of the Sea Customs Act.

G. N. BOWER, Collector of Customs.

Custom House, Calcutta, the 29th/31st August 1936.
(1819—2)

Lost.

THE Government promissory note No. 202171 of the 3½ per cent. loan of 1900-01 for Rs. 1,000 originally standing in the name of Bhoobun Mohini Debee (since deceased), the proprietress, by whom it was never endorsed to any other person, having been lost, notice is hereby given that payment of the above note and the interest thereupon have been stopped at the Public Debt Office, Reserve Bank of India, Calcutta, and that application is about to be made for the issue of duplicate in favour of Sm. Sasti Money Debi. The public are cautioned against purchasing or otherwise dealing with the abovementioned security.

Signature of the advertiser—Sasti Money Debi.

Residence—Khasbati, Halisahar, Hazinagore P.O., district 24-Parganas.

(1730—3)

Note.

PORTION of the following note of the Calcutta Circle of Issue is stated to have been destroyed. Payment of its value has been claimed by the person whose name is placed against the number. Any other person claiming a right to it is warned to communicate at once with the undersigned :—

Regtd. No.	No. of the note.	Value.	Name and address of the claimant.
		Rs.	
W. D. 13 of 36.	T/13, 659649	100	Sekh Abdul Rauf, s/o Sk. Mohamad Nayeen, village Nipania, p. o. Marhowrah, district Saran.

S. GUPTA, Currency Officer.

Reserve Bank of India, Issue Department, Calcutta, the 20th August 1936.

Lost.

A RECEIPT numbered 93, dated 3rd February 1934, and granted by the Imperial Bank of India, Public Debt Office, on submission of the Calcutta Municipal debenture. Notice of loss has been given to the Imperial Bank of India, Local Authorities Loan Section, and the undersigned is about to apply for the surrender of the security:—

Debenture No.	Loan.	Amount.	Holder's name.
		Rs.	
1866	4 per cent., 1904-05.	500	Upendra Nath Ghose, surviving executor to the estate of Rai Shahib Gyan Chandra Chaudhuri, deceased.

Name of the proprietor—Upendra Nath Ghose, surviving executor to the estate of late Gyan Chandra Chaudhuri.

Residence—25C, Balaram Ghosh's Street, Shambazar, Calcutta.

(1871—1)

In the matter of the Indian Companies Act, 1913, and

In the matter of the Malay Insurance Co., Ltd. (in liquidation).

NOTICE is hereby given that a meeting of the creditors of the Malay Insurance Company will be held on the 18th September 1936 at the registered office of the Company at Dinajpur at 6-30 p.m.

The creditors must lodge their claims supported by documents with the undersigned on or before the 15th day of September 1936.

BIJOY RANJAN MITTRA,
KAMAKHYA CHARAN CHAKRABORTY,
Liquidators.

Dinajpur, the 24th August 1936.

(1793—1)

In the matter of the Indian Companies Act, VII of 1913, and

In the matter of the Asiatic Planters, Ltd. (in liquidation).

Proceedings of adjourned extraordinary general meeting of the Asiatic Planters, Ltd., held at the registered office of the Company at 9, Clive Row, Calcutta, on Friday, the 4th September 1936, at 1-30 p.m. The following member was present:—

1. Debidas Lahiri.

THE following resolution was passed:—

That it has been proved to the entire satisfaction of this meeting that the Company cannot by reason of its liabilities continue its business and that it is advisable to wind up voluntarily. Be resolved that the Company be wound up voluntarily. That Mr. K. N. Sircar, M.A., LL.B., Advocate, of 78, Amherst Street, Calcutta, be and is hereby appointed liquidator for the purpose of such winding up.

The resolution was passed as an extraordinary resolution.

DEBIDAS LAHIRI,
Chairman.

9, Clive Row, Calcutta,
The 4th September 1936.

(1872—1)

In the matter of the Indian Companies Act, VII of 1913 and

In the matter of Thacker Spink & Co., Ld. (in liquidation).

NOTICE is hereby given that a first and final dividend of 10·75 pies in the Rupee has been declared and that the same will be payable on the 6th day of October 1936 at the office of the Official Liquidator, No. 4, Lyons Range, Calcutta.

Every person entitled to participate in this dividend will receive a notice to that effect and no payment will be made except upon production of such notice.

DAVID MITCHELL, Official Liquidator.

4, Lyons Range, Calcutta, the 3rd September 1936.

(1827—1)

In the matter of the Indian Companies Acts of 1913-20, Act VII of 1913 and Act IX of 1920 and

In the matter of Port Engineering Works, Limited.

NOTICE is hereby given that the Order of the High Court made herein and dated the 24th day of August 1936, confirming the reduction of Capital of the abovenamed Company from Rs. 7,50,000 to Rs. 5,00,000 and the Minute approved by the Court showing with respect to the Capital of the Company as altered the several particulars required by the above Statute was registered by the Registrar of Joint Stock Companies, Bengal, on the 4th day of September 1936. The said Minute is in the words and figures following:—

"The Capital of the Port Engineering Works, Limited, henceforth is Rs. 5,00,000 divided into 50,000 shares of Rs. 10 each instead of the original capital of Rs. 7,50,000 divided into 50,000 shares of Rs. 10 each and 2,500 Preference Shares of Rs. 100 each. At the time of the registration of this Minute the sum of Rs. 10 has been paid and is deemed to be paid up on all the issued ordinary shares."

Dated the 7th day of September 1936.

ORR, DIGNAM & CO.,
Solicitors for the Company.

(1877—1)

Imperial Library.

Secretariat Buildings, 6, Esplanade East, Calcutta.

Open on—

Week days and Saturdays from 10 a.m. to 7 p.m.
Sundays and Gazetted holidays from 2 p.m. to 5 p.m.

THE Imperial Library is also a Lending Library. It is free to all except children. There is no subscription to pay.

K. M. ASADULLAH, Librarian.

CINCHONA FACTORY PRODUCTS.

By order of the Government of Bengal Cinchona Factory Products as manufactured and packed at the Cinchona Factory, Mungpoo, Darjeeling district, will be sold and distributed by the Superintendent of the **Presidency Jail,** *in original packages as* received from the Mungpoo Factory, at the rates herein noted **from the 1st May 1926 :—**

Name of drug.	Price per lb. in powder form. Taken at a time. For 60 lbs. and upwards.	For 6 lbs. and over but less than 60 lbs.	For any quantity less than 6 lbs.	Price in 5 grain tablets. 1,000 tablets.	500 tablets.	250 tablets.	Price by weight per lb.
	Rs.	Rs.	Rs.	Rs.	Rs. a.	Rs. a.	Rs.
Quinine Bisulphate ..	18	19	20	16	8 0	4 4	..
,, Hydrobromide ..	23	24	25	20	10 0	5 4	..
,, Bihydrobromide ..	26	27	28	23	11 8	6 0	..
,, Salicylate ..	24	25	26	..	..	..	..
,, Tannate ..30 per cent. 35 per cent.	14	15	16	..	..	..	14

N.B.—Packing free in tins, sizes 1 lb., 8 oz. and 4 oz. only. Packing in bottles or smaller sizes of tins extra.

Quinine Sulphate.

For 60 lbs. and upwards at a time .. Rs. 18 per lb.
For 6 lbs. and over but less than 60 lbs. at a time .. .. .. ,, 19 ,,
For any quantity less than 6 lbs. .. ,, 20 ,,

Totaquina.

Irrespective of quantity .. Rs. 13-8 per lb.
For sale to hospitals and dispensaries in Bengal, Bihar, Orissa and Assam.

Quinine Hydrochloride.

For 60 lbs. and upwards at a time .. Rs. 23 per lb.
For 6 lbs. and over but less than 60 lbs. at a time .. .. .. ,, 24 ,,
For any quantity less than 6 lbs. .. ,, 25 ,,

Quinine Di-Hydrochloride.

For 60 lbs. and upwards at a time .. Rs. 25 per lb.
For 6 lbs. and over but less than 60 lbs. at a time .. .. .. ,, 26 ,,
For any quantity less than 6 lbs. .. ,, 27 ,,

Quinidine Sulphate.

For 60 lbs. and upwards at a time .. Rs. 20 per lb.
For 6 lbs. and over but less than 60 lbs. at a time .. .. .. ,, 21 ,,
For any quantity less than 6 lbs. .. ,, 22 ,,

Cinchonidine Sulphate.

For 60 lbs. and upwards at a time .. Rs. 25 per lb.
For 6 lbs. and over but less than 60 lbs. at a time .. .. .. ,, 26 ,,
For any quantity less than 6 lbs. .. ,, 27 ,,

Cinchonine Sulphate.

For 60 lbs. and upwards at a time .. Rs. 12 per lb.
For 6 lbs. and over but less than 60 lbs. at a time .. .. .. ,, 13 ,,
For any quantity less than 6 lbs. .. ,, 14 ,,

*Cinchona Febrifuge (Powder).

For 60 lbs. and upwards at a time .. Rs. 9 per lb.
For 6 lbs. and over but less than 60 lbs. at a time .. .. .. ,, 9 ,,
For any quantity less than 6 lbs. .. ,, 10 ,,

*Cinchona Febrifuge (Tablets).

For 60 lbs. and upwards at a time .. Rs. 10 per lb.
For 6 lbs. and over but less than 60 lbs. at a time .. .. .. ,, 10 ,,
For any quantity less than 6 lbs. .. ,, 11 ,,

Supply of Cinchona Febrifuge to all authorised indentors will be rationed in the proportion of 1½ of Cinchona Febrifuge to 1 of Quinine Sulphate at their existing prescribed prices.

Cinchona Bark (in 50 pound original bags).

Per bag -- -- -- Rs. 25.

4 grains Quinine Tablets.

Rs. a.
2 8 per box of 200 tablets (for Bengal and other provinces).
12 1 per 5 boxes—(Transit charges inclusive) for Public in Bengal.
15 8 per lb.

5 grains Quinine Tablets.

Rs. a.
15 8 per lb. sold in 1 lb., ½ lb. and ¼ lb. tins.

5 grains Quinine Hydrochloride Tablets.

Rs. a.
20 0 per 1,000 tablets.
10 0 ,, 500 ,,
5 4 ,, 250 ,,

Packing free in tins, sizes 1 lb., 8 oz. and 4 oz. only. Packing in bottles or smaller sizes in tins extra.

5 grains Quinine Bihydrochloride Tablets.

Rs. a.
22 0 per 1,000 tablets.
11 0 ,, 500 ,,
6 0 ,, 250 ,,

Packing free in tins, sizes 1 lb., 8 oz. and 4 oz. only. Packing in bottles or smaller sizes in tins extra.

Transit charges extra in every case.

***Cinchona Febrifuge** is for sale to Government and Charitable Institutions, Local Bodies and Missionaries only. **It is not for sale to Private Firms or the General Public.**

Quinine Sulphate is now open for sale to the Public at the above rates. But it will be supplied to Hospitals and Dispensaries in Bengal, Bihar, Orissa and Assam at Rs. 18 per pound irrespective of quantities.

Five and ten boxes of Quinine Tablets are sold to the public at the concession rates which will be intimated on application.

Provinces other than Bengal, Bihar, Orissa and Assam will get their supplies of Sulph. Quinine and Cinchona Febrifuge Powder and Tablets from the Director, Botanical Survey of India, Sibpur, Howrah.

Local sale at the jail gate from 10 to 12 noon.

The system of payment is by—*Cash in advance*—by "*Treasury Challans,*" which should accompany the order or indent.

In cases where this is not possible, payment should be made by "*Remittance Transfer Receipts*" or crossed "*Cheques.*"

Indents unaccompanied by cash in advance will be sent Value Payable Post. Credit sale is not allowed except under special circumstances.

In the case of *Government officers* payments will be recovered by *Book Transfer, i.e., Countersigned Invoices,* in the event of *Cash* not accompanying the indent by "*Treasury Challans,*" *Remittance Transfer Receipt or Cheque.*

2. Price and postage must accompany the price of the drug (when the drug is required by post).

The name of the Railway and Steamer Station or Post Office must be written distinctly when the parcels are required by Rail, Steamer or by Post. Railway parcels are sent by passenger train only.

A scale of postage is given below.

	1 oz.	2 ozs.	4 ozs.	½ lb.	¾ lb.	1 lb.
	As.	As.	As.	As.	As.	Rs. A.
Quinine Sulph. ..	..	..	7	7	11	0 11
Cinchona Feb. ..	..	..	7	7	11	0 11
Cinchona Feb. Tablets	..	..	7	7	11	0 11
Quinine Hydrochlor. ..	5	5	7	7	..	0 11
Quinine Di-hydrochlor.	5	5	7	7	..	0 11
Quinine Tablets ..	..	..	7	7	11	0 11
Totaquina ..	..	..	7	7	11	0 11

	1¼ lb.	2 lb.	3 lb.	4 lb.	5 lb.	6 lb.
	Rs. A.	Rs. A.	Rs. A.	Rs. A.	Rs. A.	Rs. A.
Quinine Sulph. ..	0 15	1 3	1 7	1 15	2 7	2 11
Cinchona Feb. ..	0 15	1 3	1 7	1 11	2 3	2 7
Cinchona Feb. Tablets	0 15	1 3	1 11	1 15	2 7	2 15
Quinine Hydrochlor. ..	0 15	1 3	1 7	1 15	2 7	2 11
Quinine Di-hydrochlor.	0 15	0 15	1 7	1 11	2 3	2 7
Quinine Tablets ..	0 15	0 15	1 7	1 11	1 15	2 3
Totaquina ..	0 15	1 3	1 7	1 15	2 7	2 11

Two different drugs are not packed in the same parcel and postage must be paid separately for each kind.

N.B.—Postage stamps are not accepted as revenue.

Government reserve the right to alter the price without notice.

Registered No. C207

No. 37 of 1936

The Calcutta Gazette

THURSDAY, SEPTEMBER 10, 1936.

CONTENTS:

	Page.		Page.
Final Forecast of the Jute Crop, 1936 ..	1197—1212	Statements of weekly gauge-readings on certain rivers in Bengal	1221—1222
Weather and Crop Report for the week ending 2nd September 1936 ..	1213—1216	Corporation of Calcutta Notices ..	1222
Prices-current (wholesale and retail) of Food-grains, Salt, etc., in the districts of Bengal for the second half of August 1936	1217—1220	Statements under the Cotton Ginning and Pressing Factories Act, 1925 ..	1223
		Vital Statistics of towns of Bengal for the week ending 29th August 1936 ..	1224

SUPPLEMENT.

Official Papers.

FINAL FORECAST OF THE JUTE CROP, 1936.

Consolidated statement for Bengal, Bihar, Orissa, and Assam.

Area.—The revised estimated area for the four provinces is 2,545,600 acres, an increase of 364,700 acres as compared with the revised final Forecast for 1935. The total increase as compared with the acreage in the Preliminary Forecast for 1936 is due to revision in the estimates for the three provinces.

Yield.—It is estimated that the crop will yield 8,735,800 bales of jute, exceeding last year's total (revised) by 1,496,200 bales.

The consolidated returns are as follows:—

Province.	Area in acres.			Yield in bales.		
	1935.	1936.	Difference.	1935.	1936.	Difference.
Bengal (including Cooch Behar and Tripura States).	1,917,500*	2,180,800	+263,300	6,538,000*	7,774,500	+1,236,500
Bihar ..	128,400	211,000*	+82,600	344,300*†	520,000†	+175,700
Orissa ..	17,200	13,500*	−3,700	44,700	28,800	−15,900
Assam	117,800*	140,300*	+22,500	312,600*	412,500	+99,900
Total ..	2,180,900*	2,545,600*	+364,700	7,239,600*	8,735,800	+1,496,200

* Revised. † Including Nepal.

The Departmental Final Forecasts for the four provinces are appended.

KENNETH McLEAN,
Director of Agriculture, Bengal.

CALCUTTA:
The 9th September 1936.

APPENDIX.

Abstract statement of estimated acreage and outturn of the jute crop, 1936.

(For Bengal, Bihar, Orissa and Assam consolidated.)

Acreage.							Outturn in bales.							
				Percentage by which column 1 exceeds (+) or falls short of (−) area in—				Yield of previous year according to—				Percentage by which column 8 exceeds (+) or falls short of (−) outturn in—			
Of current year's crop.	Of previous year's crop.	Average of five preceding years (viz., 1930—1934).	Average of ten preceding years (viz., 1925—1934).	Column 2.	Column 3.	Column 4.	Estimated yield of current year.	Crop forecast.	Trade statistics.	Average of five preceding years (viz., 1930—1934).	Average of ten preceding years (viz., 1925—1934).	Column 9(a).	Column 9 (b).	Column 10.	Column 11.
1	2	3	4	5	6	7	8	9(a)	9(b)	10	11	12	13	14	15
2,545,600	2,180,900*	2,537,000	2,958,000	+16·72	+0·34	-13·94	8,735,800	7,289,600*	8,182,399	8,001,200	9,222,300	+20·67	+6·76	+7·97	−5·28

*Revised.

DEPARTMENT OF AGRICULTURE, BENGAL.

Final Forecast of the Jute Crop of Bengal, 1936.

[NOTE.—**On an average of the five years ending 1934-35, the area under jute in Bengal, to which this forecast relates, represents some 85·5 per cent. of the total area under jute in British India.**]

Season.—As indicated in the Preliminary Forecast, sowings were generally carried out under favourable circumstances. Subsequent conditions, on the whole, favoured growth and development in East Bengal. In parts of Mymensingh, Dacca, Tippera and Noakhali, a sudden rise of the river level induced cultivators to cut immature jute, but the rivers subsequently fell to the normal level. In North Bengal, the crop flourished well except in Darjeeling and Jalpaiguri, where excessive rain interfered with operations and reduced the yield. Recent floods in Pabna, Rajshahi and Malda did some damage in low lying tracts. In West Bengal, continuous rain affected the crop and growth was not uniform. Floods in Murshidabad and Nadia districts have damaged the crop in places. Steeping water has been sufficient and the quality of the fibre is better than it has been for several years in consequence.

Condition of the Crop.—With the exceptions noted above, the crop is good.

Area of the Crop.—The area under jute is estimated to be 2,180,800 acres as against 1,917,500 acres (revised) in 1935.

Outturn.—As in previous years, the percentage figures are calculated on the basis of divisional normals which remain as follows:—

	Bales per acre.
Dacca and Chittagong Divisions	3·7
Rajshahi Division	3·5
Presidency and Burdwan Divisions	3·2

The total outturn of the crop is estimated at 7,774,500 bales as against 6,538,000 bales (revised) last year.

Stocks.—It is reported that stocks outside Calcutta have been considerably reduced, the estimated amount being 3½ lakhs.

KENNETH McLEAN,
Director of Agriculture, Bengal.

CALCUTTA:
The 9th September 1936.

APPENDIX I.

Final Forecast of the Jute Crop of Bengal, 1936.

District.	Estimated area under jute, in acres.		Estimated outturn as a percentage of the normal yield per unit of area.		Estimated total yield, in bales of 400 lbs.		Date by which harvesting generally commenced and whether that date was early, normal or late.	Remarks by District Officers.
	Last year.	This year.	Last year.	This year.	Last year.	This year.		
1	2	3	4	5	6	7	8	9
	Acres.	Acres.			Bales.	Bales.		
24-Parganas ..	45,000	53,000	100	103·13	144,000	175,000	1st week of August. Early.	Increase is due to failure of paddy in previous year and improved prices of jute.
Nadia ..	*51,000	61,000	99·70	92·19	*163,000	180,000	Middle of August Kushtia. Not yet elsewhere.	Increased yield due to increase in area. Incessant rain and floods reduced outturn per acre.
Murshidabad ..	*25,000	35,000	100	93·75	*80,000	105,000	Not yet commenced	Reduced yield due to continuous rain and damage by floods.
Jessore ..	70,000	85,000	89·37	66·25	200,000	180,000	End of July. Normal.	Incessant rain reduced yield.
Khulna ..	*25,500	25,000	90	100	*73,500	80,000	Beginning of August. Late.	Weather favoured the crop.
Burdwan ..	1,000	1,500	93·75	104·06	3,000	5,000	Last week of August. Normal.	Weather conditions favoured the crop.
Midnapore ..	3,000	4,000	104·06	90	10,000	11,500	Middle of August. Tamluk. Elsewhere not commenced.	Weather conditions favourable.
Hooghly ..	18,000	22,500	93·75	102·81	54,000	74,000	Not yet commenced	Excessive rainfall and insect attack affected the crop to some extent.
Howrah ..	3,000	4,000	93·75	101·56	9,000	13,000	Not yet commenced	Conditions favourable.
Rajshahi ..	*75,000	87,500	91·43	102·86	*240,000	315,000	Middle of July. Normal.	At sowing time short rainfall affected crop; but conditions subsequently favourable. Some insect damage reported.
Dinajpur ..	*55,500	63,000	83·43	102·86	*162,000	228,000	July. Normal ..	Even and well distributed rainfall favoured the crop.
Jalpaiguri ..	22,000	31,000	85·71	85·71	66,000	93,000	Middle of August. Normal.	Excessive rainfall and want of sunshine affected the crop.
Darjeeling ..	1,500	2,000	85·71	85·71	4,500	6,000	August Normal ..	Excessive rainfall affected the crop.
Rangpur ..	*197,000	233,000	99·14	102·86	*684,000	838,000	First week of July. Normal.	Weather favourable.
Bogra ..	*75,000	80,000	95·14	100	*250,000	280,000	July. Normal ..	Outturn not above normal on account of short rainfall at sowing time.
Pabna ..	*69,000	75,000	102·86	100	*248,000	263,000	Middle of July. Normal.	Weather favourable at sowing time. But outturn not above normal on account of insufficient rainfall after sowing.
Malda ..	*10,000	12,000	79·71	85·71	*28,000	36,000	First week of August. A little late.	Crop damaged by floods.
Dacca ..	235,000	264,000	96·49	101·62	840,000	993,000	Third week of July. Normal.	....
Mymensingh ..	460,000	518,000	100	102·7	1,702,000	1,969,000	First week of July. Normal.	Condition of the crop is fair.
Faridpur ..	*183,000	189,000	100	102·7	*676,500	718,000	End of July. Normal.	Condition of standing crop is satisfactory.

*Revised.

District.	Estimated area under jute, in acres.		Estimated outturn as a percentage of the normal yield per unit of area.		Estimated total yield, in bales of 400 lbs.		Date by which harvesting generally commenced and whether that date was early, normal or late.	Remarks by District Officers.
	Last year.	This year.	Last year.	This year.	Last year.	This year.		
1	2	3	4	5	6	7	8	9
	Acres.	Acres.			Bales.	Bales.		
Bakarganj ..	38,000*	39,000	97·30	90	137,000*	130,000	July. Normal ..	Drought after sowing and excessive rain subsequently affected the crop.
Chittagong ..	300	300	90	90	1,000	1,000	July. Normal ..	Weather unfavourable.
Tippera ..	200,000	225,000	81	100	600,000	833,000	August. Late ..	Crop satisfactory.
Noakhali ..	36,000	45,000	82·70	100·3	110,000	167,000	Middle of July. Normal.	Heavy rain in May and June affected growth.
Total for Bengal ..	1,898,800	2,154,800	..	..	6,485,500	7,693,500		
Cooch Behar ..	17,500	24,500	81·71	90	50,000	77,000	Middle of July. Normal.	Increase due to favourable weather conditions.
Tripura State ..	1,200	1,500	56·22	72·16	2,500	4,000	Not yet commenced	Condition of crop is fair.
Grand Total ..	1,917,500*	2,180,800	..	..	6,538,000*	7,774,500		

*Revised.

APPENDIX II.

Statement showing the rainfall (in inches) in July and August each year from 1933 to 1936.

District.	Rainfall in July.					Rainfall in August.				
	1933.	1934.	1935.	1936.	Normal.	1933.	1934.	1935.	1936.	Normal.
	Inches.	Inches.	Inches.	Inches.	Inches.	Inches.	Inches.	Inches.	Inches.	Inches.
24-Parganas	22·49	7·80	9 33	12·76	13·06	16·22	13·73	10·98	10·13	12 63
Nadia	10 44	8 61	8·86	11 98	9·97	16·21	8 08	13 48	9·37	10 19
Murshidabad	10·11	6·36	7·30	15·47	10·81	20·19	5·79	13·70	7·98	11·16
Jessore	14 28	10·91	12 42	12·16	11 08	20 88	5 93	10 69	7 91	10·75
Khulna . ..	16·57	10·59	11·15	14·52	14·77	17·12	9·38	15·62	10·63	13·12
Burdwan	9·64	8·00	7·57	13 42	11·00	16·46	8·05	13 07	10·39	11·52
Midnapore	18·30	7 84	11·67	10·96	11·54	16·61	12·53	9·32	11·07	11·42
Hooghly	12·06	6·73	8·35	11·88	11·84	15 13	8·16	8·91	7·44	11·41
Howrah	16·84	9·22	9 28	11·95	12·50	14·89	13·40	11 84	6·31	12·18
Rajshahi	8·77	7·35	7·39	13·66	11·62	26·24	6·38	12·01	6·80	10·75
Dinajpur	16·28	19 32	10·76	18 74	16·21	12·66	11·63	30·42	11·92	14 62
Jalpaiguri	33·77	36·08	16·91	31·15	34·81	24·19	20·73	44·23	30·38	28·23
Darjeeling	27·40	26·86	27·65	21 08	31·45	25·91	25·42	32·15	24·03	25 84
Rangpur	12·16	19·39	7·96	26·23	15·25	17·77	8·15	32·35	12·51	13·48
Bogra	10·77	10·79	8·40	16·76	12·07	18·98	9·80	18 51	9·18	11 51
Pabna	12·06	10 05	8 63	13·68	10·57	26·33	9·48	15 45	12·86	11 23
Malda	13·16	12·01	7·73	18·96	12·10	16·83	8 15	22·84	9·41	11 58
Dacca	16·52	12·76	7·54	16·31	13 27	19·36	9 26	18·71	13·81	12 78
Mymensingh	14·23	15·41	11·50	24·20	16·70	21·87	8·37	22 26	12·51	17·09
Faridpur	16·11	10·48	8·21	10·92	12 85	19·47	7·59	16 06	12·67	12·98
Bakarganj	28 52	17·16	15·12	19·14	18·41	25·00	17·83	22·68	14·56	16·61
Chittagong	18·81	38 58	16 39	27·55	26·42	35·38	15·06	27·03	20 ·33	23·18
Tippera	12·85	10·45	7·75	22·94	13·75	24·15	13 99	18·52	14·14	14·90
Noakhali	13·52	22·70	15·06	25·01	23·55	26 46	20·37	22·93	19 65	23·48
Cooch Behar	28·42	39·92	12·14	32 21	25 46	21·83	21 05	37·67	18·80	21 28
Tripura State	10·47	17·58	4·01	27·51	12·10	25·61	12·84	16·84	14·49	11·79

Note.—The figures given above are the averages for all the rain-registering stations in each district.

DEPARTMENT OF AGRICULTURE, BIHAR.

Final Forecast of the Jute Crop of Bihar, 1936.

[NOTE.—**On an average of the five years ending 1934-35, the area under jute, to which the Bihar forecast relates, represents about 6·7 per cent. of the total area under jute in British India.**]

Acreage.—The final district returns of the six jute-growing districts of the province show an area under jute of 211,000 acres. Last year's estimate of the area under the crop was 128,400 acres.

Weather conditions.—In March light rain fell in all the jute districts. The fall was below the normal. In April light rain fell in all the jute districts. The fall was below the normal everywhere. In May rain fell in all the jute districts. The fall was above the normal everywhere. In June rain fell in all the jute districts. The fall was below the normal everywhere except Champaran and Muzaffarpur. In July rain fell in all the jute districts. The fall was above the normal everywhere except Bhagalpur and Purnea where it was slightly below the normal. In August rain fell in all the jute districts. The weather conditions are reported to have been favourable in the most important jute district of Purnea and also in other districts.

Outturn.—In the important jute district of Purnea the outturn of the crop has been estimated at 70 per cent. of the normal. Champaran reports 95 per cent., Muzaffarpur, Darbhanga, Bhagalpur and the Santal Parganas report 81, 33, 68 and 65 per cent., respectively.

I estimate that the outturn this year will be 70 per cent. of the normal. Recent enquiries about the normal outturn per acre show that the normal outturn per acre is $3\frac{1}{3}$ bales, and on this basis the gross outturn on 211,000 acres estimated to be under jute in this province comes to 495,000 bales against 319,300 bales (revised) last year. Adding 25,000 bales, the estimated imports from Nepal, the forecast figure for Bihar comes to 520,000 bales.

D. R. SETHI,
Director of Agriculture, Bihar.

PATNA:
The 18th August 1936.

APPENDIX I.

Final Forecast of the Jute Crop of Bihar for 1936.

Division.	District.	Total area of the district.	Estimated total area under cultivation	Estimated normal area under jute on the basis of last 10 years' acreage.	Estimated area under jute.		Estimated outturn as a percentage of normal yield per unit of acre.		Estimated total yield.		Date by which harvesting generally commenced and whether that date was early, normal or late.	Remarks by District Officers.
					Last year, 1935.	This year, 1936	Last year, 1935.	This year, 1936	Last year, 1935.	This year 1936		
1	2	3	4	5	6	7	8	9	10	11	12	13
		Acres	Acres.	Acres	Acres	Acres.			Bales.	Bales		
Tirhut ..	Champaran ..	2,263,194	1,430,200	3,200	2,300	2,325	95	95	7,293	7,362	Middle of August but not yet in Bettiah subdivision.	The weather and rainfall have been favourable There is no change in area. The outturn is expected to be normal.
	Muzaffarpur ..	1,934,630	1,627,000	3,500	4,240	4,120	83	81	11,730	11,124	Not yet begun ..	The condition of the crop is good. Weather and rainfall have been seasonable.
	Darbhanga ..	2,142,720	1,677,500	1,600	810	880	30	33	810	418	By the middle of September.	The weather has been favourable The increase in area and yield is due to favourable weather.
Bhagalpur ..	Bhagalpur ..	2,661,314	1,684,100	3,400	3,519	3,659	35	68	4,105	8,204	Normal ..	The area sown this year is slightly large than that of last year due to timely rainfall and favourable weather.
	Purnea ..	3,143 635	1,694,400	154,400	117,574	200,000	40	70	158,765	466,700	Middle of July. Normal.	The weather and rainfall have been favourable. The increase in area is due to the inclination of the people to grow more jute in the hope of a better market.
	Santal Parganas ..	3,512 665	1,717,900	900	500	500	65	65	1,083	1,083	Not yet begun but expected to be normal.	The weather and rainfall have been favourable. Condition of the crop is good.
	Total ..	15,658,658	9,931,400	167,000	128,443 or in round numbers 128,000	210,984 or in round numbers 211,000	42	70	181,276*	494,981 or in round numbers 495,000		

*Revised to 319 300.

APPENDIX II.

Abstract statement of estimated acreage and outturn of the jute crop, 1936.

Province.	Acreage.							Outturn in bales of 400 lbs.								
	Of current year's crop.	Of previous year's crop.	Average of five preceding years (viz., 1930—1934).	Average of ten preceding years (viz., 1925—1934).	Percentage by which column 2 exceeds (+) or falls short of (—) area in—			Estimated yield of current year.	Yield of previous year.		Average of five preceding years (viz., 1930—1934).	Average of ten preceding years (viz., 1925—1934).	Percentage by which column 9 exceeds (+) or falls short of (—) outturn in—			
					Column 3.	Column 4.	Column 5.		Crop forecast.	Trade statistics.			Column 10.	Column 11.	Column 12.	Column 13.
1	2	3	4	5	6	7	8	9	10	11	12	13	14	15	16	17
Bihar ..	211,000*	128,400	165,600	201,900	+64·33	+27·42	+4·51	520,000†	344,300 *†	..	412,100	503,500	+51	..	+26	+3·28

* Revised. † Including Nepal.

APPENDIX III.

Name of district.	Rainfall in July.				Rainfall in August.				Normal rainfall.	
	1933.	1934.	1935.	1936.	1933.	1934.	1935.	1936.*	July.	August.
1	2	3	4	5	6	7	8	9	10	11
	Inches.	Inches.	Inches.	Inches.	Inches.	Inches.	Inches.	Inches.	Inches.	Inches.
Champaran	24·60	24·24	10·61	16·59	14·28	9·03	15·34	4·10	14·47	13·85
Muzaffarpur	23·94	15·87	6·97	12·41	13·94	6·13	12·96	8·82	11·77	11·89
Darbhanga	18·47	17·05	7·04	13·36	18·45	9·38	16·27	12·71	12·22	12·55
Bhagalpur	13·76	15·23	5·04	10·58	11·89	6·35	19·53	6·09	12·24	11·71
Purnea	16·87	21·48	7·15	16·88	13·01	12·50	26·64	8·42	16·90	14·97
Santal Parganas	12·43	11·24	6·30	12·79	17·08	10·99	19·47	7·38	12·69	12·00

*Figures relate to headquarters stations only up to 17th August.

DEPARTMENT OF AGRICULTURE, ORISSA.

Final Forecast of the Jute Crop of Orissa, 1936.

[NOTE.—**On an average of the five years ending 1934-35, the area under jute, to which the Orissa forecast relates, represents about 0·8 per cent. of the total area under jute in British India.**]

Acreage.—The final district returns of the two jute-growing districts of the province show an area under jute of 13,500 acres. Last year's estimate of the area under the crop was 17,200 acres.

Weather conditions.—In March light rain fell in Cuttack and Balasore. The fall was below normal. In April also light rain fell in both the districts. In May and June heavy rain fell in Cuttack and Balasore. In July, rainfall was below normal in Cuttack and above normal in Balasore. The weather conditions are reported to have been not favourable. The present condition of the crop is fair in Balasore district.

Outturn.—The outturn of the crop has been estimated at 65 and 50 per cent. of the normal in Cuttack and Balasore districts, respectively.

According to the estimates of the District Officers, the outturn of the crop this year will not be less than 64 per cent. of the normal. On the basis of 3½ bales. as the normal outturn per acre, the gross outturn on 13,500 acres estimated to be under jute in this province comes to 28,800 bales against 44,700 bales of last year.

R. P. WARD,

Revenue Commissioner, Orissa.
(Director of Agriculture.)

CUTTACK :

The 19th August 1936.

APPENDIX I.

Final Forecast of the Jute Crop of Orissa, 1936.

Province.	District.	Total area of the district.	Estimated total area under cultivation.	Estimated normal area under jute on the basis of last 10 years' acreage.	Estimated area under jute.		Estimated outturn as a percentage of normal yield per unit of acre.		Estimated total yield.		Date by which harvesting generally commenced and whether the date was early, normal or late.	Remarks by District Officers.
					Last year, 1935.	This year, 1936.	Last year, 1935.	This year, 1936.	Last year, 1935.	This year, 1936.		
1	2	3	4	5	6	7	8	9	10	11	12	13
		Acres.	Acres.	Acres.	Acres.	Acres.			Bales.	Bales.		
Orissa ..	Cuttack ..	2,015,756	1,395,800	15,000	15,400	12,600	80	65	41,066	27,300	Harvesting will commence by the 3rd week of August. In Angul subdivision harvesting will commence in the middle of October.	*See footnote.
	Balasore ..	1,334,400	932,200	2,500	1,800	900	60	50	3,600	1,500	Harvesting has not yet begun.	The present condition is fair.
	Total ..	4,250,156	2,328,000	17,500	17,200	13,500	78	64	44,666 or in round numbers 44,700	28,800		

*Decrease in area and outturn is due to the fact that since the sowing of the crop there has been continuous and heavy rainfall which affected the crop. Consequently some jute lands were converted into paddy lands.

APPENDIX II.

Abstract statement of estimated acreage and outturn of the Jute Crop, 1936.

Province.	Acreage.										Outturn in bales of 400 lbs.					
	Of current year's crop.	Of previous year's crop.	Average of five preceding years (viz. 1930-1934).	Average of ten preceding years (viz. 1925-1934).	Percentage by which column 2 exceeds (+) or falls short of (−) area in—			Estimated yield of current year.	Yield of previous year.		Average of five preceding years (viz. 1930-1934.)	Average of ten preceding years (viz. 1925-1934.)	Percentage by which column 9 exceeds (+) or falls short of (−) outturn in—			
					Column 3.	Column 4.	Column 5.		Crop forecast.	Trade statistics.			Column 10.	Column 11.	Column 12.	Column 13.
1	2	3	4	5	6	7	8	9	10	11	12	13	14	15	16	17
Orissa ..	13,500	17,200	19,300	19,000	−22	30	−29	28,800	44,700	..	49,000	50,800	−36	..	−41	−43

APPENDIX III.

Name of district	Rainfall in July.				Rainfall in August.				Normal rainfall.	
	1933.	1934.	1935.	1936.	1933.	1934.	1935.	1936.*	July.	August.
1	2	3	4	5	6	7	8	9	10	11
Cuttack	16·27	10·99	25·57	11·43	20·80	17·86	6·25	3·83	12·29	12·08
Balasore	17·86	10·14	17·89	12·00	16·65	17·40	6·91	2·37	11·18	11·51

*Figures relate to headquarters stations only up to 17th August.

DEPARTMENT OF AGRICULTURE, ASSAM.

Final Forecast of the Jute Crop of Assam, 1936.

[NOTE.—**On the average of the five years ending 1934-35, the area under jute in Assam represents some 5·9 per cent. of the total area under jute in British India.**]

Season.—After the issue of the Preliminary Forecast the condition of weather continued to be generally favourable for the crop. There were occasional heavy rains and local floods in some districts which affected the crop, specially in the low lying areas. On the whole, the condition of the crop is satisfactory and a better outturn than last year is expected.

Area.—The area has been estimated by the Deputy Commissioners to be 140,300 as compared with last year's actual area of 117,800 acres, and this year's preliminary forecast of 128,000 acres. The areas reported in the Preliminary Forecast have been revised in six districts.

Outturn.—The outturn per acre has been estimated to be 84 per cent. of the normal against 76 per cent. (revised) of last year. Taking 3·5 bales of 400 lbs. each of jute fibre as the normal yield per acre, the total produce of the province this year amounts to 412,500 bales against 312,600 bales (revised) of last year, or an increase of about 32 per cent.

J. N. CHAKRAVARTY,
Director of Agriculture, Assam.

SHILLONG:
The 18th August 1936.

APPENDIX I.

Final Forecast of the Jute Crop of Assam, 1936.

District.	Estimated normal area under jute.	Estimated area under jute.		Estimated outturn as a percentage of the normal yield per unit of area.		Estimated total yield in bales of 400 lbs. each.		Date by which the harvesting of the crop was commenced this year and whether that date was early, normal or late.	Remarks by the Deputy Commissioners.
		Last year (actual).	This year.	Last year.*	This year.	Last year.*	This year.		
1	2	3	4	5	6	7	8	9	10
	Acres.	Acres.	Acres.			Bales.	Bales.		
Cachar (Plains)	200	200	200	78	84	500	600	Middle of August. Early.	The weather from June to August was generally favourable for the crop although flood caused a little damage in low lying areas. This accounts for the low outturn.
Sylhet ..	15,000	10,700	13,300	60	85	22,500	39,600	Middle of July. Early.	Increase in area is due to favourable weather at sowing time. Heavy rain in April and subsequent flood in June caused some damage to the crop and hence the low estimated outturn.
Goalpara ..	60,000	29,400	44,000	70	85	72,000	130,900	Last week of June. Early.	The area was underestimated in the preliminary forecast. The weather was generally favourable for the crop but some damage was done by flood in low lying areas.
Kamrup ..	28,000	21,200	25,900	70	75	59,300	66,400	First week of August. Normal.	The increase in area is due to favourable weather at sowing time. The weather from June to August was generally seasonable, in spite of the fact that there was a flood in June, which affected the crop to some extent. This is the cause of low estimated outturn.
Darrang ..	12,600	8,700	8,500	75	85	22,800	25,800	Last week of July. Normal.	The weather condition was rather dry in June but improved later on. The growth of the crop was hindered to some extent by heavy rain in the later part of the season, which caused the outturn to fall below the normal.
Nowgong ..	50,000	40,200	44,300	90	90	126,600	139,500	Middle of July. Normal.	The increase in area is due to rise in the price of jute last year. The weather was favourable for the crop and a good crop is anticipated.
Sibsagar ..	400	400	400	80	90	1,100	1,300	1st week of August Normal.	The weather condition was rather normal throughout the year for the crop and a better outturn than last year is expected.
Lakhimpur ..	1,000	300	400	85	90	900	1,300	First week of August. Early.	The weather from June to August was generally favourable for the crop and a good outturn is anticipated.
Garo Hills (Plains).	5,000	3,700	3,900	53	56	6,900	7,800	Middle of July. Normal.	The weather was not so favourable for the crop, and hence the low outturn.
Total ..	172,200	117,800	140,300	76	84	312,600	412,500		

*On the basis of actual area.

APPENDIX II.

Abstract statement of estimated acreage and outturn of the Jute Crop of Assam, 1936.

Province.	Acreage.							Outturn in bales of 400 lbs. each.						
	Of current year's crop.	Of previous year's crop.	Average of five preceding years (viz., 1930—1934).	Average of ten preceding years (viz., 1925—1934).	Percentage by which column 2 exceeds (+) or falls short of (−) area in—.			Estimated yield of current year.	Yield of previous year according to crop statistics.	Average yield of five preceding years (viz., 1930—1934).	Average yield of ten preceding years (viz., 1925—1934).	Percentage by which column 9 exceeds (+) or falls short of (−) outturn in—		
					Column 3.	Column 4.	Column 5.					Column 10.	Column 11.	Column 12.
1	2	3	4	5	6	7	8	9	10	11	12	13	14	15
Assam ..	140,300	117,800*	143,800	147,100	+19	−2	−5	412,500	312,600*	381,200	372,700	+32	+8	+11

*On the basis of the actual area.

APPENDIX III.

Statement of Rainfall in July and August, 1933-36.

District.	Rainfall in July.				Rainfall in August			
	1933.	1934.	1935.	1936.	1933.	1934.	1935.	1936.*
1	2	3	4	5	6	7	8	9
	Inches.	Inches.	Inches.	Inches.	Inches.	Inches.	Inches.	Inches.
Cachar	20 46	23 47	19·23	21·72	25·45	22·52	23·52	1·45
Sylhet	28 72	27·39	12·01	24·01	27·54	19·53	30·14	3·89
Goalpara	14·23	23·41	12·69	18·18	16·16	11·89	29·74	2·17
Kamrup	12·84	17·97	13·12	15·73	14·45	15 42	15 93	2·52
Darrang	13 29	15·88	14·16	17·36	11 09	8·52	17·35	3·80
Nowgong	14·64	15·73	13·48	13·56	15 40	10·84	14·66	4·22
Sibsagar	15 56	16·44	18 52	18·88	15·25	15·20	14 15	4·00
Lakhimpur	21 74	26 20	20·98	28·88	20·27	16·37	18·27	3·64
Garo Hills (Plains)	19 30	26 09	15·68	32 81	37 75	9·52	28 91	2·26

*The figures for August are only approximate and represent rainfall up to 16th only, being taken from the weekly eather and crop reports.

DISTRICT REPORTS ON WEATHER AND CROPS.

For the week ending on the 2nd September 1936.

Summary.—Excepting light showers in places the rainfall was generally moderate to heavy. Transplantation of winter paddy is advanced, weeding continues. Reaping of autumn crops is in brisk progress. Prospects of standing crops are generally satisfactory. During the week ending Saturday, the 29th August, 1,049 and 4,925 persons received gratuitous relief in Nadia and Murshidabad, respectively. In Burdwan, daily average of persons receiving gratuitous relief was 8,190 during the week ending Saturday, the 29th idem. The average price of common rice for the province has risen by about 0·35 per cent. as compared with that of the previous week.

Serial No.	District and sub-division.	Rainfall.	Price of common rice, in seers, per rupee.		Character of the weather, condition of crops, etc.
			This week.	Previous week.	
1	2	3	4	5	6
		Inches.			
1	24-Parganas ..	1·36	9½	9⅝	Weather seasonable. Condition of standing crops is favourable. Fodder and water are sufficient. No import or export of paddy except in Basirhat where import of paddy from East Bengal continues. Agricultural loans also gratuitous relief were distributed in Sadar, Basirhat and Diamond Harbour.
	Diamond Harbour..	0·42	9¾	9¾	
	Barrackpore ..	1·61	8½	8½	
	Baraset ..	1·80	9	9	
	Basirhat ..	1·04	11	11	
2	Nadia ..	3·74	8½	8½	Weather seasonable. Fodder and water are sufficient except in Bheramara and Daulatpur thanas. Crops are damaged to some extent by flood in all subdivisions except in Ranaghat. Flood-water is gradually subsiding. No agricultural loan distributed during the week. Gratuitous relief was given to 8 persons in Sadar and 1,041 persons in Chuadanga for the week ending 29th August. Harvesting of jute not yet commenced except in Kushtia sub-division.
	Kushtia ..	2·40	9	9	
	Meherpur ..	2·18	11	11	
	Chuadanga ..	2·78	11	11	
	Ranaghat ..	1·14	9½	9½	
3	Murshidabad ..	6·88	9¾	10	Weather seasonable. Prospects of standing crops are favourable. Fodder and water are sufficient. No large import or export. Cattle-disease is reported from Jangipur subdivision. Number of persons receiving gratuitous relief in the distressed areas for the week ending Saturday, the 29th August, was 277, 3,116 and 1,532 in Lalbagh, Kandi and Jangipur subdivisions, respectively. Flood is abating very slowly and relief is being given to the flood-stricken people of police-stations Domkal, Berhampur Town, Jellangi and Beldanga of Sadar sub-division.
	Lalbagh ..	4·60	10	10	
	Jangipur ..	0·55	10	10	
	Kandi ..	2·69	11	10	
4	Jessore ..	1·91	11½	11½	Weather seasonable. Prospects of standing crops are fair. Harvesting of *aus* paddy is in progress. No large export or import. Fodder and water are sufficient.
	Jhenidah ..	3·02	12	12	
	Magura ..	1·55	13	13	
	Narail ..	1·15	11	11	
	Bongaon ..	1·47	10	10	
5	Khulna ..	1·94	10	10	Weather seasonable. Fodder and water are sufficient. Test relief works suspended.
	Satkhira ..	1·23	10½	10½	
	Bagerhat ..	0·61	8½	8½	

Serial No.	District and sub-division.	Rainfall.	Price of common rice, in seers, per rupee.		Character of the weather, condition of crops, etc.
			This week.	Previous week.	
1	2	3	4	5	6
		Inches.			
6	Burdwan ..	4·73	9	9	Weather seasonable. Condition of crop is favourable. Fodder is sufficient. 8,190 persons daily on average received gratuitous relief during the week ending 29th August 1936.
	Asansol ..	1·02	11	11	
	Katwa ..	1·56	9	9	
	Kalna ..	1·09	8½	8½	
7	Birbhum ..	1·76	10½	10	Weather seasonable and cloudy. Prospects of standing crops are good. Fodder and water are sufficient.
	Rampurhat ..	4·77	10½	10½	
8	Bankura ..	3·41	10	10	Weather seasonable. Transplantation of paddy seedlings is completed. Weeding continues. Prospects of standing crops are good. Fodder and water are sufficient. Cattle-disease is reported from Patrasayer thana.
	Vishnupur .	4·31	10	9½	
9	Midnapore ..	1·24	10	10	Transplantation of winter paddy is over. Condition of standing crops is fair. Fodder and water are sufficient.
	Contai ..	1·93	10	10	
	Tamluk ..	2·58	8½	8½	
	Ghatal ..	0·71	10½	10½	
	Jhargram ..	0·74	10½	10½	
10	Hooghly ..	3·08	9	9½	Weather seasonable. Fodder and water are sufficient. Harvesting of jute continues
	Serampore ..	1·28	9	9	
	Arambagh ..	3·01	9½	9½	
11	Howrah ..	1·23	10	10	Weather cloudy. Transplantation of winter paddy is almost over. Fodder and water are sufficient. Harvesting of jute has commenced at places.
	Uluberia ..	2·06	9½	9½	
12	Rajshahi (Rampur-Boalia).	3·00	9½	9½	Weather seasonable Condition of the standing crops appears to be fair. Some damages have been caused to the standing crops by the recent flood. Water is sufficient though fodder difficulty is being felt in the flooded area.
	Naogaon ..	2·86	10½	10½	
	Nator ..	0·46	9½	9½	
13	Dinajpur ..	3·11	10	10	Fodder and water are sufficient. Cattle-disease is reported from Birganj thana.
	Thakurgaon ..	6·70	10	10	
	Balurghat ..	5·39	11	11	
14	Jalpaiguri ..	11·73	11	11	Weather seasonable. Condition and prospects of standing crops are favourable. Harvesting of jute continues. Fodder and water are sufficient. Cattle-disease still prevails in Alipur Duar.
	Alipur ..	9·14	9	9	

Serial No.	District and sub-division.	Rainfall.	Price of common rice, in seers, per rupee.		Character of the weather, condition of crops, etc.
			This week.	Previous week.	
1	2	3	4	5	6
		Inches.			
15	Darjeeling ..	4·53	8	8	Weather favourable. Transplantation of paddy is in progress. *Bhuta* and potatoes are being harvested. Fodder and water are sufficient.
	Kurseong ..	5·56	8	8	
	Siliguri ..	6·96	9¼	9¼	
	Kalimpong ..	2·66	7	7	
16	Rangpur ..	1·65	10½	10	Weather seasonable. More rain is needed. Prospects of standing crops are fair. No large export or import. Fodder and water are sufficient.
	Nilphamari ..	4·32	10½	10½	
	Kurigram ..	2·75	9½	9½	
	Gaibandha ..	5·14	9	9	
17	Bogra ..	6·12	10½	10½	Agricultural operation not affected by weather condition. Transplantation of aman paddy and harvesting of jute continue. Growth of standing crops is fair. No damage.
18	Pabna ..	2·75	10	10	Weather seasonable. Condition of standing crops is favourable. Steeping of jute continues. Flood water is subsiding. Fodder and water are sufficient.
	Serajganj ..	1·25	11½	11½	
19	Malda ..	8·65	10½	11	Weather cloudy and rainy. Prospects of standing crops are fair. Fodder and water are available. Cattle-disease is reported from Nawabganj police-station.
20	Cooch Behar ..	7·55	12 1/16	12 1/16	Weather seasonable. Preparation of lands for winter paddy and transplantation of seedlings continue. Harvesting of autumn paddy finished, outturn fair. Preparation of lands for tobacco seedlings has commenced in places. Cutting, steeping and washing of jute continuing. Prospects and condition of standing crops fair. Fodder and water sufficient. Cattle-disease is reported from Dinhatta, Tufanganj and Sadar subdivisions.
21	Dacca ..	1·62	11	11½	Rainfall at North Sadar (Kapasia) 3·75. Weather seasonable and its effects on the agricultural operations are fair. No large export and import. Prospects of crops appear to be fair. Fodder and water are sufficient. Cattle-disease reported from some places in Munshiganj and Narayanganj subdivisions.
	Manikganj ..	0·36	10½	11½	
	Narayanganj ..	1·44	12	12	
	Munshiganj ..	1·05	10	10	

Serial No.	District and sub-division.	Rainfall.	Price of common rice, in seers, per rupee.		Character of the weather, condition of crops, etc.
			This week.	Previous week.	
1	2	3	4	5	6
		Inches.			
22	Mymensingh ..	4·07	10	10	Weather seasonable. Harvesting continues. Condition of crops is fair. Fodder and water are available.
	Jamalpur ..	2·01	10½	10½	
	Tangail ..	0·79	10	10	
	Netrakona ..	4·47	12½	11½	
	Kishorganj ..	2·71	10 11/16	10½	
23	Faridpur ..	4·87	11	11½	Weather seasonable. Condition of standing crops is fair. Fodder and water are sufficient.
	Goalundo (Rajbari)	2·07	11	11	
	Madaripur ..	1·21	11	11	
	Gopalganj (*a*) ..	0·49	10½	10½	
24	Bakarganj (Barisal)	2·39	10½	10½	Weather seasonable. Prospects of standing crops are not bad in Sadar, fair in Perojpur and Patuakhali and good in Bhola. Fodder and water are sufficient.
	Pirojpur ..	1·73	10½	10½	
	Patuakhali ..	1·90	10½	10½	
	Dakshin Shabazpur (Bhola).	0·59	10	10	
25	Chittagong ..	2·44	10 11*	10 11*	Weather seasonable. Condition of standing crops is fair. Fodder and water are sufficient. Panga salt sells at 14 seers at Sadar.
	Cox's Bazar ..	(*n*)	(*n*)	10	
26	Tippera (Comilla) ..	2·38	10	10	Weather fair.
	Brahmanbaria ..	1·61	10½	10½	
	Chandpur ..	3·66	10½	11½	
27	Noakhali ..	9·33	10	10	Heavy rainfall has bad effect on the sowing of *amon* paddy. Fodder and water are sufficient. Cattle-disease is reported from Feni.
	Feni ..	5·78	10½	10½	
28	Chittagong Hill Tracts.	5·45	13	12	Weather seasonable. Its effects are favourable. Cattle-disease still prevails. Fodder and water are sufficient.
29	Tripura State ..	2·69	13	10½	Weather seasonable. Fodder and water are sufficient. Cattle-disease exists in Belonia and Sabroom Divisions. Cotton sells at Rs. 9 to Rs. 12-8 and jute at Rs. 3 to Rs. 5 per maund.

(*a*) The rainfall at Haridaspur, which is very near to Gopalganj, is shown here.

* Burma rice (*n*) Not reported.

S. ABDULLAH, for *Director of Agriculture, Bengal.*

Dacca, the 7th September 1936.

Wholesale prices current of food grains, gur, etc., in the undermentioned marts of Bengal for the second half of August 1936.

Marts.	Paddy local (best quality).			Paddy local (common quality).			Rice local (best quality).		
	Present return.	Next preceding return.	Corresponding return of last year.	Present return.	Next preceding return.	Corresponding return of last year.	Present return.	Next preceding return.	Corresponding return of last year.
1	2	3	4	5	6	7	8	9	10
	Rs. a. p.	Rs. a. p.	Rs. a. p.	Rs. a. p.	Rs. a. p.	Rs. a. p.	Rs. a. p.	Rs. a. p.	Rs. a. p.
Calcutta	3 0 0	3 0 0	2 10 0	2 12 0	2 10 0	2 8 0	5 8 0	5 8 0	5 12 0
Burdwan	2 8 0	2 8 0	2 3 0	2 6 0	2 6 0	2 1 0	4 10 0	4 10 0	4 12 0
Midnapore	2 8 0	2 8 0	2 2 0	2 2 0	2 2 0	1 14 0	4 12 0	4 12 0	4 4 0
Chittagong	1 13 0	1 11 0	1 14 0	1 12 0	1 13 0	1 12 0	4 10 0	4 10 0	4 14 0
Dacca	2 8 0	2 8 0	2 6 0	2 4 0	2 4 0	2 2 0	4 2 0	4 0 0	4 0 0
Pabna	2 8 0	2 6 0	2 6 0	2 0 0	1 12 0	2 1 0	5 0 0	5 0 0	4 12 0
Rangpur	2 2 0	2 2 0	2 0 0	1 14 0	1 14 0	1 14 0	5 4 0	5 4 0	5 8 0
Serajganj (Pabna)	..	..	..	..	..	..	..	..	..
Sariabari (Mymensingh) ..	..	..	..	..	..	..	..	..	..
Narayanganj (Dacca)	..	..	..	..	..	..	..	..	..

Marts.	Rice local (common quality).			Wheat.			Raw cotton.		
	Present return.	Next preceding return.	Corresponding return of last year.	Present return.	Next preceding return.	Corresponding return of last year.	Present return.	Next preceding return.	Corresponding return of last year.
	11	12	13	14	15	16	17	18	19
	Rs. a. p.	Rs. a. p.	Rs. a. p.	Rs. a. p.	Rs. a. p.	Rs. a. p.	Rs. a. p.	Rs. a. p.	Rs. a. p.
Calcutta	5 0 0	5 0 0	4 8 0	3 10 0	3 11 0	3 4 0	20 12 0	21 4 0	15 12 0
Burdwan	4 4 0	4 4 0	3 12 0	..	..	..	..	..	..
Midnapore	3 12 0	3 12 0	3 5 6	..	..	..	..	..	..
Chittagong	3 12 0	3 12 0	3 10 0	..	..	..	..	..	..
Dacca	3 0 0	3 5 0	3 6 0	..	..	..	..	..	..
Pabna	4 4 0	4 6 0	3 10 0	..	..	..	..	..	..
Rangpur	4 6 0	4 6 0	4 2 0	..	..	..	..	..	..
Serajganj (Pabna)	..	..	..	..	..	..	..	..	..
Sariabari (Mymensingh) ..	..	..	..	..	..	..	..	..	..
Narayanganj (Dacca)	..	..	..	..	..	..	..	..	..

Marts.	Coal.			Raw Jute (weighted average).			*Gur* (sugarcane).		
	Present Return.	Next preceding return.	Corresponding return of last year.	Present return.	Next preceding return.	Corresponding return of last year	Present return.	Next preceding return.	Corresponding return of last year.
	20	21	22	23	24	25	26	27	28
	Rs. a. p.	Rs. a. p.	Rs. a. p.	Rs. a. p.	Rs. a. p.	Rs. a. p.	Rs. a. p.	Rs. a. p.	Rs. a. p.
Calcutta	0 6 6	0 6 6	0 6 6	5 0 0	5 0 0	5 0 0	3 8 0	3 8 0	4 10 0
Burdwan	..	..	..	..	..	..	4 6 0	4 6 0	4 4 0
Midnapore	..	..	..	..	..	..	4 0 0	4 0 0	4 8 0
Chittagong	..	..	..	..	..	..	4 0 0	4 0 0	4 0 0
Dacca	..	..	..	..	..	..	3 12 0	3 12 0	5 8 0
Pabna	..	..	..	..	..	..	3 0 0	2 4 0	4 10 0
Rangpur	..	..	..	..	..	..	3 0 0 to 3 4 0	3 0 0 to 3 4 0	4 7 0 to 4 11 0
Sirajganj (Pabna)	..	..	..	(a) 4 2 0	(a) 4 2 0	4 15 0	..	..	..
Sariabari (Mymensingh) ..	..	..	..	(a) 3 10 0 to 5 14 0	(a) 3 10 0 to 6 0 0	3 0 0 to 6 11 0	..	..	..
Narayanganj (Dacca)	..	..	..	3 12 0 to 5 12 0	4 0 0 to 5 2 0	4 0 0 to 5 8 0	..	..	..

(a) New.

Dacca, the 5th September 1936.

S. ABDULLAH, for *Director of Agriculture, Bengal.*

Prices-current (retail) of common rice and salt in the districts of Bengal for the second half of August 1936.

Districts and Marts.	Quantity per rupee in seers of eighty tolas.								
	Common rice.						Salt.		
	Average.			Cheapest.					
	Present return.	Next preceding return.	Corresponding return of last year.	Present return.	Next preceding return.	Corresponding return of last year.	Present return.	Next preceding return.	Corresponding return of last year.
	S. Ch.	S. Ch.	S. Ch.	S. Ch.	S. Ch.	S. Ch.	S. Ch.	S. Ch.	S. Ch.
Presidency Division.									
24-Parganas—									
1 Chotla Hat ..	9 10	9 2	10 0	11 8	11 8	11 6	18 0C	19 6C	17 12
2 Mogra Hat ..	9 6	9 6	10 0	10 10	10 10	10 10	17 0C 15 0K	17 0C 16 0K	16 0
3 Calcutta-Beliaghata..	8 0	8 0	8 12	10 0	10 0	11 8	18 10C 17 10K 16 0P	18 10C 17 10K 16 0P	16 0
Nadia—									
4 Goari	8 8	8 8	8 7	11 12	11 12	10 0	14 0P 14 0K	14 0P 14 0K	14 0†
5 Ranaghat ..	9 8	9 8	9 0	11 12	11 12	12 0	14 0P 14 0K	14 0P 14 0K	14 0†
Murshidabad—									
6 Berhampore ..	9 8	9 8	9 8	10 0	10 0	10 0	14 0K	14 0K	14 0
7 Kandi	10 0	9 12	9 0	10 4	10 0	9 8	14 8K 14 8B	12 8K 12 8B	14 8
8 Jangipur ..	10 0	9 12	9 0	10 8	10 4	9 8	16 0K	16 0K	15 0
Jessore—									
9 Sadar	11 0	11 8	11 0	13 0	13 0	13 0	16 0P 16 0K	16 0P 15 0K	15 8†
10 Bongaon ..	10 0	10 0	9 8	12 8	12 8	12 0	14 8P 15 0K	14 8P 15 0K	14 8 13 0
Khulna—									
11 Sadar	10 0	10 0	10 8	12 0	13 0	11 0	16 0C 16 0K	16 0C 16 0K	14 0†
12 Bagerhat ..	8 8	8 8	9 8	10 0	10 0	10 0	15 0K	15 0K	14 0
Burdwan Division.									
Burdwan—									
13 Sadar	9 4	9 4	10 0	9 8	9 8	9 12	13 0C 13 0K	13 0C 13 0K	16 0†
14 Kalna	8 8	8 7	9 4	12 8 (R)	12 0 (R)	9 12	18 0K	18 0P	16 0
Birbhum —									
15 Suri	11 0	10 0	10 0	11 4	11 0	11 0	14 0M	14 0M	14 0
16 Rampurhat ..	10 0	10 8	9 0	11 0	11 0	9 8	16 0C	16 0C	16 0
Bankura—									
17 Sadar	10 0	10 0	10 0	11 8	11 0	10 8	14 0P	13 0P	14 0
18 Vishnupur ..	10 0	8 10	9 0	10 10	9 0	10 0	13 0P	13 0P	13 0

P—Panga. R—Rangoon rice. K—Karkach. B—Bombay. C—Crushed.

N B.—The prices of Karkach and Liverpool salt tally with each other in marts marked†.

M—Madras.

Prices-current (retail) of common rice and salt in the districts of Bengal for the second half of August 1936.

Districts and Marts.	Quantity per rupee in seers of eighty tolas.								
	Common rice.						Salt.		
	Average.			Cheapest.					
	Present return.	Next preceding return.	Corresponding return of last year.	Present return.	Next preceding return.	Corresponding return of last year.	Present return.	Next preceding return.	Corresponding return of last year.
	S. Ch.	S. Ch.	S. Ch.	S. Ch.	S. Ch.	S. Ch.	S. Ch.	S. Ch.	S. Ch.
Burdwan Division - *concld.*									
Midnapore									
19 Sadar	11 0	11 0	9 10	11 11	11 11	12 6	14 0L	14 0L	14 0
20 Contai	10 0	9 0	12 0	11 0	9 8	14 0	16 0C	15 0C	13 0
Hooghly—									
21 Sadar	9 0	9 8	10 0	10 8	11 8	10 8	15 0P	15 0P	14 8
22 Arambagh ..	9 8	9 8	11 0	10 0	10 0	11 8	15 4P 15 0K	15 0P 14 8K	15 8 15 0
Howrah									
23 Sadar ..	9 0	9 0	10 8	12 0	12 8	12 0	16 0C 16 0K	16 0C 16 0K	16 0
24 Uluberia ..	9 8	9 8	10 8	10 8	10 8	11 8	16 0C 13 0K	16 0C 13 4K	16 0
Rajshahi Division.									
Rajshahi -									
25 Rampur-Boalia ..	9 8	9 8	10 0	10 2	10 0	10 8	12 0C 12 0K	12 0C 12 0K	13 4†
26 Nator	9 12	9 12	10 8	11 4	10 8	11 4	12 0C 12 0K	12 0C 12 0K	12 0†
27 Dinajpur - Railbazar Hat.	9 0	9 0	10 13	10 12	10 12	12 0	10 0K	10 0K	13 8†
28 Jalpaiguri Sadar ..	9 0	9 0	12 0	10 0	10 8	10 8	13 0C	13 0C	13 0
Darjeeling -									
29 Sadar	9 0	9 0	9 0	9 0	9 0	10 0	10 8P 10 0K	10 8P 10 0K	10 8 9 0
30 Siliguri ..	9 10	9 8	11 0	10 4	10 0	12 0	12 0P 12 0K 12 0C	12 0P 12 0K 12 0C	12 0†
Rangpur									
31 Sadar	10 2	10 2	11 0	10 2	10 2	11 0	13 8P	13 8P	14 12
32 Nilphamari ..	10 8	10 12	10 8	11 12	11 14	13 0	12 8K	12 8K	12 8
33 Bogra Sadar ..	10 8	10 9	11 2	10 12	10 12	11 7	13 0C	12 0C	12 0
Pabna—									
34 Sadar	10 0	10 0	11 0	12 0	12 8	11 8	14 8L 14 8K	14 8L 14 8K	13 0 13 4
35 Serajganj ..	11 8	11 8	10 8	12 0	12 0	11 8	16 0L 15 0K	16 0L 15 0K	16 0 15 0
Malda —									
36 Sadar	10 8	10 8	10 12	11 12	11 12	11 0	14 8OK 13 0K	14 8OK 13 0K	14 8 14 0
37 Balia Nawabganj	10 13	11 0	11 1	11 8	12 8	11 8	15 8OK 15 0K	15 8OK 14 8K	15 0 14 8

P Panga. K - Karkach. C - Crushed. L - Liverpool.

N. B. The prices of Karkach and Liverpool salt tally with each other in marts marked †.

OK Okha and other Indian varieties.

Prices-current (retail) of common rice and salt in the districts of Bengal for the second half of August 1936.

Districts and Marts.	Quantity per rupee in seers of eighty tolas.								
	Common rice						Salt.		
	Average.			Cheapest.					
	Present return.	Next preceding return.	Corresponding return of last year.	Present return.	Next preceding return.	Corresponding return of last year.	Present return.	Next preceding return.	Corresponding return of last year.
	S. Ch.	S. Ch.	S. Ch.	S. Ch.	S. Ch.	S. Ch.	S. Ch.	S. Ch.	S. Ch.
Dacca Division.									
Dacca—									
38 Sadar	9 12	9 12	11 8	10 0	10 0	12 8	13 4C 13 0K	13 0C 13 4K	13 8†
39 Mirkadim ..	10 0	10 0	11 0	11 8	11 0	11 8	14 8K	14 8K	14 8
Mymensingh—									
40 Nasirabad ..	10 4	10 0	10 0	10 8	10 8	12 0	13 0L 12 0K	13 0L 12 0K	13 0
41 Netrakona ..	12 4	11 8	11 8	13 0	12 8	12 8	13 12L 13 4K	13 12L 12 8K	13 12 13 4
Faridpur—									
42 Sadar ..	11 0	11 8	10 8	12 0	12 8	13 0	12 0K	13 0K	12 0
43 Rajbari ..	11 0	11 0	10 0	13 0	13 0	12 0	12 0C	12 0C	12 0
Bakarganj—									
44 Barisal ..	10 0	10 8	10 8	11 8	11 0	12 8	14 8C 14 8K	14 8C 14 8K	14 12 13 4
45 Pirojpur ..	10 8	10 0	10 3	10 10	10 2	10 5	14 0C 14 0K	14 0C 14 0K	13 0†
Chittagong Division.									
Tippera—									
46 Comilla ..	9 8	9 8	10 0	13 5	13 5	13 5	14 8C	14 8C	12 13 10 10
47 Chandpur ..	10 4	10 1	10 4	11 5	11 4	11 0	14 8C	14 8C	13 5
Noakhali—									
48 Kalitara Hat ..	10 0	10 0	9 8	11 0	11 0	10 0	13 0C 10 8K	13 0C 10 8K	13 0 10 0
49 Feni Hat ..	10 12	10 12	10 12	14 0	14 0	12 8	14 0C 13 0K	14 0C 13 0K	15 0 10 0
Chittagong—									
50 Sadar	8 12	8 12	8 4	10 0	10 0	11 0	13 0P	13 0P	13 0
51 Cox's Bazar ..	10 0	9 8	8 0	11 8	11 0	9 8	13 0P	13 0P	13 0
52 Chittagong Hill Tracts —Rangamati ..	9 0	11 0	10 0	11 0	12 0	11 0	10 8L 7 0K	10 8L 7 0K	13 0 6 4

P—Panga. C—Crushed. K—Karkach. L—Liverpool.

N.B.—The prices of Karkach and Liverpool salt tally with each other in marts marked †.

Dacca, the 5th September 1936.

S. ABDULLAH, for *Director of Agriculture, Bengal.*

Statement showing the gauge readings at Dacca Waterworks Station on the river Buriganga for the week ending 22nd August 1936.

Date.	At highest water.		At lowest water.		Commencement of—		Remarks.	
	Time.	Reading.	Time.	Reading.	Ebb tide.	Flow tide.	7 a.m.	5 p.m.
1936.								
16th August ..	Tide is not perceptible						18·5	18·65
17th „ ..							18·75	18·9
18th „ ..							19·0	19·05
19th „ ..							19·15	19·2
20th „ ..							19·35	19·35
21st „ ..							19·35	19·3
22nd „ ..							19·3	19·25

Notable high and low water-levels of previous years.

		Taken at high tide.			Taken at low tide.
27th August	1906 ..	70·5	23rd February	1907 ..	51·06
5th September	1909 ..	66·86	13th „	1908 ..	51·06
10th August	1910 ..	69·86	12th March	1912 ..	51·06
1st „	1911 ..	68·46	6th „	1914 ..	50·60
13th „	1912 ..	67·16	22nd February	1915 ..	50·30
31st „	1915 ..	69·7	15th „	1916 ..	50·60
8th „	1916 ..	68·1	3rd March	1917 ..	51·0
12th „	1917 ..	67·1	21st February	1918 ..	51·40
13th „	1918 ..	69·12	26th „	1919 ..	50·4
2nd „	1919 ..	66·8	18th „	1920 ..	50·9
8th September	1920 ..	66·9	19th „	1921 ..	50·9
28th July	1921 ..	68·4	8th March	1922 ..	51·05
10th August	1922 ..	68·00	14th „	1923 ..	50·8
31st July	1923 ..	66·15	16th February	1924 ..	50·50
29th August	1924 ..	68·82	5th March	1925 ..	50·9
8th September	1925 ..	68·52	9th February	1926 ..	2·2
15th August	1926 ..	19·6	27th „	1927 ..	2·10
17th September	1927 ..	18·70	16th „	1928 ..	2·2
22nd August	1928 ..	20·0	21st „	1929 ..	2·0
13th July	1929 ..	17·8	24th „	1930 ..	2·3
12th September	1930 ..	18·65	28th „	1931 ..	2·2
16th August	1931 ..	21·7	18th „	1932 ..	1·8
6th September	1932 ..	18·5	6th „	1933 ..	2·10
7th „	1933 ..	17·80	26th March	1934 ..	2·40
23rd August	1934 ..	19·35			

N.B.—Zero of the gauge at Dacca Waterworks prior to 11 a.m. on the 8th January 1926= —48·51 with reference to P. W. D. datum.

Zero of the gauge at Dacca Waterworks since 11 a.m. of the 8th January 1926=0·00 with reference to P. W. D. datum.

M. K. BHATTACHARJEE, *Executive Engineer,*
Khulna Division.

Khulna, the 5th September 1936.

Statement of weekly gauge readings on the river Ganges at Rampur Boalia for the week ending the 29th August 1936.

Date.	Hour.	Height of surface above P. W. D. datum.	Height of surface above P. W. D. datum on the same date last year.	Remarks.
1936.				Value of B.M. on Rajshahi College step = 64·73 P. W. D.
23rd August	7 a.m.	61·20	61·50	Zero of gauge = 0·00 P. W. D.
24th „	7 „	60·80	61·30	
25th „	7 „	60·60	61·00	
26th „	7 „	60·70	61·10	
27th „	7 „	60·95	60·80	
28th „	7 „	61·00	60·70	
29th „	7 „	61·10	60·60	

Highest recorded level on 26-8-1879=64·24.
Lowest recorded level on 24-4-1931=32·05.

S. GUPTA, *Subdivisional Officer,*
Irrigation Department, Rajshahi.

Rampur Boalia, the 29th August 1936.

CORPORATION OF CALCUTTA.

NOTICES.

Central Municipal Office, the 3rd September 1936.

It is hereby notified for general information that the Corporation of Calcutta under powers vested in them in this behalf have by a resolution, dated the 24th August 1936, prescribed the alignment of the public street in continuation of Chintamoni Das Lane towards the north up to Rama Nath Mozumdar Street in Ward No. 9 to a width of 16 feet.

A copy of the plan prepared in this behalf may be seen in the office of the Chief Valuer and Surveyor of the Corporation any day between 11 a.m. and 3 p.m. on payment of usual fees.

Central Municipal Office, the 5th September 1936.

It is hereby notified for general information that the Corporation of Calcutta under powers vested in them in this behalf have by a resolution, dated the 26th August 1936, prescribed the alignment of the portion of Bhuban Banerjee Lane around premises Nos. 16, 16/1, 16/2, 16/3 and 16/4 in Ward No. 6 to a width of 16 feet.

A copy of the plan prepared in this behalf may be seen in the office of the Chief Valuer and Surveyor of the Corporation any day between 11 a.m. and 3 p.m. on payment of usual fees.

It is hereby notified for general information that the Corporation of Calcutta under powers vested in them in this behalf have by a resolution, dated the 26th August 1936, prescribed the alignment of a projected public street running along the existing street connecting the northern and southern limbs of Madhab Lane in Ward No 21 to a width of 16 feet.

A copy of the plan prepared in this behalf may be seen in the office of the Chief Valuer and Surveyor of the Corporation any day between 11 a.m. and 3 p.m. on payment of usual fees.

J. C. MUKERJEA,
Chief Executive Officer.

FORM C—BENGAL.

STATEMENT OF COTTON PRESSED IN THE BENGAL PRESIDENCY FOR THE WEEK ENDING THE 28th AUGUST 1936.

[Section 5 (2) of the Cotton Ginning and Pressing Factories Act, 1925.]

Name of Division or block.	Number of bales pressed.				District included in the block.
	During the week.	During the corresponding week last year.	Since 1st September 1935 (the date prescribed by the Local Government as the commencement of the season).	During the corresponding period last year.	
The Bengal Presidency	668 or 667·86 bales of 400 lbs. each.	1,007	67,824	48,597	All districts in the Presidency.

J. B. McBRIDE,
Chief Inspector of Factories, Bengal.

Supplementary statement showing particulars of cotton pressing factories in Bengal and the special mark re-allotted to each factory for the cotton year 1936 as required under the Cotton Ginning and Pressing Factories Act, 1925, and the Rules made thereunder.

Name and address of factory.	Name of owner or lessee.	Special mark allotted.
The Chitpur Jute Press, Ltd., 15, Kali Prasanna Singhee Road, Cossipore.	The Chitpur Jute Press, Ltd., Managing Agents, Messrs. Birla Brothers Ltd.	13 L
The Karnaphuli Jute Mills, Damakhali post-office Maheshkhali, district Chittagong.	The Karnaphuli Jute Mills, Ltd. ..	17 L

J. B. McBRIDE,
Chief Inspector of Factories, Bengal.

Vital statistics of towns with a population of 50,000 and over of the Bengal Presidency for the week ending Saturday, the 29th August 1936.

Districts.	Nos.	Towns.	Population under registration according to census of 1931.			Births registered.		Deaths registered																							
																										Total of all causes.			Total of corresponding week of the previous year.		
			Male.	Female.	Total.	Number registered (excluding still births).	Still-births registered.	Cholera.	Small-pox.	Plague.	Cerebro-spinal meningitis.	Malaria.	Enteric fever.	Measles.	Relapsing fever. (Spirochætal).	Kala-azar	Influenza.	Other fevers.	Dysentery.	Diarrhœa.	Pneumonia.	Pulmonary tuberculosis.	Other respiratory diseases.	Injuries including suicide.	Deaths from child-birth.	Other causes.	Male.	Female.	Total.	Male.	Female.	Total.
Calcutta	1	Calcutta	778,817	362,045	1,140,862	574	75	4	9	..	5	11	21	..	..	..	4	28	33	13	58	61	37	11	3	249	301	246	547	298	262	560
Burdwan	2	Asansol Mining Settlement.	209,544	173,136	382,680	252	3	2	..	..	..	..	2	..	..	..	..	77	6	1	12	2	5	2	1	51	98	63	161	119	123	242
Howrah	3	Howrah	145,120	79,753	224,873	141	9	1	..	..	..	2	5	..	..	..	..	1	3	11	9	9	23	2	..	43	45	64	109	55	55	110
Dacca	4	Dacca	79,365	59,153	138,518	96	2	..	..	..	..	..	..	1	..	1	..	..	3	1	12	3	4	2	...	25	29	23	52	46	21	67
24-Parganas	5	Bhatpara	60,134	24,841	84,975	27	1	1	..	..	..	..	..	..	..	..	..	7	..	..	1	..	1	1	..	10	14	7	21	16	12	28
	6	Garden Reach	36,131	19,741	55,872	20	..	..	..	..	..	..	4	..	..	..	..	1	2	..	..	1	1	..	1	3	9	4	13	9	6	15
Chittagong	7	Chittagong	35,049	18,107	53,156	23	1	..	..	..	..	..	1	..	..	..	..	3	1	..	2	..	1	..	1	4	9	4	13	11	6	17

Calcutta, the 5th September 1936.

A. C. CHATTERJI, M.B., D.P.H., MAJOR, I.M.S., *Director of Public Health, Bengal.*

Printed and published by the Superintendent, Government Printing, Bengal Government Press, Alipore, Bengal, on the 10th September 1936.

Registered No. C207

No. 38 of 1936

The Calcutta Gazette

Published by Authority

THURSDAY, SEPTEMBER 17, 1936.

CONTENTS:

	Page.
PART I.—Orders and Notifications by the Governor of Bengal, the Government of Bengal, the High Court, Government Treasury, etc.	2191—2298
PART IA.—Orders and Notifications by the Government of India republished for general information	319—321
PART IB.—Educational Notices ..	1403—1406
PART II.—Advertisements ..	941—970
PART III.—Acts of the Bengal Legislative Council	*Nil*
PART IV.—Bills introduced in the Bengal Legislative Council, Reports of Select Committees presented or to be presented to that Council, and Bills published before introduction in that Council ..	*Nil*
PART V.—Acts of the Indian Legislature assented to by the Governor-General and Ordinances promulgated under section 72 of the Government of India Act ..	*Nil*
PART VI.—Bills introduced in the Council of State and Legislative Assembly, Reports of Select Committees presented to the Council and Assembly and Bills published under rule 18 of the Indian Legislative Rules	*Nil*
SUPPLEMENT No. 38 :—	
Annual Report of the Royal Botanic Garden and the Gardens in Calcutta and of the Lloyd Botanic Garden, Darjeeling, for 1935-36	1225—1233
Weekly Gauge Readings—Monthly Weather and Crop Report—Weekly Weather and Crop Report—Corporation of Calcutta Notices—Weekly Vital Statistics—Major and Minor Works and Navigation—Cotton Ginning and Pressing	1234—1244
Liberality of Maulvi Haji Miyan Khan Sawdagar, a Commissioner of the Chittagong Municipality ..	1244
Resolution on the Annual Report of the Department of Agriculture, Bengal, for the year 1935-36	1245—1248

PART I

Orders and Notifications by the Governor of Bengal, the Government of Bengal, the High Court, Government Treasury, etc.

Orders by the Government of Bengal.

No. 10806A.

Appointments and Transfers.

GENERAL.

24-Parganas.—No. 10663A.—7th September 1936.—Maulvi A. K. Bazlul Karim, Deputy Magistrate and Deputy Collector, Diamond Harbour, 24-Parganas, is appointed temporarily to have charge of that subdivision.

Rajshahi Divn.—No. 10703A.—10th September 1936.—Babu Rai Mohan Samanta, Sub-Deputy Collector, on leave, is posted temporarily to the Rajshahi Division.

Jessore.—No. 10724A.—10th September 1936.—Maulvi Majumdar Abdul Muttalib, Deputy Magistrate and Deputy Collector, Jessore, is appointed temporarily to have charge of the Jhenidah subdivision of that district.

Midnapore.—No. 1344A.D.—11th September 1936.—Maulvi Altafur Rahman Khan, Deputy Magistrate and Deputy Collector, Contai, Midnapore, is appointed temporarily to have charge of that subdivision.

Burdwan-Jessore.—No. 10745A.—11th September 1936.—Babu Indu Bhusan Nag, Deputy Magistrate and Deputy Collector, Burdwan, is transferred to the headquarters station of the Jessore district.

Burdwan-Jessore. — No. 10750A. — 11th September 1936.—The orders of the 25th August 1936, transferring Mr. Viresh Chandra Datta, Deputy Magistrate and Deputy Collector, Burdwan, to the headquarters station of the Jessore district, are cancelled.

Leave.

GENERAL.

Nadia.—No. 10688A.—9th September 1936.—Mr. Nirmal Sankar Sen, M.B.E., Deputy Magistrate and Deputy Collector, Nadia, is allowed leave on average pay for three days, under rule 81 (*b*) (*ii*) of the Fundamental Rules, with effect from the 15th October 1936.

Bakarganj.—No. 10691A.—9th September 1936.—Babu Gurudas Sarkar, Deputy Magistrate and Deputy Collector, Bakarganj, is allowed leave on average pay, under rule 81 (*b*) (*ii*) of the Fundamental Rules, from the 25th September to the 7th November 1936, inclusive.

No. 10699A.—10th September 1936.—Babu Rai Mohan Samanta, Sub-Deputy Collector, is allowed earned leave for ninety days, under rule 10 of the Bengal Services (Revision of Leave) Rules, 1934, with effect from the 7th July 1936.

Howrah.— No. 10709A. — 10th September 1936.—Mr. Alexander Jitendra Lal Mitter, Deputy Magistrate and Deputy Collector, Howrah, is allowed leave on average pay for thirteen days, under rule 81 (*b*) (*ii*) of the Fundamental Rules, with effect from the 31st October 1936.

Mymensingh.—No. 10739A. — 11th September 1936.—Babu Upendra Mohan Basu, Deputy Magistrate and Deputy Collector, Mymensingh, is allowed leave on average pay for thirteen days, under rule 81 (*b*) (*ii*) of the Fundamental Rules, with effect from the 31st October 1936.

POLICE.

Khulna.—No. 10716A.—10th September 1936.—Mr. Khondkar Fazle Sobhan, I.P., officiating Superintendent of Police, Khulna, is allowed leave on average pay for seventeen days, under rule 81 (*b*) (*ii*) of the Fundamental rules, with effect from the 1st October 1936.

Bakarganj.—No. 10717A.—10th September 1936.—Mr. Fazlur Rahman Khondkar, I.P., officiating Additional Superintendent of Police, Bakarganj, is allowed leave on average pay for seventeen days, under rule 81 (*b*) (*ii*) of the Fundamental Rules, with effect from the 1st October 1936.

E. N. BLANDY,

Chief Secy. to the Govt. of Bengal (offg.).

NOTIFICATIONS.

No. 10401A.—2nd September 1936.—It is notified for general information that two vacancies in the Bengal Police Service will be filled from the examination to be held in February 1937 for recruitment of officers to the Bengal Civil Service (Executive), the Bengal Junior Civil Service, etc., the instructions regarding which were published in Government notification No. 9474A., dated the 21st August 1936.

No. 10349A.—2nd September 1936.—In exercise of the powers conferred by rules 44 and 54 of the Civil Services (Classification, Control and Appeal) Rules, the following rules are made by the Local Government:—

PART I.

General.

1. These rules shall be called the Bengal Subordinate Services (Discipline and Appeal) Rules, 1936.

2. They shall apply to all Subordinate Services and posts under the Government of Bengal other than services and posts manned by—

(1) persons employed occasionally or subject to discharge at less than one month's notice,

(2) persons for whose appointment and conditions of service special provision is made by or under any law for the time being in force, or,

(3) persons who have been excluded from the operation of the Civil Services (Classification, Control and Appeal) Rules by declaration of the Local Government under rule 4 of those Rules.

3. For the purposes of these rules "Government" means the Local Government as defined in section 134(*1*) of the Government of India Act, 1919.

4. All first appointments to the services or posts included in the Schedule to these rules shall be made by the authority mentioned in column 2 of that Schedule.

5. All first appointments to the Subordinate Services not included in the Schedule to these rules shall be made by the head of the office in administrative charge of the service or post.

NOTE.—If any doubt arises as to who is the head of the office for the purposes of this rule, the matter shall be referred to the Local Government, whose decision shall be final.

6. Nothing in these rules or in any rule made thereunder shall operate to deprive any person of any right or privilege to which he is entitled—

(*a*) by or under any law, or

(*b*) by the terms of any contract or agreement subsisting between such person and Government on the date these rules came into force.

PART II.

Discipline.

7. The following penalties may, for good and sufficient reason and as hereinafter provided, be imposed upon members of Subordinate Services, namely:—

(*i*) Censure.

(*ii*) Withholding of increments or promotion, including stoppage at an efficiency bar.

(*iii*) Reduction to a lower post or time-scale, or to a lower stage in a time-scale.

(*iv*) Recovery from pay of the whole or part of any pecuniary loss caused to Government by negligence or breach of orders.

(*v*) Suspension.

(*vi*) Removal from the civil service of the Crown, which does not disqualify from future employment.

(*vii*) Dismissal from the civil service of the Crown, which ordinarily disqualifies from future employment.

Explanation.—The discharge

(*a*) of a person appointed on probation, during the period of probation,

(*b*) of a person appointed otherwise than under contract to hold a temporary appointment, on the expiration of the period of the appointment,

(*c*) of a person engaged under contract, in accordance with the terms of his contract,

does not amount to removal or dismissal within the meaning of this rule.

8. Subject to the condition that no officer may be removed or dismissed by an authority subordinate to that by which he was appointed, the authorities specified in column 3 of the Schedule to these rules may impose the penalties specified in column 4 of that Schedule upon members of the services included in that Schedule.

9. Subject to the condition that no officer may be removed or dismissed by an authority subordinate to that by which he was appointed, the authority having power to make first appointments to the service or post in question may impose any penalty specified in rule 7 upon members of Subordinate Services not included in the Schedule to these rules.

10. (*i*) Without prejudice to the provisions of rule 55 of the Civil Services (Classification, Control and Appeal) Rules, no order imposing a penalty specified in rule 7, other than an order of censure or suspension pending proceedings or an order based on facts which have led to his conviction in a criminal court, shall be passed against a member of a subordinate service unless the officer concerned has been given an adequate opportunity of making any representation that he may desire to make and such representation, if any, has been taken into consideration before the order is passed:

Provided that the requirements of this sub-rule may, for sufficient reasons to be recorded in writing, be waived where there is difficulty in observing them and they can be waived without injustice to the officer concerned.

(*ii*) The authority imposing any penalty under these rules shall maintain or cause to be maintained a record showing—

(*a*) the allegations upon which he proceeded against the officer punished,

(*b*) the officer's representation, if any, and the evidence taken, if any,

(*c*) a recital of the officer's previous character as recorded in his service book or office records,

(*d*) the finding and the grounds thereof.

(*iii*) In the case of an officer who has been lent to the punishing authority, the latter shall consult the lending authority before exercising any power of punishment other than the power to suspend.

(*iv*) When the orders for punishments are passed by an authority other than the person conducting the enquiry into the conduct of the Government officer concerned, it will be sufficient if the authority passing orders of punishment definitely records his agreement or disagreement with the person by whom the enquiry was conducted.

PART III.

Appeals.

11. Every member of a Subordinate Service shall be entitled to appeal, as hereinafter provided, from an order—other than an order of the Local Government.—

(*a*) imposing upon him any of the penalties specified in rule 7; or

(*b*) discharging him in accordance with the terms of his contract

if he has been engaged on a contract for a fixed or for an indefinite period and has rendered under either form of contract continuous service for a period exceeding five years at the time when his services are terminated

12 Members of services included in the Schedule to these rules may appeal from orders passed in exercise of powers conferred by rule 8 to the authorities specified in column 5 of that Schedule.

NOTE.—If, owing to the conditions mentioned in rule 8, the authority ordering the removal or dismissal of an officer is higher than the authority specified in column 3 of the Schedule, then the officer shall be entitled to appeal to the authority immediately superior to the authority imposing the penalty. If any doubt arises as to who that authority is, the matter shall be referred to the Local Government whose decision shall be final.

13 Members of Subordinate Services not included in the Schedule to these rules may appeal from orders passed in exercise of powers conferred by rule 9 to the authority immediately superior to the authority imposing the penalty.

NOTE.—If any doubt arises as to who is the immediately superior authority for the purposes of this rule, the matter shall be referred to the Local Government whose decision shall be final.

14. A member of a Subordinate Service may appeal from an order of discharge of the kind referred to in rule 11(*b*) to the authority to whom he would have been entitled to appeal under these rules had the order been an order of dismissal.

15. The appellate authority shall consider—

(*a*) whether the facts on which the order was based have been established;

(*b*) whether the facts established afford sufficient ground for taking action; and

(*c*) whether the penalty is excessive, adequate or inadequate;

and after such consideration shall pass such order as it thinks proper.

16. Every person preferring an appeal shall do so separately and in his own name.

17. Every appeal preferred under these rules shall contain all material statements and arguments relied on by the appellant, shall contain no disrespectful or improper language, and shall be complete in itself. Every such appeal shall be addressed to the authority to whom the appeal is preferred, through the authority from whose order the appeal is preferred, and shall be submitted through the usual official channel.

18. An appeal may be withheld by an authority not lower than the authority from whose order it is preferred, if

(1) it is an appeal in a case in which under these rules no appeal lies, or

(2) it does not comply with the provisions of rule 17, or

(3) it is not preferred within six months after the date on which the appellant was informed of the order appealed against, and no reasonable cause is shown for the delay, or

(4) it is a repetition of a previous appeal and is made to the same appellate authority by which such appeal has been decided, and no new facts or circumstances are adduced which afford grounds for a reconsideration of the case:

Provided that in every case in which an appeal is withheld the appellant shall be informed of the fact and the reasons for it:

Provided also that an appeal withheld on account only of failure to comply with the provisions of rule 17 may be resubmitted at any time within one month of the date on which the appellant has been informed of the withholding of the appeal, and, if resubmitted in a form which complies with those provisions, shall not be withheld.

19. No appeal shall lie against the withholding of an appeal by a competent authority.

20. A list of appeals withheld under rule 18, with the reasons for withholding them, shall be forwarded quarterly by the withholding authority to the appellate authority.

21. An appellate authority may call for the records of any appeal withheld by an authority subordinate to it which under these rules may be made to it and may pass such orders thereon as it considers fit.

22. Nothing in these rules shall preclude the Local Government from revising, whether on its own motion or otherwise, any order passed by an authority subordinate to it in exercise of powers conferred on such authority by these rules.

23. Nothing in these rules shall operate to deprive any member of a subordinate service of any right of appeal which he would have had if these rules had not been made, in respect of any order made before these rules came into force. An appeal in respect of such an order pending on, or preferred after, the second September, 1936 shall be deemed to be an appeal under these rules, and rule 15 shall apply as if the appeal were from an order appealable under these rules.

24. Except under very special circumstances no pleader or agent should be allowed to appear either on behalf of Government or the accused either before the officer who conducts the enquiry or any officer to whom appeal may be made.

SCHEDULE TO THE BENGAL SUBORDINATE SERVICES (DISCIPLINE AND APPEAL) RULES.

Police Department.

Title of service or post.	Authority empowered to appoint.	Authority empowered to impose penalties, and penalties which he may impose.		Appellate authority.
		Authority.	Penalties (*see* rule 7)— (*i*) Censure. (*ii*) Withholding of increments, etc. (*iii*) Reduction to a lower post, etc. (*iv*) Recovery from pay, etc. (*v*) Suspension. (*vi*) Removal, etc. (*vii*) Dismissal, etc.	
1	2	3	4	5
BENGAL POLICE.				
Ministerial Establishment.				
Inspector-General's Office.				
Superintendent and Head Assistant	Inspector-General of Police ..	Inspector-General of Police ..	All	Secretary to Government in the Department concerned.
Upper and Lower Division Assistants, Stenographer and Typists.	Assistant Inspector-General of Police.	Assistant Inspector-General of Police.	All	Inspector-General of Police.
Criminal Investigation Department and Intelligence Branch.				
Superintendent	Deputy Inspector-General of Police.	Deputy Inspector-General of Police.	All	Inspector-General of Police.
Upper and Lower Division Assistants, Accountant, Stenographer and Typists.	Assistant to the Deputy Inspector-General, Criminal Investigation Department, or Special Superintendent, Intelligence Branch.	Assistant to the Deputy Inspector-General, Criminal Investigation Department, or Special Superintendent, Intelligence Branch.	All	Deputy Inspector-General of Police.

Range Deputy Inspector-General's Office.				
Head Assistant	Deputy Inspector-General of Police.	Deputy Inspector-General of Police.	All	Inspector-General of Police.
Lower Division Assistants and typists	Ditto	Ditto	All	Ditto.
District Police Offices.				
Head Clerks and Accountants	Deputy Inspector-General of Police.	Superintendent	(i) to (v)	Deputy Inspector-General of Police.
		Deputy Inspector-General of Police.	(vi) and (vii) ..	Inspector-General of Police.
Subordinate clerks	Superintendent	Superintendent	All	Deputy Inspector-General of Police.
Office of the Commandant, Eastern Frontier Rifles.				
Head Clerk, Accountant and subordinate clerks ..	Commandant	Commandant	All	Inspector-General of Police.

Title of service or post.	Authority empowered to appoint.	Authority empowered to impose penalties, and penalties which he may impose.		Appellate authority.
		Authority.	Penalties (*see* rule 7)— (i) Censure. (ii) Withholding of increments, etc. (iii) Reduction to a lower post, etc. (iv) Recovery from pay, etc. (v) Suspension. (vi) Removal, etc. (vii) Dismissal, etc.	
1	2	3	4	5
Police Training College or School.				
Head Clerk and Accountant	Deputy Inspector-General of Police.	Principal	(i) to (v)	Deputy Inspector-General of Police.
		Deputy Inspector-General of Police.	(vi) and (vii) ..	Inspector-General of Police.
Subordinate clerks	Principal	Principal	All	Deputy Inspector-General of Police.
Posts other than ministerial.				
Saluter and Mechanic in the Police Training College ..	Principal	Principal	All	Deputy Inspector-General of Police.
Fitter-driver in the Burdwan Police Lines ..	Superintendent	Superintendent	All	Ditto.
Hospital Establishment.				
Compounders in Police Hospitals .. .	Superintendent in consultation with the Civil Surgeon.	Superintendent with the concurrence of the Civil Surgeon.	All	Deputy Inspector-General of Police.

CALCUTTA POLICE.				
Ministerial Establishment.				
Superintendent	Deputy Commissioner of Police, Headquarters	Deputy Commissioner of Police, Headquarters	All	Commissioner of Police.
Head Assistant	Ditto	Ditto	All	Ditto.
Assistant—				
Selection Grade	Ditto	Ditto	All	Ditto.
Upper Division	Ditto	Ditto	All	Ditto.
Lower Division	Ditto	Ditto	All ..	Ditto.
Stenographer	Ditto	Ditto	All	Ditto.
Typists	Ditto	Ditto	All	Ditto.
Treasurer's Assistant	Ditto	Ditto	All	Ditto.

Title of service or post.	Authority empowered to appoint.	Authority empowered to impose penalties, and penalties which he may impose.		
		Authority.	Penalties (see rule 7)— (i) Censure. (ii) Withholding of increments, etc. (iii) Reduction to a lower post, etc. (iv) Recovery from pay, etc. (v) Suspension. (vi) Removal, etc. (vii) Dismissal, etc.	Appellate authority
1	2	3	4	5
Posts other than ministerial.				
Lady Superintendent, Rescue Home	Deputy Commissioner of Police, Headquarters	Deputy Commissioner of Police, Headquarters	All	Commissioner of Police.
Matron, Rescue Home	Ditto	Ditto	All	Ditto.
Supervisor, Police Morgue	Ditto	Ditto	All	Ditto.
Indian Motor Mechanic	Ditto	Ditto ..	All	Ditto.
Governor, Government Work House	Local Government ..	Deputy Commissioner of Police	(i) to (iv) ..	Ditto.
		Local Government ..	(v), (vi) and (vii) ..	The order of Government is final.
Female Warder, Central Police Lockup	Deputy Commissioner of Police	Deputy Commissioner of Police, Headquarters	All	Commissioner of Police.

Hospital Establishment.				
Compounder, Matron and nurses, Calcutta Police Hospital	Police Surgeon	..	All	Commissioner of Police.
Press Establishment.				
Printer	Deputy Commissioner of Police, Headquarters	..	All	Commissioner of Police.
Compositor	Ditto	..	All	Ditto.
Machineman	Ditto	..	All	Ditto.
Fireman	Ditto	..	All	Ditto.
Distributor	Ditto	..	All	Ditto.
Special Branch.				
Head Assistant, assistants, clerks, stenographer and Typists.	Deputy Commissioner of Police, Special Branch.	..	All	Commissioner of Police.
Temporary ministerial and menial officers	Ditto	..	All	Ditto.

Title of service or post.	Authority empowered to appoint.	Authority empowered to impose penalties, and penalties which he may impose.		Appellate authority.
		Authority.	Penalties (*see* rule 7)— (*i*) Censure. (*ii*) Withholding of increments, etc. (*iii*) Reduction to a lower post, etc. (*iv*) Recovery from pay, etc. (*v*) Suspension. (*vi*) Removal, etc. (*vii*) Dismissal, etc.	
1	2	3	4	5
BENGAL POLICE.				
Office of the Inspector-General of Police.				
Contingency menials—Farash	Assistant Inspector-General ..	Assistant Inspector-General ..	All	Inspector-General of Police.
Inferior pensionable servants—				
Record Supplier	Ditto	Ditto	All	Ditto.
Duftry	Ditto	Ditto	All	Ditto.
Temporary ministerial and menial officers ..	Ditto	Ditto	All	Ditto.

Office of the Deputy Inspector-General of Police, Criminal Investigation Department, Intelligence Branch.				
Contingency menials—				
Farash Sweeper	Assistant to the Deputy Inspector-General, Criminal Investigation Department.	Assistant to the Deputy Inspector-General, Criminal Investigation Department.	All	Deputy Inspector-General, Criminal Investigation Department.
Inferior pensionable servants	Special Assistant, Intelligence Branch.	Special Assistant, Intelligence Branch.	All	Ditto.
Duftry	Ditto	Ditto	All	Ditto.
Inferior pensionable servants—Duftry	Ditto	Ditto	All	Ditto.
Temporary ministerial or menial officers	Ditto	Ditto	All	Ditto.
Office of the Range Deputy Inspector-General.				
Contingency menials—Sweeper	Deputy Inspector-General	Deputy Inspector-General	All	Inspector-General of Police.
Inferior pensionable servants—Duftry	Ditto	Ditto	All	Ditto.
Temporary ministerial and menial officers	Ditto	Ditto	All	Ditto.

Title of service or post.	Authority empowered to appoint.	Authority empowered to impose penalties, and penalties which he may impose.		Appellate authority.
		Authority.	Penalties (*see* rule 7)— (i) Censure. (ii) Withholding of increments, etc. (iii) Reduction to a lower post, etc. (iv) Recovery from pay, etc. (v) Suspension. (vi) Removal, etc. (vii) Dismissal, etc.	
1	2	3	4	5
Offices of the Superintendents of Police.				
Contingency menials—Sweeper	Superintendent of Police or Additional Superintendent of Police or Assistant Superintendent of Police or Deputy Superintendent of Police.	Superintendent of Police or Additional Superintendent of Police or Assistant Superintendent of Police or Deputy Superintendent of Police.	All	Deputy Inspector-General or Superintendent of Police.
Inferior pensionable servants—Duftry	Superintendent of Police ..	Superintendent of Police ..	All	Deputy Inspector-General.
Temporary ministerial and menial officers ..	Ditto	Ditto	All	Ditto.
Office of the Principal, Police Training College.				
Contingency menials—Sweeper	Principal	Principal	All	Deputy Inspector-General.
Inferior pensionable servants—Duftry	Ditto	Ditto	All	Ditto.

Temporary ministerial and menial officers ..	Ditto	Ditto	All	Ditto.
Office of the Commandant, Eastern Frontier Rifles.				
Contingency menials—Sweeper	Assistant Commandant ..	Assistant Commandan ..	All	Commandant.
Inferior pensionable servants—Duftry	Ditto	Ditto	All	Ditto.
Temporary ministerial and menial officers ..	Ditto	Ditto	All ..	Ditto.
Police Hospital.				
Contingency menials—				
Cook	Superintendent of Police or Additional Superintendent of Police or Assistant Superintendent of Police or Deputy Superintendent of Police or Principal, Police Training College, or Assistant Commandant or Commandant	Superintendent of Police or Additional Superintendent of Police or Assistant Superintendent of Police or Deputy Superintendent of Police or Principal, Police Training College, or Assistant Commandant or Commandant	All ..	Deputy Inspector-General of Police or Superintendent of Police or Commandant or Inspector-General of Police
Sweeper	Ditto ..	Ditto ..	All ..	Ditto
Bhisti or Waterman	Ditto .	Ditto	All ..	Ditto
Ward servants	Ditto ..	Ditto	All .	Ditto.

Title of service or post.	Authority empowered to appoint.	Authority empowered to impose penalties, and penalties which he may impose.		Appellate authority.
		Authority.	Penalties (*see* rule 7)— (i) Censure. (ii) Withholding of increments, etc. (iii) Reduction to a lower post, etc. (iv) Recovery from pay, etc. (v) Suspension. (vi) Removal, etc. (vii) Dismissal, etc.	
1	2	3	4	5
Other miscellaneous menials in various Police offices, Intelligence Branch and Eastern Frontier Rifles.				
Contingency menials—				
Syce	Superintendent of Police or Additional Superintendent of Police or Assistant Superintendent of Police or Deputy Superintendent of Police or Principal, Police Training College, or Assistant Commandant or Commandant.	Superintendent of Police or Additional Superintendent of Police or Assistant Superintendent of Police or Deputy Superintendent of Police or Principal, Police Training College, or Assistant Commandant or Commandant.	All ..	Deputy Inspector-General of Police or Superintendent of Police or Commandant or Inspector-General of Police.
Carter (or cart driver)	Ditto ..	Ditto ..	All ..	Ditto.
Grass cutter	Ditto ..	Ditto ..	All ..	Ditto.
Lampman	Ditto ..	Ditto ..	All ..	Ditto.
Mali	Ditto ..	Ditto ..	All ..	Ditto.
Jamadar Mahut	Ditto ..	Ditto ..	All ..	Ditto.
Mahut	Ditto ..	Ditto ..	All ..	Ditto.
Muchi	Ditto ..	Ditto ..	All ..	Ditto.

Beldar	..	..	..	Ditto	..	Ditto	..	All	..	Ditto.
Mate	..	..	..	Ditto	..	Ditto	..	All	..	Ditto.
Bhandari	..	..	..	Ditto	..	Ditto	..	All	..	Ditto.
Topaz	..	..	..	Ditto	..	Ditto	..	All	..	Ditto.
Calcutta Police.										
Contingency menials—										
Bhisti	..	..	..	Deputy Commissioner of Police		Deputy Commissioner of Police		All	..	Commissioner of Police.
Mehtar	..	..	..	Ditto	..	Ditto	..	All	..	Ditto.
Sweeper	..	..	..	Ditto	..	Ditto	..	All	..	Ditto.
Syce	..	..	..	Ditto	..	Ditto	..	All	..	Ditto.
Tailor	..	..	..	Ditto	..	Ditto	..	All	..	Ditto.
Cleaner	..	..	..	Ditto	..	Ditto	..	All	..	Ditto.
Pumping cooly	..	..	..	Ditto	..	Ditto	..	All	..	Ditto.
Mali	..	..	..	Ditto	..	Ditto	..	All	..	Ditto.
Cook	..	..	..	Ditto	..	Ditto	..	All	..	Ditto.

Title of service or post.	Authority empowered to appoint.	Authority empowered to impose penalties, and penalties which he may impose.		Appellate authority.
		Authority.	Penalties (see rule 7)— (i) Censure. (ii) Withholding of increments, etc. (iii) Reduction to a lower post, etc. (iv) Recovery from pay, etc. (v) Suspension. (vi) Removal, etc (vii) Dismissal, etc.	
1	2	3	4	5
Inferior (Pensionable) Servants—				
Record Suppliers	Deputy Commissioner of Police	Deputy Commissioner of Police	All ..	Commissioner of Police.
Duftries	Ditto ..	Ditto ..	All ..	Ditto.
Jamadar	Ditto ..	Ditto ..	All ..	Ditto.
Durwans	Ditto ..	Ditto ..	All ..	Ditto.
Peons	Ditto ..	Ditto ..	All ..	Ditto.
Temporary ministerial and menial officers ..	Ditto ..	Ditto ..	All ..	Ditto.

Calcutta Police Hospital.			
Contingency menials—			
Bhisti	Police Surgeon ..	Police Surgeon ..	All ..	Commissioner of Police.
Cooks	Ditto ..	Ditto ..	All ..	Ditto.
Dhobees	Ditto ..	Ditto ..	All ..	Ditto.
Mali	Ditto ..	Ditto ..	All ..	Ditto.
Mehtar	Ditto ..	Ditto ..	All ..	Ditto.
Tailor	Ditto ..	Ditto ..	All ..	Ditto.
Shop Coolie	Ditto ..	Ditto ..	All ..	Ditto.
Sweeper	Ditto ..	Ditto ..	All ..	Ditto.
Waterman	Ditto ..	Ditto ..	All ..	Ditto.
Inferior (Pensionable) Servants—			
Dresser	Ditto	Ditto	All ..	Ditto.
Clothier	Ditto	Ditto	All ..	Ditto.
Dissector (Dead House)	Ditto	Ditto	All ..	Ditto.
Peon	Ditto	Ditto	All ..	Ditto.
Temporary menial officers	Ditto	Ditto	All ..	Ditto.

POLITICAL DEPARTMENT.

Political.

Title of service or post.	Authority empowered to appoint.	Authority empowered to impose penalties, and penalties which he may impose.		Appellate authority.
		Authority.	Penalties (see rule 7)— (i) Censure. (ii) Withholding of increments, etc. (iii) Reduction to a lower post, etc. (iv) Recovery from pay, etc. (v) Suspension. (vi) Removal, etc. (vii) Dismissal, etc.	
1	2	3	4	5
Bengali Translator's Office.				
Ministerial and inferior establishments	Deputy Secretary ..	Deputy Secretary to the Government of Bengal, Political Department.	All	Secretary to Government in the Department concerned.
Private Secretary's Office.				
Ministerial and inferior establishments	Private Secretary to His Excellency the Governor.	Private Secretary to His Excellency the Governor.	All	Such officer of Government not below the rank of Secretary as His Excellency the Governor may designate in the particular case.

Military Secretary's Office.					
Ministerial and inferior establishments	Military Secretary to His Excellency the Governor.	Military Secretary to His Excellency the Governor.	All		Such officer of Government not below the rank of Secretary as His Excellency the Governor may designate in the particular case.
Coroner's Office.					
Ministerial and inferior establishments	Coroner of Calcutta ..	Coroner of Calcutta ..	All		Secretary to Government in the Department concerned.
Political Agencies.					
Ministerial and inferior establishments	Political Agents, Cooch Behar and Tripura States.	Political Agents, Cooch Behar and Tripura States.	All		Ditto.
Political Pensions Office, Alipore.					
Ministerial and inferior establishments	Superintendent, Political Pensions, Alipore.	Superintendent, Political Pensions, Alipore.	All		Commissioner, Presidency Division.

Title of service or post.	Authority empowered to appoint.	Authority empowered to impose penalties, and penalties which he may impose.		Appellate authority.
		Authority.	Penalties (see rule 7)— (i) Censure. (ii) Withholding of increments, etc. (iii) Reduction to a lower post, etc. (iv) Recovery from pay, etc. (v) Suspension. (vi) Removal, etc. (vii) Dismissal, etc.	
1	2	3	4	5
Reporting Agency.				
English, Bengali and Urdu shorthand reporters ..	Deputy Secretary to the Government of Bengal, Political Department.	Deputy Commissioner of Police Calcutta or Deputy Inspector-General of Police, Bengal, as the case may be.	(i) to (v)	Secretary to Government in the Department concerned.
		Deputy Secretary to the Government of Bengal.	(vi) and (vii) ..	Ditto.
Bandmaster	Military Secretary to His Excellency the Governor.	Military Secretary to His Excellency the Governor.	All ..	His Excellency the Governor.

Finance Department.

Secretariat (including Central Despatch Office.)				
1. Ministerial Officers in the Secretariat including typists	Deputy Secretary or Assistant Secretary, as the case may be in the department concerned.	Deputy Secretary or Assistant Secretary, as the case may be in the department concerned.	All	Secretary to Government in the Department concerned.
2. Stenographers	Deputy Secretary to Government, Finance Department.	Deputy Secretary to Government, Finance Department.	All	Secretary to Government, Finance Department.
3. Muharrirs, Record-Suppliers, Sarkars, Duftaries, Jamadars and Peons.	Under-Secretary or Assistant Secretary as the case may be.	Under-Secretary or Assistant Secretary, as the case may be.	All	Secretary to Government in the Department concerned.
Bengal Government Press, Bengal Branch Press, Darjeeling and Private Secretary's Press.				
Manager, Private Secretary's Press, and all ministerial and industrial posts in the above presses (including Extra Piece Establishment).	Superintendent, Government Printing, Bengal.	Superintendent, Government Printing, Bengal.	All	Secretary to Government in the Department concerned.

Commerce Department.

Title of service or post.	Authority empowered to appoint.	Authority empowered to impose penalties, and penalties which he may impose.		Appellate authority.
		Authority.	Penalties (see rule 7)— (i) Censure. (ii) Withholding of increments, etc. (iii) Reduction to a lower post, etc. (iv) Recovery from pay, etc. (v) Suspension. (vi) Removal, etc. (vii) Dismissal, etc.	
1	2	3	4	5
1. Ministerial and inferior establishment in the office of the Chief Inspector of Factories, Bengal.	Chief Inspector of Factories, Bengal.	Chief Inspector of Factories, Bengal.	All	Secretary to Government in the Department concerned.
2. Ministerial and inferior establishment in the office of the Boiler Commission, Bengal.	Chief Inspector of Boilers, Bengal.	Chief Inspector of Boilers, Bengal.	All	President of the Boiler Commission, Bengal.
3. Ministerial and inferior establishment in the office of the Smoke Nuisances Commission, Bengal.	Chief Inspector, Smoke Nuisances Commission, Bengal.	Chief Inspector, Smoke Nuisances Commission, Bengal.	All	President of the Smoke Nuisances Commission, Bengal.
4. Ministerial and inferior establishment in the office of the Labour Commissioner, Bengal.	Labour Commissioner, Bengal	Labour Commissioner, Bengal	All	Secretary to Government in the Department concerned.

5. Ministerial and inferior establishment in the office of the Commissioner for Workmen's Compensation, Bengal.	Commissioner for Workmen's Compensation, Bengal.	Commissioner for Workmen's Compensation, Bengal.	All	..	Ditto.
6. Ministerial and inferior establishment in the office of the Electrical Adviser and Chief Electric Inspector, Bengal.	Electrical Adviser and Chief Electric Inspector, Bengal.	Electrical Adviser and Chief Electric Inspector, Bengal.	All	..	Ditto.
7. Assistant Electric Inspectors, and Laboratory Assistant.	Deputy Secretary to Government, Commerce Department.	Electrical Adviser ..	(i) to (v)	..	Ditto.
		Deputy Secretary to Government, Commerce Department.	(vi) and (vii)	..	Ditto.

Marine Department.

Title of service or post.	Authority empowered to appoint.	Authority empowered to impose penalties, and penalties which he may impose		Appellate authority.
		Authority.	Penalties (*see* rule 7)— (i) Censure. (ii) Withholding of increments, etc. (iii) Reduction to a lower post, etc. (iv) Recovery from pay, etc (v) Suspension. (vi) Removal, etc. (vii) Dismissal, etc	
1	2	3	4	5
1. Foreman, Government Dockyard, Narayanganj ..	Deputy Secretary to the Government of Bengal, Marine Department.	Engineer Superintendent, Government Dockyard, Narayanganj.	(i) to (v)	Secretary to Government in the Department concerned.
		Deputy Secretary to Government, Marine Department.	(vi) and (vii) ..	Ditto
2. Supervisor, Government Dockyard, Narayanganj	Ditto ..	Deputy Secretary to Government, Marine Department	(vi) and (vii) ..	Secretary to Government in the Department concerned.
		Engineer Superintendent, Government Dockyard, Narayanganj.	(i) to (v)	Ditto

3. Electrician, Government Dockyard, Narayanganj.	Engineer Superintendent, Government Dockyard, Narayanganj.	Engineer Superintendent, Government Dockyard, Narayanganj.	All	Secretary to Government in the Department concerned.
4. Ministerial posts in the Government Dockyard, Narayanganj.	Ditto	Ditto	All	Ditto.
5. Ministerial posts in the office of the Engineer and Ship Surveyor, Chittagong.	Engineer and Ship-Surveyor, Chittagong.	Engineer and Ship Surveyor, Chittagong.	All	Secretary to Government in the Department concerned.
6. Ministerial posts in the Pool Section of the Port Office, Calcutta.	Principal Officer, Mercantile Marine Department, Calcutta District, Calcutta.	Principal Officer, Mercantile Marine Department, Calcutta District, Calcutta.	All	Secretary to Government in the Department concerned.
7. Master-hands in the Government Dockyard, Narayanganj.	Engineer Superintendent, Government Dockyard, Narayanganj.	Engineer Superintendent, Government Dockyard, Narayanganj.	All	Ditto.
8. Crew of the launches in the Government Dockyard, Narayanganj.	Ditto	Ditto	All	Ditto.
9. Crew of the launches under the launch pooling scheme—				
(i) Serang and Drivers of Marine Department launches.	Deputy Secretary ..	Controlling officers of the launches.	(i) to (v) ..	Secretary to Government in the Department concerned.
		Deputy Secretary ..	(vi) and (vii) ..	Ditto.
(ii) Others	Controlling officers of the launches.	Controlling officers of the launches.	All	Ditto.

Irrigation Department.

Title of service or post.	Authority empowered to appoint	Authority empowered to impose penalties, and penalties which he may impose.		Appellate authority.
		Authority.	Penalties (*see* rule 7)— (i) Censure (ii) Withholding of increments, etc. (iii) Reduction to a lower post, etc. (iv) Recovery from pay, etc. (v) Suspension. (vi) Removal, etc. (vii) Dismissal, etc.	
1	2	3	4	5
1. Subordinate Engineering Service (Overseers) ..	Chief Engineer	Superintending Engineer ..	(i) to (v) .. .	Chief Engineer.
		Chief Engineer	(vi) and (vii) ..	Secretary to Government in the Department concerned.
2. Lower Subordinate Service	Ditto .. .	Ditto	Ditto	Ditto
3. Circle Officer	Ditto .. .	Ditto .. .	Ditto	Ditto
4. Zilladar	Ditto	Ditto	Ditto .. .	Ditto.

5.	Toll Collectors	Superintending Engineers ..		Superintending Engineers ..		All		Chief Engineer.
6.	Toll Darogas	Ditto		Ditto		All		Ditto.
7.	Kutnavis	Ditto		Ditto		All		Ditto.
8.	Correspondence and unpassed accounts clerks, typists, estimators and draftsmen included in the Circle Cadre.	Ditto		Ditto		All		Ditto.
9.	Office establishment of the Superintending Engineer's Office.	Ditto		Ditto ..		All		Ditto.
10.	Steamer Establishment including serangs, engine drivers and drivers.	Ditto		Ditto		All		Ditto.
11.	Surveyors	Ditto		Ditto		All		Ditto.
12.	Clerks, tahsildars, mohurrirs, amins employed in the Revenue Divisions.	Ditto		Ditto		All		Ditto.
13.	Office establishment other than correspondence and unpassed accounts clerks included in the Circle Cadre.	Executive Engineers ..		Executive Engineers ..		All		Superintending Engineers.
14.	Petty Establishment	Ditto		Ditto		All		Ditto.
15.	Peons and other menials	Ditto		Ditto		All		Ditto.
16.	Peons and daftries employed in the Midnapore Canal Revenue Division.	Circle Officer		Circle Officer		All		Ditto.

Legislative Department.

Title of service or post.	Authority empowered to appoint	Authority empowered to impose penalties, and penalties which he may impose		Appellate authority
		Authority	Penalties (see rule 7)— (i) Censure (ii) Withholding of increments, etc (iii) Reduction to a lower post, etc (iv) Recovery from pay, etc. (v) Suspension. (vi) Removal, etc (vii) Dismissal, etc	
1	2	3	4	5
Ministerial establishment .. .	Legislative Secretary	Legislative Secretary	All	Chief Secretary to Government
Menial staff	Second Assistant Secretary	Second Assistant Secretary	All .	Secretary to Government in the Department concerned

Judicial Department.

1. Office of the Administrator-General and Official Trustee, Bengal—Ministerial and inferior establishment.	Administrator-General and Official Trustee.	Deputy Administrator-General and Official Trustee.	(*i*) to (*v*) ..	Administrator-General and Official Trustee.
		Administrator-General and Official Trustee.	(*vi*) and (*vii*) ..	Secretary to Government in the Department concerned.
2. Office of the Legal Remembrancer, Bengal—Ministerial and inferior establishment.	Legal Remembrancer ..	Deputy Legal Remembrancer	(*i*) to (*v*) ..	Legal Remembrancer.
		Legal Remembrancer.	(*vi*) and (*vii*) ..	Chief Secretary and another Secretary to Government.
3. Office of the Chief Presidency Magistrate, Calcutta—Ministerial and inferior establishment.	Chief Presidency Magistrate ..	Additional Chief Presidency Magistrate.	(*i*) to (*v*) ..	Chief Presidency Magistrate
		Chief Presidency Magistrate.	(*vi*) and (*vii*) ..	Secretary to Government in the Department concerned.
4. Office of the Municipal Magistrate, Calcutta—Ministerial and inferior establishment.	Municipal Magistrate, Calcutta	Municipal Magistrate ..	All ..	Chief Presidency Magistrate, Calcutta.
5. House of Detention, Calcutta—				
(*a*) Probation officers ..	Chief Presidency Magistrate, Calcutta.	Magistrate, Children Court	(*i*) to (*v*) ..	Chief Presidency Magistrate.
		Chief Presidency Magistrate ..	(*vi*) and (*vii*) ..	Secretary to Government in the Department concerned.
(*b*) Superintendent, House of Detention, and inferior establishment.	Commissioner of Police, Calcutta	Deputy Commissioner, Headquarters.	(*i*) to (*v*) ..	Commissioner of Police, Calcutta.
		Commissioner of Police, Calcutta.	(*vi*) and (*vii*) ..	Secretary to Government in the Department concerned.

Revenue Department.

Title of service or post.	Authority empowered to appoint.	Authority empowered to impose penalties, and penalties which he may impose.		Appellate authority.
		Authority.	Penalties (*see* rule 7)— (i) Censure. (ii) Withholding of increments, etc. (iii) Reduction to a lower post, etc. (iv) Recovery from pay, etc. (v) Suspension. (vi) Removal, etc. (vii) Dismissal, etc.	
1	2	3	4	5
1. District Kanungos ..	Commissioners of Divisions ..	District Officers ..	(i), (ii), (iii) and (v) ..	Commissioners of Divisions.
		Commissioners of Divisions ..	(iv), (vi) and (vii) ..	Board of Revenue.
2. Ministerial and inferior establishment—				
(a) Offices of Commissioners of Divisions ..	Commissioners of Divisions ..	Commissioners of Divisions ..	All	Board of Revenue, Bengal.
(b) District offices ..	District Officers ..	District Officers ..	All ..	Commissioners of Divisions.
3. Ministerial establishment in subdivisional offices ..	Ditto ..	Subdivisional Officers ..	(i) and (v) ..	District Officers.
		District Officers ..	(ii), (iii), (iv), (vi) and (vii).	Commissioners of Divisions.
Inferior establishment in subdivisional offices ..	Subdivisional Officers ..	Subdivisional Officers ..	All ..	District Officers.
Ministerial and inferior establishments under the Protector of Emigrants, Calcutta.	Protector of Emigrants, Calcutta	Protector of Emigrants, Calcutta	All ..	Secretary to Government in the Department concerned.
Surveyors and Valuers, draftsmen, ministerial and inferior establishments under the Land Acquisition Collectors, Calcutta.	First Land Acquisition Collector, Calcutta.	First Land Acquisition Collector, Calcutta.	All .	Ditto.

Subordinate Horticultural Service in the Cinchona Department.	Superintendent, Cinchona Cultivation in Bengal.	Managers of Cinchona Plantations.	(i) to (v) ..	Superintendent, Cinchona Cultivation.
		Superintendent, Cinchona Cultivation.	(vi) and (vii) ..	Secretary to Government in the Department concerned.
Ministerial and inferior establishment in the Cinchona Department.	Ditto	Ditto	All ..	Ditto.
Office of the Director of Land Records and Surveys, Bengal.				
Ministerial establishment	Director of Land Records and Surveys, Bengal.	Director of Land Records and Surveys, Bengal.	All ..	Board of Revenue, Bengal.
Menial establishment	Ditto	Personal Assistant to Director of Land Records and Surveys, Bengal.	Al ..	Director of Land Records and Surveys, Bengal.
Bengal Traverse Party and Drawing Office				
Assistant Survey Officer	Ditto	Director of Land Records and Surveys, Bengal	All ..	Board of Revenue, Bengal.
Head Map Record-Keeper and Printing Supervisor ..	Ditto	Officer-in-charge, Bengal Traverse Party and Drawing Office.	(i) to (v) ..	Director of Land Records and Surveys, Bengal.
		Director of Land Records and Surveys, Bengal.	(vi) and (vii) ..	Board of Revenue, Bengal.

Title of service or post.	Authority empowered to appoint.	Authority empowered to impose penalties, and penalties which he may impose.		
		Authority.	Penalties (see rule 7)— (i) Censure. (ii) Withholding of increments, etc. (iii) Reduction to a lower post, etc. (iv) Recovery from pay, etc. (v) Suspension. (vi) Removal, etc. (vii) Dismissal, etc.	Appellate authority
1	2	3	4	5
Head Draftsman and Draftsman	Director of Land Records and Surveys, Bengal.	Officer-in-charge, Bengal Traverse Party and Drawing Office.	All	Director of Land Records and Surveys, Bengal.
Head Computors and Computors	Ditto	Ditto	All	Ditto.
Sub-Surveyors	Ditto	Ditto	All	Ditto.
Printers, Zinc-Correctors, etc.	Ditto	Ditto	All	Ditto.
Despatchers, Store-Keeper, Assistant Map Record-Keepers and other Technical hands in Bengal Drawing Office.	Ditto	Ditto	All	Ditto.
Menial establishmen	Ditto	Assistant Officer-in-charge, Bengal Traverse Party and Drawing Office.	(i) to (v) ..	Officer-in-charge, Bengal Traverse Party and Drawing Office.
		Officer-in-charge, Bengal Traverse Party and Drawing Office.	(vi) and (vii) ..	Director of Land Records and Surveys, Bengal.

Settlement Department.				
Settlement Kanungos	Director of Land Records and Surveys, Bengal.	Director of Land Records and Surveys, Bengal.	All ..	Member, Board of Revenue, Bengal.
Ministerial establishment (above Rs. 50) ..	Ditto	Settlement Officer ..	All ..	Director of Land Records and Surveys, Bengal.
Ministerial and Jobwork establishment on pay Rs. 50 and less.	Settlement Officer ..	Ditto	All ..	Ditto.
Office and Field menials	Ditto ..	Assistant Settlement Officers concerned.	All ..	Settlement Officer.
Board of Revenue, Bengal.				
Lower Division Ministerial establishment	Secretary, Board of Revenue	Secretary, Board of Revenue	All ..	Member, Board of Revenue, Bengal.
Upper Division Ministerial establishment ..	Ditto	Ditto	All ..	Ditto.
Menial establishment	Ditto	Ditto	All ..	Ditto.
Tahsildars, Overseers, Amins, Surveyor, etc., of the Khas Mahal Department.	Collector	Collector	All ..	Commissioners of Divisions.
Excluded area.				
Inspectors and Sub-Inspector of Vaccination, Chittagong Hill Tracts.	Director of Public Health, Bengal.	Director of Public Health, Bengal.	All	Secretary to Government in the Department concerned.

Education Department.

Title of service or post.	Authority empowered to appoint.	Authority empowered to impose penalties, and penalties which he may impose.		Appellate authority.
		Authority.	Penalties (*see* rule 7)— (i) Censure. (ii) Withholding of increments, etc. (iii) Reduction to a lower post, etc. (iv) Recovery from pay, etc. (v) Suspension. (vi) Removal, etc. (vii) Dismissal, etc.	
1	2	3	4	5
Subordinate Educational Service.				
I.—Teaching Branch.				
1. Scale Rs. 150—10—400 (Revised Rs. 125—350)—				
(i) Lecturers and Demonstrators of Colleges ..	Director of Public Instruction, Bengal.	Director of Public Instruction, Bengal.	All	Secretary to Government in the Department concerned.
(ii) Lecturers and Assistant Maulvis of Senior Madrasahs.	Ditto	Ditto	All	Ditto.
(iii) Head Assistant Teacher, Government School of Art, Calcutta.	Ditto	Ditto	All	Ditto.
(iv) Lecturers of Intermediate classes at Eden High School for Girls, Dacca.	Ditto	Ditto	All	Ditto.
2. Scale Rs. 150—10—400 (Revised Rs. 130—10/2—250)—				
Lecturers of Government Commercial Institute Calcutta.	Ditto	Ditto	All	Ditto.

Scale Rs. 170 (fixed)—				
Lecturers of Ahsanullah School of Engineering, Dacca.	Ditto	Ditto	All ..	Ditto.
4. Scale Rs. 180—10—250 (Revised Rs. 160—250)—				
Music Mistresses, Dow Hill Girls' School, Kurseong	Ditto	Ditto	All ..	Ditto.
5. Scale Rs. 150—10—250 (Revised Rs. 130—220)—				
(i) Assistant Headmasters and Mistresses and Head Kindergarten Mistress of Government High Schools (boys' and girls').	Ditto	Ditto	All ..	Ditto.
(ii) Assistant Headmasters and Assistant Superintendents of Training and Normal Schools (for male teachers).	Ditto	Ditto	All ..	Ditto.
(iii) Headmistresses of Vernacular Female Training Schools.	Ditto	Ditto	All ..	Ditto.
(iv) Physical Inspectress, Bethune College and Bethune Collegiate School.	Ditto	Ditto	All	Ditto.
6. Scale Rs. 125—5—250 (Revised Rs. 105—220)—				
Mathematical Assistant, Presidency College ..	Ditto	Ditto	All ..	Ditto.
7. Scale Rs. 100—10—250 (Revised Rs. 90—220)—				
(i) Assistant Maulvis of Calcutta Madrasah ..	Ditto	Ditto	All ..	Ditto.
(ii) Hindi Teacher, Victoria Boys' School, Kurseong	Ditto	Ditto	All ..	Ditto.
8. Scale Rs. 75—5—150—10—250 (Revised 75—220)—				
Assistant Teachers of Ahsanullah School of Engineering, Dacca.	Ditto	Governing Body of the Institution. Director of Public Instruction, Bengal.	(i), (iv) and (v) .. (ii), (iii), (vi) and (vii) ..	Director of Public Instruction, Bengal. Secretary to Government in the Department concerned.

Title of service or post.	Authority empowered to appoint.	Authority empowered to impose penalties, and penalties which he may impose.		Appellate authority.
		Authority.	Penalties (*see* rule 7)— (i) Censure. (ii) Withholding of increments, etc (iii) Reduction to a lower post, etc (iv) Recovery from pay, etc. (v) Suspension (vi) Removal, etc. (vii) Dismissal, etc.	
1	2	3	4	5
9. Pay Rs. 83 (fixed)—				
Assistant Teachers of Ahsanullah School of Engineering, Dacca.	Director of Public Instruction, Bengal.	Governing Body of the Institution. Director of Public Instruction, Bengal.	(i), (iv) and (v) .. (ii), (iii), (vi), and (vii) .	Director of Public Instruction, Bengal. Secretary to Government in the Department concerned.
10. Scale Rs. 100—5—200 (Revised Rs 90—175)—				
Teacher of Modelling, Government School of Art, Calcutta.	Ditto	Director of Public Instruction, Bengal.	All	Ditto.
11. Scale Rs 100—10—150 (Revised Rs 90—130)—				
(i) Assistant Mistresses of Vernacular Female Training Schools.	Ditto	Ditto	All	Ditto.
(ii) Assistant Kindergarten Mistress, Sakhawat Memorial Girl's High School, Calcutta.	Ditto	Ditto	All	Ditto.
12. Scale Rs. 75—5—200 (Revised Rs. 75—175)—				
(i) Assistant Masters (English, Engineering and Survey Teachers and Physical Instructors) of High Schools (for boys) and Training and Normal Schools (for males) under control of Divisional Inspectors of Schools.	Ditto	Divisional Inspectors of Schools Director of Public Instruction, Bengal.	(i), (iv) and (v) . (ii), (iii), (vi) and (vii) ..	Director of Public Instruction, Bengal. Secretary to Government in the Department concerned.

(ii) Headmasters of Middle English Schools (for boys) and Guru and Muallim Training Schools under control of Divisional Inspectors of Schools.	Ditto	Divisional Inspector of Schools	(i), (iv) and (v) ..	Director of Public Instruction, Bengal.
		Director of Public Instruction, Bengal.	(ii), (iii), (vi) and (vii) ..	Secretary to Government in the Department concerned.
(iii) Assistant Masters (English Teachers and Physical Instructors) of High Schools (for boys) and Training and Normal Schools (for males) under control of Principals of Colleges and Madrasahs.	Ditto	Principals of the Colleges and Madrasahs concerned.	(i), (iv) and (v) ..	Director of Public Instruction, Bengal.
		Director of Public Instruction, Bengal.	(ii), (iii), (vi) and (vii) ..	Secretary to Government in the Department concerned.
(iv) Headmasters of Middle English Schools (for boys) under control of Principals of Colleges and Madrasahs.	Ditto	Principals of Colleges and Madrasahs concerned.	(i), (iv) and (v) ..	Director of Public Instruction, Bengal.
		Director of Public Instruction, Bengal.	(ii), (iii) (vi) and (vii) ..	Secretary to Government in the Department concerned.
(v) Assistant Mistresses of High Schools (for girls) under control of Inspectresses of Girls' Schools	Ditto	Inspectresses of Girls' Schools ..	(i), (iv) and (v) ..	Director of Public Instruction, Bengal.
		Director of Public Instruction, Bengal.	(ii), (iii), (vi) and (vii) ..	Secretary to Government in the Department concerned.
(vi) Head Mistresses of Middle English Schools (for girls) under control of Inspectresses of Girls' Schools.	Ditto	Inspectresses of Girls Schools ..	(i), (iv) and (v) ..	Director of Public Instruction, Bengal.
		Director of Public Instruction, Bengal.	(ii), (iii), (vi) and (vii) ..	Secretary to Government in the Department concerned.
(vii) Assistant Mistresses of Bethune Collegiate School (under control of the Principal of Bethune College).	Ditto	Principal, Bethune College ..	(i), (iv) and (v) ..	Director of Public Instruction, Bengal.
		Director of Public Instruction, Bengal.	(ii), (iii), (vi) and (vii) ..	Secretary to Government in the Department concerned.
(viii) Assistant Mistresses (English and Music Teachers) of Eden High School for Girls, Dacca.	Ditto	Managing Committee of the Eden High School for Girls, Dacca.	(i), (iv) and (v) ..	Director of Public Instruction, Bengal.
		Director of Public Instruction, Bengal.	(ii), (iii), (vi) and (vii) ..	Secretary to Government in the Department concerned.
(ix) Laboratory Assistants, Physical Instructors and Drawing Masters of Colleges.	Ditto	Governing Bodies of the Colleges concerned.	(i), (iv) and (v) ..	Director of Public Instruction, Bengal.
		Director of Public Instruction, Bengal.	(ii), (iii), (vi) and (vii) ..	Secretary to Government in the Department concerned.
(x) Assistant Teachers (English and Arabic Teachers and Physical Instructors) of Senior Madrasahs.	Ditto	Governing Bodies of the Madrasahs concerned.	(i), (iv) and (v) ..	Director of Public Instruction, Bengal.
		Director of Public Instruction, Bengal.	(ii), (iii), (vi) and (vii) ..	Secretary to Government in the Department concerned.

Title of service or post.	Authority empowered to appoint.	Authority empowered to impose penalties, and penalties which he may impose.		Appellate authority
		Authority.	Penalties (*see* rule 7)— (*i*) Censure. (*ii*) Withholding of increments, etc. (*iii*) Reduction to a lower post, etc. (*iv*) Recovery from pay, etc. (*v*) Suspension. (*vi*) Removal, etc. (*vii*) Dismissal, etc.	
1	2	3	4	5
(*xi*) Assistant Teachers of Government School of Art, Calcutta.	Director of Public Instruction, Bengal.	Governing Body of Government School of Art, Calcutta.	(*i*), (*iv*) and (*v*) ..	Director of Public Instruction, Bengal
		Director of Public Instruction, Bengal.	(*ii*), (*iii*), (*vi*) and (*vii*) ..	Secretary to Government in the Department concerned.
(*xii*) Headmaster and Arabic Teacher of Dacca Junior Madrasah.	Ditto	Principal, Islamic Intermediate College, Dacca.	(*i*), (*iv*) and (*v*) ..	Director of Public Instruction, Bengal.
		Director of Public Instruction, Bengal.	(*ii*), (*iii*), (*vi*) and (*vii*) ..	Secretary to Government in the Department concerned
(*xiii*) Bengali Instructor, Sardah Police Training College (under control of Inspector of Schools, Rajshahi Division).	Ditto	Inspector of Schools, Rajshahi Division.	(*i*), (*iv*) and (*v*) ..	Director of Public Instruction, Bengal.
		Director of Public Instruction, Bengal.	(*ii*), (*iii*), (*vi*) and (*vii*) ..	Secretary to Government in the Department concerned
(*xiv*) Assistant Mistresses and Physical Instructress, Sakhawat Memorial Girls' High School, Calcutta.	Ditto	Ditto	All	Ditto.
13. Scale Rs 60—4—160 (Revised 60—140)—				
(*i*) Senior Classical Teachers (Pandits and Maulvis), Gymnastic and Drawing Masters of High Schools (for boys) and Training and Normal Schools under control of Divisional Inspectors of Schools.	Divisional Inspectors of Schools	Divisional Inspectors of Schools.	All	Director of Public Instruction, Bengal.

(iii) Senior Classical Teachers (Pandits and Maulvis), Gymnastic and Drawing Masters of High Schools (for boys) and Training and Normal Schools under control of Principals of Colleges and Madrasahs.	*Principals of Colleges and Madrasahs concerned.*	Principals of Colleges and Madrasahs concerned.	All	.. ..	Ditto.
(iii) Senior Classical Teachers (Pandits and Maulvis) of High Schools for girls under control of the Inspectresses of Girls' Schools.	*Inspectresses of Girls' Schools.*	Inspectresses of Girls' Schools	All	.. ..	Ditto.
(iv) Head Pandit of Bethune Collegiate School (under control of the Principal, Bethune College).	Principal, Bethune College ..	Principal, Bethune College ..	All	.. ..	Ditto.
(v) Head Maulvi, Eden High School for Girls, Dacca	Managing Committee, Eden High School for Girls, Dacca.	Managing Committee, Eden High School for Girls, Dacca.	All	.. ..	Ditto.
(vi) Gymnastic Masters of Colleges	Governing Bodies of the Colleges concerned.	Governing Bodies of the Colleges concerned.	All	.. ..	Ditto.
(vii) English and Arabic Teachers of Madrasahs (senior).	Governing Bodies of the Madrasahs.	Governing Bodies of the Madrasahs.	All	.. ..	Ditto.

Title of service or post.	Authority empowered to appoint.	Authority empowered to impose penalties, and penalties which he may impose.		Appellate authority.
		Authority.	Penalties (*see* rule 7)— (i) Censure. (ii) Withholding of increments, etc. (iii) Reduction to a lower post, etc. (iv) Recovery from pay, etc. (v) Suspension. (vi) Removal, etc. (vii) Dismissal, etc.	
1	2	3	4	5
(viii) English and Arabic Teachers of Dacca Junior Madrasahs (under control of the Principal, Islamic Intermediate College, Dacca).	Principal Islamic Intermediate College, Dacca.	Principal, Islamic Intermediate College, Dacca.	All	Director of Public Instruction, Bengal.
(ix) Senior Classical Teacher, Sakhawat Memorial Girls' High School, Calcutta.	Managing Committee of the School.	Managing Committee of the School.	All	Ditto
14. Scale Rs. 50—2—80—3—110 (Revised Rs. 50—100)				
(i) Drawing and Drill Masters, Manual Instructors and "B" Class teachers, Assistant Masters, English, Vernacular and Junior classical teachers of Government High and Middle English Schools (for boys) and Training and Normal Schools (for males) under the administrative control of Divisional Inspectors of Schools.	Divisional Inspectors of Schools	Divisional Inspectors of Schools	All	Ditto.
(ii) Assistant Mistresses and Vernacular teachers of High and Middle English Schools for Girls under the administrative control of the Inspectresses of Girls' Schools.	Inspectresses of Girl's Schools.	Inspectresses of Girls' Schools	All	Ditto.

(iii) Assistant Mistress of Vernacular Female Training School, Dacca.	Ditto	Ditto ..	All	Ditto.
(iv) Vernacular and Junior Classical Teachers and Drill and Drawing Masters of Hare and Hindu Schools.	Principal, Presidency College ..	Principal, Presidency College ..	All	Ditto.
(v) Vernacular and Junior Classical Teachers and Drill and Drawing Masters of Sanskrit Collegiate School.	Principal, Sanskrit College ..	Principal, Sanskrit College ..	All	Ditto.
(vi) Vernacular and Junior Classical Teachers and Drawing Master of Bethune Collegiate School.	Principal, Bethune College ..	Principal, Bethune College ..	All	Ditto.
(vii) Vernacular Teachers (Assistant Mistresses) of Eden High School for Girls, Dacca.	Managing Committee of the School.	Managing Committee of the School.	All ..	Ditto.
(viii) Vernacular and Junior Classical Teachers, Manual Instructor and Drawing Master of Ballyganj Government High School.	Principal, David Hare Training College.	Principal, David Hare Training College.	All	Ditto.
(ix) Vernacular Teacher and Drill Master, Calcutta Training School.	Ditto	Ditto	All	Ditto.
(x) English and Vernacular Teachers of Calcutta Model (Middle English) School.	Ditto	Ditto	All ..	Ditto.
(xi) Vernacular Teachers of Armanitola Government High School, Dacca.	Principal, Teachers' Training College, Dacca.	Principal, Teachers' Training College, Dacca.	All	Ditto.

Title of service or post	Authority empowered to appoint	Authority empowered to impose penalties, and penalties which he may impose.		Appellate authority.
		Authority	Penalties (*see* rule 7)— (i) Censure (ii) Withholding of increments, etc. (iii) Reduction to a lower post, etc (iv) Recovery from pay, etc. (v) Suspension. (vi) Removal, etc. (vii) Dismissal, etc.	
1	2	3	4	5
(xiii) Vernacular and Junior Classical Teachers and Drawing Master, Anglo-Persian Department, Calcutta Madrasah	Principal, Calcutta Madrasah.	Principal, Calcutta Madrasah	All .. .	Director of Public Instruction, Bengal.
(xiv) English and Vernacular Teachers of Woodburn Middle English school.	Ditto .. .	Ditto .. .	All .. .	Ditto.
(xv) English and Vernacular Teachers of Dacca Junior Madrasah.	Principal, Dacca Islamic Intermediate College	Principal, Dacca Islamic Intermediate College.	All	Ditto.
(xvi) Assistant Maulvis, English and Vernacular Teachers of Government Senior Madrasahs at Calcutta, Hooghly, Rajshahi and Chittagong.	Governing Bodies of the Madrashs	Governing Bodies of the Madrasahs	All	Ditto.
(xvii) Assistant Mistress, Vernacular Teachers, drawing Mistress and Junior Assistant Kindergarten-Mistresses of the Sakhawat Memorial Girl's High School	Managing Committee of the School	Managing Committee of the School	All ..	Ditto.
15. Scale Rs. 35—2—75—3—90 (Revised Rs 35—80)				
(i) Vernacular Teachers of Middle English Schools for boys, Guru Training and Burmese Schools.	Divisional Inspectors of Schools	Divisional Inspectors of Schools	All	Ditto.

(iii) Assistant (Vernacular) Mistresses of Middle English Schools for Girls and Practising Schools attached to Female Training Schools.	Inspectresses of Girl's Schools	Inspectresses of Girls' Schools	All		Ditto.
(iii) Vernacular Teachers of Calcutta Model (Middle English School).	Principal, David Hare Training College.	Principal, David Hare Training College.	All		Ditto.
(iv) Vernacular teachers of Woodburn Middle English School.	Principal, Calcutta Madrasah.	Principal, Calcutta Madrasah	All		Ditto.
(v) Vernacular Teachers of Dacca Junior Madrasahs	Principal, Dacca Islamic Intermediate College.	Principal, Dacca Islamic Intermediate College.	All		Ditto.
(vi) Vernacular Teachers of Rajshahi Madrasah ..	Governing Body of the Madrasah.	Governing Body of the Madrasah.	All		Ditto.
16. Scale Rs. 40—1—60 (Revised Rs. 40—60)—					
Wood Engraving Teacher, Government School of Art, Calcutta.	Governing Body of Government School of Art, Calcutta.	Governing Body of Government School of Art, Calcutta.	All		Ditto.
17. Officers holding temporary posts (non-ministerial) on Rs. 100 per mensem or above, in institutions, establishments or offices subordinate to the Director of Public Instruction, Bengal.	Director of Public Instruction, Bengal.	Director of Public Instruction, Bengal.	All		Secretary to Government in the Department concerned.
18. Officers holding temporary posts (non-ministerial) of Lecturers, English Teachers and Sub-Inspectors on less than Rs. 100 in institutions, offices or establishments, subordinate to the Director of Public Instruction, Bengal.	Ditto	Ditto	All ..	—	Ditto.

Title of service or post.	Authority empowered to appoint.	Authority empowered to impose penalties, and penalties which he may impose.		Appellate authority.
		Authority.	Penalties (*see* rule 7)— (i) Censure. (ii) Withholding of increments, etc. (iii) Reduction to a lower post, etc. (iv) Recovery from pay, etc. (v) Suspension. (vi) Removal, etc. (vii) Dismissal, etc.	
1	2	3	4	5
19. Officers holding temporary posts (non-ministerial) on less than Rs. 100 per mensem in institutions, offices or establishments subordinate to the Director of Public Instruction (except the posts of Lecturers, Sub-Inspectors or English Teachers).	Local controlling authorities subordinate to the Director of Public Instruction, Bengal.	Local controlling authorities subordinate to the Director of Public Instruction, Bengal.	All	Director of Public Instruction, Bengal.
20. Scale Rs. 50—2—70—3—100 (Revised Rs. 50—90)—				
Head Master, Reformatory and Industrial Schools, Alipore.	Managing Committee of the School.	Managing Committee of the School.	All	Ditto.
21. Scale Rs. 30—1—40—2—60 (Revised Rs. 30—60)—				
Assistant Teachers, Reformatory and Industrial Schools, Alipore.	Ditto	Ditto	All	Ditto.
22. Scale Rs. 30—1—40 (Revised 30—40)—				
Hindi Teacher, Reformatory and Industrial Schools, Alipore.	Ditto	Ditto	All	Ditto.
23. Pay Rs. 50 (fixed)—				
Part-time Drawing Master, David Hare Training College.	Governing Body of the David Hare Training College.	Governing Body of the David Hare Training College.	All	Ditto.

II.—Inspecting Branch.				
1. Scale Rs. 150—10—250 (Revised Rs. 130—220)—				
Subdivisional Inspectors of Schools ..	Director of Public Instruction, Bengal.	Director of Public Instruction, Bengal.	All	Secretary to Government in the Department concerned.
2. Scale Rs. 75—5—200 (Revised Rs. 75—175)—				
Sub-Inspectors of Schools	Ditto	Divisional Inspectors of Schools.	(i), (iv) and (v) ..	Director of Public Instruction, Bengal.
		Director of Public Instruction, Bengal.	(ii), (iii), (vi) and (vii).	Secretary to Government in the Department concerned.
3. Scale Rs. 35—2—75—3—90 (Revised Rs. 35—80)—				
Assistant Sub-Inspectors of Schools and Inspecting Maulvis.	Divisional Inspectors of Schools	Divisional Inspectors of Schools	.. ..	Director of Public Instruction, Bengal.
4. Officers holding temporary posts (non-ministerial) on Rs. 75 per mensem or above in institutions or offices subordinate to the Director of Public Instruction, Bengal.	Director of Public Instruction, Bengal.	Director of Public Instruction, Bengal.	All	Secretary to Government in the Department concerned.
5. Officers holding temporary posts (non-ministerial) on less than Rs. 75 per mensem in institutions or offices subordinate to the Director of Public Instruction.	Local controlling authorities subordinate to the Director of Public Instruction, Bengal.	Local controlling authorities subordinate to the Director of Public Instruction, Bengal.	All	Director of Public Instruction, Bengal.

Title of service or post.	Authority empowered to appoint.	Authority empowered to impose penalties, and penalties which he may impose.		Appellate authority.
		Authority	Penalties (see rule 7)— (i) Censure. (ii) Withholding of increments, etc. (iii) Reduction to a lower post, etc. (iv) Recovery from pay, etc. (v) Suspension. (vi) Removal, etc. (vii) Dismissal, etc.	
1	2	3	4	5
III.—Miscellaneous Branch.				
1. Scale Rs. 350—15—500 (Revised Rs 300—420)—				
Foreman Instructors, Bengal Engineering College and Ahsanulla School of Engineering, Dacca	Director of Public Instruction, Bengal.	Director of Public Instruction, Bengal.	All	Secretary to Government in the Department concerned.
2. Scale Rs. 300—10—400 (Revised Rs 260—345)—				
Lady Matron, Central Hospital attached to the Victoria Boys' and Dow Hill Girls' Schools, Kurseong	Ditto	Ditto	All	Ditto.
3. Scale Rs 180—10—260 (Revised Rs 160—230)—				
Steward, Victoria Boys' and Dow Hill Girls' Schools, Kurseong.	Ditto	Ditto	All	Ditto.
4. Scale Rs. 75—5—150—10—250 (Revised Rs 75—220)—				
Assistant Foreman Instructors, Ahsanullah School of Engineering, Dacca.	Ditto	Governing Body of the School.	(i), (iv) and (v) ..	Director of Public Instruction, Bengal.
		Director of Public Instruction, Bengal.	(ii), (iii), (vi) and (vii).	Secretary to Government in the Department concerned.

5. Rs. 88 (fixed)—				
Assistant Foreman, Instructors, Ahsanullah School of Engineering, Dacca.	Ditto ..	Governing Body of the School.	(i), (iv) and (v) ..	Director of Public Instruction, Bengal.
		Director of Public Instruction, Bengal.	(ii), (iii), (vi) and (vii).	Secretary to Government in the Department concerned.
6. Rs. 160—5—210 (Revised Rs. 140—185)—				
Nurses, Central Hospital attached to Victoria Boys' and Dow Hill Girls' Schools, Kurseong.	Ditto	Director of Public Instruction, Bengal.	All	Secretary to Government in the Department concerned.
7. Scale Rs. 160—5—200 (Revised Rs. 140—175)—				
Lady House-Keeper, Victoria Boys' and Dow Hill Girls' School, Kurseong.	Ditto	Ditto	All	Ditto.
8. Scale Rs. 150—10—200 (Revised Rs. 140—175—				
Assistant Foreman, Water Supply and Sewerage Works, Bengal Engineering College.	Ditto	Ditto	All	Ditto.
9. Scale Rs. 150—5—180 (Revised Rs. 130—160)—				
Matrons and House Mistresses in European Schools at Kurseong.	Ditto	Ditto	All	Ditto.
10. Scale Rs. 60—75—5—175 (Revised Rs. 60—75—5-2—80—10-2—100—5-2—155)—				
Sub-Assistant Surgeon Reformatory and Industrial Schools, Alipore.	Surgeon-General with the Government of Bengal.	Surgeon-General with the Government of Bengal.	All	Secretary to Government in the Department concerned.
11 Scale Rs. 75—5—150 (Revised Rs. 75—5-2—85—10-2—125)—				
Instructor in type-writing, Government Commercial Institute, Calcutta.	Director of Public Instruction, Bengal.	Director of Public Instruction, Bengal.	All	Secretary to Government in the Department concerned.

Title of service or post.	Authority empowered to appoint.	Authority empowered to impose penalties, and penalties which he may impose.		Appellate authority.
		Authority.	Penalties (*see* rule 7)— (*i*) Censure. (*ii*) Withholding of increments, etc. (*iii*) Reduction to a lower post, etc. (*iv*) Recovery from pay, etc. (*v*) Suspension. (*vi*) Removal, etc. (*vii*) Dismissal, etc.	
1	2	3	4	5
12. Scale Rs. 50—5—150 (Revised Rs. 50—130)—				
Non-teaching Assistants, Presidency College ..	Governing Body, Presidency College.	Governing Body, Presidency College.	All	Director of Public Instruction, Bengal.
13. Scale Rs. 75—5—125 (Revised Rs. 75—110)—				
Master Mechanic, Presidency College ..	Ditto	Ditto	All	Ditto.
14. Scale Rs. 60—4—120 (Revised Rs. 50—5-2—80—6-2—110)—				
Instructor in Type-writing, Government Commercial Institute, Calcutta.	Government Commercial Institute Board.	Government Commercial Institute Board.	All	Ditto.
15. Scale Rs. 60—4—80 (Revised Rs. 30—5-2—55)—				
Mechanic, Government Commercial Institute, Calcutta.	Ditto	Ditto	All	Ditto.

16. Scale Rs 60—2—80 (Revised Rs 60—4-2—80)—				
Carpenter Instructor, Victoria Boys' School, Kurseong	Governing Body of Victoria Boys' School.	Governing Body of Victoria Boys' School	All	Ditto
17 Scale Rs. 40—1—60 (Revised Rs 40—60)—				
(i) Turner Fitter and Coppersmith, Bengal Engineering College.	Governing Body, Bengal Engineering College	Governing Body, Bengal Engineering College	All	Ditto
(ii) Instrument-Keeper, Presidency College .	Governing Body, Presidency College	Governing Body, Presidency College	All .	Ditto
18. Scale Rs 30—1—50 (Revised Rs 30—50)—				
(i) Carpenter, Presidency College .	Ditto	Ditto	All	Ditto
(ii) Turner and Fitter, Bengal Engineering College ..	Governing Body, Bengal Engineering College	Governing Body, Bengal Engineering College	All	Ditto
(iii) Carpenter-Instructor Dacca Collegiate School	Inspector of Schools, Dacca Division	Inspector of Schools, Dacca Division.	All	Ditto
(iv) Mechanic Rajshahi College ..	Governing Body, Rajshahi College	Governing Body, Rajshahi College	All	Ditto
(v) Carpenter, Government School of Art, Calcutta	Governing Body, Government School of Art, Calcutta.	Governing Body Government School of Art, Calcutta	All	Ditto.
19. Scale Rs 35—1—40 (Revised Rs 35—40)—				
(i) Compounder, Central Hospital attached to the Victoria Boys and Dow Hill Girls Schools, Kurseong	Inspector of European Schools, Bengal	Inspector of European Schools, Bengal.	All	Ditto
(ii) Fitter Ahsanullah School of Engineering, Dacca	Governing Body, Ahsanullah School of Engineering, Dacca	Governing Body, Ahsanullah School of Engineering, Dacca	All	Ditto

Title of service or post.	Authority empowered to appoint.	Authority empowered to impose penalties, and penalties which he may impose.			Appellate authority.
		Authority.	Penalties (*see* rule 7)— (i) Censure. (ii) Withholding of increments, etc. (iii) Reduction to a lower post, etc. (iv) Recovery from pay, etc. (v) Suspension. (vi) Removal, etc. (vii) Dismissal, etc.		
1	2	3	4		5
20. Scale Rs. 30—1—40 (Revised Rs. 30—40)—					
(i) Mechanic, Presidency College	Governing Body, Presidency College.	Governing Body, Presidency College.	All	.. ..	Director of Public Instruction, Bengal.
(ii) Compounder, Rajshahi College	Governing Body, Rajshahi College.	Governing Body, Rajshahi College.	All	.. ..	Ditto.
(iii) Compounder, Bengal Engineering College ..	Governing Body, Bengal Engineering College.	Governing Body, Bengal Engineering College.	All	.. ..	Ditto.
(iv) Compounder, Eden High School for Girls, Dacca	Managing Committee, Eden High School.	Managing Committee, Eden High School.	All	.. ..	Ditto.
(v) Compounder, Nawab Bahadur's Institution, Murshidabad.	Inspector of Schools, Presidency Division.	Inspector of Schools, Presidency Division.	All	.. ..	Ditto.
(vi) Tinsmith and Blacksmith Instructors, Reformatory and Industrial Schools, Alipore.	Committee of Management and Control of the Reformatory and Industrial Schools Alipore.	Committee of Management and Control of the Reformatory and Industrial Schools, Alipore	All	.. ..	Ditto.

21. Scale Rs. 30—1—40—1—50 (Revised Rs. 30—50)—				
Tailoring and Carpenter Instructors, Reformatory and Industrial Schools, Alipore.	Committee of Management and Control of the Reformatory and Industrial Schools, Alipore.	Ditto	All	Ditto.
22. Scale Rs. 30—1—40 (Revised Rs. 30—1—40)—				
Mechanic, Hooghly College	Governing Body, Hooghly College.	Governing Body, Hooghly College.	All	Ditto.
23. Scale Rs. 32—1—37 (Revised 32—37)—				
Mason, Ahsanullah School of Engineering, Dacca ..	Governing Body, Ahsanullah School of Engineering, Dacca.	Governing Body, Ahsanullah School of Engineering, Dacca.	All	Ditto.
24. Scale Rs. 35 (fixed) (Revised Rs. 32)—				
Turner, Ahsanullah School of Engineering, Dacca ..	Ditto	Ditto	All	Ditto.
25 Scale Rs. 25—1—35 (Revised Rs. 25—35)—				
(i) Matron, Eden High School for Girls, Dacca ..	Managing Committee, Eden High School for Girls, Dacca.	Managing Committee, Eden High School for Girls, Dacca.	All	Ditto.
(ii) Weaving Instructor, Reformatory and Industrial Schools, Alipore.	Committee of Management and Control of the, Reformatory and Industrial Schools, Alipore.	Committee of Management and Control of the Reformatory and Industrial Schools, Alipore.	All	Ditto.
(iii) Matron, Vidyamoyee High School for Girls, Mymensingh.	Inspectress of Schools, Dacca Circle.	Inspectress of Schools, Dacca Circle.	All	Ditto.

Title of service or post.	Authority empowered to appoint.	Authority empowered to impose penalties, and penalties which he may impose.		Appellate authority.
		Authority.	Penalties (*see* rule 7)— (*i*) Censure. (*ii*) Withholding of increments, etc. (*iii*) Reduction to a lower post, etc. (*iv*) Recovery from pay, etc. (*v*) Suspension. (*vi*) Removal, etc. (*vii*) Dismissal, etc.	
1	2	3	4	5
(*iv*) Matron, Bethune College	Governing Body, Bethune College.	Governing Body, Bethune College.	All	Director of Public Instruction, Bengal.
(*v*) Matron, Bethune Collegiate School ..	Principal, Bethune College ..	Principal, Bethune College ..	All	Ditto.
(*vi*) Matron, Vernacular Female Training School, Dacca.	Inspectress of Schools, Dacca Circle.	Inspectress of Schools, Dacca Circle.	All	Ditto.
(*vii*) Matrons, Dr. Khastagir's High School, Chittagong, and Faizunnessa Girls' High School, Comilla.	Ditto	Ditto	All	Ditto.
(*viii*) Book-binder, Reformatory and Industrial Schools, Alipore.	Committee of Management and Control of the Reformatory and Industrial Schools, Alipore.	Committee of Management and Control of the Reformatory and Industrial Schools, Alipore.	All	Ditto.
(*ix*) Matron, Sakhawat Memorial Girls' High School.	Managing Committee of the School.	Managing Committee of the School.	All	Ditto.
26. Scale Rs. 30 (fixed)—				
(*i*) Electricians, Presidency College	Governing Body, Presidency College.	Governing Body, Presidency College.	All	Ditto.
(*ii*) Mistry, Dacca Intermediate College ..	Governing Body, Dacca Intermediate College.	Governing Body, Dacca Intermediate College.	All	Ditto.

(iii) Carpenter, Smith and Moulder, Ahsanullah School of Engineering, Dacca.	Governing Body, Ahsanullah School of Engineering, Dacca.	Governing Body, Ahsanullah School of Engineering, Dacca.	All	Ditto.
(iv) Matron, Moslem Female Training School, Calcutta.	Inspectress of Schools, Presidency and Burdwan Division.	Inspectress of Schools, Presidency and Burdwan Divisions.	All	Ditto.
(v) Mechanic, Krishnagar College	Governing Body, Krishnagar College.	Governing Body, Krishnagar College.	All	Ditto.
27. Scale Rs. 25—1—30 (Revised Rs. 25—30)—Atalique, Nawab Bahadur's Institution, Murshidabad.	Inspector of Schools, Presidency Division.	Inspector of Schools, Presidency Division.	All	Ditto.
28. Scale Rs. 20—1—30 (Revised Rs. 20—30)—				
(i) Gasman, Rajshahi College	Governing Body, Rajshahi College.	Governing Body, Rajshahi College.	All	Ditto.
(ii) Compounder, Krishnagar College	Governing Body, Krishnagar College.	Governing Body, Krishnagar College.	All	Ditto.
(iii) Compounder, Hooghly College	Governing Body, Hooghly College.	Governing Body, Hooghly College.	All	Ditto.
29. Scale Rs. 20—1—25 (Revised Rs. 20—25)—				
Section Cutter, Presidency College	Governing Body, Presidency College.	Governing Body, Presidency College.	All	Ditto.
30. Scale Rs. 40 (fixed)—				
Mechanic, Chittagong College	Governing Body, Chittagong College.	Governing Body, Chittagong College.	All	Ditto.
31. Officers holding temporary posts (non-ministerial) on Rs. 100 per month or above in institutions or offices subordinate to the Director of Public Instruction, Bengal.	Director of Public Instruction, Bengal.	Director of Public Instruction, Bengal.	All	Secretary to Government in the Department concerned.
32. Officers holding temporary posts (non-ministerial) on less than Rs. 100 per month in institutions or offices subordinate to the Director of Public Instruction, Bengal.	Local controlling authorities subordinate to the Director of Public Instruction, Bengal.	Local controlling authorities subordinate to the Director of Public Instruction, Bengal.	All	Director of Public Instruction, Bengal.

Title of service or post.	Authority empowered to appoint.	Authority empowered to impose penalties, and penalties which he may impose.		Appellate authority.
		Authority.	Penalties (see rule 7)— (i) Censure. (ii) Withholding of increments, etc. (iii) Reduction to a lower post, etc. (iv) Recovery from pay, etc. (v) Suspension. (vi) Removal, etc. (vii) Dismissal, etc.	
1	2	3	4	5
IV.—Ministerial Branch.				
1. Scale Rs. 250—10—350 (Revised Rs. 220—300)—				
Personal Assistant to the Principal, Bengal Engineering College.	Director of Public Instruction, Bengal.	Director of Public Instruction, Bengal.	All	Secretary to Government in the Department concerned.
2. Scale Rs. 150—10—250 (Revised Rs. 130—220)—				
(i) Head Clerk, Bengal Engineering College ..	Ditto	Ditto	All	Ditto.
(ii) Head Clerk, Presidency College	Ditto	Ditto	All	Ditto.
3. Scale Rs. 125—10—225 (Revised Rs. 110—200)—				
Head Clerks, Divisional Inspectors of Schools (including Inspector of European Schools, Bengal).	Ditto	Ditto	All	Ditto.
4. Scale Rs. 100—5—125—10—225 (Revised Rs. 90—200)—				
Accountant, Bengal Engineering College ..	Ditto	Ditto	All	Ditto.
5. Scale Rs. 125—5—150—10—200 (Revised Rs. 110—175)—				
Librarian, Presidency College	Ditto	Ditto	All	Ditto

6. Scale Rs. 100—5—200 (Revised Rs. 90—175)—								
Head Clerks, European Schools at Kurseong ..	Ditto		Ditto		All		Ditto.	
7. Scale Rs. 125—5—175 (Revised Rs. 110—155)—								
(i) Accountant, Presidency College	Ditto		Ditto		All		Ditto.	
(ii) Head Reader, Bengal Library	Ditto		Ditto		All		Ditto.	
(iii) Head Clerks, Islamia and Sanskrit Colleges and Calcutta Madrasah.	Ditto		Ditto		All		Ditto.	
8. Scale Rs. 80—5—175 (Revised Rs. 80—155)—								
(i) Shorthand Typist, Presidency College ..	Governing Body of the College		Governing Body of the College		All		Director of Public Instruction, Bengal.	
(ii) Shorthand Typist, Inspector of Schools, Presidency Division.	Inspector of Schools, Presidency Division.		Inspector of Schools, Presidency Division.		All		Ditto.	
9. Scale Rs. 50—165 (Revised Rs. 50—145)—								
Draftsman, Bengal Engineering College ..	Governing Body of the College		Governing Body, Bengal Engineering College.		All		Ditto.	
10. Scale Rs. 125—5—150 (Revised Rs. 110—130)—								
Librarians, Calcutta Madrasah and Sanskrit College.	Director of Public Instruction, Bengal.		Director of Public Instruction, Bengal.		All		Secretary to Government in the Department concerned.	
11. Scale Rs. 100—5—150 (Revised Rs. 90—130)—								
(i) Head Clerks of Government Arts Colleges ..	Governing Bodies		Governing Bodies		All		Director of Public Instruction, Bengal.	
(ii) Head Clerk, Ahsanullah School of Engineering	Governing Body		Governing Body		All		Ditto.	
(iii) Head Clerk, Government Commercial Institute, Calcutta.	Commercial Institute Board.		Commercial Institute Board ..		All		Ditto.	
12. Scale Rs. 100—5—120 (Revised Rs. 90—110)—								
(i) Cashier and Second Clerk, Presidency College ..	Governing Body		Governing Body		All		Ditto.	
(ii) Second Clerk, Bengal Engineering College ..	Ditto		Ditto		All		Ditto.	

Title of service or post.	Authority empowered to appoint.	Authority empowered to impose penalties, and penalties which he may impose.		Appellate authority.
		Authority.	Penalties (*see* rule 7)— (i) Censure. (ii) Withholding of increments, etc. (iii) Reduction to a lower post, etc. (iv) Recovery from pay, etc. (v) Suspension. (vi) Removal, etc. (vii) Dismissal, etc.	
1	2	3	4	5
13. Scale Rs. 90—5—120 (Revised Rs. 80—105)—				
Second Clerks, Divisional Inspectors of Schools including Inspector of European Schools, Bengal.	Divisional Inspectors of Schools and Inspector of European Schools, Bengal.	Divisional Inspectors of Schools and Inspector of European Schools, Bengal.	All	Director of Public Instruction, Bengal.
14. Scale Rs. 80—5—120 (Revised Rs. 80—105)—				
Head Clerks, Islamic Intermediate College and Dacca Intermediate College.	Governing Bodies	Governing Bodies	All	Ditto.
15. Scale Rs. 90—4—120 (Revised Rs. 80—105)—				
(i) Head Clerk, David Hare Training College ..	Governing Body	Governing Body	All	Ditto
(ii) Librarians, Hooghly, Krishnagar, Rajshahi and Chittagong Colleges.	Governing Bodies ..	Governing Bodies ..	All	Ditto.
(iii) Head Clerks, Inspectresses of Schools ..	Inspectresses of Schools.	Inspectresses of Schools ..	All	Ditto.
(iv) Head Clerk, Teachers' Training College ..	Governing Body	Governing Body	All	Ditto.
v) Head Clerk, Government School of Arts, Calcutta	Director of Public Instruction, Bengal.	Director of Public Instruction Bengal.	All	Ditto.

16. Scale Rs. 45—120 (Revised Rs. 45—105)—				
Assistant Clerk, Bengal Library	Ditto	Librarian, Bengal Library ..	(i), (iv) and (v) ..	Ditto.
		Director of Public Instruction, Bengal.	(ii), (iii), (vi) and (vii).	Secretary to Government in the Department concerned.
17. Scale Rs. 80—4-2—100 (Revised Rs. 80—2-2—90)—				
Accountants, Chittagong and Rajshahi Colleges ..	Governing Bodies	Governing Bodies	All	Director of Public Instruction, Bengal.
18. Scale Rs. 75—5—100 (Revised Rs. 75—5-2—90)—				
(i) Assistant Superintendent, Hindu Students' Mess, Bengal Engineering College.	Governing Body of the College	Governing Body of the College	All	Ditto.
(ii) Steward, Eden Hindu Hostel attached to the Presidency College	Ditto	Ditto	All	Ditto.
(iii) Librarians, Bengal Engineering, Dacca Intermediate, Bethune and Islamic Intermediate Colleges.	Ditto	Ditto	All	Ditto.
(iv) Cashier and Assistant Clerk, Islamia College ..	Ditto	Ditto	All	Ditto.
(v) Cashier, Bengal Engineering College ..	Ditto	Ditto	All	Ditto.
19. Scale Rs. 60—4—100 (Revised Rs. 60—90)—				
(i) Assistant Readers, Bengal Library	Director of Public Instruction, Bengal.	Librarian, Bengal Library ..	(i), (iv) and (v) ..	Director of Public Instruction, Bengal.
		Director of Public Instruction, Bengal.	(ii), (iii), (vi) and (vii).	Secretary to Government in the Department concerned.
(ii) Second Clerk and Cashier, Calcutta Madrasah	Governing Body of the Madrasah.	Governing Body of the Madrasah.	All	Director of Public Instruction, Bengal.

Title of service or post.	Authority empowered to appoint.	Authority empowered to impose penalties, and penalties which he may impose.		Appellate authority.
		Authority.	Penalties (*see* rule 7)— (i) Censure. (ii) Withholding of increments, etc. (iii) Reduction to a lower post, etc. (iv) Recovery from pay, etc. (v) Suspension. (vi) Removal, etc. (vii) Dismissal, etc.	
1	2	3	4	5
20. Scale Rs. 40—100 (Revised Rs. 40—90)—				
(i) Assistant Clerks, Bengal Library	Director of Public Instruction, Bengal.	Librarian, Bengal Library ..	(i), (iv) and (v) ..	Director of Public Instruction, Bengal.
		Director of Public Instruction, Bengal.	(ii), (iii), (vi) and (vii).	Secretary to Government in the Department concerned.
(ii) Clerks and Assistant Librarians, Presidency College.	Governing Body of the College	Governing Body of the College	All	Director of Public Instruction, Bengal.
(iii) Assistant Clerk, Bengal Engineering College ..	Ditto ..	Ditto	All	Ditto.
21. Scale Rs. 85 (fixed) (Revised Rs. 80)—				
Clerk and Accountant, Ahsanullah School of Engineering, Dacca.	Governing Body ..	Governing Body ..	All	Ditto.
22. Scale Rs. 40—85 (Revised Rs. 40—80)—				
(i) Assistant Clerks, Divisional Inspectors of Schools including Inspector of European Schools, Bengal.	Divisional Inspector of Schools and Inspector of European Schools, Bengal.	Divisional Inspector of Schools and Inspector of European Schools, Bengal.	All	Ditto.
(ii) Assistant Clerk, Librarian and Store-keeper, Government School of Art, Calcutta.	Governing Body	Governing Body ..	All	Ditto

(iii) Clerks and Librarians, Sanskrit and Bethune Colleges.	Governing Bodies of the Colleges	Governing Bodies of the Colleges	All	.. ..	Ditto.
(iv) Store-keepers, Presidency College ..	Governing Body of the College.	Governing Body of the College.	All	.. ..	Ditto.
(v) Clerk, Reformatory and Industrial Schools, Alipore.	Managing Committee of the Schools.	Managing Committee of the Schools	All	.. ..	Ditto.
(vi) Clerk, Islamia College	Governing Body of the College	Governing Body of the College	All	.. ..	Ditto.
23. Scale Rs. 35—80 (Revised Rs. 35—80)—					
(i) Clerks, Government High Schools under the control of Divisional Inspectors of Schools.	Divisional Inspectors of Schools	Divisional Inspectors of Schools	All	.. ..	Ditto.
(ii) Clerks, Eden High School for Girls, Dacca and Sakhawat Memorial Girls' High School.	Managing Committees of the Schools.	Managing Committees of the Schools.	All	.. ..	Ditto.
(iii) Clerks, Ahsanullah School of Engineering, Dacca	Governing Body of the School	Governing Body of the School	All	.. ..	Ditto.
(iv) Clerks, Inspectresses of Schools	Inspectresses of Schools ..	Inspectresses of Schools ..	All	.. ..	Ditto.
(v) Clerks of Government High Schools for Girls ..	Ditto	Ditto	All	.. ..	Ditto.
(vi) Clerks of Government Training and Arts Colleges	Governing Bodies of the Colleges	Governing Bodies of the Colleges	All	.. ..	Ditto.
(vii) Clerks of High and Training Schools under the control of Principals of Colleges and Madrassahs.	Principals of the Colleges and Madrassahs concerned.	Principals of the Colleges and Madrassahs concerned.	All	.. ..	Ditto.
(viii) Clerks of Normal and Training Schools under the control of Divisional Inspectors of Schools.	Divisional Inspectors of Schools	Divisional Inspectors of Schools	All	.. ..	Ditto.
(ix) Clerks of Calcutta Madrassah	Governing Body of the Madrassah.	Governing Body of the Madrassah.	All	.. ..	Ditto.
(x) Clerks, Rajshahi, Hooghly and Chittagong Madrassahs.	Governing Bodies of the Madrassahs.	Governing Bodies of the Madrassahs.	All	.. ..	Ditto.
(xi) Clerks of Ahsanullah School of Engineering, Dacca.	Governing Body of the School	Governing Body of the School	All	.. ..	Ditto.

Title of service or post.	Authority empowered to appoint.	Authority empowered to impose penalties, and penalties which he may impose.		Appellate authority.
		Authority.	Penalties (see rule 7)— (i) Censure. (ii) Withholding of increments, etc. (iii) Reduction to a lower post, etc. (iv) Recovery from pay, etc. (v) Suspension. (vi) Removal, etc. (vii) Dismissal, etc.	
1	2	3	4	5
24. Scale Rs. 45—5-2—70 (Revised Rs. 45—70)—				
(i) Typists of Divisional Inspectors of Schools and Inspector of European Schools, Bengal.	Divisional Inspectors of Schools and Inspector of European Schools, Bengal.	Divisional Inspectors of Schools and Inspector of European Schools, Bengal.	All	Director of Public Instruction, Bengal.
(ii) Typists of Colleges	Governing Bodies of the Colleges	Governing Bodies of the Colleges	All	Ditto.
(iii) Typist of Calcutta Madrasah	Governing Body of the Madrasah.	Governing Body of the Madrasah.	All	Ditto.
(iv) Typists, Inspectresses of Schools	Inspectresses of Schools ..	Inspectresses of Schools ..	All	Ditto.
(v) Typist, Government Commercial Institute ..	Commercial Institute Board	Commercial Institute Board ..	All	Ditto.
25. Scale Rs. 64 (fixed)—				
Additional Clerk, Ahsanullah School of Engineering, Dacca.	Governing Body of the School	Governing Body of the School	All	Ditto.
26. Rs. 60 (fixed)—				
Librarian and Draftsman, Ahsanullah School of Engineering, Dacca.	Ditto	Ditto	All	Ditto.

27. Scale Rs. 40—2—60 (Revised Rs. 40—4-2—60)—					
Clerks of European Schools, Kurseong ..	Governing Bodies of the Schools	Governing Bodies of the Schools	All	Inspector of European Schools, Bengal.
28. Scale Rs. 40—1—60 (Revised Rs. 40—2-2—60)—					
(i) Store-keepers, Ahsanullah School of Engineering, Dacca.	Governing Body of the School	Governing Body of the School	All	Director of Public Instruction, Bengal.
(ii) Store-keeper, Bengal Engineering College ..	Governing Body of the College	Governing Body of the College	All	Ditto.
29. Scale Rs. 35—60 (Revised 35—60)—					
(i) Clerks to the Subdivisional Inspectors of Schools and Divisional Inspectors of Schools.	Divisional Inspectors of Schools	Divisional Inspectors of Schools	All	Ditto.
(ii) Clerks to the Assistant Inspectresses of Schools.	Inspectresses of Schools	Inspectresses of Schools ..	All	Ditto.
(iii) Clerks to the District Inspectors of Schools ..	Divisional Inspectors of Schools	Divisional Inspectors of Schools	All	Ditto.
30. Scale Rs. 40—1—45—					
Store-keeper, Eden Hindu Hostel ..	Governing Body of the Presidency College.	Governing Body of the Presidency College.	All	Ditto.
31. Scale Rs. 35—1—45—					
Clerk, Moslem Female Training School ..	Inspectress of Schools	Inspectress of Schools ..	All	Ditto
32. Scale Rs. 30 (fixed)—					
Junior Store Clerk, Ahsanullah School of Engineering, Dacca.	Governing Body of the School	Governing Body of the School	All	Ditto.
33. Scale Rs. 300—10—350 (Revised Rs. 260—300)—					
Upper Division Assistants, Director of Public Instruction's Office.	Director of Public Instruction, Bengal.	Director of Public Instruction, Bengal.	All	Secretary to Government in the Department concerned.

Title of service or post.	Authority empowered to appoint.	Authority empowered to impose penalties, and penalties which he may impose.		Appellate authority.
		Authority.	Penalties (*see* rule 7)— (i) Censure. (ii) Withholding of increments, etc. (iii) Reduction to a lower post, etc. (iv) Recovery from pay, etc. (v) Suspension. (vi) Removal, etc. (vii) Dismissal, etc.	
1	2	3	4	5
34. Scale Rs. 250—10—300 (Revised Rs. 230—280)— Upper Division Assistants, Director of Public Instruction's office.	Director of Public Instruction, Bengal.	Director of Public Instruction, Bengal.	All	Secretary to Government in the Department concerned.
35. Scale Rs. 125—10—225 (Revised Rs. 110—200)— Upper Division Assistants, Director of Public Instruction's office (including Assistant Director of Public Instruction for Muhammadan Education, Bengal's staff).	Ditto	Ditto	All	Ditto.
36. Scale Rs. 45—45—50—3—80—2—110—5—120 (Revised 45—105)— Lower Division Assistants, Director of Public Instruction's office (including Assistant Director of Public Instruction for Muhammadan Education, Bengal's staff).	Ditto	Ditto	All	Ditto.
37. Scale Rs 80—5—175 (Revised Rs. 80—155)— Shorthand-Typists, Director of Public Instruction's office.	Ditto	Ditto	All	Ditto.
38. Scale Rs. 45—5-2—100 (Revised Rs. 45—90)— Typists, Director of Public Instruction's office.	Ditto	Ditto	All	Ditto.
39. Scale Rs. 45—5-2—70 (Revised Rs. 45—5-2—70)— Typists and Typist Despatchers, Director of Public Instruction's office (including Assistant Director of Public Instruction for Muhammadan Education, Bengal's staff).	Ditto	Ditto	All	Ditto.

40.	Scale Rs. 40—40—45—2—65—2—85 (Revised Rs. 40—4-2—68—3-2—80)—							
	Clerks, Provincial Text-Book Committee	..	Ditto	Ditto	All	Ditto.
41.	Scale Rs. 80—5—175 (Revised Rs. 80—155)—							
	Shorthand-Typist, Physical Director's office	..	Ditto	Ditto	All	Ditto.
42.	Officers holding temporary ministerial appointments on Rs. 100 per month or above in institutions or offices subordinate to the Director of Public Instruction, Bengal.		Ditto	Ditto	All	Ditto.
43.	Officers holding temporary ministerial posts on less than Rs. 100 per month in institutions or offices subordinate to the Director of Public Instruction, Bengal.		Local Controlling authorities subordinate to the Director Public Instruction, Bengal.	Local Controlling authorities subordinate to the Director Public Instruction, Bengal.	All	Director of Public Instruction, Bengal.
44.	Officers holding temporary ministerial posts on Rs. 100 per month or above in the office of the Director of Public Instruction, Bengal.		Assistant Director of Public Instruction, Bengal.	Assistant Director of Public Instruction, Bengal.	All	Ditto.
45.	Officers holding temporary ministerial posts on Rs. 100 per month or less in the office of the Director of Public Instruction, Bengal.		Ditto	Ditto	All	Ditto.
	V. Menial establishment.					
1.	Establishment menials in offices subordinate to the Director of Public Instruction, Bengal.		Local controlling authorities subordinate to the Director of Public Instruction, Bengal.	Local controlling authorities subordinate to the Director of Public Instruction, Bengal.	All	Ditto.
2.	Establishment menials in the office of the Director of Public Instruction, Bengal (including Record Duftaries).		Assistant Director of Public Instruction, Bengal.	Assistant Director of Public Instruction, Bengal.	All	Ditto.
3.	Establishment menials in the office of the Assistant Director of Public Instruction for Muhammadan Education, Bengal.		Assistant Director of Public Instruction for Muhammadan Education, Bengal.	Assistant Director of Public Instruction for Muhammadan Education, Bengal.	All	Ditto.
4.	Temporary establishment menials in offices subordinate to the Director of Public Instruction, Bengal.		Local controlling authorities subordinate to the Director of Public Instruction, Bengal.	Local controlling authorities subordinate to the Director of Public Instruction, Bengal.	All	Ditto.
5.	Temporary establishment menials in the office of the Director of Public Instruction, Bengal.		Assistant Director of Public Instruction, Bengal.	Assistant Director of Public Instruction, Bengal.	All	Ditto.

Registration Department.

Title of service or post.	Authority empowered to appoint.	Authority empowered to impose penalties, and penalties which he may impose.		Appellate authority.
		Authority.	Penalties (*see* rule 7)— (i) Censure. (ii) Withholding of increments, etc. (iii) Reduction to a lower post, etc. (iv) Recovery from pay, etc. (v) Suspension. (vi) Removal, etc. (vii) Dismissal, etc.	
1	2	3	4	5
Inspector of Registration Offices, Bengal	Government	Inspector-General of Registration.	(i)	Secretary to Government in the Department concerned.
		Government	(ii) to (vii)	The order of Government is final.
Personal Assistant to the Inspector-General of Registration.	Government	Inspector-General of Registration.	(i) to (iv)	Secretary to Government in the Department concerned.
		Government	(v) to (vii) ..	The order of Government is final.
Sub-Registrar of Calcutta	Government	Inspector-General of Registration.	(i) to (iv)	Secretary to Government in the Department concerned.
		Government	(v) to (vii) ..	The order of Government is final.

District Sub-Registrars	Government	Inspector-General of Registration.	(i) to (iv)	Secretary to Government in the Department concerned
		Government	(v) to (vii) ..	The order of Government is final.
Sub-Registrars	Government	Inspector-General of Registration.	(i) to (iv)	Secretary to Government in the Department concerned.
		Government	(v) to (viii) ..	The order of Government is final.
Office of the Inspector-General of Registration, Bengal.				
Ministerial and inferior Establishment .. .	Inspector-General of Registration.	Inspector-General of Registration.	All ..	Secretary to Government in the Department concerned.
Office of the Registrar of Assurances and Sub-Registrar of Calcutta.				
Ministerial and inferior Establishment	Registrar of Assurances, Calcutta.	Registrar of Assurances, Calcutta.	All .. .	Inspector-General of Registration.
Sadar and Mufasil Registration offices.				
Ministerial and inferior Establishment .. .	District Registrar	District Registrar .	All .. .	Inspector-General of Registration.

Revenue (Forests) Department.

Title of service or post.	Authority empowered to appoint	Authority empowered to impose penalties, and penalties which he may impose.		Appellate authority.
		Authority.	Penalties (see rule 7)— (i) Censure (ii) Withholding of increments, etc. (iii) Reduction to a lower post, etc. (iv) Recovery from pay, etc (v) Suspension. (vi) Removal, etc. (vii) Dismissal, etc.	
1	2	3	4	5
1. Rangers' Service	Conservator of Forests ..	Divisional Forest Officers ..	(i), (ii), (iv) and (v) ..	Conservator of Forests.
		Conservator of Forests ..	(vi), (vi) and (vii) ..	Secretary to Government in the Department concerned.
2. Deputy Rangers' Service	Divisional Forest Officers ..	Divisional Forest Officers ..	All	Conservator of Forests.

3.	Foresters' Service	..	Ditto	..	Ditto	..	All	..	Ditto.
4.	Forest Guards' Service	..	Ditto	..	Ditto	..	All	..	Ditto.
5.	Lower Division clerks in the Divisional Forest offices.		Ditto	..	Ditto	..	All	..	Ditto.
6.	Head clerks in the Divisional Forest offices and clerks in the office of the Conservator of Forests.		Conservator of Forests	..	Conservator of Forests	..	All	..	Secretary to Government in the Department concerned.
7.	Menials in Divisional Forest offices and in offices subordinate to them.		Divisional Forest Officers	..	Divisional Forest Officers	..	All	..	Conservator of Forests.
8	Menials in Conservator of Forests' office	..	Conservator of Forests	..	Conservator of Forests	..	All	..	Secretary to Government in the Department concerned.

Local Self-Government (Public Health) Department.

Title of service or post.	Authority empowered to appoint.	Authority empowered to impose penalties, and penalties which he may impose.		Appellate authority.
		Authority.	Penalties (see rule 7)— (i) Censure. (ii) Withholding of increments, etc. (iii) Reduction to a lower post, etc. (iv) Recovery from pay, etc. (v) Suspension. (vi) Removal, etc. (vii) Dismissal, etc.	
1	2	3	4	5
Offices under the Director of Public Health.				
1. Ministerial appointments including Steno-typist and draftsman.	Director of Public Health, Bengal.	Director of Public Health, Bengal.	All ..	Secretary to Government in the Department concerned.
2. Assistant Publicity Officers, mechanic and mechanic operators.	Ditto ..	Ditto ..	All ..	Ditto.
3. Special Inspectors of Vaccination ..	Ditto ..	Ditto ..	All ..	Ditto.
4. Assistant Surgeons ..	Ditto ..	Ditto ..	All ..	Ditto.
5. Assistant Malariologist ..	Ditto ..	Ditto ..	All ..	Ditto.
6. Sub-Assistant Surgeons ..	Ditto ..	Ditto ..	All ..	Ditto.
7. Laboratory Assistants ..	Ditto ..	Ditto ..	All ..	Ditto.

8. Surveyors	:	Ditto	:	Ditto	:	All	Ditto.
9. Depot Assistants	:	Ditto	:	Ditto	:	All	Ditto.
10. Bacteriologists	:	Ditto	:	Ditto	:	All	Ditto.
11. Glass Blowers	:	Ditto	:	Ditto	:	All	Ditto.
12. Assistant Analysts	:	Ditto	:	Ditto	:	All	Ditto.
13. Demonstrators	:	Ditto	:	Ditto	:	All	Ditto.
14. Store-keeper	:	Ditto	:	Ditto	:	All	Ditto.
Office of the Chief Engineer, Public Health Department.							
1. Ministerial establishment	:	Chief Engineer, Public Health Department, Bengal.	:	Chief Engineer, Public Health Department, Bengal.	:	All	Secretary to Government in the Department concerned.
2. Supervisors	:	Ditto	:	Ditto	:	All	Ditto.
3. Overseers	:	Ditto	:	Ditto	:	All	Ditto.
4. Sub-Overseers	:	Ditto	:	Ditto	:	All	Ditto.

Medical Department.

Title of service or post.	Authority empowered to appoint.	Authority empowered to impose penalties and penalties which he may impose.		Appellate authority.
		Authority.	Penalties (*see* rule 7)— (i) Censure. (ii) Withholding of increments, etc. (iii) Reduction to a lower post, etc. (iv) Recovery from pay, etc. (v) Suspension. (vi) Removal, etc. (vii) Dismissal, etc.	
1	2	3	4	5
1. Bengal Medical Service (Lower) ..	Surgeon-General, Bengal ..	Surgeon-General, Bengal ..	All ..	Secretary to Government in the Department concerned.
2. Superintendent, Swarnomoyee Hostel ..	Head of the Institution ..	Head of the Institution ..	All ..	Surgeon-General, Bengal.
3. Nursing Superintendents ..	Ditto ..	Ditto ..	All ..	Ditto.
4. Clerks and typists in Surgeon-General's office	Surgeon-General, Bengal ..	Surgeon-General, Bengal ..	All ..	Secretary to Government in the Department concerned.
5. Clerks in Civil Surgeon's office ..	Ditto ..	Head of the office ..	(i) to (v) ..	Surgeon-General, Bengal.
		Surgeon-General, Bengal ..	(vi) and (vii) ..	Secretary to Government in the Department concerned.

6.	Clerks in Medical Schools ..	Ditto ..	Superintendent of the School Surgeon-General, Bengal ..	(i) to (v) .. (vi) and (vii) ..	Surgeon-General, Bengal. Secretary to Government in the Department concerned.
7.	Lady Doctors, Nurses, Midwives, Matrons of Government Hospitals.	Superintendent of the Hospital	Superintendent of the Hospital	All ..	Surgeon-General, Bengal.
8.	Stewards and Ward Masters of Hospitals ..	Ditto ..	Ditto ..	All ..	Ditto.
9.	Clerks, diet clerks, typists, librarians, artists, Media-makers, laboratory assistants in Medical College, School of Tropical Medicine.	Head of the Institution ..	Head of the Institution ..	All ..	Ditto.
10.	Clerks, diet clerks, typists, cashiers, store-keepers, compounders, dressers of hospitals and in Bhowanipore Mental Observation Ward.	Ditto ..	Ditto ..	All ..	Ditto.

Revenue (Excise) Department.

Title of service or post.	Authority empowered to appoint.	Authority empowered to impose penalties, and penalties which he may impose.		Appellate authority.
		Authority.	Penalties (*see* rule 7)— (*i*) Censure. (*ii*) Withholding of increments, etc. (*iii*) Reduction to a lower post, etc. (*iv*) Recovery from pay, etc. (*v*) Suspension. (*vi*) Removal, etc. (*vii*) Dismissal, etc.	
1	2	3	4	5
1. Sub-Inspectors of Excise and Salt	Commissioner of Excise and Salt, Bengal.	Collectors	(*i*) to (*v*)	Commissioner of Excise and Salt, Bengal.
		Commissioner of Excise and Salt, Bengal.	(*vi*) and (*vii*) ..	Secretary to Government in the Department concerned.
2. Petty officers of Excise and Salt	Ditto	Superintendents and Inspectors-in-charge.	(*i*) to (*v*)	Collector.
		Commissioner of Excise and Salt, Bengal.	(*vi*) and (*vii*) ..	Secretary to Government in the Department concerned.
3. Peons of district establishment	Superintendents and Inspectors-in-charge.	Superintendents and Inspectors-in-charge.	All ..	Collector.

4.	Launch crews	Ditto	Ditto	All ..	Ditto
5.	Boatmen	Ditto	Ditto	All ..	Ditto.
6.	Manjhis and Serangs	Collectors	Ditto	(i) to (v) ..	Ditto.
			Collectors	(vi) and (vii) ..	Commissioner of Excise and Salt, Bengal.
7.	Ministerial establishment of Excise Commissioner's office.	Commissioner of Excise and Salt, Bengal.	Personal Assistant to Commissioner.	(i) to (v) ..	Ditto.
			Commissioner of Excise and Salt, Bengal.	(vi) and (vii) ..	Secretary to Government in the Department concerned.
8.	Menial establishment of Excise Commissioner's office	Personal Assistant to Commissioner.	Personal Assistant to Commissioner.	All ..	Commissioner of Excise and Salt, Bengal.
9.	Ministerial establishment of the Collector of Excise, Calcutta.	Collector of Excise, Calcutta ..	Collector of Excise, Calcutta ..	All ..	Ditto.

Public Works Department.

Title of service or post.	Authority empowered to appoint.	Authority empowered to impose penalties, and penalties which he may impose.		Appellate authority.
		Authority.	Penalties (*see* rule 7)— (i) Censure. (ii) Withholding of increments, etc. (iii) Reduction to a lower post, etc. (iv) Recovery from pay, etc. (v) Suspension. (vi) Removal, etc. (vii) Dismissal, etc.	
1	2	3	4	5
I.—Technical Staff.				
1. Upper Subordinate posts (including the Electrical Upper Subordinate under the Superintendent, Governor's Estate, Bengal)	Chief Engineer	Chief Engineer	All	Secretary to Government in the Department concerned.
2. Subordinate Engineering Service (including Electrical Overseers).	Ditto	Superintending Engineer ..	(i) to (v)	Chief Engineer.
		Chief Engineer	(vi) to (vii) ..	Secretary to Government in the Department concerned.
3. Lower Subordinate Service (including Electrical Lower Subordinates).	Ditto	Superintending Engineer ..	(i) to (v)	Chief Engineer.
		Chief Engineer	(vi) and (vii) ..	Secretary to Government in the Department concerned
4. Inspector of Lightning Conductors	Ditto	Superintending Engineer, Electrical Circle.	(i) to (iv) ..	Chief Engineer.
		Chief Engineer	(v) to (vii) ..	Secretary to Government in the Department concerned.

5. Superintendent, Government House Gardens, Bengal	Military Secretary to the Governor, Bengal.	Superintendent, Governor's Estate, Bengal.	(i) to (iv)	..	Military Secretary to the Governor, Bengal.
		Military Secretary to the Governor, Bengal.	(v) to (vii) ..	..	Secretary to Government in the Department concerned.
6. Sub-Assistant Surgeon, Public Works Department Dispensary at Teesta, Darjeeling.	Superintending Engineer, Northern Circle.	Superintending Engineer, Northern Circle.	All ..	..	Chief Engineer.
7. Caretaker, Imperial Secretariat Buildings, Calcutta	Manager, Government of India Press, Calcutta.	Manager ..	All ..	..	Ditto.
8. Caretaker, Writers' Buildings	Chief Engineer	Chief Engineer ..	All ..	..	Secretary to Government in the Department concerned.
9 Fire Inspector for Central Government Buildings at Calcutta.	Ditto	Superintending Engineer, Presidency Circle.	(i) to (iv)	..	Chief Engineer.
		Chief Engineer	(v) to (vii)		Secretary to Government in the Department concerned.
II.—Secretariat Office.					
Inferior staff.					
1. Duftries, jamadars and peons	Assistant Secretary to Government.	Assistant Secretary to Government.	All ..	..	Secretary to Government in the Department concerned.

Title of service or post.	Authority empowered to appoint.	Authority empowered to impose penalties, and penalties which he may impose.		Appellate authority.
		Authority.	Penalties (see rule 7)— (i) Censure. (ii) Withholding of increments, etc. (iii) Reduction to a lower post, etc. (iv) Recovery from pay, etc. (v) Suspension. (vi) Removal, etc. (vii) Dismissal, etc.	
1	2	3	4	5
III.—Chief Engineer's Office.				
Superior staff.				
1. Superintendent, Draftsmen and Estimators in Drawing Branch and Stenographer.	Chief Engineer	Chief Engineer	All	Secretary to Government in the Department concerned.
Inferior staff.				
1. Litho and Ferro Printers, Duftries and Peons in Drawing Branch.	Personal Assistant to Chief Engineer.	Personal Assistant to Chief Engineer.	All	Chief Engineer.
2. Durwans and Farashes of Writers' Buildings ..	Assistant Secretary to Government.	Assistant Secretary to Government.	All ..	Secretary to Government in the Public Works Department.
3. Sweepers, Bhisties and Malis of Writers' Buildings ..	Caretaker, Writers' Buildings.	Caretaker Writers Buildings	All	Assistant Secretary to Government in the Public Works Department.

IV.—Offices of Superintending Engineers.				
Superior staff.				
1. Assistants, Typists, Draftsmen, Estimators and Tracers.	Superintending Engineer ..	Superintending Engineer ..	All	Chief Engineer.
Inferior staff.				
1. Record Supplies, Duftries, Blue Printers, Peons and Durwans.	Superintending Engineer ..	Superintending Engineer ..	All	Chief Engineer.
V.—Offices of the Executive Engineers and Subdivisional offices under them.				
Superior staff.				
1. Clerks, Typists, Draftsmen, Tracers, Estimators, Unpassed Accounts Clerks, Store-keepers and Cashiers.	Superintending Engineer ..	Executive Engineer ..	(*i*) to (*iv*) ..	Superintending Engineer.
		Superintending Engineer ..	(*v*) to (*vii*) ..	Chief Engineer.
2. Subdivisional Clerks, Godown-keepers, Store Clerks, Cash Sarkars, Toll Collectors, Assistant Toll Collectors.	Executive Engineer ..	Executive Engineer ..	All	Superintending Engineer.
3. Passed Accounts Clerks	Accountant-General, Bengal ..	Deputy Accountant-General, Bengal.	(*i*) and (*ii*) ..	Accountant-General, Bengal.
		Accountant-General, Bengal ..	(*ii*), (*iii*), (*v*) to (*vii*) ..	Secretary to Government in the Department concerned.
4. Operator and Assistant Operator of the Cooling Plant in the Legislative Council Chamber.	Executive Engineer, Western Electrical Division.	Executive Engineer ..	(*i*) to (*v*)	Chief Engineer.
		Superintending Engineer, Electrical Circle.	(*vi*) and (*vii*) ..	Ditto.
Inferior staff.				
1. Duftries, Peons, Blue Printers, Durwans, Chowkidar, Burkandazes, Tindals, Liftmen and Pumpmen.	Executive Engineer ..	Executive Engineer ..	All	Superintending Engineer.

Title of service or post.	Authority empowered to appoint.	Authority empowered to impose penalties, and penalties which he may impose.		Appellate authority.
		Authority.	Penalties (see rule 7)— (i) Censure. (ii) Withholding of increments, etc. (iii) Reduction to a lower post, etc. (iv) Recovery from pay, etc. (v) Suspension. (vi) Removal, etc. (vii) Dismissal, etc.	
1	2	3	4	5
VI.—Office of the Government Architect, Bengal.				
Superior staff.				
Clerks, Draftsmen, Estimators and Tracers ..	Government Architect or Assistant Government Architect.	Government Architect or Assistant Government Architect.	All	Chief Engineer.
Inferior staff.				
Peons	Government Architect or Assistant Government Architect.	Government Architect or Assistant Government Architect.	All	Chief Engineer.

VII.—Office of the Superintendent, Governor's Estates, Bengal and Subdivisional offices under it.					
Superior staff.					
Clerks, Typists, Estimator, Draftsman, Unpassed Accounts Clerk, Cashier, Store-keeper, Malis, Tinsmith and Blacksmith.	Superintendent, Governor's Estates, Bengal.		Superintendent, Governor's Estates, Bengal.	All	Chief Engineer.
Inferior staff.					
1. Duftries, Chowkidars and Peons.	Superintendent, Governor's Estates, Bengal.		Superintendent, Governor's Estates, Bengal.	All	Chief Engineer.

E. N. BLANDY,
Chief Secy. to the Govt. of Bengal (offg.).

Reforms.

NOTIFICATIONS.

No. 5266 A. R. D.—8th September 1936.—The following communique relating to the publication of the draft electoral rolls for the Water Transport Trade Union constituency and the Railway Trade Union constituency of the Bengal Legislative Assembly, and the method of submitting claims and objections thereto, is published for general information and guidance.

R. N. GILCHRIST,

Reforms Commr. and Joint Secy. (ex-officio) to the Govt. of Bengal.

COMMUNIQUE.

The preparation of the electoral rolls for the Water Transport Trade Union constituency and the Railway Trade Union constituency of the Bengal Legislative Assembly has now been completed, and the rolls will be published in draft on the 15th September 1936. Although the rolls have been prepared from the materials furnished by the constituent trade unions and every effort has been made to make the rolls as complete and as accurate as possible, persons who consider themselves qualified to be included in the electoral roll of the Railway Trade Union constituency and the constituent trade unions forming the Water Transport Trade Union constituency are advised to inspect the rolls when published, to see if their names or the names of their nominees, as the case may be, are included. If such names are not entered, or if there are any inaccuracies in the entries, the persons or the trade unions in question are advised to prefer claims for inclusion of names in the rolls, or submit objections to entries which may be inaccurate or wrong.

2. For purposes of representation in the Bengal Legislative Assembly the following unions have been certified to be constituent trade unions:—

I. Registered trade unions of railway workers.

(1) Kanchrapara Railway Workmen's Union.

(2) E. B. Railway Indian Employees' Association.

(3) Bengal Nagpur Railway Indian Labour Union.

(4) E. I. Railway Employees' Association.

(5) Railway Press Workers' Union.

II. Registered trade unions of water transport workers.

(1) Indian Seamen's Union.

(2) Bengal Mariners' Union, with which the I. M. and W. U. is amalgamated.

Members and officials of the constituent trade unions of railway workers named above and nominees of the constituent trade unions of water transport workers named above who possess the respective qualifications prescribed in paragraphs 19 and 20 of Part IV of the Government of India (Provincial Legislative Assemblies) Order, 1936, are entitled to registration of names in the rolls.

3. The rolls will be published in draft at the office of the Registrar of Trade Unions, Bengal, the Registering Authority and the Returning Officer of the constituencies, and also at the registered office of each constituent trade union.

4. Claims and objections must be preferred in prescribed forms and in the manner provided in Part III of the Bengal Legislative Assembly Electoral (Preparation, Revision and Publication of Electoral Rolls) Rules, 1936. All such claims and objections must be addressed and presented personally or by agent authorised in writing or sent by post to the Revising Authorities, whose names are given in notices with which the rolls are published. In the case of the Water Transport Trade Union constituency a claim may be preferred only by the Secretary or by an agent authorised in writing by such Secretary, of the constituent trade union concerned and by no other person.

5. The last date for submission of claims and objections is the 29th September 1936. Applications received after this date will not be entertained.

6. The forms on which claims and objections may be made can be obtained free of charge from the office of the Registrar of Trade Unions, Bengal, the office of the constituent trade unions, and also from the Reforms Office, Writers' Buildings, Calcutta. If any claims or objections are not submitted in prescribed forms they are liable to be rejected. There is, however, no objection to applications being made on typed forms if printed forms are not available.

7. All necessary particulars regarding the qualifications of electors, the method of publication and revision of rolls and the prescribed forms for claims and objections have been embodied in the Bengal Electoral Orders and Rules, copies of which can be purchased at four annas a copy from the Bengal Government Press (Publication Branch), 38, Gopalnagar Road, Alipore, or the Sales Office, Writers' Buildings, Calcutta.

No. 5328 A. R. D.—9th September 1936.—In exercise of the power conferred by paragraph 4 of Part I of the Government of India (Provincial Legislative Assemblies) Order, 1936, read with paragraph 26 of Part I of that Order, and of all powers enabling him in that behalf, the Governor of Bengal in Council is pleased to direct that for the purpose of constituting the Legislative Assembly of the Province the electoral rolls for the Calcutta and the Dacca University constituencies shall be made up by reference to the 1st of October 1936.

R. N. GILCHRIST,

Reforms Commr. and Joint Secy. (ex-officio) to the Govt. of Bengal.

POLITICAL DEPARTMENT.

Political.

NOTIFICATIONS.

No. 1032P.D. — 10th September 1936. — In pursuance of section 61 of the Cantonments Act, 1924 (II of 1924), the Governor in Council is pleased to give notice of his intention to impose under section 60 of the said Act a tax on the trades and professions carried on by the following classes of persons within the limits of the Lebong Cantonment according to the rates laid down in the table given below. The said tax shall be payable annually by every such person:—

Classes of persons carrying on trades, etc.	Fees per annum.
	Rs.
(1) Retail shopkeepers in Bazar area ...	5
(2) Wholesale and retail shopkeepers in Bazar area ...	10
(3) Washerman ...	2
(4) Fortune-tellers ...	2
(5) Tailors and shoemakers ...	2
(6) Photographers ...	5
(7) Tatoo-wallah ...	5
(8) Pedlar, vendor of goods in boxes, hawkers or box-wallah ...	2
(9) Dyer or cleaners ...	5
(10) Itinerant dealer hawking goods for sale in basket and tray ...	1
(11) Owner of any rickshaw, pony, Dandies which is let out on hire ...	2

II. Any objections or suggestion with regard to the said proposal which may be received by the undersigned through the Cantonment Authority, Lebong, from any inhabitant of the said Cantonment within thirty days from the date of this notification will be considered by the local Government.

No. 1063P.D.—12th September 1936. — The following draft of a notification, which it is proposed to issue under sub-section (*1*) of section 7 of the Port Haj Committees Act, 1932 (XX of 1932), is published as required by sub-section (*1*) of section 23 of the said Act for information of all persons likely to be affected thereby, and notice is hereby given that the draft will be taken into consideration by the Governor in Council on or after the 10th October 1936.

Any objection or suggestion which may be sent to the Chief Secretary to the Government of Bengal by any person with respect to the said draft on or before the aforesaid date will be considered by the Governor in Council:—

Draft notification.

In exercise of the powers conferred by sub-section (*1*) of section 7 of the Port Haj Committees Act, 1932 (XX of 1932), the Governor in Council is pleased to make the following amendments in the Calcutta Port Haj Committee Rules, 1933, published with notification No. 13604P., dated the 2nd December 1933:—

In rule 3 of the said rules—

(*1*) paragraph 1 shall be numbered as sub-rule (*1*) and paragraph 2 shall be numbered as sub-rule (*2*), and

(*2*) in sub-rule (*2*) as so numbered for the words "Registrar, Political Department" the words "Secretary to the Bengal Legislative Council" shall be substituted.

E. N. BLANDY,

Chief Secy. to the Govt. of Bengal (offg.).

JUDICIAL DEPARTMENT.

No. 10807A.

Powers.

Tippera.—No. 10736A. — 11th September 1936.—Mr. M. A. T. Iyengar, I.C.S., Joint Magistrate, Chandpur, Tippera, is vested with the power to try summarily the offences mentioned in section 260 of the Code of Criminal Procedure.

E. N. BLANDY,
Chief Secy. to the Govt. of Bengal (offg.).

Appointments and Transfers.

Mymensingh.—No. 6886J.—11th September 1936.—Babu Sushil Chandra Mukharji, probationary munsif, is appointed to be an additional munsif (on training) at Netrokona, in the district of Mymensingh.

Leave.

Bakarganj.—No. 6829J—21st August 1936.—Babu Pramatha Nath Lahiri, munsif of Barisal, in the district of Bakarganj, is allowed leave on average pay for seven days, under rules 81 (*b*) (*ii*) and 82 (*b*) of the Fundamental Rules, in extension of the leave granted to him under the orders of the 10th July 1936.

Burdwan.—No. 6830J.—24th August 1936.—Babu Aditya Chandra Datta, munsif of Burdwan (Sadar), is allowed leave on average pay up to the 29th August 1936, under rules 81 (*b*) (*ii*) and 82 (*b*) of the Fundamental Rules, in extension of the leave granted to him under the orders of the 1st August 1936.

Mymensingh.—No. 6831 J.—25th August 1936.—Babu Achintya Kumar Sen Gupta, munsif of Netrokona, in the district of Mymensingh, is allowed earned leave for twenty-one days, under rules 10 and 14 (*a*) of the Bengal Services (Revision of Leave) Rules, 1934, with effect from the 20th August 1936.

Hooghly.—No. 6832 J.—25th August 1936.—Babu Sarat Chandra Ray-chaudhuri, munsif of Serampore, in the district of Hooghly, is allowed leave on average pay, on medical certificate for the period from the 12th August to the 10th October 1936, under the proviso to rule 81 (*b*) (*ii*) of the Fundamental Rules, in extension of the leave granted to him under the orders of the 2nd July 1936.

Noakhali.—No. 6833J.—26th August 1936.—Babu Syamadas Chatarji, munsif of Sudharam, in the district of Noakhali, is allowed leave on average pay for the period from the 24th August to the 13th October 1936, under rules 81 (*b*) (*ii*) and 82 (*b*) of the Fundamental Rules. He is also permitted to affix the civil court vacation of 1936 to the leave, under rule 82 (*d*) of those rules.

Dacca.—No. 6834 J.—28th August 1936.—Babu Niranjan Banarji, munsif of Narainganj, in the district of Dacca, is allowed leave on average pay, for nine days, under rules 81 (*b*) (*ii*) and 82 (*b*) of the Fundamental Rules, with effect from the 5th October 1936. He is also permitted to affix the civil court vacation of 1936 to the leave, under rule 82 (*d*) of those rules.

Faridpur.—No. 6835 J.—29th August 1936.—Babu Charu Chandra Gangali, munsif of Bhanga, in the district of Faridpur, is allowed leave on average pay for the period from the 17th November to the 23rd December 1936, under rules 81 (*b*) (*ii*) and 82 (*b*) of the Fundamental Rules. He is also permitted to prefix the civil court vacation of 1936 to the leave, under rule 82 (*d*) of those rules.

24-Parganas.—No. 6836 J.—29th August 1936.—Babu Shailendra Nath Chatarji, munsif of Sealdah, in the district of the 24-Parganas, is allowed leave on average pay, for the period from the 20th to the 25th August 1936, under rules 81 (*b*) (*ii*) and 82 (*b*) of the Fundamental Rules, in extension of the leave granted to him under the orders of the 19th August 1936.

No. 6791J. — 8th September 1936.—Babu Jatindra Kumar Basu, Subordinate Judge, is allowed leave on half average pay for the period from the 5th August 1936 to the 31st December 1936, under Fundamental Rule 81 (*d*) in extension of the leave already granted to him.

NOTIFICATIONS.

Rangpur.—No. 6786 J.—8th September 1936.—In exercise of the power conferred by section 65 of the Bengal Village Self-Government Act, 1919 (Bengal Act V of 1919), the Governor in Council is pleased to appoint Babu Birendra Nath Bakshi, a member of the Kurigram union board within the Kurigram police-station and subdivision of the Rangpur district, to be, during his term of office as such member, a member of the union bench within the jurisdiction of the said union board for the purposes of that section, *vice* Babu Satish Chandra Bakshi, deceased.

Rangpur.—No. 6787 J.—8th September 1936.—In exercise of the power conferred by section 73 of the Bengal Village Self-Government Act, 1919 (Bengal Act V of 1919), the Governor in Council is pleased to appoint Babu Birendra Nath Bakshi, a member of the Kurigram union board within the Kurigram police-station and subdivision of the Rangpur district, to be, during his term of office as such member, a member of the union court within the jurisdiction of the said union board for the purposes of that section, *vice* Babu Satis Chandra Bakshi, deceased.

Faridpur.—No. 6921J. — 11th September 1936.—In exercise of the power conferred by section 65 of the Bengal Village Self-Government Act, 1919 (Bengal Act V of 1919), the Governor in Council is pleased to appoint Munshi Md. Sadat Ali Bhuian, a member of the Chhaygaon union board within the Bhedorganj police-station in the Madaripur subdivision of the Faridpur district, to be, during his term of office as such member, a member of the union bench within the jurisdiction of the said union board for the purposes of that section.

Faridpur.—No. 6922J. — 11th September 1936.—In exercise of the power conferred by section 73 of the Bengal Village Self-Government Act, 1919 (Bengal Act V of 1919), the Governor in Council is pleased to appoint Munshi Md. Sadat Ali Bhuian, a member of the Chhaygaon union board within the Bhedorganj police-station in the Madaripur subdivision of the Faridpur district, to be, during his term of office as such member, a member of the union court within the jurisdiction of the said union board for the purposes of that section.

ERRATUM.

No. 6928J.—12th September 1936. — In paragraph (*a*) of the notification No. 6347J., dated the 20th August 1936, published at page 2012, Part I of the *Calcutta Gazette*, dated the 27th August 1936, *insert* "Babu" before "Satya Kinkar Sarkar."

N. G. A. EDGLEY,
Secy. to the Govt. of Bengal.

LOCAL SELF-GOVERNMENT DEPARTMENT.

NOTIFICATIONS.

Minister-in-charge: The Hon'ble Sir Bijoy Prasad Singh Roy, Kt.

Bakarganj. — No. 7203L.S.-G. — 14th September 1936.—In exercise of the power conferred by clauses (*a*) and (*b*) of section 31 of the Cattle Trespass Act, 1871 (Act I of 1871), and in modification of the orders contained in clauses (*a*) and (*b*) of notification No. 317½ T.M., dated the 16th August 1913, and in clauses (*a*) and (*b*) of notification No. 1428L.S.-G., dated the 18th May 1914, the Government of Bengal (Ministry of Local Self-Government) are pleased to—

(*a*) transfer to the union board, in the district of Bakarganj, named below all the functions of the Magistrate of that district, under Chapters II and III of the said Act I of 1871, in respect of all pounds within the jurisdiction of the said union board, and

(*b*) direct that the whole of the surplus accruing under section 18 of the said Act I of 1871, in the area under the jurisdiction of the union board in the district of Bakarganj, named below, shall be placed to the credit of the union fund constituted for the said union board:—

Pirojpur subdivision, district Bakarganj.

Police-station Mathbaria.

Mathbaria union board.

No. 7207M.—14th September 1936.—In exercise of the power conferred by sub-section (*l*) of section 483 of the Calcutta Municipal Act, 1923 (Bengal Act III of 1923), and on the recommendation of the Corporation of Calcutta, the Government of Bengal (Ministry of Local Self-Government) are pleased to make the following amendments in the rules contained in Schedule XIX of the said Act:—

Amendments.

In item No. (8) in Schedule XIX to the Calcutta Municipal Act, 1923 (Bengal Act III of 1923)—

(*i*) *after* the words and brackets "cotton (other than cotton pressed into bales), or cotton refuse or seed," *insert* the word "*dal*,";

(*ii*) *after* the word "grain," *insert* the words "gram, ground-nut,";

(*iii*) *after* the word "gunpowder," *insert* the word "gur,";

(*iv*) *after* the word "molasses," *insert* the word "mustard-seeds,";

(*v*) *after* the words "pakra seed," *insert* the word "pea,"; and

(*vi*) *after* the word "rags," *insert* the word "rice,".

Notification No. 1159M., dated the 16th February 1934, published at page 317, Part I, of the *Calcutta Gazette* of the 23rd idem, is hereby cancelled.

Medical.

Minister-in-charge: The Hon'ble Sir Bijoy Prasad Singh Roy, Kt.

Calcutta.—No. 3621Medl.—10th September 1936.—Lt.-Col. J. C. De, I.M.S., Superintendent, Campbell Medical School and Hospital, Calcutta, is granted leave on average pay for the period from the 18th September to the 17th October 1936, under rule 81(*b*)(*ii*) of the Fundamental Rules.

Murshidabad-Calcutta.—No. 3622Medl.—10th September 1936.—Lt.-Col. P. Banerji, I.M.S., Civil Surgeon, Murshidabad, on relief, is appointed to act, until further orders, as Superintendent, Campbell Medical School and Hospital, Calcutta, *vice* Lt.-Col. J. C. De, I.M.S., granted leave.

Calcutta.—No. 3649Medl.—12th September 1936.—Lt.-Col. S. A. McSwiney, I.M.S., officiating Professor of Obstetrics, Medical College, Calcutta, is granted combined leave for two years, with effect from the 13th October 1935, viz., leave on average pay for eight months and in continuation leave on half average pay for one year and four months, under rules 81(*b*)(*i*) and 81(*d*) of the Fundamental Rules, respectively.

2. This department's notification No. 2938-Medl., dated the 10th July 1936, is hereby cancelled.

Calcutta.—No. 1T. Medl.—11th September 1936.—Dr. Biraj Mohan Das Gupta, Assistant Professor of Protozoology, School of Tropical Medicine, Calcutta, was appointed to act as Professor of Protozoology in that institution, in addition to his own duties, for the period from the 15th to the 31st July 1936, during the absence, on leave, of Lt.-Col. R. Knowles, I.M.S., deceased.

NOTIFICATION.

Minister-in-charge: The Hon'ble Sir Bijoy Prasad Singh Roy, Kt.

No. 3659 Medl.—14th September 1936.—The following draft of an amendment, which, in exercise of the power conferred by section 459A of the Bengal Municipal Act, 1932 (Bengal Act XV of 1932), and clause (*k*) of section 138 of the Bengal Local Self-Government Act of 1885 (Bengal Act III of 1885), the Government of Bengal (Ministry of Local Self-Government) propose to make in the rules published with notification No. 138 T. Medl., dated the 7th June 1915, as subsequently amended, is published for the information of persons likely to be affected thereby.

2. The draft will be taken into consideration on or after the 15th November 1936 and any objections or suggestions received by the undersigned through the District Officers before that date will be duly considered:—

Draft Amendment.

In rule 50 (*iii*) of the said rules after the words "very short period" in line 3 insert the words "not exceeding seven days at a time."

Public Health.

NOTIFICATIONS.

Minister-in-charge: The Hon'ble Sir Bijoy Prasad Singh Roy, Kt.

No. 3598P.H.—12th September 1936.—The following draft of rules which, in exercise of the powers conferred by clauses (*n*) and (*nl*) of section 138 of the Bengal Local Self-Government Act, 1885 (Bengal Act III of 1885), the Government of Bengal (Ministry of Local Self-Government) propose to make are published for the information of persons likely to be affected thereby.

2. The draft will be taken into consideration on or after the 15th November 1936, and any objection or suggestion received by the undersigned through the District Magistrates before that date, will be duly considered:—

Draft rules for the control of malaria and other mosquito-borne diseases.

1. In an area in which the Local Government has ordered that anti-mosquito operations shall be taken up by the district board it shall be lawful for the district board to stock larvicidal fish in any tank, well, reservoir or other water collection which, in the opinion of the district board appears to be injurious to health, whenever such a step is decided upon by the district board as an anti-mosquito measure.

2. Whenever the admission of silt-laden flood water into tanks, ponds and other water collections is deemed necessary as an anti-mosquito measure in an area in which the district board has been ordered by the Local Government to take up anti-mosquito operation, the district board shall provide for waterways for the introduction of flood water into the interior of such area, if this has not already been arranged for by any other authority, and the owners of tanks, ponds or water collections shall admit the flood water into the said tanks, ponds and water collections.

3. (*1*) Whenever anti-mosquito operations have been ordered by the Local Government to be taken up by a district board in an area, it shall be lawful for the district board to treat all water collections periodically with larvicides.

When such anti-mosquito operation has been taken up by the district board, the owners of tanks, wells and other water collections shall neither offer any obstruction to their legitimate operations, nor claim any compensation.

(2) When any of the immature stages of the mosquito are found on any premises in any collection of water in any cess pit, well, pool, channel, barrel, tub, bucket, tank or any other vessel or in any bottle, tin, box, shell, earthenware vessel or any other article it shall be lawful for the District Health Officer or any assistant authorised by the District Health Officer to take immediate steps—

(*a*) to destroy any such immature stage of the mosquito by the application of oil or larvicide to prevent the recurrence of the insanitary condition and to render any pools or collections of water unfit to become breeding places for mosquitoes;

(*b*) to collect and remove empty tins, cans, bottles or other receptacles in which mosquitoes may breed;

(*c*) to cut down and remove any grass, bamboo stumps, fern or under-growth in which mosquitoes are likely to breed or be harboured;

(*d*) to fill with concrete or otherwise treat holes or hollows in trees which hold or are likely to hold water;

(*e*) to carry out any other anti-mosquito measure.

4. The district board may, by an order in writing, require regular use of larvicides in private drains and open cesspools by owners and occupiers of any land as an anti-mosquito measure at intervals of not more than ten days, provided that the necessary materials for the purpose shall be supplied by the district board. The district board may by its own staff also cause such drains and cesspools to be treated with larvicides.

5. The district board may, by an order in writing, require the owner or occupier of any building to provide mosquito-proof coverings for the cesspools within the building and to construct yard gullies for connection with drains within such time as may be specified in the order and shall require such coverings and gullies to be maintained in proper state of repair.

6. Whenever the district board is of opinion that sub-soil drainage may improve the sanitary condition of any land, the district board may, by an order in writing, require the owner of such land to provide sub-soil drains, provided that there is a suitable outfall for such drains.

7. (*1*) No person shall, within an area in which anti-mosquito operation has been ordered to be taken up by the district board, without special permission of the district board, make an excavation for the purpose of taking earth therefrom or for making of bricks or for the purpose of storing rubbish or offensive matter therein or dig any cesspool, tank, pond, well or pit.

(*2*) If any excavation, tank, pond, well or pit is made or dug in contravention of sub-rule (*1*) the district board may, by written notice, require the owner or occupier of the land on which the same is made or dug to fill up the same with earth or other material approved by the district board within such time as may be specified in the notice.

8. The owner or occupier of any land or building shall not keep therein any bottle, unbroken or broken, whether fixed on wall or not, tin, box, earthenware vessel, shell or any other article which may hold water, in such manner that it is likely to collect or retain water which may become the breeding place of mosquitoes.

9. When the district board or the Government has constructed any work with the object of preventing mosquito-breeding, the owner or occupier of the land or building on which such work is constructed shall not use such land or building in such manner as is likely to cause deterioration or to lessen the efficiency of such work.

10. The district board may, by an order in writing, require the owner or occupier of a land or building containing an unscreened container such as a tub, bucket, barrel, cistern or other vessel intended for storage of water or any other liquid to completely empty the same every seven days unless such container is fitted with a suitable cover and is properly protected to prevent access to the mosquitoes or is screened to the satisfaction of the District Health Officer or any other officer authorised by the District Health Officer in this behalf.

11. Whenever any land, being private property or within any private enclosure, appears to the district board, by reason of thick vegetation, under-growth or jungle or inequalities of surface or by

want of drainage to be in a state injurious to health or offensive to the neighbourhood, the district board may, by an order in writing, require the owners or occupiers or the owner and occupier, of such land, within fifteen days of the service of the order to clear and remove such vegetation, under-growth or jungle or dress such surface or drain or otherwise cleanse, treat or improve such land, and when the land belongs to the district board the work which the owners or occupiers may be required to do under this rule shall be carried out by the district board.

12. If for the purpose of any of these rules it shall be necessary to acquire any land not being the property of the person who is required to drain or irrigate his land or to pay compensation to any other person, the district board shall provide such land or pay such compensation.

13. The Chairman, Vice-Chairman, District Engineer, District Health Officer or Sanitary Inspector or any other person authorised by the district board in this behalf, may enter into or on any land, building or shed, hut, outhouse, stable, privy, urinal or any other such structure whether constructed of masonry, bricks, wood, mud, metal or any other material, with or without assistants or workmen, in order to make any inquiry, inspection, examination, survey, or for the purpose of executing any other work which may be necessary for the control and suppression of mosquito-breeding and of mosquito-borne diseases:

Provided that—

(*a*) no such entry shall be made between sunset and sunrise;

(*b*) no entry shall be made without the consent of the occupier thereof unless the said occupier has received at least twelve hours' notice of the intention to make such entry;

(*c*) reasonable notice shall be given in every case even when an entry may be made without notice, to enable the inmates of any apartment appropriated to women to remove to some part where the privacy may be preserved; and

(*d*) due regard shall be paid, so far as may be compatible with the exigencies of the purpose of entry, to the social and religious usages of the occupants.

Calcutta.—No. 3605P.H.—12th September 1936.—Major A. C. Chatterji, M.B., D.P.H., I.M.S., Director of Public Health, Bengal, is allowed leave on average pay for four months and fifteen days, under the proviso to Fundamental Rule 81(*b*)(*ii*), subject to the condition that the leave is spent elsewhere than in India, Ceylon or Nepal, with effect from the 17th September 1936, or from any subsequent date on which he may avail himself of the leave.

Calcutta.—No. 3606P.H.—12th September 1936.—Dr. S. N. Sur, M.D., D.P.H., D.T.M., Assistant Director of Public Health for Malaria Research, is appointed to act as Director of Public Health, Bengal, during the absence, on leave, of Major A. C. Chatterji, in addition to his own duties.

G. S. DUTT,

Secy. to the Govt. of Bengal.

EDUCATION DEPARTMENT.

NOTIFICATIONS.

No. 3578T. Edn.—9th September 1936.—In exercise of the power conferred by section 6, sub-section (*1*), clause (*c*), and section 10, of the Indian Universities Act, 1904 (VIII of 1904), as amended by the Calcutta University Act, 1921 (VII of 1921), His Excellency the Chancellor of the Calcutta University is pleased to re-nominate the following to be Ordinary Fellows of the University :—

(1) Professor Jnanendra Nath Mukherjee, D.Sc.

(2) Sir Praphullachandra Ray, Kt., C.I.E., D.Sc., Ph. D., F.C.S., F.A.S.B.

(3) Professor W. S. Urquart, M.A., D.Litt., D.D., D.L.

(4) Mr. Charu Chandra Biswas, C.I.E., M.A., B.L.

Minister-in-charge: The Hon'ble Khan Bahadur M. Azizul Haque.

Hooghly.—No. 3134Edn.—14th September 1936.—Babu Bidhu Bhusan Sen Gupta, Lecturer in Philosophy, Krishnagar College, in the Subordinate Educational Service, is appointed to act in the Bengal Educational Service as Professor of the subject at the Hooghly College, with effect from 31st August 1936, or any subsequent date on which he joins the appointment, during the absence, on leave, of Babu Sisir Kumar Bardhan.

Hooghly.—No. 3626T.Edn.— 11th September 1936.—Babu Keshab Chandra Chatarji, Subdivisional Inspector of Schools, Hooghly, acted in the Bengal Educational Service as District Inspector of Schools, Hooghly, for the period from the 1st June to the 14th July 1936 (both days inclusive), pending the arrival of Babu Pramatha Nath Banarji.

Registration.

NOTIFICATIONS.

Minister-in-charge: The Hon'ble Khan Bahadur M. Azizul Haque.

Mymensingh.—No. 600 Regn.—7th September 1936.—In exercise of the power conferred by section 3 of the Bengal Muhammadan Marriages and Divorces Registration Act, 1876 (Bengal Act I of 1876), the Government of Bengal (Ministry of Education) are pleased to appoint Maulvi Mohammad Abdul Khaliq temporarily to be a Muhammadan Registrar within the unions Nos. IX and XII of Kalihati police-station, unions Nos. VII, IX and X of Ghatail police-station, and unions Nos. VIII and IX of Phulbaria police-station, in the district of Mymensingh, during the absence, on leave, of Maulvi Shah Md. Abul Mansur, or until further orders.

Mymensingh.—No. 601 Regn.—7th September 1936.—In exercise of the power conferred by section 2 of the Kazis' Act, 1880 (Act XII of 1880), the Government of Bengal (Ministry of Education) are pleased to appoint Maulvi Mohammad Abdul Khaliq temporarily to be the Kazi for the celebration of marriages and the performance of other rites and ceremonies within the unions Nos. IX and XII of Kalihati police-station, unions Nos. VII, IX and X of Ghatail police-station and unions Nos. VIII and IX of Phulbaria police-station, in the district of Mymensingh, during the absence, on leave, of Maulvi Shah Md. Abul Mansur, or until further orders.

Pabna.—No. 606Regn.—7th September 1936.—In exercise of the power conferred by section 3 of the Bengal Muhammadan Marriages and Divorces Registration Act, 1876 (Bengal Act I of 1876), the Government of Bengal (Ministry of Education) are pleased to appoint Maulvi Muhammad Abu Jafar temporarily to be a Muhammadan Registrar within the police-station of Pabna, in the district of Pabna, during the absence, on leave, of Maulvi Saiyid Mainuddin, or until further orders.

Pabna.—No. 607Regn.—7th September 1936.—In exercise of the power conferred by section 2 of the Kazis' Act, 1880 (Act XII of 1880), the Government of Bengal (Ministry of Education) are pleased to appoint Maulvi Muhammad Abu Jafar temporarily to be the Kazi for the celebration of marriages and the performance of other rites and ceremonies within the police-station of Pabna, in the district of Pabna, during the absence, on leave, of Maulvi Saiyid Mainuddin, or until further orders.

Chittagong.—No. 612 Regn.—7th September 1936.—In exercise of the power conferred by section 3 of the Bengal Muhammadan Marriages and Divorces Registration Act, 1876 (Bengal Act I of 1876), the Government of Bengal (Ministry of Education) are pleased to appoint Maulvi Ataul Haque temporarily to be a Muhammadan Registrar within the police-station of Chakaria, in the district of Chittagong.

Chittagong.—No. 613 Regn.—7th September 1936.—In exercise of the power conferred by section 2 of the Kazis' Act, 1880 (Act XII of 1880), the Government of Bengal (Ministry of Education) are pleased to appoint Maulvi Ataul Haque temporarily to be the Kazi for the celebration of marriages and the performance of other rites and ceremonies within the police-station of Chakaria, in the district of Chittagong.

Bakarganj.—No. 618 Regn.—8th September 1936.—In exercise of the power conferred by section 3 of the Bengal Muhammadan Marriages and Divorces Registration Act, 1876 (Bengal Act I of 1876), the Government of Bengal (Ministry of Education) are pleased to appoint Maulvi Muhammad Keramat Ali temporarily to be a Muhammadan Registrar within the police-station of Tazumuddin, in the district of Bakarganj, during the absence, on leave, of Maulvi Muhammad Ramzan Ali, or until further orders.

Chittagong.—No. 619 Regn.—8th September 1936.—In exercise of the power conferred by section 2 of the Kazis' Act, 1880 (Act XII of 1880), the Government of Bengal (Ministry of Education) are pleased to appoint Maulvi Muhammad Keramat Ali temporarily to be the Kazi for the celebration of marriages and the performance of other rites and ceremonies within the police-station of Tazumuddin, in the district of Bakarganj, during the absence, on leave, of Maulvi Muhammad Ramzan Ali, or until further orders.

Chittagong.—No. 624 Regn.—9th September 1936.—In exercise of the power conferred by section 3 of the Bengal Muhammadan Marriages and Divorces Registration Act, 1876 (Bengal Act I of 1876), the Government of Bengal (Ministry of Education) are pleased to appoint Maulvi A. F. M. Enamul Kabir Siddiqui temporarily to be a Muhammadan Registrar within the police-station of Hathazari, in the district of Chittagong, during the absence, on leave, of Maulvi Hafizur Rahman, or until further orders.

Chittagong.—No. 625 Regn.—9th September 1936.—In exercise of the power conferred by section 2 of the Kazis' Act, 1880 (Act XII of 1880), the Government of Bengal (Ministry of Education) are pleased to appoint Maulvi A. F. M. Enamul Kabir Siddiqui temporarily to be the Kazi for the celebration of marriages and the performance of other rites and ceremonies within the police-station of Hathazari, in the district of Chittagong, during the absence, on leave, of Maulvi Hafizur Rahman, or until further orders.

Mymensingh.—No. 632Regn.—14th September 1936.—In exercise of the power conferred by section 3 of the Bengal Muhammadan Marriages and Divorces Registration Act, 1876 (Bengal Act I of 1876), the Government of Bengal (Ministry of Education) are pleased to appoint Maulvi Syed Abul Muzaffar Muhammad Husain temporarily to be a Muhammadan Registrar within unions Nos. I —XI in the police-station of Iswarganj, in the district of Mymensingh, during the absence, on leave, of Maulvi Saiyid Abdus Samad, or until further orders.

Mymensingh.—No. 633Regn.—14th September 1936.—In exercise of the power conferred by section 2 of the Kazis' Act, 1880 (Act XII of 1880), the Government of Bengal (Ministry of Education) are pleased to appoint Maulvi Syed Abul Muzaffar Muhammad Husain temporarily to be the Kazi for the celebration of marriages and the performance of other rites and ceremonies within unions Nos. I to XI in the police-station of Iswarganj, in the district of Mymensingh, during the absence, on leave, of Maulvi Saiyid Abdus Samad, or until further orders.

Mymensingh.—No. 638Regn.—14th September 1936.—In exercise of the power conferred by section 3 of the Bengal Muhammadan Marriages and Divorces Registration Act, 1876 (Bengal Act I of 1876), the Government of Bengal (Ministry of Education) are pleased to appoint Maulvi Abul Khair Ahmed temporarily to be a Muhammadan Registrar within the police-station of Sherpur, in the district of Mymensingh, during the absence, on leave, of Maulvi Wahibullah, or until further orders.

Mymensingh.—No. 639Regn.—14th September 1936.—In exercise of the power conferred by section 2 of the Kazis' Act, 1880 (Act XII of 1880), the Government of Bengal (Ministry of Education) are pleased to appoint Maulvi Abul Khair Ahmed temporarily to be the Kazi for the celebration of marriages and the performance of other rites and ceremonies within the police-station of Sherpur in the district of Mymensingh, during the absence, on leave, of Maulvi Wahibullah, or until further orders.

Mymensingh.—No. 644Regn.— 14th September 1936.—In exercise of the power conferred by section 3 of the Bengal Muhammadan Marriages and Divorces Registration Act, 1876 (Bengal Act I of 1876), the Government of Bengal (Ministry of Education) are pleased to appoint Maulvi Mirasuddin Ahmed temporarily to be a Muhammadan Registrar within the police-station of Haluaghat, in the district of Mymensingh, during the absence, on leave, of Maulvi Muhammad Zakiuddin, or until further orders.

Mymensingh.—No. 645Regn.—14th September 1936.—In exercise of the power conferred by section 2 of the Kazis' Act, 1880 (Act XII of 1880), the Government of Bengal (Ministry of Education) are pleased to appoint Maulvi Mirasuddin Ahmed temporarily to be the Kazi for the celebration of marriages and the performance of other rites and ceremonies within the police-station of Haluaghat in the district of Mymensingh, during the absence, on leave, of Maulvi Muhammed Zakiuddin, or until further orders.

H. GRAHAM,
Secy. to the Govt. of Bengal (offg.).

Orders by the Director of Public Instruction, Bengal.

Bengal Educational Service.

Hooghly.—No. 50B.—4th September 1936.—Maulvi Mehruddin Ahmed, officiating Professor of Persian, Hooghly College, in the Bengal Educational Service, is declared to have been on leave for the period from 6th July 1936 to 6th August 1936, viz., leave on average pay for fourteen days, under Fundamental Rules 81 (*b*) (*ii*) and 82 (*b*) and leave on half average pay for the remaining period, under Fundamental Rule 81 (*d*).

Dacca Divn.—No. 51B.—7th September 1936.—Miss Violet Roy, officiating Assistant Inspectress of Schools, Dacca Division (Dacca), in the Bengal Educational Service (Women's Branch), is granted earned leave for eight days, under rule 11(*a*) of the Bengal Services Revision of Leave Rules, 1934, with effect from 3rd September 1936, or any subsequent date on which she avails herself of it.

Calcutta.—No. 52B.—7th September 1936.—Miss Ushalata Biswas, Special Assistant Inspectress of Schools, Calcutta, in the Bengal Educational Service (Women's Branch), is granted leave on average pay for twenty-two days, under Fundamental Rule 81 (*b*) (*ii*), with effect from 31st October 1936.

Bakarganj.—No. 53B.—7th September 1936.—Maulvi Abdur Razzaq Chaudhury, officiating Head Master, Jhalakati Government High School, in the Bengal Educational Service, is declared, in terms of rules 81 (*b*) (*ii*) and 82 (*b*) of the Fundamental Rules, to have been on leave on average pay for six days from 27th July 1936.

Dacca Divn.—No. 54B.—8th September 1936.—Khan Bahadur Maulvi Abul Hashem Khan Chaudhury, Inspector of Schools, Dacca Division, in the Bengal Senior Educational Service, is granted leave on average pay for one month, with effect from 18th September 1936, under Fundamental Rule 81 (*b*) (*ii*).

J. M. BOTTOMLEY,
Director of Public Instrn., Bengal.

Orders by the Inspector-General of Registration, Bengal.

Murshidabad-24-Parganas. — No. 512. — 9th September 1936.—Babu Narmada Ranjan Das Gupta, Sub-Registrar attached to the Sadar Registration office at Berhampore, in the district of Murshidabad, on relinquishing charge as Sub-Registrar of Baduria, in the district of the 24-Parganas, is allowed leave on average pay for one month and twenty-five days, under rule 81 (*b*) (*ii*) of the Fundamental Rules, with effect from the 23rd August 1936.

Chittagong.—No. 513.—11th September 1936.—Maulvi Mahfuzal Huq, Sub-Registrar of Satkaniya, in the district of Chittagong, is allowed leave on average pay for one month, under rule 81 (*b*) (*ii*) of the Fundamental Rules, with effect from the 13th August 1936.

Dinajpur.—No. 514.—11th September 1936.—Babu John Ballav Chaudhuri, Sub-Registrar of Lahirihat, in the district of Dinajpur, is allowed leave on average pay for one month, under rule 81 (*b*) (*ii*) of the Fundamental Rules, with effect from the date on which he may be relieved.

Nadia-Dinajpur.—No. 515.—11th September 1936.—Babu Nirmal Kumar Mukharji, Sub-Registrar attached to the Sadar Registration office at Krishnagar, in the district of Nadia, is appointed to act as Sub-Registrar of Lahirihat in the district of Dinajpur, during the absence on leave of the permanent incumbent, or until further orders.

S. CHATTERJEA,
Inspector-General of Regn., Bengal.

FINANCE DEPARTMENT.

Audit.

CORRIGENDA.

The Bengal Financial Rules, 1st Edition (Reprint), 1930.

No. 7739F.—8th September 1936.—*Page 122—S.R. 9A.—Insert* the following as S.R. 9A :—

"S.R. 9A. In places where the Government Treasury business is conducted by the Bank, the memorandum must, except when otherwise provided, be presented to the Treasury Officer, who will enface it with an order to the Bank to receive the money and to grant a receipt."

Page 11—Rule 4.—(1) In lines 1 and 2 *for* the words "a branch of the Imperial Bank of India," *substitute* the words "the bank."

(2) In line 3 *for* the words "the Imperial Bank" which occur at two places *substitute* the words "the Reserve Bank or the Imperial Bank."

Page 15—Rule 13(a).—In lines 2 and 3 *for* the words "Imperial Bank of India, either at the local head office or a branch," *substitute* the word "Bank."

Miscellaneous.

NOTIFICATIONS.

No. 6105Mis.—14th September 1936.—Under section 25 of the Negotiable Instruments Act, XXVI of 1881, the Governor in Council is pleased to declare the following days to be public holidays during the year 1937 :—

Sri Panchami	..	15th February.
Id-uz-zuha	..	22nd and 23rd February.
Muharram	..	24th March.
Doljatra	..	26th March.
Easter Saturday	..	27th March.
Easter Monday	..	29th March.
Chaitra Sankranti	..	13th April.
Half-yearly closing of Banks' Accounts	..	1st July.
Mahalaya	..	4th October.
Durga and Lakshmi Pujas	..	12th, 13th, 14th, 15th, 19th and 20th October.
Kali Puja	..	2nd and 3rd November.
Jagadhatri Puja	..	12th November.
Id-ul-fitr	..	4th December.
Christmas Eve	..	24th December.
Last day of the year	..	31st December.

Note.—(*a*) Sundays, New Year's Day, Good Friday (26th March), and Christmas Day (25th December) are public holidays under the Act.

(*b*) As Fatiha Duazdaham (23rd May), Janmastami (29th August), the second day of Id-ul-fitr (5th December) and the day following Christmas Day (26th December) fall in the year 1937 on Sundays which are holidays under the Act, they are not included in the list of public holidays declared above for the year.

(*c*) The day which may be fixed for the celebration in India of the birthday of His Majesty the King-Emperor of India will also be a public holiday and will be notified separately in due course.

N.B.—If any of the Muhammadan holidays notified above does not fall on the day notified, the Muhammadan servants of Government may be granted a sectional holiday on the day on which the holiday is actually observed in *addition* to a holiday on the day notified.

No. 6106Mis.—14th September 1936.—The Governor in Council is pleased to notify that on the following days during 1937, which are not declared to be "public holidays," the offices under the Government of Bengal and all Revenue and Magisterial Courts in Bengal, with the exception of the office of the Registrar of Assurances, Calcutta, and the office of the Collector of Stamp Revenue, Calcutta, shall be closed :—

I.—Holidays on account of Hindu festivals.

Sri Panchami	..	16th February.
Dasahara	..	18th June.
Durga and Lakshmi Pujas	..	9th, 11th, 16th and 18th October.
Jagadhatri Puja	..	13th November.

II.—Other holidays.

The second, third, fourth and fifth days following Christmas Day, *i.e.*, 27th, 28th, 29th and 30th December.

Note.—Government offices in the various districts in Bengal may also be closed on the days declared as "local holidays" for the respective districts in Government resolution No. 702Misc., dated the 2nd February 1934.

Muhammadan officers with the exception of those employed in the office of the Registrar of Assurances, Calcutta, the office of the Collector of Stamp Revenue, Calcutta, and in the Bengal Government Press, are allowed to absent themselves from office on the days which are declared as "Special holidays" for Muhammadans in resolution No. 702Misc., dated the 2nd February 1934, in addition to the days allowed by the above notifications.

No. 6008Mis.—7th September 1936.—In exercise of the powers conferred by rule 44 (*d*) of the Civil Services (Classification, Control and Appeal) Rules, the Governor in Council and acting with his Ministers is pleased to sanction the following amendments to the Rules for the Management of the Printing Department, Bengal, viz:—

Amendments.

I. *Insert* the following as a new rule 70-A :—

"70-A. Rules 60 and 70 do not apply to piece-workers on the fluctuating temporary establishment. Such employees will be paid at grade rates for sixteen days (including the King Emperor's Birthday) each year to cover absence on account of holidays, sickness or leave, provided the worker has been in regular employment for the previous twelve months. 'Regular employment' should be interpreted as not less than 90 per cent. of the required working hours, excluding the hours of gazetted holidays; regard, however, will be had to absence in case of sickness.

2. This rule shall have effect from 1st January 1936."

II. *Renumber* the present rule 70-A as rule 70-B.

R. L. WALKER,

Secy. to the Govt. of Bengal (offg.).

COMMERCE DEPARTMENT.

NOTIFICATIONS.

No. 52T. Com.—10th September 1936.—Whereas the Governor in Council is satisfied that the conditions of work in jute pressing factories are such that there is no appreciable risk of contravention of the provisions of Chapter IV of the Factories Act, 1934 (XXV of 1934), in the case of such factories :

Now, therefore, in exercise of the power conferred by the second proviso to sub-section (*1*) of section 41 of the said Act and in supersession of notification No. 8074 Com. of 5th August 1935, the Governor in Council is pleased to exempt all jute pressing factories from the provisions of the said section in respect of all adult workers other than the mechanical and press house staff; provided that—

(*a*) (*i*) in seasonal factories no such worker other than a worker engaged solely in the importing of raw jute shall be employed on a Sunday;

(*ii*) in factories which have been declared not to be seasonal, no such worker shall be employed on a Sunday;

(*b*) the periods for work shall be, in the case of factories in the district of Howrah, within the limits of 7 a.m. and 7 p.m. and in the case of other factories between the limits of 6 a.m. and 6 p.m., and

(*c*) the manager or occupier of any such factory shall, before he avails himself of the exemption granted under this order, serve on the Inspector and shall display in the factory in accordance with the provisions of sub-section (*2*) of section 76 of the said Act, a notice of his intention so to avail himself, and shall keep the notice so displayed for such time as he avails himself of the exemption.

No. 94T. Com.—10th September 1936.—Whereas the Governor in Council is satisfied that owing to the nature of work carried on in jute pressing factories it is unreasonable to require that the periods of work of adult workers employed in such factories other than the mechanical and press house staff should be fixed beforehand :

Now, therefore, in exercise of the power conferred by sub-section (*1*) of section 44 of the Factories Act, 1934 (XXV of 1934), and in supersession of notification No. 8111 Com., dated 5th August 1935, the Governor in Council is pleased to order that the provisions of sections 39 and 40 of the said Act shall be so relaxed that the said provisions will not apply to such workers provided the following conditions are observed, namely :—

(*a*) (*i*) in seasonal factories no such worker other than a worker engaged solely in the importing of raw jute shall be employed on a Sunday;

(*ii*) in factories which have been declared not to be seasonal, no such worker shall be employed on a Sunday;

(*b*) the periods for work shall be, in the case of factories in the district of Howrah, within the limits of 7 a.m. and 7 p.m. and in the case of other factories between the limits of 6 a.m. and 6 p.m., and

(*c*) the manager or occupier of any such factory shall, before he avails himself of the relaxation granted under this order, serve on the Inspector and shall display in the factory in accordance with the provisions of sub-section (*2*) of section 76 of the said Act, a notice of his intention so to avail himself, and shall keep the notice so displayed for such time as he avails himself of the relaxation.

R. L. WALKER,

Secy. to the Govt. of Bengal (offg.).

Orders by the Registrar of Joint Stock Companies, Bengal.

Calcutta, the 7th September 1936.

In the matter of the Indian Companies Act, 1913 (VII of 1913), and in the matter of Kaliah and Co., Ltd.

Notice is hereby given that, on the expiration of three months from date, the name of Kaliah and Co., Ltd., will, unless cause is shown to the contrary, be struck off the register, and the company will be dissolved.

In the matter of the Indian Companies Act, 1913 (VII of 1913), and in the matter of Bengal Steel Corporation, Ltd.

Notice is hereby given that, on the expiration of three months from date, the name of Bengal Steel Corporation, Ltd., will, unless cause is shown to the contrary, be struck off the register, and the company will be dissolved.

N. K. MAJUMDER,

Registrar of Companies Under Act VII of 1913.

Calcutta, the 9th September 1936.

In the matter of the Indian Companies Act, 1913 (VII of 1913), and in the matter of Calcutta Drivers Motors Stores, Ltd.

Notice is hereby given that the name of Calcutta Drivers Motor Stores, Ltd., has this day, in pursuance of section 247 of the Act, been struck off the register and that the company is dissolved.

In the matter of the Indian Companies Act, 1913 (VII of 1913), and in the matter of Prudential Soap Co., Ltd.

Notice is hereby given that the name of Prudential Soap Co., Ltd., has this day, in pursuance of section 247 of the Act, been struck off the register and that the company is dissolved.

In the matter of the Indian Companies Act, 1913 (VII of 1913), and in the matter of Paragaon Banking and Trading Co., Ltd.

Notice is hereby given that the name of Paragaon Banking and Trading Co., Ltd., has this day, in pursuance of section 247 of the Act, been struck off the register and that the company is dissolved.

In the matter of the Indian Companies Act, 1913 (VII of 1913), and in the matter of Rajshahi Electric Supply Co., Ltd.

Notice is hereby given that the name of Rajshahi Electric Supply Co., Ltd., has this day, in pursuance of section 247 of the Act, been struck off the register and that the company is dissolved.

N. K. MAJUMDER,

Registrar, Joint Stock Companies.

DEPARTMENT OF AGRICULTURE AND INDUSTRIES.

Botanical Garden.

NOTIFICATIONS.

Minister-in-charge: The Hon'ble Nawab Sir Mohiuddin Faroqui, Kt., of Ratanpur.

Howrah.—No. 409 T.A.I.—7th September 1936.—Mr. K. P. Biswas, Curator of the Herbarium, Royal Botanic Garden, Sibpur, is allowed leave for thirteen months from the 9th September 1936, or any subsequent date on which he may avail himself of it, viz., leave on average pay for one month, under rule 81 (*b*) (*ii*) of the Fundamental Rules, and Study Leave for one year under the Study Leave Rules.

Howrah.—No. 410T.A.I.—7th September 1936.—Mr. T. D. Srinivasan, officiating Systematic Assistant in the Botanical Survey of India, is appointed to act as Curator of the Herbarium, Royal Botanic Garden, during the absence, on leave, of Mr. K. P. Biswas, until further orders.

Forests.

NOTIFICATION.

Darjeeling.—No. 1141For.—22nd August 1936.—Under section 23 of the Indian Forest Act, 1927 (XVI of 1927), and in supersession of notification No. 1000For., dated the 24th August 1935, the Governor in Council is pleased to grant a right of way to the general public over the portion of the roads mentioned below which pass through the Ghoom-Simana Reserved Forests :—

No.	Name of road.	Limits within reserved forest.	Distance in miles.	Average width of road surface in feet.	Agency by whom maintained.
1	Ghum-Simana ..	Enters reserved forest near boundary pillar No. 1 and goes out at Simana.	8·72	Up to Sukiapokhri 16 to 20, thence to Simana busti 12 to 16.	Public Works Department.
2	Simana-Mirik ..	Enters reserved forest at Simana and goes out near boundary pillar No. 178.	3·6	9	Do.
3	Simana-Manebhanjang.	Wholly within reserved forest.	1·3	8	Do.
4	District board road No. 18B.	From a point on the Ghum-Simana Road, about 2 miles 3 furlongs from Ghum, goes out of reserved forest at boundary pillar No. 30.	1·14	10	District board.
5	District board road No. 14 to Pulbazar.	From Lepchajagat goes out of reserved forest at boundary pillar No. 228.	2·05	10	Do.
6	District board road No. 13 to Nagri.	From Sukiapokhri goes out of reserved forest at boundary pillar No. 104.	5·12	16	Do.
7	Sukiapokhri to Gyribas through Jorepokhri.	Wholly within reserved forest except through Jorepokhri D. 1. F. location.	1·66	10	Darjeeling Improvement Fund.
8	Pokhriabong	From district board road No. 13 near boundary pillar No. 104, goes out of reserved forest at boundary pillar No. 101.	0·5	10	Khasmahal Department.
9	Ghoom Rock Road.	From a point on the Ghum-Simana Road, 4 miles from Ghum, to Ghoom Rock View Point and pavilion.	0·75	10	Forest Department.

The Governor in Council is also pleased to declare the portions of the Ghum-Simana Reserved Forest described below, to be temporarily under the control of the Darjeeling Improvement Fund, subject to the condition that the sale or removal of forest produce thereon will continue to be under the control of the Forest Department :—

(1) Sukiapokhri location—Area 22·0 acres.

The boundaries of this location are as follows :—

(The magnetic bearings have been corrected to the true meridian.)

(The distances are in Gunter's chains and links.)

From boundary pillar No.	At a bearing of	For a distance of	To boundary pillar No.
1	94°30′	0 chain 67 links	2
2	174°45′	2 chains 50 links	3
3	181°30′	2 chains 8 links	4
4	181°0′	2 chains 86 links	5
5	163°30′	3 chains 32 links	6
6	164°15′	2 chains 92 links	7
7	159°30′	1 chain 94 links	8
8	166°0′	0 chain 88 links	9
9	163°0′	0 chain 36 links	10
10	159°30′	1 chain 30 links	11
11	186°30′	0 chain 91 links	12
12	216°30′	2 chains 87 links	13
13	199°15′	0 chain 81 links	14
14	216°30′	2 chains 10 links	15
15	211°30′	2 chains 83 links	16
16	179°15′	2 chains 23 links	17
17	188°45′	1 chain 46 links	18
18	225°30′	1 chain 91 links	19
19	146°15′	1 chain 36 links	20
20	203°45′	0 chain 53 links	21
21	296°45′	1 chain 79 links	22
22	266°15′	0 chain 91 links	23
23	168°30′	0 chain 85 links	24
24	185°0′	1 chain 20 links	25
25	188°45′	0 chain 63 links	26
26	202°30′	2 chains 65 links	27
27	179°0′	1 chain 87 links	28
28	195°0′	1 chain 29 links	29
29	204°0′	1 chain 41 links	30
30	339°15′	0 chain 64 links	31
31	337°15′	0 chain 48 links	32
32	338°45′	1 chain 24 links	33
33	3°45′	1 chain 99 links	34
34	0°15′	0 chain 72 links	35
35	15°15′	1 chain 12 links	36
36	269°30′	1 chain 11 links	37
37	339°45′	2 chains 98 links	38
38	2°0′	2 chains 82 links	39
39	359°30′	1 chain 82 links	40
40	19°45′	1 chain 36 links	41
41	323°0′	1 chain 17 links	42
42	20°45′	1 chain 61 links	43
43	6°30′	3 chains 40 links	44
44	17°0′	2 chains 18 links	45
45	352°15′	1 chain 52 links	46
46	357°45′	2 chains 12 links	47
47	3°0′	1 chain 58 links	48
48	8°0′	2 chains 14 links	49
49	11°0′	2 chains 59 links	50
50	9°30′	1 chain 37 links	51
51	16°45′	1 chain 8 links	52
52	2°30′	1 chain 90 links	53
53	4°30′	2 chains 25 links	54
54	13°30′	2 chains 0 link	55
55	20°15′	1 chain 88 links	56
56	83°15′	1 chain 59 links	57
57	149°15′	1 chain 28 links	58
58	100°0′	1 chain 11 links	59
59	101°30′	0 chain 94 links	60
60	103°45′	0 chain 39 links	1

(2) Ghoom Rock View Point—Area 0·15 acre and Ghoom Rock Pavilion—Area 0·74 acre leased to the Darjeeling Improvement Fund for an annual rent of Re. 1 only for a period of 15 years (*vide* Bengal Government No. 142For., dated the 9th March 1934).

ERRATUM.

Dacca-Mymensingh.—No. 1365 For.—11th September 1936.—In line 75 of the notification No. 407 For., dated the 3rd April 1934, published at pages 529-534, Part I of the *Calcutta Gazette* of the 12th idem, excluding certain areas from the reserved forests of the Attiah pargana in the Dacca-Mymensingh Division, *for* the expression "Total area in acres 432·74" *substitute* "Total area in acres 423·74."

H. S. E. STEVENS,
Secy to the Govt. of Bengal.

Orders by the Director of Agriculture, Bengal.

No. 16675.—11th September 1936.—Rai Sahib Tara Nath Roy, Inspector of Agricultural Schools, Bengal, is granted leave on average pay for the period from 15th October 1936 to 15th December 1936, under rule 81(*b*)(*ii*) of the Fundamental Rules.

He will retire with effect from the 16th December 1936.

KENNETH MCLEAN,
Director of Agriculture, Bengal.

Board of Industries, Bengal.

CALCUTTA, THE 26TH AUGUST 1936.

RESOLUTION—No. 8.

The Board considered an application, dated the 18th May 1936, from one Maulvi S. Mahmudar Rahman of Noakhali for an aid of Rs. 500 under section 19 (*1*) (*a*) of the Bengal State Aid to Industries Act, 1931 (Bengal Act III of 1931), for the purpose of starting a bakery concern at Chittagong on scientific and hygienic principles.

Ordered unanimously that the application be rejected and the resolution published in the *Calcutta Gazette*.

By order of the Board of Industries, Bengal,

A. T. WESTON,
Secy., Board of Industries, Bengal.

CALCUTTA, THE 26TH AUGUST 1936.

RESOLUTION—No. 9.

The Board considered an application, dated the 29th July 1936, from Maulvi M. A. Huson of Calcutta for a loan of Rs. 1,000 under section 19 (*1*) (*a*) of the Bengal State Aid to Industries Act, 1931 (Bengal Act III of 1931), for the purposes of (*1*) purchasing special raw material for cardboard box manufacture, (*2*) paying off the balance of the outstanding principal against the current loan under the Act and (*3*) utilising the balance as working capital for the development of his Rajabazar Cardboard Box Works.

A report of inspection on the progress of the business and the nature of the security offered was read. It was unanimously decided as follows:—

Order—Ordered that in view of Government notification No. 4313 Ind., dated the 7th July 1936, the application need not be advertised as required under rule 3 of rules under section 16 of the Act. Ordered also that in exercise of the powers conferred in Government notification No. 4312 Ind., dated the 7th July 1936, the loan of Rs. 1,000 asked for be paid subject to the following conditions:—

(*1*) that the outstanding principal with interest on the existing loan to the credit of the applicant be paid off before making the above loan of Rs. 1,000;

(*2*) that a mortgage bond be executed by the applicant in the form drawn up by the Solicitor to the Government of Bengal;

(*3*) that interest be charged at the rate of 6¼ per cent. per annum payable with each instalment on the balance of the unpaid principal;

(*4*) that the entire loan be repaid in five annual instalments of Rs. 200 each *plus* interest, each instalment being payable in September of each year beginning with September 1937; and

(*5*) that penal interest be charged at the rate of 8 per cent. per annum on any overdue instalment of the payment of the loan.

Ordered also that the resolution be published in the *Calcutta Gazette*.

By order of the Board of Industries, Bengal,

A. T. WESTON,
Secy., Board of Industries, Bengal.

CALCUTTA, THE 26TH AUGUST 1936.

RESOLUTION—No. 13.

The Board considered their resolution No. 16 of the meeting held on the 24th June 1936, unanimously recommending the grant of a loan of Rs. 400 to Md. Hazrat Ali of Shulahashia, Mymensingh, for the purpose of purchasing a sewing machine for his existing boot and shoe factory, prayed for in his application, dated the 6th April 1936, under section 19 (*1*) (*a*) of the Bengal State Aid to Industries Act, 1931 (Bengal Act III of 1931), which had since been advertised in accordance with rule (*3*) under section 16 of the Act and in response to which no objection has been received.

In exercise of the powers since conferred on the Board in Government notification No. 4312 Ind., dated the 7th July 1936, and the Board having been satisfied that the security offered against the loan is adequate as required under the Act, it was ordered as follows :—

That the loan of Rs. 400 asked for be paid subject to the following conditions :—

(*1*) that a mortgage bond be executed by the applicant in the form drawn up by the Solicitor to the Government of Bengal;

(*2*) that interest be charged at the rate of 6¼ per cent. per annum payable with each instalment on the balance of the unpaid principal;

(*3*) that the entire loan be repaid in five annual instalments of Rs. 80 each *plus* interest, each instalment being payable in September of each year beginning with September 1937; and

(*4*) that penal interest be charged at the rate of 8 per cent. per annum on any overdue instalment of repayment of the loan.

Ordered also that the resolution be published in the *Calcutta Gazette*.

By order of the Board of Industries, Bengal,

A. T. WESTON,
Secy., Board of Industries, Bengal.

Orders by the Registrar of Co-operative Societies, Bengal.

No. 1-L.—10th September 1936.—Whereas I am of opinion, as the result of an enquiry held into the constitution, working and financial condition of the Shamukjani Paschimpara Co-operative Samiti (registered No. 69 of 1925), in the subdivision Kishoreganj in the district of Mymensingh, under sub-section (*1*) of section 35 of the Co-operative Societies Act, II of 1912, that the society ought to be dissolved.

Now, therefore, in exercise of the power conferred by sub-section (*1*) of section 39 of the same Act, I hereby cancel the registration of the said society.

And further, in exercise of the power conferred by sub-section (*1*) of section 42 of the same Act, I hereby appoint the Inspector of Co-operative Societies, Kishoreganj, to be liquidator of the said society.

No. 2-L.—10th September 1936.—Whereas I am of opinion, as the result of an enquiry held into the constitution, working and financial condition of the Bejugalia Uttarpara Joutha Bank (registered No. 180 of 1924), in the subdivision Sadar in the district of Noakhali, under sub-section (*1*) of section 35 of the Co-operative Societies Act, II of 1912, that the society ought to be dissolved.

Now, therefore, in exercise of the power conferred by sub-section (*1*) of section 39 of the same Act, I hereby cancel the registration of the said society.

And further, in exercise of the power conferred by sub-section (*1*) of section 42 of the same Act, I hereby appoint the Departmental Officer in charge of Co-operative Societies, Hatiya Circle, to be liquidator of the said society.

A. M. ARSHADALI,
Regr. of Co-operative Societies, Bengal.

REVENUE DEPARTMENT.

Land Revenue.

NOTIFICATIONS.

Bakarganj.—No. 13107L.R.—11th September 1936.—Under the provisions of section 3(*14*) of the Bengal Tenancy Act, 1885 (Act VIII of 1885), Babu Naresh Chandra Pal, Settlement Kanungo, is authorised to discharge, in the district of Bakarganj, the functions of Revenue Officer, under Chapter X of that Act, so far as they relate to surveys and the preparation of record-of-rights.

Bakarganj.—No. 13108L.R.—11th September 1936.—In exercise of the powers conferred by section 3 of the Bengal Land Revenue Settlement Regulation, 1825 (IX of 1825), read with section 20 of the Bengal Land Revenue Settlement Regulation, 1822 (VII of 1822), the Governor in Council is pleased to vest Babu Naresh Chandra Pal, Settlement Kanungo, who has, by notification No. 11819-C.P., dated the 20th August 1936, been vested by the Board of Revenue with the powers of a Collector in the estate of Maulvi Majub Ali Choudhuri and in the estate of Babu Narendra Nath Mitra, in the district of Bakarganj, for the purpose of the work of maintenance of the record-of-rights of that estate, with powers under section 19 of the said Bengal Land Revenue Settlement Regulation, 1822, within the local limits of that estate, to require and compel persons mentioned in the section to attend and produce accounts and other papers and to examine such persons under that section for the purpose of the said work of the maintenance of the record-of-rights.

Nadia.—No. 13110L.R.—11th September 1936.—In exercise of the powers conferred by sub-section (*3*) of section 158A of the Bengal Tenancy Act, 1885 (VIII of 1885), as amended up to date, the Governor in Council is pleased to appoint for the purpose of that section Babu Purna Chandra Sen Deputy Magistrate and Deputy Collector, on probation, Nadia, to perform the functions of a Certificate Officer under the Public Demands Recovery Act, 1913, for the recovery of any arrears of rent (including cesses) due to the estate of Sreemati Susila Bala Basu, executrix to the estate of late Charu Chandra Bose of Krishnagar, in the district of Nadia.

Jalpaiguri.—No. 13113L.R.—11th September 1936.—In exercise of the powers conferred by sub-section (*3*) of section 158A of the Bengal Tenancy Act, 1885 (VIII of 1885), the Governor in Council is pleased to appoint for the purpoe of that section, Babu Lalit Kumar Dutta, Sub-Deputy Collector, to perform the function of a Certificate Officer under the Bengal Public Demands Recovery Act, 1913 (Bengal Act III of 1913), for the recovery of arrears of rents (including cesses) due to the estates (1) of Nawabzadi Kamaran Nessa Fatema Khatoon and another and (2) of Babu Jagat Kanto Neogy and others, situated in the district of Jalpaiguri.

Murshidabad.—No. 13116L.R.—11th September 1936.—In exercise of the powers conferred by section 3 of the Bengal Land Revenue Settlement Regulation, 1825 (IX of 1825), read with section 20 of the Bengal Land Revenue Settlement Regulation, 1822 (VII of 1822), the Governor in Council is pleased to vest Babu Mohini Mohan Choudhury, Settlement Kanungo, who has, by notification No. 12070C.P., dated the 26th August 1936, been vested by the Board of Revenue with the powers of a Collector in the estate of Babu Amarendra Narayan Roy of Jemo, in the district of Murshidabad, for the purpose of the work of maintenance of the record-of-rights of that estate, with powers under section 19 of the said Bengal Land Revenue Settlement Regulation, 1822 within the local limits of that estate, to require and compel persons mentioned in the section to attend and produce accounts and other papers and to examine such persons under that section for the purpose of the said work of the maintenance of the record-of-rights.

Mymensingh.—No 13070L R.—11th September 1936.—In exercise of the power conferred by sub-section (*1*) of section 3 of the Bengal Agricultural Debtors Act, 1935 (Bengal Act VII of 1936), the Governor in Council is pleased to establish the undermentioned Debt Settlement Boards in the Sadar subdivision of the Mymensingh district for the local areas respectively shown against each.

In exercise of the power conferred by sub-section (*1*) of section 40 of the said Act read with rules 31 and 82 of the Bengal Agricultural Debtors Rules, 1936, the Governor in Council is pleased to appoint the Subdivisional Magistrate of Sadar, *ex officio*, as Ordinary Appellate Officer and the senior munsif of Mymensingh, *ex officio*, as Special Appellate Officer for each of the said local areas :—

Name of Debt Settlement Board.		Name of union comprising the local area.
Paranganj	..	Paranganj.
Kusthia	..	Kusthia.
Ghagra	..	Ghagra.
Bhabakhali	..	Bhabakhali.
Akua	..	Akua.
Dapunia	..	Dapunia.
Amirabari	..	Amirabari.
Longair	..	Longair.
Gaffargaon	..	Gaffargaon.
Neguair	..	Neguair.
Rasulpur	..	Rasulpur.
Mashakhali	..	Mashakhali.
Dhanikhola	..	Dhanikhola.
Kanihari	..	Kanihari.
Shakhua	..	Shakhua.
Balipara	..	Balipara.
Birunia	..	Birunia.
Bhaluka	..	Bhaluka.
Dhitpur	..	Dhitpur.
Tarati	..	Tarati.

Mymensingh.—No. 13071L.R.—11th September 1936.—In exercise of the power conferred by sub-section (2) of section 3 of the Bengal Agricultural Debtors Act, 1935 (Bengal Act VII of 1936), the Governor in Council is pleased to appoint the following persons to be Chairmen and members respectively of the undermentioned Debt Settlement Boards in the Mymensingh district for a term of three years, with effect from 8th October 1936:—

Sadar (South) subdivision.

Paranganj Debt Settlement Board.

1. Munshi Taib Ali Sarkar, Member and Chairman.

Members.

2. Babu Gagan Chandra Saha.
3. Munshi Mofizuddin Sarkar.
4. Munshi Injil Ali Sarkar.
5. Munshi Sadak Ali Sarkar.

Kusthia Debt Settlement Board.

1. Munshi Muhammad Azumuddin Sarkar, Member and Chairman.

Members.

2. Babu Nagendra Charan De.
3. Munshi Kalimuddin Sarkar.
4. Munshi Abdul Mamin.
5. Babu Mukunda Chandra Ghosh.

Dhagra Debt Settlement Board.

1. Munshi Hossain Ali Sarkar, Member and Chairman.

Members.

2. Munshi Abdul Bari.
3. Babu Devendra Chandra De.
4. Munshi Amir Ali.
5. Munshi Muhammad Abdul Gani.

Bhabakhali Debt Settlement Board.

1. Maulvi Muhammad Umedali, B.L., Member and Chairman.

Members.

2. Dr. Jaliluddin Ahmed.
3. Babu Sonatan Saha.
4. Babu Jogesh Chandra Chakravorty.
5. Munshi Osman Ali Sarkar.

Akua Debt Settlement Board.

1. Babu Satish Chandra Bhuyan, B.L., Member and Chairman.

Members.

2. Munshi Abdul Ali Sarkar.
3. Maulvi Abdul Mojid, B.A.
4. Maulvi M. Abdulla, B.A.
5. Maulvi Ali Newaj, M.A.

Dapunia Debt Settlement Board.

1. Maulvi Abdul Karim Khan, Member and Chairman.

Members.

2. Babu Girish Chandra Dutta.
3. Munshi Abbas Ali Sarkar.
4. Munshi Amanulla Beg.
5. Munshi Osman Gani Bepari.

Amirabari Debt Settlement Board.

1. Babu Sachindra Nath Chakravorty, Member and Chairman.

Members.

2. Maulvi Nawab Ali.
3. Babu Hari Das Ghoshal.
4. Munshi Abdul Jabbar Pathan.
5. Munshi Abdul Mojid Khan.

Longair Debt Settlement Board.

1. Maulvi Elahi Baksha Sarkar, Member and Chairman.

Members.

2. Babu Basanta Kumar Bal.
3. Maulvi Abdur Rahman Khan.
4. Munshi Habibor Rahman.
5. Maulvi Abdur Rashid Ahmed.

Gaffargaon Debt Settlement Board.

1. Maulvi Abdul Karim, Member and Chairman.

Members.

2. Munshi Hobibullah Molla.
3. Munshi Abdul Mojid Sarkar.
4. Babu Krishna Kumar Das.
5. Munshi Amanatullah.

Negnair Debt Settlement Board.

1. Maulvi Abdul Helim Khan, Member and Chairman.

Members.

2. Hafez Fazlur Rahman.
3. Maulvi Syed Abdul Bari.
4. Babu Nagendra Chandra Roy, B.A.
5. Maulvi Abdul Gafur Khan.

Razulpur Debt Settlement Board.

1. Maulvi Muhammad Hobibullah, Member and Chairman.

Members.

2. Maulvi Muhammad Abdul Hakim.
3. Maulvi Muhammad Abdus Samad.
4. Babu Surendra Sundar De Munshi.
5. Babu Jagabandhu Dhar.

Mashakhali Debt Settlement Board.

1. Maulvi Ghyasuddin Pathan, B.L., Member and Chairman.

Members.

2. Maulvi Abdur Rouf, B.A.
3. Munshi Tamijuddin Khan.
4. Munshi Abdus Sobhan.
5. Babu Nripendra Nath Chatterjee.

Dhanikhola Debt Settlement Board.

1. Maulvi Muhammad Osman Ali, Member and Chairman.

Members.

2. Babu Mahendra Nath Sanyal.
3. Munshi Muhammad Abul Mohsen Tarafdar.
4. Munshi Muhammad Abdul Hoque Mandal.
5. Munshi Muhammad Jobedali Sarkar.

Kanihari Debt Settlement Board.

1. Babu Profulla Kumar Chakravorty, Member and Chairman.

Members.

2. Babu Surendra Nath Sen.
3. Munshi Abdur Rahman Fakir.
4. Munshi Faizur Rahman.
5. Munshi Abdul Mojid.

Shakhua Debt Settlement Board.

1. Munshi Abdul Hamid Fakir, Member and Chairman.

Members.

2. Munshi Abdur Rahman Fakir.
3. Maulvi Wayezuddin.
4. Babu Mahim Chandra Mitra.
5. Babu Pancha Nanda Sarkar.

Balipara Debt Settlement Board.

1. Babu Jnaneswar Chakravorty, Member and Chairman.

Members.

2. Babu Ram Krishna Sen.
3. Maulvi Abdul Hekim.
4. Hazi Muhammad Imamuddin Munshi.
5. Munshi Rahmatullah Sarkar.

Birunia Debt Settlement Board.

1. Maulvi Jahiruddin Sarkar, Member and Chairman.

Members.

2. Babu Mohim Chandra Bhowmick.
3. Munshi Abdur Rahman Khalifa.
4. Babu Jatindra Nath Nandi.
5. Munshi Muhammad Joynal.

Bhaluka Debt Settlement Board.

1. Maulvi Abedulla Sarkar, Member and Chairman.

Members.

2. Muhammad Sanat Ali Sarkar.
3. Babu Mahim Chandra Sarkar.
4. Munshi Jobedali Sarkar.
5. Babu Bharat Chandra Singha.

Dhitpur Debt Settlement Board.

1. Babu Rajendra Kumar Ganguly, Member and Chairman.

Members.

2. Babu Uday Chandra Deb Nath.
3. Babu Raj Chandra Das.
4. Munshi Abdul Mojid Khan.
5. Munshi Ebadullah Sarkar.

Tarati Debt Settlement Board.

1. Munshi Abdul Ahad Sarkar, Member and Chairman.

Members.

2. Babu Upendra Chandra Das.
3. Babu Durga Charan Ghosh.
4. Hazi Shahed Ali.
5. Munshi Abdul Latif.

Rangpur.—No. 13193L.R. — 14th September 1936.—In exercise of the power conferred by section 103B, sub-section (*3*) of the Bengal Tenancy Act, 1885 (Act VIII of 1885), the Governor in Council is pleased to declare that a record-of-rights has been finally published under section 103A, sub-section (*2*) of the said Act, in respect of every village included in the police-station of Phulbari, in the district of Rangpur.

ERRATA.

Dacca.—No. 13067 L.R.—10th September 1936.—In notification No. 10091 L.R., dated the 14th July 1936, published at pages 1815-16 of Part I of the *Calcutta Gazette* of the 30th idem, the following amendments are made:—

Sadar (North) subdivision.

Kaliganj Debt Settlement Board.

Read "3. Babu Jogesh Chandra Dutta" *for* "3. Rai Sahib Jogesh Ch. Dutta Gupta."

Kusura Debt Settlement Board.

Read "4. Babu Balaram Roy Kapali" *for* "4. Babu Balaram Ray."

Narayanganj subdivision.

Bandar Debt Settlement Board.

Read "1. Babu Sachindra Narayan Sen Choudhury, Member and Chairman" *for* "1. Babu Sachindra Narayan Sen, Member and Chairman."

Noakhali.—No. 13068 L.R.—10th September 1936.—In notification No. 10103 L.R., dated the 14th July 1936, published at pages 1834-36 of Part I of the *Calcutta Gazette* of the 30th idem, under the Chhagalnaiya Debt Settlement Board, *read* "1. Babu Kunja Behari Podder, B.L., Member and Chairman" *for* "1. Babu Kunja Mohan Poddar, B.L., Member and Chairman."

Land Acquisition.

NOTIFICATIONS.

24-Parganas.—No. 13092L.A.—11th September 1936.—The Governor in Council is pleased to cancel the notification No. 10804L. A., dated the 12th August 1935, under section 4 of the Land Acquisition Act, I of 1894. published at page 1580, Part I of the *Calcutta Gazette* of the 15th idem, in respect of the proposed acquisition of 0·1167 of an acre of land comprising portion of cadastral plot No. 3687 required by the Kamarhatti Municipality for improving the Graham road in the village of Ariadaha-Kamarhatty, jurisdiction list No. 1, thana Baranagore, pargana Calcutta, district 24-Parganas.

Tippera.—No. 13104L.A.—11th September 1936.—In exercise of the powers conferred by section 48 (*1*) of the Land Acquisition Act, I of 1894, the Governor in Council is pleased to withdraw from the acquisition of 0·0641 of an acre of land declared for acquisition under declaration No. 19941L.A., dated the 7th December 1928, published at page 2527, Part I of the *Calcutta Gazette* of the 13th idem, and required for construction of the Balia Girls' School, in the village of Uttar Balia, pargana Gunanandi, district Tippera.

Howrah.—No. 13171L.A.—12th September 1936.—Whereas it appears to the Governor in Council that land is likely to be required to be taken by Government partly at the public expense and partly at the expense of the Mohiary union board for a public purpose, viz., for Purbanowpara-Ankurhati playground, in the village of Ankurhati, jurisdiction list No. 25, thana Domjur, pargana Paikana district Howrah, it is hereby notified that for the above purpose a piece of land measuring, more or less, 2·28 acres bounded on the—

North—By river Saraswati,
South—By union board road,
East—By lands of Imani Sheik and Rahim Sheik,
West—By lands of Anwar Sheik and Rajek Sheik.

is likely to be required within the aforesaid village of Ankurhati.

This notification is made, under the provisions of section 4 of Act I of 1894, to all whom it may concern.

A plan of the land may be inspected in the office of the Collector of Howrah.

In exercise of the powers conferred by the aforesaid section, the Governor in Council is pleased to authorise the officers for the time being engaged in the undertaking, with their servants and workmen, to enter upon and survey the land and do all other acts required or permitted by that section.

Any person interested in the above land, who has any objection to the acquisition thereof, may, within thirty days after the date on which public notice of the substance of this notification is given in the locality, file an objection in writing before the Collector of Howrah.

Burdwan.—No. 13184L.A.—14th September 1936.—Whereas it appears to the Governor in Council that land is likely to be required to be taken by Government at the public expense for a public purpose, viz., for the approach and outfall channel of pipe culvert under district board road, Damodar Canal Project, in the village of Chandipur, jurisdiction list No. 41, thana Bhatar, pargana Mazafarsahi, district Burdwan, it is hereby notified that for the above purpose a piece of land comprising part of cadastral survey plot No. 2273, and measuring, more or less, 0·02 of an acre, is likely to be required within the aforesaid village of Chandipur.

This notification is made, under the provisions of section 4 of Act I of 1894, to all whom it may concern.

A plan of the land may be inspected in the office of the Special Land Acquisition Officer, Burdwan, as well as in that of the Executive Engineer, Damodar Canal Division, Burdwan.

In exercise of the powers conferred by the aforesaid section, the Governor in Council is pleased to authorise the officers for the time being engaged in the undertaking, with their servants and workmen, to enter upon and survey the land and do all other acts required or permitted by that section.

In exercise of the powers conferred by section 17(*4*) of the Land Acquisition Act, I of 1894, as amended by Act XXXVIII of 1923, the Governor in Council is pleased to direct that provisions of section 5A of the Act shall not apply in this case.

Jessore.—No. 13187L.A.—14th September 1936.—Whereas it appears to the Governor in Council that land is likely to be required to be taken by Government at the public expense for a public purpose, viz., for widening and improvement of the portion of the Satkhira-Navaran road, in the villages of Burujbagan, Jadavpur, Khajura, Ulashi, Shamta, Pipragachi, Baganchra and Raripukhuria, jurisdiction list Nos. 77, 78, 79, 101, 126, 127, 128 and 129, respectively, thana Sarsa, pargana Mulghar, district Jessore, it is hereby notified that for the above purpose some pieces of land comprising—

Parts of cadastral survey plot Nos. 550-554 (Sheet No. 1) of village Burujbagan,
Parts of plot No. 72 of village Jadavpur,
Parts of cadastral survey plot Nos. 801-02 and 811-14 of village Khajura,
Parts of cadastral survey plot Nos. 547 and 676 (Sheet No. 2) of village Ulashi,
Parts of cadastral survey plot No. 1372 (Sheet No. 1) of village Shamta,

Parts of plot Nos. 811-12, 820-823 and 848 of village Pipragachi,

Parts of cadastral survey plot Nos. 2815, 2823 and 2888-89 (Sheet No. 3) of village Baganchra,

Parts of cadastral survey plot No. 887 (Sheet No. 2) of village Raripukhuria,

and altogether measuring, more or less, 2·42 acres, are likely to be required within the aforesaid villages of Burujbagan, Jadavpur, Khajura, Ulashi, Shamta, Pipragachi, Baganchra and Raripukhuria.

This notification is made, under the provisions of section 4 of Act I of 1894, to all whom it may concern.

A plan of the land may be inspected in the office of the Collector of Jessore.

In exercise of the powers conferred by the aforesaid section, the Governor in Council is pleased to authorise the officers for the time being engaged in the undertaking, with their servants and workmen, to enter upon and survey the land and do all other acts required or permitted by that section.

Any person interested in the above land, who has any objection to the acquisition thereof, may, within thirty days after the date on which public notice of the substance of this notification is given in the locality, file an objection in writing before the Collector of Jessore.

Calcutta.—No. 13205L.A.—14th September 1936.—The Governor in Council is pleased to cancel notification No. 11357L.A., dated the 10th September 1932, under section 4 of the Land Acquisition Act, published at page 1660, Part I of the *Calcutta Gazette* of the 15th idem, in respect of the proposed acquisition of 0·0016 of an acre of land required by the Corporation of Calcutta for splaying off the corner at No. 29, Marsden Street in Ward No. 14 of the Calcutta Municipality in the city of Calcutta.

Howrah.—No. 13208L.A.—14th September 1936.—Whereas it appears to the Governor in Council that land is likely to be required to be taken by Government at the expense of the Howrah Municipality for a public purpose, viz., for a 3 feet strip of land along the big outfall drain near Rasik Krista Banerjee lane and Uma Charan Bose lane, in the village of Ramkrishnapur, jurisdiction list No. 11, thana Sibpur, paragana Baro, district Howrah, it is hereby notified that for the above purpose two pieces of land measuring, more or less, 0·0099 of an acre, bounded on the—

Block No. I.

North—By municipal drain,

South—By land of Rambridge Lal,

East—By land of Rambridge Lal and municipal drain,

West—By municipal drain and Rashik Krishna Banerjee lane,

Block No. II.

North and West—By municipal drain.

South and East—By lands of Banwari Banerjee, Josoda Dasi and Guiram Maji.

are likely to be required within the aforesaid village of Ramkrishnapur.

This notification is made, under the provisions of section 4 of Act I of 1894, to all whom it may concern.

A plan of the land may be inspected in the office of the Collector of Howrah.

In exercise of the powers conferred by the aforesaid section, the Governor in Council is pleased to authorise the officers for the time being engaged in the undertaking, with their servants and workmen, to enter upon and survey the land and do all other acts required or permitted by that section.

Any person interested in the above land, who has any objection to the acquisition thereof, may, within thirty days after the date on which public notice of the substance of this notification is given in the locality, file an objection in writing before the Collector Howrah.

Howrah.—No. 13211L.A.—14th September 1936.—The Governor in Council is pleased to cancel the notification No. 7625L.A., dated the 31st May 1935, under section 4 of the Land Acquisition Act, published at page 981, Part I of the *Calcutta Gazette* of the 6th June 1935, in respect of the proposed acquisition of 0·073 of an acre of land required by the Bally Municipality for widening municipal lane from Grand Trunk road in Ward No. III, in the village of Belur Krishnachandrapur, jurisdiction list No. 12, thana Bally, pargana Boro, district Howrah.

Malda.—No. 13214L.A.—14th September 1936.—Whereas it appears to the Governor in Council that land is likely to be required to be taken by Government at the expense of the Englishbazar Municipality for a public purpose, viz., for a Muhammadan burial ground, in the village of Maheshmati, jurisdiction list No. 66, thana Englishbazar, pargana Bhatiagopalpur, district Malda, it is hereby notified that for the above purpose a piece of land comprising cadastral plot Nos. 9 and 10, and measuring, more or less, 3·59 acres, is likely to be required within the aforesaid village of Maheshmati.

This notification is made, under the provisions of section 4 of Act I of 1894, to all whom it may concern.

A plan of the land may be inspected in the office of the Collector of Malda.

In exercise of the powers conferred by the aforesaid section, the Governor in Council is pleased to authorise the officers for the time being engaged in the undertaking, with their servants and workmen, to enter upon and survey the land and do all other acts required or permitted by the section.

Any person interested in the above land, who has any objection to the acquisition thereof, may, within thirty days after the date on which public notice of the substance of this notification is given in the locality, file an objection in writing before the Collector of Malda.

ERRATUM.

Jessore.—No. 13190L.A.—14th September 1936.—In notification No. 4471 L.A., dated the 18th March 1936, under section 4 of the Land Acquisition Act, I of 1894, published at pages 630-31, Part I of the *Calcutta Gazette* of the 26th idem, in respect of the proposed acquisition of 104·60 acres of land required for the improvement and widening of the Satkhira-Navaran road in the villages of Buruj Bagan, etc., district Jessore—

Read "cadastral survey plot Nos. 1313-14" *for* "cadastral survey plot Nos. 1213-14" against village Barabaria—Sheet No. 2.

Read "cadastral survey plot No. 1621" *for* "cadastral survey plot No. 1622" against village Samta—Sheet No. 2.

Omit "cadastral survey plot No. 2288," from against village Bagachra—Sheet No. 3.

Read "cadastral survey plot Nos. 668-69 and 673" *for* "cadastral survey plot Nos. 668-70" against village Pipragachi.

Read "cadastral survey plot No. 137" *for* "cadastral survey plot No. 107" against village Baguia—Sheet No. 1.

DECLARATIONS.

Burdwan.—No. 13095L.A. 11th September 1936. Whereas it appears to the Governor in Council that additional land is required to be taken by Government at the public expense for a public purpose, viz., for the existing road from chainage 18 and 15 feet to chainage 19 and 35 feet of distributary No. 10, branch canal, Damodar Canal Project, in the village of Nrisinhapur, jurisdiction list No. 29, in thana Bhatar, pargana Burdwan, district Burdwan, it is hereby declared that for the above purpose a piece of land comprising parts of cadastral survey plot Nos. 150 and 401, and measuring, more or less, 0·002 of an acre, is required within the aforesaid village of Nrisinhapur.

This declaration is made, under the provisions of section 6 of Act I of 1894, to all whom it may concern.

A plan of the land may be inspected in the office of the Special Land Acquisition Officer, Burdwan, as well as in that of the Executive Engineer, Damodar Canal Division, Burdwan.

Burdwan.—No. 13098L.A. 11th September 1936.—Whereas it appears to the Governor in Council that land is required to be taken by Government at the public expense for a public purpose, viz., for safety of crops at mile 11 between chainage 45·60 and 49·30, main canal, Damodar Canal Project, in the village of Nala, jurisdiction list No. 20, in thana Burdwan, pargana Burdwan, district Burdwan, it is hereby declared that for the above purpose a piece of land comprising part of cadastral survey plot No. 811, and measuring, more or less, 0·02 of an acre, is required within the aforesaid village of Nala.

This declaration is made, under the provisions of section 6 of Act I of 1894, to all whom it may concern.

A plan of the land may be inspected in the office of the Special Land Acquisition Officer, Burdwan, as well as in that of the Executive Engineer, Damodar Canal Division, Burdwan.

Burdwan.—No. 13101L.A. 11th September 1936.—Whereas it appears to the Governor in Council that land is required to be taken by Government at the public expense for a public purpose, viz., for pitching and outfall channel of outlet at mile 2 chainage 40 and 65 feet of distributary No. 11, branch canal, Damodar Canal Project, in the village of Chandipur, jurisdiction list No. 41, in thana Bhatar, pargana Mazafarsahi, district Burdwan, it is hereby declared that for the above purpose a piece of land comprising part of cadastral survey plot No. 2010, and measuring, more or less, 0·017 of an acre is required within the aforesaid village of Chandipur.

This declaration is made, under the provisions of section 6 of Act I of 1894, to all whom it may concern.

A plan of the land may be inspected in the office of the Special Land Acquisition Officer, Burdwan, as well as in that of the Executive Engineer, Damodar Canal Division, Burdwan.

Excise.

NOTIFICATIONS.

Minister-in-charge: The Hon'ble Sir Bijoy Prasad Singh Roy, Kt.

Chittagong.—No. 982 Ex.—7th September 1936.—Babu Gunendra Nath Ray Choudhuri, Superintendent of Excise and Salt, is posted to Chittagong on the expiry of his leave.

Jalpaiguri.—No. 986 Ex.—9th September 1936.—Mr. A. E. Smith, Superintendent of Excise and Salt, Jalpaiguri, is allowed leave on average pay for the period from the 5th October to 17th October 1936, under rule 81 (*b*) (*ii*) of the Fundamental Rules.

J. B. KINDERSLEY,

Secy. to the Govt. of Bengal (offg.).

Orders by the Commissioner of Excise and Salt, Bengal.

No. 35Exc. 11th September 1936.—Maulvi Jalaluddin Khan, Inspector of Excise and Salt, employed on Matches (Excise) work in Calcutta, is allowed leave on average pay for one month and twenty-three days, with effect from 31st October 1936, under rule 81(*b*)(*ii*) of the Fundamental Rules. He is likely to return to his old post on the expiry of his leave.

No. 36Exc.—11th September 1936.—Babu Santosil Barua, Inspector of Excise and Salt, Calcutta, is allowed leave on average pay from 1st October 1936 or any subsequent date up to 23rd December 1936, inclusive, under rule 81 (*b*)(*ii*) of the Fundamental Rules. He is likely to return to his old post on the expiry of his leave.

No. 37Exc.—12th September 1936.—Babu Sashi Bhusan Pal, temporary Inspector of Excise and Salt, Calcutta, is allowed leave on average pay for six days, with effect from the 12th October 1936, under rule 81 (*b*) (*ii*) of the Fundamental Rules. He will, on the expiry of his leave, return to his old post.

A. S. LARKIN,

Commr. of Excise and Salt, Bengal (offg.).

BENGAL LEGISLATIVE COUNCIL DEPARTMENT.

CORRIGENDUM.

No. 2144 L.C.—8th September, 1936.—In this department notification No. 2096 L.C., dated the 31st August, 1936, published at page 2099 of Part I of the *Calcutta Gazette*, dated the 3rd September, 1936, line 5, *for* the figures and brackets 14(*2*) *read* 14(*7*).

K. ALI AFZAL, *Asst. Secy.*,

for *Secy. to the Bengal Legis. Council (on leave).*

BOARD OF REVENUE, BENGAL.

NOTIFICATION.

No. 13022Elec.—14th September 1936.—It is hereby notified that Mr. T. Chapman-Mortimer, the candidate for election to the Legislative Assembly from the Bengal European constituency, filed on the 9th September 1936 his return of election expenses and the declaration in respect thereof as required by clauses (*1*) and (*3*) of rule 19 of the Legislative Assembly Electoral Rules and Regulations, 1934. This can be inspected in the office of the Board of Revenue on payment of a fee of Re. 1 between the hours of 11 a.m. and 3 p.m. for one week from the publication of this notification in the gazette.

S. BANERJEE,

Secy., Board of Revenue, Bengal.

TREASURY NOTICES.

Jessore, the 3rd September 1936.

Sub-Deputy Collector Babu Dhirendra Chandra Nag has temporarily been placed in executive charge of the Jessore Treasury, with effect from the forenoon of the 3rd September 1936, and is authorised to draw bills on other treasuries.

S. DUTT, *Collector.*

Orders by the Deputy Accountant-General, Bengal.

The Treasury Buildings, the 12th September 1936.

It is notified that the refund order book No. 6405 containing 50 orders is in use by the Income-Tax Office, Central Salaries Circle, Calcutta, with effect from the 21st August 1936.

It is notified that the refund order book No. 6406 containing 50 orders is in use by the Income-Tax Office, Central Salaries Circle, Calcutta, with effect from the 4th September 1936.

C. BHASKARAIYA,

Dy. Accountant-General, Bengal.

ORDERS BY COMMISSIONERS OF DIVISIONS.

Burdwan Division—Chinsura.

No. 2293L.S.-G.—8th September 1936.—In exercise of the powers conferred by rule 53A of the election rules under the Local Self-Government Act, as amended by Government notification No. 2898L.S.-G. of the 5th July 1934, the undersigned determines that, out of twenty-two seats to which members are to be elected to the Midnapore district board by the Sadar, Contai, Tamluk, Ghatal and Jhargram local boards under section 7 of the Bengal Local Self-Government Act, 1885 (Bengal Act III of 1885), two seats shall be reserved for the Muhammadan community which has been declared to be a minority community in Government notification No. 6430L. S.-G. of the 19th August 1936 for the purpose of election of members to the said district board. The number of members to be elected by each local board to the seats so reserved shall be as follows:—

Sadar local board	...	1
Contai local board	...	nil
Tamluk local board	...	1
Ghatal local board	...	nil
Jhargram local board	...	nil

No. 2297L. S.-G.—8th September 1936.—In exercise of the powers conferred by rule 19 of the election rules under the Local Self-Government Act, as amended by Government notification No. 2898L.S.-G. of the 5th July 1934, the undersigned determine that, out of twenty seats to which members are to be elected in the Sadar local board in the district of Midnapore, under section 9 of the Bengal Local Self-Government Act, 1885 (Bengal Act III of 1885), two seats shall be reserved for the Muhammadan community which has been declared to be a minority community in Government notification No. 6430L. S.-G. of the 19th August 1936 for the purpose of election of members of the said local board.

No. 2298L. S.-G.—8th September 1936.—In exercise of the powers conferred by rule 19 of the election rules under the Local Self-Government Act, as amended by Government notification No. 2898L. S.-G. of the 5th July 1934, the undersigned determines that, out of eighteen seats to which members are to be elected in the Contai local board in the district of Midnapore, under section 9 of the Bengal Local Self-Government Act, 1885 (Bengal Act III of 1885), one seat shall be reserved for the Muhammadan community which has been declared to be a minority community in Government notification No. 6863L. S.-G. of the 2nd September 1936 for the purpose of election of members of the said local board.

No. 2299L.S.-G.—8th September 1936.—In exercise of the powers conferred by rule 19 of the election rules under the Local Self-Government Act, as amended by Government notification No. 2898L. S.-G. of the 5th July 1934, the undersigned determines that, out of sixteen seats to which members are to be elected in the Tamluk local board in the district of Midnapore, under section 9 of the Bengal Local Self-Government Act, 1885 (Bengal Act III of 1885), two seats shall be reserved for the Muhammadan community which has been declared to be a minority community in Government notification No. 6430L. S.-G. of the 19th August 1936 for the purpose of election of members of the said local board.

No. 2300L. S.-G.—8th September 1936.—In exercise of the powers conferred by rule 19 of the election rules under the Local Self-Government Act, as amended by Government notification No. 2898L.S.-G. of the 5th July 1934, the undersigned determines that, out of fourteen seats to which members are to be elected in the Ghatal local board in the district of Midnapore, under section 9 of the Bengal Local Self-Government Act, 1885 (Bengal Act III of 1885), one seat shall be reserved for the Muhammadan community which has been declared to be a minority community in Government notification No. 6863 L. S.-G. of the 2nd September 1936 for the purpose of election of members of the said local board.

No. 5288J.G.—8th September 1936.—Babu Phani Bhusan Ghosh, Sub-Deputy Magistrate and Sub-Deputy Collector of Vishnupur, in the district of Bankura, is granted, under rule 81(*b*) (*ii*) of the Fundamental Rules, leave on average pay from 5th October 1936 to 17th October 1936, both days inclusive.

No. 5293J. G.—8th September 1936.—Babu Haridas Chatterjee, Sub-Deputy Magistrate and Sub-Deputy Collector of Bankura Sadar, is temporarily transferred to Vishnupur subdivision of the same district to be employed on general duty, *vice* Babu Phani Bhusan Ghosh, granted leave from 5th to 17th October 1936. The transfer is made in the public interest.

No. 1478M.—8th September 1936.—It is hereby notified for general information, under section 50 of the Bengal Municipal Act of 1932 (XV of 1932), that the Commissioners of the Vishnupur Municipality in the district of Bankura by a resolution passed at their meeting held on the 15th August 1936 duly elected Maulvi Nasir Ahmed to be their Chairman, *vice* Babu Gurudas Biswas, granted leave.

No. 5298J.G.—9th September 1936.—In accordance with the provisions of rule 63(*2*) of Chapter IV of the Bengal Jail Code, Volume I, I hereby appoint Miss Bibhabati Devi, B.A., B.T., to be a non-official lady visitor of the Burdwan Jail in the district of Burdwan for a period of two years from the date of this notification.

No. 5350 J.G.—11th September 1936.—Md. Lutfur Rahman Khan, Sub-Deputy Collector, on probation, in the district of Bankura, is granted, under rule 10 of the Bengal Services (Revision of Leave) Rules, 1934, earned leave for six days, from the 12th October 1936 to 17th October 1936, both days inclusive.

No. 5387J.G.—12th September 1936.—Babu Amulya Bhusan Mukharji, Sub-Deputy Collector, Birbhum Sadar, is appointed to be Circle Officer of Pingla, in the district of Midnapore.

The transfer is made in the public interest.

No. 5394J.G.—12th September 1936.—The orders contained in this office notification No. 5036J.G. of the 26th August 1936, appointing temporarily Babu Satish Chandra Bose, Sub-Deputy Collector, Midnapore Sadar, as Circle Officer of Burdwan Sadar, are cancelled.

No. 5402J.G.—12th September 1936.—Mr. Nilratan Banerji, Sub-Deputy Magistrate and Sub-Deputy Collector, on probation, is granted earned leave for fifteen days, under rule 10 of the Bengal Services (Revision of Leave) Rules, 1934, from 2nd September 1936 to 16th September 1936, both days inclusive.

L. B. BURROWS, *Commissioner.*

Howrah, the 9th September 1936.

It is hereby notified for general information that, under section 13 of the Bengal Village Self-Government Act, 1919 (Bengal Act V of 1919), Shaikh Badrul Haque has been duly elected to be a member of Bankra union board within Domjur police-station in the Sadar subdivision of the Howrah district, *vice* Munshi Sadiduddin Laskar, deceased.

S. C. SINHA, *District Magistrate.*

Burdwan, the 10th September 1936.

It is hereby notified for general information that a by-election will be held for appointment of a gentleman under section 3(*2*) of the Bengal Mining Settlement Act, II of 1912, as a member of the Asansol Mines Board of Health to fill up the vacancy caused by the resignation of Mr. D. M. Archibald.

The votes will be counted on 4th December 1936, at 12 noon, at the office of the District Magistrate, Burdwan, and the voting papers will be issued to all registered mine owners by 3rd November 1936.

Any mine owner or his representative may on or before 4th October 1936 apply to have his name registered (if not already enrolled). Such application which may be made by post shall contain full particulars of the collieries or mines of which the applicant is owner or representative.

H. R. SEN, for *District Magistrate.*

Chinsura, the 10th September 1936.

No. 8670 J.G.—It is hereby notified for general information that, under section 13 of the Bengal Village Self-Government Act, 1919 (Bengal Act V of 1919), read with rule 35 of the rules for the election and appointment of members of union boards, etc., Babu Bhabatosh Das has been duly elected to be a member for Ward No. I of the Dhoniakhaly union board in police-station Dhoniakhaly in the Sadar subdivision of the district of Hooghly, *vice* Babu Sarat Chandra Dutta, resigned.

Chinsura, the 12th September 1936.

No. 8719J.G.—It is hereby notified for general information that, under section 13 of the Bengal Village Self-Government Act, 1919 (Bengal Act V of 1919), read with rule 36 of the rules for the election and appointment of members of union boards, etc., Mr. Sanat Kumar Mukerjee has been appointed to be a member of the Bhanderhaty union board in police-station Dhanikhaly in the Sadar subdivision of the district of Hooghly, *vice* Babu Atul Chandra Chaudhury, deceased.

S. P. GHOSH, *District Magistrate.*

Orders by the Deputy Inspector-General of Police, Burdwan Range.

Chinsura.—No. 6912.—11th September 1936.—Babu Harendra Bijay Basu, officiating Inspector, Bankura, is, on relief by Khan Sahib Mafizuddin Ahmad, Inspector, appointed to act as such in Hooghly, *vice* Babu Bidhu Bhushan Pal, Inspector, temporarily employed in the District Intelligence Branch, Hooghly.

Babu Kshitish Chandra Mukharji who is at present officiating as Inspector in the above vacancy, will, on relief, revert to his substantive rank of Sub-Inspector in Birbhum.

The transfers are ordered in the interests of public service.

J. M. MACKENZIE,

Deputy Inspector-General of Police, (offg.)

Chittagong Division—Chittagong.

No. 4554G.—8th September 1936.—Babu Heramba Nath Bhattacharji, Sub-Deputy Collector on leave, who has been posted to the Chittagong Division in Government notification No. 9826A., dated the 26th August 1936; is posted to Muradnagar in the district of Tippera to work as Circle Officer.

J. D. V. HODGE, *Commissioner (offg.).*

Noakhali, the 4th September 1936.

No. 9011J.—It is hereby notified for general information that, under section 13 of the Bengal Village Self-Government Act (Act V of 1919) read with rule 35 of the rules for election and appointment of members of union boards, Munshi Joynal Abedin has been duly elected to be a member of union board No. 13 Chatkhil, within police-station Ramgonj, in the Sadar subdivision of the district of Noakhali, *vice* Nowab Ali Bhuya, deceased.

R. A. DUTCH, *District Magistrate.*

Chittagong, the 12th September 1936.

It is hereby notified for general information that, under section 13 of the Bengal Village Self-Government Act, 1919 (Bengal Act V of 1919), read with rule 35 of the rules for the election and appointment of members of union boards, the following gentlemen have been duly elected to be members of the undermentioned union boards within the police-station noted above each in the Sadar (A) subdivision of the Chittagong district:—

Doublemoorings police-station.

Halishahar union board No. III.

Munshi Amir Ali Serang, *vice* Md. Nurul Islam, deceased.

Rangunia police-station.

Mariamnagar union board No. IV.

Maulvi Abul Hashem, *vice* Babu Mohim Chandra Dutta, resigned.

H. BANERJEE, *Addl. District Magistrate.*

Orders by the Deputy Inspector-General of Police, Bakarganj Range.

Barisal.—No. 4386.—10th September 1936. —Babu Heramba Mohan Guha, Court Inspector, Chittagong, is granted 4 months' leave on average pay, under rule 81(*b*)(*ii*) of the Fundamental Rules, with effect from the date of relief, and is transferred to Tippera in exchange with Babu Nagendra Bihari Basu, Court Inspector of the latter district.

Sub-Inspector Amulya Mohan Chakrabatti of Noakhali is transferred to Tippera, *vice* Sub-Inspector Fazlur Rahman, dismissed. He is appointed to act as Court Inspector, *vice* Babu Heramba Mohan Guha, Court Inspector, granted leave.

The transfers are ordered in the interests of public service.

G. H. MANNOOCH,

Deputy Inspector-General of Police (offg.).

Dacca Division—Dacca.

No. 4704J.—11th September 1936.—Babu Subodh Chandra Das Gupta, Sub-Deputy Collector, who has been posted to the Dacca Division in Government notification No. 10367A., dated the 1st September 1936, is appointed to be Circle Officer of Barhatta Circle in the Netrakona subdivision of the district of Mymensingh.

No. 4710J.—11th September 1936.—Babu Atindra Nath Mukherji, Sub-Deputy Collector, Bakarganj, is transferred to Kishoreganj in the district of Mymensingh on general duty.

No. 4727J.—11th September 1936.—It is hereby notified for general information that at the by-election to fill up a vacancy caused by the removal of a Commissioner under section 62(2) (*c*) of the Bengal Municipal Act, 1932, in Ward No. VII of the Jamalpur Municipality in the district of Mymensingh, Babu Nagendra Nath Shome was declared duly elected as Commissioner for that ward under rule 22 (2) of the Municipal Election Rules.

W. H. NELSON, *Commissioner.*

Dacca, the 9th September 1936.

No. 359-360V.S.-G.—It is hereby notified for general information that, under section 13 of the Bengal Village Self-Government Act, V of 1919, Munshi Md. Ala Baksh Pradhan has been elected to be a member of the Siddhirganj union board in Fatulla police-station in Narayanganj subdivision of the district of Dacca, *vice* Kamini Kumar Gope, deceased.

No. 359-360V.S.-G.—It is hereby notified for general information that, under section 13 of the Bengal Village Self-Government Act, V of 1919, Munshi Sadagar Sardar has been elected to be a member of the Kulagachia union board in Narayanganj police-station in Narayanganj subdivision of the district of Dacca, *vice* Panchananda Das, deceased.

No. 359-360V.S.-G.—It is hereby notified for general information that, under section 13 of the Bengal Village Self-Government Act, V of 1919, Munshi Asrab Ali Sarker has been elected to be a member of the Khagkanda union board in Araihazar police-station in Narayanganj subdivision of the district of Dacca, *vice* Maulvi Moslemddin, removed.

No. 359-360V.S.-G.—It is hereby notified for general information that, under section 13 of the Bengal Village Self-Government Act, V of 1919, Munshi Syed Ali has been elected to be a member of the Uchitpura union board in Araihazar police-station in Narayanganj subdivision of the district of Dacca, *vice* Munshi Md. Saheb Ali, deceased.

M. M. STUART, *District Magistrate.*

Orders by the Deputy Inspector-General of Police, Dacca Range.

Dacca.—No. 3672.—10th September 1936. —Maulvi Abdur Razak, Inspector, Dacca, is granted 4 months and 9 days' leave on average pay with effect from the 15th September 1936, with permission to affix to his leave the gazetted holidays from the 24th December 1936 to the 1st January 1937.

Sub-Inspector Umanath Mukharji of Dacca is appointed to act as Inspector in the vacancy.

A. D. GORDON,

Deputy Inspector-General of Police.

Presidency Division—Calcutta.

No. 1780M. — 4th September 1936.—In exercise of the power conferred by section 435 of the Bengal Municipal Act, 1932 (Bengal Act XV of 1932), which has been delegated to the Commissioners of Divisions in Government notification No. 5780M., dated the 28th September 1935, I hereby extend that section to the Halisahar Municipality in the district of the 24-Parganas.

No. 2143R.G. — 5th September 1936.— Babu Nripendra Kumar Sen, Sub-Deputy Collector, Kandi, Murshidabad, is granted leave on average pay for twenty-five days, under rule 81(*b*) (*iii*) of the Fundamental Rules, with effect from the 7th August 1936.

No. 2181R.G.—10th September 1936.—Babu Phanindra Mohan Datta, Sub-Deputy Collector, Nadia, is granted leave on average pay for thirteen days, under rule 81(*b*)(*ii*) of the Fundamental Rules, with effect from the 5th October 1936.

No. 2351L.S.-G.— 10th September 1936.—It is hereby notified for general information that, under rule 23 of the dispensary manual, Babu Sourindra Nath Gangopadhaya has been appointed to be a member of the managing committee of the Asannagar Charitable Dispensary in the district of Nadia, in place of Babu Jogendra Nath Mojumdar, resigned.

A. J. DASH, *Commissioner.*

Orders by the Deputy Inspector-General of Police, Presidency Range.

Calcutta.—No. 5126.—7th September 1936.—Sub-Inspector Ramdas Maitra of Murshidabad is appointed to act as Inspector in the 24-Parganas, *vice* Maulvi Enayet Husain, Inspector of that district, temporarily employed in the C. I. D., Bengal.

The transfer is effected in the interests of public service.

B. N. BANARJI,

Deputy Inspector-General of Police (offg.).

Rajshahi Division—Jalpaiguri.

No. 3565J.—7th September 1936.—Maulvi Zillur Rahman, Sub-Deputy Magistrate and Sub-Deputy Collector, Rajshahi, is allowed leave on average pay for six weeks, with effect from 31st October 1936, under rule 81(*b*) (*ii*) of the Fundamental Rules.

No. 3591J.—8th September 1936.—Under the provisions of rule 63(*2*) of Chapter IV of the Bengal Jail Code, I hereby appoint Mrs. R. E. Duncan to be a non-official lady visitor of the Darjeeling Jail for a period of two years.

[*To be substituted for this office notification bearing the same number and date.*]

No. 4079M.—27th August 1936.—Whereas in Government notification No. 6428L. S.-G., dated the 19th August 1936, the Muhammadan community in the area under the authority of the district board of Jalpaiguri has been declared to be a minority community for the purposes of section 10A of Act III of 1885 and as the said community forms 23·93 per cent. of the total population in the district board area, I, therefore, determine in exercise of the authority vested in me under rule 53A of the election rules under the Local Self-Government Act that two seats out of twelve elected seats in the district board shall be reserved for the minority community.

The minority community having a preponderance in the Sadar local board area I direct that the Sadar local board shall elect members to the two reserved seats.

L. R. FAWCUS, *Commissioner (offg.).*

Pabna, the 12th September 1936.

No. 6283J.—It is hereby notified for general information that, under section 13 of the Bengal Village Self-Government Act, 1919 (Bengal Act V of 1919), Maulvi Syed Abu Yusuf has been appointed to be a member of the Shahzadpur union board within the Shahzadpur police-station in the Sirajganj subdivision of the Pabna district, *vice* Maulvi Muhammad Aziz Meser, deceased.

Under rule 32A of the election rules under the Local Self-Government Act, it is hereby notified that the elections to the Sirajganj local board, district Pabna, will be held for the different thanas on the dates specified against each, as shown below:—

Kazipur thana—9th November 1936.
Belkuchi thana—9th November 1936.
Taras thana—9th November 1936.
Chauhali thana—10th November 1936.
Sirajganj thana—11th November 1936.
Ullapara thana—11th November 1936.
Kamarkhand thana—12th November 1936.
Raiganj thana—12th November 1936.
Shahazadpur thana—12th November 1936.

MD. MAHMUD, *District Magistrate.*

Orders by the Deputy Inspector-General of Police, Rajshahi Range.

Jalpaiguri.—No. 6692.—11th September 1936.—Maulvi Muhammad Ibrahim, officiating Inspector, Rajshahi, is granted 15 days' leave on average pay, under rule 81 (*b*) (*ii*) of the Fundamental Rules, with effect from the date on which he may avail himself of it. He will revert to his substantive rank of Sub-Inspector during the period of leave.

2. With effect from the date of assuming charge Sub-Inspector Haripada Das Gupta of Rajshahi, is appointed to act until further orders as Inspector, *vice* Babu Nirode Chandra Mukharji, Inspector, Rajshahi, temporarily employed in the District Intelligence Branch, Rajshahi.

Babu Annada Prasanna Ghosh, Inspector, Dinajpur, is granted 4 months' leave on average pay, under rule 81 (*b*) (*ii*) of the Fundamental Rules, with effect from the 31st October 1936 with permission to prefix to his leave the gazetted holidays from the 18th to the 30th October 1936, both days inclusive.

E. B. JONES,

Deputy Inspector-General of Police.

Registered No. C207

The Calcutta Gazette

THURSDAY, SEPTEMBER 17, 1936.

PART IA

Orders and Notifications by the Government of India republished for general information.

FINANCE DEPARTMENT (CENTRAL REVENUES).

NOTIFICATIONS.

CUSTOMS.

Simla, the 5th September 1936.

No. 58.—In exercise of the powers conferred by section 23 of the Sea Customs Act, 1878 (VIII of 1878), the Governor General in Council is pleased to direct that the following further amendment shall be made in the Notification of the Government of India in the Finance Department (Central Revenues), No. 33-Customs, dated the 22nd June 1935, namely:—

In the said notification, in Schedule I-Import Duties, under the head "A-General" after entry 28-G, the following entry shall be inserted, namely:—

"28-H Ale and beer in containers other than bottles.	So much of the duty as is in excess of the duty that would have been leviable if such containers were bottles.

No. 59.—In exercise of the powers conferred by section 19 of the Sea Customs Act, 1878 (VIII of 1878), the Governor General in Council is pleased to direct that the following amendment shall be made in the notification of the Government of India in the Finance Department (Central Revenues), No. 55-Customs, dated the 9th December 1933, namely:—

In Form II of the forms annexed to the said notification, for the words and brackets "To be signed by the customs officer and forwarded to the Director-General of Posts and Telegraphs (Wireless Branch), New Delhi" the following shall be substituted, namely:—

"To be signed by the customs officer and forwarded to such official of the department of Posts and Telegraphs as may be appointed in this behalf by the Director General of Posts and Telegraphs".

W. W. NIND,
Joint Secy. to the Govt. of India.

HOME DEPARTMENT.

NOTIFICATION.

JUDICIAL.

Simla, the 2nd September 1936.

No. F. 25/3/36.—In pursuance of proviso (*i*) to sub-section (2) of section 101 of the Government of India Act, the Governor General in Council is pleased to appoint Dr. Bijan Kumar Mookerjee, Acting Senior Government Pleader, to act as an Additional Judge of the High Court of Judicature at Fort William in Bengal for the period from the 9th November 1936 to the 29th August 1937, both days inclusive.

J. A. THORNE,
Joint Secy. to the Govt. of India.

DEPARTMENT OF INDUSTRIES AND LABOUR.

NOTIFICATION.

ECCLESIASTICAL.

Simla, the 3rd September 1936.

No. Eccl.-32.—In pursuance of rule 32 of the Indian Church Statutory Rules, 1929, the Governor General in Council, with the concurrence of the Bishop of Calcutta, is pleased to make the following rules for the constitution of Church Committees for Maintained Churches served by Chaplains as defined in section 1 of the Indian Church Act, 1927 (17 and 18, Geo. 5, C. 40):—

Rules relating to Church Committees.

Rules for Church Committees for Maintained Churches served by Chaplains as defined in section 1 of the Indian Church Act, 1927.

(Where so desired by the Chaplain, the rules laid down by the Government of India in 1868 may, with the sanction of the Bishop of the Diocese, be used as an alternative to these rules.)

1. A Church Committee shall be appointed for each church, provided that if in any station more than one church is served by the same chaplain it shall not be obligatory to appoint separate committees for these churches.

2. (*1*) A Church Committee shall consist of the Chaplain together with a convenient number of members appointed by nomination and election as hereinafter provided in accordance with the rules laid down for the Diocese.

(*2*) In any station where two members in addition to the Chaplain are deemed sufficient one shall be nominated by the Chaplain and the other shall be elected by the communicant members of the congregation from among themselves. In other cases, subject to the provisions of rule 10, at least half the members of a Church Committee shall be elected by the communicant members from among themselves. The other places on the Committee may be filled by nomination by the Chaplain, or otherwise in accordance with any rules which may have been sanctioned for the congregation under rule 10.

(*3*) The names of all nominated and elected members of the Church Committee shall be forwarded to the Bishop immediately after their appointment.

3. The Church Committee shall be appointed annually and the date on which they shall assume office shall be laid down in the bye-laws of each Committee.

4. In the event of a vacancy occurring among—

(*a*) the nominated members, the Chaplain shall be empowered to nominate a substitute:

(*b*) the elected members, the remaining elected members shall be empowered to co-opt a communicant member of the congregation as a substitute. If the vacany leaves no elected member on the Church Committee, it shall be filled by election as provided in rule 2 (*2*):

Provided that, should any member of the Church Committee vacate his office during a vacancy in the incumbency of the station or Church the other member or members shall refer the matter to the Bishop for his direction.

5. The Church Committee shall ordinarily meet not less than once a quarter and may be convened at any time by the Chaplain or, if there is a vacancy in the incumbency, by the person appointed by the Bishop to take temporary charge of the parish.

6. (*1*) Not less than one-third (subject to a minimum of two) of the total number of members shall form a quorum at a meeting of a Church Committee.

(*2*) The Chaplain shall be the Chairman of the Church Committee. In the absence of the Chaplain, the members present shall elect a Chairman for the meeting from among themselves.

(*3*) The Chairman shall have a casting as well as a deliberative vote.

7. The Church Committee will have no legal status as a corporate body and no powers beyond those specified in these rules.

8. The duties of the Church Committee shall be:—

(*i*) To assist the Chaplain in the distribution of money gathered at the offertory in accordance with the Rubric at the end of the Communion Service, due attention being paid to any particular recommendation made by the Bishop;

(*ii*) to assist in collecting the alms of the congregation and in drawing up an annual report of their amount and distribution which after due audit shall be published to the congregation and sent to the Bishop;

(*iii*) to assist in the management and expenditure of any other Church funds;

(*iv*) to share with the Chaplain the duty and responsibility of assigning seats in the Church and reserving official seats for such persons and their families as may be indicated in any order of Government;

(*v*) to make representation to the Bishop on matters connected with ecclesiastical affairs of the Church or station, to meet him or the Archdeacon on visitation for conference on such matters, and to answer such circulars and letters of enquiry as the Bishop or the Archdeacon may address to them;

(*vi*) to consult with the Chaplain on all matters connected with the fabric of the Church and Parsonage, if the building be public property, and to assist the Chaplain in the care of the cemetery;

(*vii*) if the Chaplain has left the station without making arrangements for Divine Service, or is prevented from doing so, to make such arrangements, provided that, without the sanction of the Chaplain or the Bishop, no service shall be conducted in the Church by any person other than a clergyman or Lay Reader holding the Bishop's Licence or a member of the Church Committee;

(*viii*) to consider with the Chaplain the adoption in their parish church, when so desired, of any alteration in the Book of Common Prayer from time to time authorised by the Church of England in England and of any form of service in substitution for any of the forms provided therein which may have been sanctioned for use in the Province or Diocese (see Canon III of Chapter XXII, Canons and Rules of the Church of India);

(*ix*) to appoint a person to take charge, during the temporary absence of the Chaplain or during a vacancy in the incumbency, of the Church plate, books, linen, and all other property, and deliver them up with an inventory to the Chaplain on his return or to the new Chaplain on appointment; and

(*x*) to make, when necessary and subject to the approval of the Bishop, bye-laws to supplement these rules, in so far as they are not inconsistent with these rules.

9. The acceptance of the duty of acting as a member of the Church Committee is purely voluntary. While the members of the Church Committee are responsible to Government for the due care of Church property, neither the Committee nor any member thereof shall be held responsible for any loss or damage to the Church property unless such damage or loss shall have been incurred by their default.

10. Where owing to the existence of special Trusts or long established custom, it is impossible or inexpedient to enforce in all respects the Rules above set out, the Bishop shall have power to sanction such modifications as in his opinion are justified, and shall report the same to the Local Government or Administration for information.

11. The powers vested in the Bishop under these rules shall in his absence be exercised by his Commissary.

12. When an interpretation of any doubtful point in these rules is required resort is to be had to the Bishop, who if in doubt shall refer the matter to the Metropolitan, who may at his discretion refer it to the Governor General in Council for a decision.

13. Nothing in these rules shall prevent the formation in a parish of a representative body (or Vestry) of parishioners to assist and advise the Chaplain in the exercise of his duties, but the Chaplain and Church Committee shall be *ex-officio* members of such a Vestry and the Vestry shall not be competent by any rules or resolutions to assume the responsibilities and duties which are by these rules assigned to the Church Committee.

A. G. CLOW,
Secy. to the Govt. of India.

LEGISLATIVE DEPARTMENT.

NOTIFICATION.

Simla, the 29th August, 1936.

No. F. 44/36-E.—Mr. A. deC. Williams, I.C.S., Deputy Secretary to the Government of India, Legislative Department, has been granted, by the High Commissioner for India, an extension of leave on average pay for seven days from the 29th October, 1936, in continuation of the leave granted to him, *vide* Legislative Department notification No. F. 44/36-E., dated the 1st April, 1936.

G. H. SPENCE,
Secy. to the Govt. of India.

FOREIGN AND POLITICAL DEPARTMENT.

NOTIFICATIONS.

Simla, the 2nd September 1936.

No. 515-G.—The Governor General in Council is pleased to recognise the appointment of Monsieur F. de M. Braganca as Acting Honorary Consul-General for Cuba at Calcutta, during the absence of Monsieur F. Bonachea.

The 3rd September 1936.

No. 517-G.—The Governor General in Council is pleased to recognise the appointment of Mr. G. A. Georgiadi as Honorary Deputy Consul in Charge of the Consulate-General for Greece at Calcutta, during the absence of Mr. M. Presvelos.

H. A. F. METCALFE,
Foreign Secy. to the Govt. of India.

Registered No. C207

The Calcutta Gazette

THURSDAY, SEPTEMBER 17, 1936.

PART IB

Educational Notices.

Office of the Director of Public Instruction, Bengal.

NOTIFICATION.

Calcutta, the 31st August 1936.

The Prasanna Kumar Tagore Law Scholarship of Rs. 20 a month is awarded to Ganesh Chandra Phukan, who passed the Final Law Examination held in January 1936, from the University Law College, Calcutta, for six months, with effect from 1st June 1936.

J. M. BOTTOMLEY,
Director of Public Instrn., Bengal.

Office of the Director of Public Instruction, Bengal.

NOTIFICATION.

Calcutta, the 3rd September 1936.

Subject to the usual conditions of good conduct and satisfactory progress, the Krishna Chandra Sarkar Scholarship of Rs. 15 a month is awarded to Arun Kumar Sen Gupta, who passed the last I. A. Examination from the Rajshahi College.

The scholarship is tenable at the Rajshahi College for two years, with effect from the 1st June 1936.

J. M. BOTTOMLEY,
Director of Public Instrn., Bengal.

Board of Intermediate and Secondary Education, Dacca.

NOTIFICATION.

Ramna, the 1st September 1936.

Senior Jack Muhammadan Settlement Scholarships, 1936.

No. 6287.—Subject to the usual conditions of good conduct and satisfactory progress, the two Senior Jack Muhammadan Settlement Scholarships attached to the University of Dacca, of the value of Rs. 90 each per annum, are awarded to the following students:—

1. Azizar Rahman Mallick—First Year B.A. Class.
2. Abu Muhammad Shamsuddin—First Year B.A. Class.

2. The scholarships are tenable at the University of Dacca for two years, with effect from the 1st July 1936.

3. The scholars must reside in the Muslim Hall of the Dacca University.

J. N. ROY, *Secretary (offg.).*

Board of Intermediate and Secondary Education, Dacca.

Ramna, the 4th September 1936.

ERRATA.

No. 6401.—In the list of successful candidates at the examinations of the Board of Intermediate and Secondary Education, Dacca, held in April 1936, published in the *Calcutta Gazette*, dated the 9th July 1936 :—

High School Examination.

FIRST DIVISION.

For

32 Dobey, Probabati (M) .. Eden Intermediate College

please read

32 Dobey, Probhabati (M) .. Eden Intermediate College.

SECOND DIVISION.

For

38 Basu, Mritunjay .. 15-8 Pogose School

please read

38 Basu, Mrityunjay .. 15-8 Pogose School ;

for

128 Dobey, Narayanranjan .. 17-3 Armenitola Government High School

please read

128 Dobey, Nayanranjan .. 17-3 Armenitola Government High School ;

for

164 Hemayetuddin Ahmed .. 16-2 Government Moslem High School

please read

164 Hemayetuddin Ahmad .. 16-2 Government Moslem High School ;

for

192 Mukhopadhyay, Durga-prosad. 15-0 Armenitola Government High School

please read

192 Mukhopadhyay, Durga-prasad. 15-0 Armenitola Government High School.

High Madrasa Examination.

FIRST DIVISION.

For

16 Khundkar Muhammad Abdul Mumin. 15-10 Ahmadia Madrasa.

please read

16 Khundkar Muhammad Abdul Munim 15-10 Ahmadia Madrasa.

SECOND DIVISION.

For

145 Muhammad Nurullah .. 17-2 Lakshmipur Madrasa

please read

145 Muhammad Nurullah .. 17-2 Lakshmipur Madrasa ;

for

168 Muhammad Obaidullah Mian 20-11 Bhabta Azizia Madrasa

please read

168 Muhammad Ubaidullah Mian 20-11 Bhabta Azizia Madrasa ;

for

169 Muhammad Osman Ali .. 17-2 Rajshahi Madrasa

please read

169 Muhammad Usman Ali .. 17-2 Rajshahi Madrasa ;

for

192 Quazi Abdul Khaliq .. 15-7 Nuria Madrasa, Barisal

please read

192 Qazi Abdul Khaliq .. 15-7 Nuria Madrasa, Barisal.

THIRD DIVISION.

For

25 Muhammad Abdul Quadir Khan. 20-10 Private

please read

25 Muhammad Abdul Qadir Khan. 20-10 Private ;

for

42 Muhammad Jaffar .. 16-2 Meher Shah Rasti Madrasa

please read

42 Muhammad Jafar .. 16-2 Meher Shah Rasti Madrasa.

Intermediate Examination in Group B (Science).

FIRST DIVISION.

For

12 A. B. Muhammad Serajul Huq Khan Jagannath Intermediate College

please read

12 Abul Bashar Muhammad Serajul Huq Khan. Jagannath Intermediate College ;

for

32 Basu, Sudhiranjan .. Dacca Intermediate College

please read

32 Basu, Suhridranjan .. Dacca Intermediate College.

Intermediate Examination in Group E (Commerce).

FIRST DIVISION.

For

5 Chakrabarti, Asutosh .. Jagannath Intermediate College

please read

5 Chakrabarti, Anutosh . Jagannath Intermediate College.

J. N. ROY, *Secretary (offg.).*

Calcutta University.

NOTICE.

Senate House, the 31st August 1936.

The Senate will proceed in the month of August 1937 to the election of a Tagore Professor of Law for a term of one year, to commence on the 1st August 1938.

The salary of the Professorship is Rs. 9,000 per annum and the Professor will be expected to deliver a course of *not less than twelve lectures* on one of the following subjects:—

(*i*) Moslem Law as administered in British India.

(*ii*) The Law of Partnership with special reference to British India.

(*iii*) Principles and History of Insurance Law with special reference to India.

The salary of the Professor will be paid in twelve *equal monthly instalments*, the first instalment to be paid on the first day of the month following that in which the first lecture is delivered.

Candidates for the Professorship are required *to forward their applications to the Registrar on or before the 1st May 1937*, stating on which of the abovenamed three subjects they are prepared to lecture. Each candidate will forward, with his application, *one hundred copies of a brief synopsis of his proposed lectures* and, if he so pleases, *the same number of copies of his introductory lecture.*

The Professor will, not later than the month of August following his election, forward to the Registrar a complete copy (manuscript or typewritten) of the lectures which he proposes to deliver. The copy will be forthwith referred by the Faculty of Law to a Committee of not more than three persons to be selected for their special competence in this behalf, who will examine the same, and, before the expiry of two months from the date of the submission of the copy by the Professor to the Registrar, report to the Faculty whether the work is complete and ready for the Press. If, upon such report, the Faculty are satisfied that the work is complete, the Professor will commence to deliver his lectures within three months from the date of the resolution of the Faculty and shall complete the delivery thereof in another three months. The copy of the lectures delivered will remain in the custody of the Registrar and shall be sent to the Press, as soon as practicable, after delivery thereof.

If the Professor fails to submit the copy of the lectures, or if the copy submitted be found, on examination, to be incomplete and not ready for the Press, the matter will be referred to the Faculty of Law, upon whose recommendation the Senate may either extend the time or cancel the appointment.

J. CHAKRAVORTY, *Registrar.*

Orders by the Vice-Chancellor and Syndicate of the Calcutta University.

Senate House, the 12th September 1936.

The undermentioned candidates are declared to have passed the D. P. H. Examination, Part I, held in September 1936:—

(Arranged in alphabetical order.)

All-India Institute of Hygiene and Public Health.

Maji, Phanindranath.

Mukhopadhyay, Nandalal.

Thakar Singh Chohan.

Zahiruddin Ahmed.

B. B. DUTT,
Controller of Examinations.

Medical College, Calcutta.

Calcutta, the 11th September 1936.

Dr. Chandra's Scholarship in Materia Medica and Therapeutics.

The above scholarship of the value of Rs. 361-8 will be awarded to the best successful candidates who will be selected at an examination to be held this session in December 1936.

(1) The examination is open to all senior students of the Medical College, Calcutta.

(2) Any *ex*-senior student of the Medical College who may at the time of the examination be studying at any Medical College in India or Europe.

(3) Any graduate or Licentiate in Medicine of whatever standing and however employed who may have obtained either in Europe or in India a medical diploma or degree entitling him to practise Medicine, provided that each graduate or licentiate at some time received a portion of his professional education in the Medical College, Calcutta.

Certificates to the effect that the candidate fulfils the above requirements, together with one of good moral character signed by a person of respectability, should be submitted to the Principal, Medical College, Calcutta, on or before the 10th October 1936.

Candidates are required to write an essay on "The Pharmacological Action of the alkaloids of Rauwolfia Serpentina" and submit the same to the Professor of Pharmacology, Medical College, Calcutta, by the 23rd December 1936.

Personal attendance at the examination is not necessary.

Preference will be given to the candidates whose thesis bears evidence of original investigation on the subject.

T. C. BOYD, LT.-COL., I.M.S.,
Principal, Medical College, Calcutta.

Registered No. C207

The Calcutta Gazette

THURSDAY, SEPTEMBER 17, 1936.

PART II

Advertisements.

Notices

Advertisements, Notices, etc., intended for insertion in this part of the Gazette must be sent to Press before 12 noon on Saturday, and all costs deposited and proofs returned by 4 p.m. on Monday. Manuscripts and postal remittances must be addressed to Superintendent, Government Printing (Publication Branch), Bengal Government Press, Alipore.

For the convenience of advertisers located in Calcutta, arrangements have been made to accept advertisements and prepayment of charges at Sales Office, Ground Floor, Writers' Buildings, Calcutta. The latest time for receipt of advertisements for current week's Gazette has been extended till 4 p.m. on Mondays.

Land Sale Notices.

Notification A.

NOTICE is hereby given under sections 6 and 13, Act XI of 1859, that the undermentioned estates and shares of estates in the district of Rangpur, will be put up for sale at the office of the Collector of that district on the 25th September 1936, at 11 a.m., for arrears of revenue (and other demands which by law are realisable as arrears of land revenue).

When in columns 5, 7 and 9 of the following statement it is stated that only a share is to be sold, it is to be understood that a separate account is kept for that share :—

Tauzi No	Name of mahal and pargana	Sadar jama of whole estate.	Whether the whole estate is to be sold	If only a share is to be sold, specification of such share or shares	Names of proprietors of property to be sold.	If only a share is to be sold, the sadar jama of such share	If the whole estate is to be sold, the arrears due from it.	If only a share is to be sold, the arrears due from it.
1	2	3	4	5	6	7	8	9
		Rs. a. p.				Rs. a. p.		Rs. a. p.
224-Res.	Batasan O'Gayraha Batasan	42,121 7 7	No ..	16 annas share of mauza Abhirampur Gayraha, Groups A and B. 8 annas share of mauza Abhirampur Gayraha, Groups C, D and E All other shares besides that specified will be excluded from the sale.	Srimat Banwari Mukunda Das Nandi (Deb), subait of Kishori Banawariji Thakur and others	30,232 6 2	.	446 3 0

This notice is issued in respect of instalments of revenue due on or before the 31st Jaistha, 1343 B.S., of which the latest date of payment was 29th June 1936, A.D.

Rangpur, the 28th August 1936. [ILLEGIBLE], *for* Collector.

Notification A.

NOTICE is hereby given under sections 6 and 13, Act XI of 1859, that the undermentioned estates and shares of estates in the district of Rangpur will be put up for sale at the office of the Collector of that district on the 25th September 1936, at 11 a.m., for arrears of revenue (and other demands which by law are realisable as arrears of land revenue).

When in columns 5, 7 and 9 of the following statement it is stated that only a share is to be sold, it is to be understood that a separate account is kept for that share :—

Tauzi No.	Name of mahal and pargana.	Sadar jama of whole estate.	Whether the whole estate is to be sold	If only a share is to be sold, specification of such share of shares.	Names of proprietors of property to be sold.	If only a share is to be sold, the sadar jama of such share.	If the whole estate is to be sold, the arrears due from it.	If only a share is to be sold, the arrears due from it
1	2	3	4	5	6	7	8	9
		Rs. a. p.				Rs. a. p.	Rs. a. p.	Rs. a. p.
42/1	Kazirhat, hisya 4 annas, Chakle Kazirhat.	10,435 6 4	No ..	1 a. 4 p. share of mauza Bogulagari Gayraha, groups A to D, F and G.	Srimanta Narayan Sarker and others.	869 9 8	..	18 11 11
42/5	Ditto ..	10,435 6 4	No ..	8 p. share of the estate . All other shares besides that specified will be excluded from the sale.	Mahatab Uddin Choudhury.	434 13 0	..	48 10 3
47/1	Goragram O'Gayraha, Kazirhat.	4,622 11 5	No ..	1 a. 18 g. 3 c. 1 kg. 3 t. 6⅔ bahar share of the estate	Mon Mohini Choudhurani and others.	560 11 10	..	58 2 2
47/4	Ditto ..	4,622 11 5	No ..	1 a. 18 g. 3 c. 1 kg. 3 t. 6⅔ bahar share of the estate. All other shares besides that specified will be excluded from the sale.	Bireswar Chatterjee, guardian of Annada Mohan Das and another.	560 13 4	..	58 5 9
48	Joychandi O'Gayraha, Chakle Kazirhat.	1,544 10 5	Whole	....	Ramani Mohan Choudhury.	..	160 1 10	..
50/1	Ketkibari, Chakle Kazirhat.	1,544 5 8	No ..	6 as 2 g. 3 c. share of the estate. All other shares besides that specified will be excluded from the sale.	Munshi Amiruddin Ahmed and others.	596 0 4	..	290 8 7
56-Res.	Matukpur O'Gayraha, Kazirhat.	778 11 0	No ..	16 annas share of mauza Charaikhola, group A. 6 a 11 g. 2 c. share of mauza Matukpur, group B. All other shares besides that specified will be excluded from the sale.	Indu Mohan Goswami and others	557 10 3	..	58 13 5
73/5	Haroa O'Gayraha, hisya 7 annas, Chakle Khairhat, Tetepur, pargana Kundi.	3,922 13 3	No ..	16 annas share of mauza Harirampur Gayraha, group A. All other shares besides that specified will be excluded from the sale.	Ramani Mohan Choudhury	2,580 3 3	..	270 2 9
91/1	Paikan, Mouza, Kunda, Kazirhat	563 10 0	No ..	16 annas share of mauza Paikan, group B. All other shares besides that specified will be excluded from the sale.	Kshirod Behari Saha Choudhuri and others.	506 6 3	..	53 1 6
98	Bisandai O'Gayraha, Kazirhat.	1,442 15 10	Whole	....	Jatindra Mohan Roy Choudhury and others.	..	49 11 1	..
99	Bahalipara, hisya 10 annas, Kazirhat	570 0 0	Do. ..	....	Mihir Kumar Lahiri and others.	..	60 2 1	..
109	Kadikol O'Gayraha, motalak Lat Choronga, hisya 6 as 7 g. 1 c. 7 dt., Chakle Kazirhat	607 1 11	Do. ..	....	Rakhal Chandra Choudhuri	..	59 9 11	..
119	Charaikhola, Kazirhat.	2,686 14 11	Do. ..	....	Raj Mrityunjoy Roy Choudhury Bahadur	..	277 5 5	—
120-Res.	Kuchiamar O'Gayraha, Chakle Kazirhat.	1,003 12 3	No ..	16 annas share of mauza Bahalipara, group A. 9 as. 5 g. 1 c. 1 kg. 12 t share of mauza Bahalipara, group B. All other shares besides that specified will be excluded from the sale.	Kumud Kumar Lahiri and others	656 12 2	..	62 7 7

Tauzi No.	Name of mahal and pargana.	Sadar jama of whole estate.	Whether the whole estate is to be sold.	If only a share is to be sold, specification of such share of shares.	Names of proprietors of property to be sold.	If only a share is to be sold, the sadar jama of such share.	If the whole estate is to be sold, the arrears due from it.	If only a share is to be sold, the arrears due from it.
1	2	3	4	5	6	7	8	9
		Rs. a. p.				Rs. a. p.	Rs. a. p.	Rs. a. p.
131/1	Desibal Kathali, Kazirhat.	3,158 10 10	No ..	8annas share of the estate. All other shares besides that specified will be excluded from the sale.	Md. Jasimuddin Choudhury and others.	1,579 5 5	..	162 12 9
147-Res.	Sakhati O'Gayraha, Kazirhat.	2,163 0 1	No ..	10as. 8p. share of the estate. All other shares besides that specified will be excluded from the sale.	Jatindra Mohan Roy Choudhury and others.	1,442 0 1	..	75 5 5
170	Panbari O'Gayraha, Kundi.	623 9 2	Whole	....	Mritunjay Roy Choudhury and others, sebait of Syama Sundari Thakurani.	..	32 11 2	..
232-Res.	Gopal Chak O'Gayraha, Sarhatta.	1,402 4 11	No ..	5as. 6g. 2c. 2kt. share of mauza Chengmari, group B. 2as. 5g. 1c. 2kt. 1dt. 1½ job share of mauza Chengmari, group C. 5as. 6g. 3c. 1kt. 2dt. share of mauza Chengmari, group D.	Kalikadas Bandopadhyay and others.	155 11 7	..	12 3 6
232/1	Ditto ..	1,402 4 11	No ..	16 annas share of mauza Chengmari, group A. 10as. 1g. 1c. 2kt. 2dt. 1 job share of mauza Chengmari, group C. 10as. 1g. 1c. 1kt. share of mauza Chengmari, group D.	Indumati Debya and others.	934 14 0	..	74 6 9
232/7	Ditto ..	1,402 4 11	No ..	5as. 6g. 2c. 2kt. share of mauza Ekdala, group B. 1a. 15g. 2c. 2dt. share of mauza Ekdala, group E. All other shares besides that specified will be excluded from the sale.	Shibani Debi, guardian of Karuna Kanta Roy and others.	155 13 0	..	12 6 5
241	Laskarpur O'Gayraha, hisya 9as. 6g. 1c. 1kt., Barabilla.	549 10 1	Whole	....	Priya Nath Roy and others.	..	22 14 1	..
248	Mithipur O'Gayraha, Barabila.	4,407 0 0	Do. ..	....	Jatindra Mohan Roy Choudhury and others.	..	100 1 10	..
318-Res.	Sangsat, Kazirhat	1,207 3 0	No ..	8 annas share of the estate.	Brindaban Chandra Roy and others.	513 9 6		115 1 9
318/1	Ditto ..	1,207 3 0	No ..	8 annas share of the estate. All other shares besides that specified will be excluded from the sale.	Subasini Majumder and others.	513 9 6	..	115 1 8
653	Osmanpur O'Gayraha, hisya 3as. 8p., Barabilla.	2,934 5 6	Whole	....	Kalipada Chakravorty.	..	184 5 3	..
654/4	Ramchandrapur O'Gayraha, Balriaskhpala.	2,371 12 11	No ..	4as. 14g. 1 1/12c. share of the estate. All other shares besides that specified will be excluded from the sale.	Bireswar Chatterjee, Common Manager.	698 13 3	..	516 1 8
693/5	Babanpur, Babanpur.	5,289 1 0	No ..	3as. 14g. 3c. 1kt. 2½dt. share of the estate. All other shares besides that specified will be excluded from he sale.	Ditto	1,237 5 3	..	1,266 7 9
721	Laibari kismat pargana, hisya 4 annas, Laibari.	1,009 11 3	Whole	....	Md. Esarat Ullah Choudhury, Motwali of Esaratullah Wakf Estate and others.	..	49 11 2	..
790	Satyendra Nath Khan, Kazirhat.	529 7 5	Do. ..	....	Satyendra Nath Khan.	..	55 0 7	..

This notice is issued in respect of instalments of revenue due on or before the 31st Jaistha, 1343 B. S., of which the latest date of payment was 29th June 1936 A. D.

Rangpur, the 31st August 1936.

A. C. ALLISON, *for* Collector.

Notification A.

NOTICE is hereby given under sections 6 and 13, Act XI of 1859, that the undermentioned estates and shares of estates in the district of Bakarganj will be put for sale at the office of the Collector of that district on the 24th September 1936, at 12 noon, for arrears of revenue and other demands which by law are realizable as arrears of land revenue.

When in columns 5, 7 and 9 of the following statement it is stated that only a share is to be sold, it is to be understood that a separate account is kept for that share :—

Tauzi No.	Name of mahal and pargana.	Sadar jama of whole estate.	Whether the whole estate is to be sold.	If only a share is to be sold, specification of such share or shares.	Names of proprietors of property to be sold.	If only a share is to be sold, the sadar jama of such share.	If the whole estate is to be sold, the arrears due from it.	If only a share is to be sold, the arrears due from it.
1	2	3	4	5	6	7	8	9
		Rs. a. p.				Rs. a. p.	Rs. a. p.	Rs. a. p.
1408	Taluk Abu Mohammad, pargana Bozorgomedpur.	2,065 4 1	..	4 annas share covered by S. A. No. 7.	Uma Kanta Das and others.	741 5 0	..	405 5 0
1436	Taluk Baidyanath Singha pargana Bozorgomedpur.	3,003 0 0	Whole ..	....	Narayan Das Chatterjee.	..	711 9 7	..
1459	Taluk Fateh Chand, pargana Bozorgomedpur.	3,150 8 7	..	Residuary share—7 as. 10g.	Bipin Behari Bose.	1,476 13 2	..	759 12 7
				2as. 16g. 2cr. 2kt. share covered by S. A. No. 1.	Ditto ..	557 14 5	..	287 1 4
				5as. 13g. 1cr. 1kt. share covered by S. A. No. 2 will sold.	Ditto ..	1,115 13 0	..	574 1 0
1482	Taluk Haranath Ghosal, pargana Bozorgomedpur.	4,035 14 6	Whole ..	....	Bomkesh Chatterjee and others.	..	1,262 6 9	..
1510	Mahal Kali Das Ghattak, pargana Bozorgomedpur.	694 5 0	Do. ..	....	Mathura Mohan Das and others.	..	142 0 9	..
1565	Taluk Nabakishore and Brojokishore Datta and others, pargana Bozorgomedpur.	2,956 4 10	Do ..	....	Satya Santi Mitra and others.	..	1,684 11 4	..
1599	Taluk Rajkishore Rakhit, pargana Bozorgomedpur.	2,138 13 5	..	Residuary share—11 annas will be sold.	Karuna Kanta Ghose and others.	1,470 7 2	..	454 2 11
				All other shares than that specified will be excluded from sale				
1634	Taluk Ram Ratan Gun and Ram Shunder Gun, pargana Bozorgomedpur.	542 11 7	Whole ..	....	Kumar Satya Mohan Ghosal Bahadur and others.	..	154 4 3	..
1671	Taluk Surjyanarayan Sen, pargana Bozorgomedpur.	1,158 8 2	Do. ..	....	Ditto ..	..	299 4 0	..
1677	Taluk Syeduddin Khan and others, pargana Bozorgomedpur.	895 13 6	Do. ..	....	Satya Santi Mitra and others.	..	617 6 5	..
1728	Zamindary share 1a. 17g. 1cr. 2kt., pargana Chandradwip.	9,617 1 0	Do. ..	....	Nanakdehi Barmani, guardian for Monoranjan Prosad Barman.	..	3,274 2 4	..
1740	Taluk Khajanur, share 5as. 2g. 2cr. pargana Chandradwip	1,544 0 0	..	Residuary share 13 as. 2g. 1cr. will be sold.	Maulvi Sadaruddin Ahmad and others.	1,265 6 0	..	555 10 0
				All other shares than that specified will be excluded from sale.				
1746	Taluk Mohammad Hyat, pargana Chandradwip.	7,062 5 8	..	Residuary share 5as. 2g. will be sold.	Basanta Kumar Guha and others.	2,251 9 4	..	466 12 0
				All other shares than that specified will be excluded from sale.				

Tauzi No.	Name of mahal and pargana.	Sadar jama of whole estate.	Whether the whole estate is to be sold.	If only a share is to be sold, specification of such share or shares.	Names of proprietors of property to be sold.	If only a share is to be sold, the sadar jama of such share.	If the whole estate is to be sold, the arrears due from it.	If only a share is to be sold, the arrears due from it.
1	2	3	4	5	6	7	8	9
		Rs. a. p.				Rs. a. p.	Rs. a. p.	Rs. a. p.
1752	Taluk Raj Ballabh Chakraverty, pargana Chandradwip.	8,208 9 0	..	Residuary share 3as. 6g. 3cr. 2kt. 1dt.	Dinesh Chandra Chatterjee and others.	689 13 0	.	1,397 6 4
				2as. 14g. 2kt. share covered by S. A. No. 3.	Sarat Chandra Ghose, Common Manager.	558 5 0	..	1,126 1 7
1762	Taluk Shibchandra Das, pargana Chandradwip	6,013 1 10	..	Residuary share 2as. 4g. 1cr. 1 kt. 15 dl.	Binoy Krishna Mukherjee and others.	833 12 10	..	94 0 0
2069	Mehal Kalmir Char, pargana Taraf Kulmir Char.	1,846 10 8	..	Residuary share 14as. 5g.	Mohammad Nural Huda Munshi and others.	1,644 10 8	..	823 14 0
2708	Zamindary share 1 a. 10g., pargana Utter Sahabajpur.	1,494 6 5	Whole ..	....	Rajkumari Debi	..	576 0 0	..
2749	Taluk Durgagangeswar, pargana Utter Sahabajpur.	1,037 13 2	..	8 annas share covered by S. A. No. 1.	Provat Chandra Roy and others.	518 13 8	..	54 6 4
3029	Taluk Sriram Sen, pargana Utter Sahalmajpur.	784 12 11	Whole ..	....	Dwaraka Natha Sirkar.	..	196 3 4	..
3256	Zamindary share 2 annas, pargana Ratandi Kalikapur.	3,151 6 9	..	Residuary share 13 as 6 g. 2 cr. 2 kt.	Abdul Kader Choudhuri.	2,628 11 0	..	1,270 13 6
				2 as. 13 g. 1 cr. 1 kt. covered by S. A. No. 1 will be sold.	Biroja Sundari Choudhurani.	525 11 9	..	63 0 5
3257	Zamindary share 4 annas, pargana Ratandi kalikapur.	6,308 12 0	..	18g. 3cr. share covered by S. A. No. 5.	Taraprosanna Guha and others.	1,084 5 4	..	58 5 0
				10 g. 2½ cr. share covered by S. A. No. 6 will be sold.	Abdul Kader Choudhuri.	837 14 6	..	90 2 0
				All other shares than that specified will be excluded from sale.				
3258	Zamindary share 1annas, pargana Ratandi kalikapur.	6,308 12 0	..	9 g. 2 cr. 2 kt. share covered by S. A. No. 5	Taraprosanna Guha and others.	722 13 9	..	44 15 2
				15g. 3cr. 2½ kt. share covered by S. A. No. 6.	Abdul Kader Choudhury.	1,256 12 10	..	156 6 3
				14 g. ½ kt. share covered by S. A No. 7	Abdul Gafur Choudhury.	1,108 15 3	..	138 0 3
3266	Zamindary share 3annas, pargana Sehajadpur.	857 13 4	Whole ..	....	Kali Kumar Gangooli, Common Manager.	..	79 14 6	..
3841	Zamindary share 2as 17g. 3cr., pargana Selimabad.	17,976 2 6	..	Residuary share 5as. 6g. 2cr. 2kt will be sold.	Kumar Satya Mohan Ghosal Bahadur and others.	5,909 0 11	..	1,988 14 0
				All other shares than that specified will be excluded from sale.				
3843	Zamindary share 13 gandas, pargana Selimabad.	3,503 6 8	..	8 annas share covered by S. A. No. 1 will be sold.	Haran Chandra Sen (Pleader), Receiver.	1,706 11 4	..	860 4 7
				All other shares than that specified will be excluded from sale.				
3854	Zamindary share 10 as. 4 g., pargana Selimabad.	3,280 11 4	Whole ..	....	Indubhusan Das Gupta and others.	..	451 12 4	..
539	Rangabati Abad, pargana Chandradwip.	19,068 0 0	Do. ..	....	Asutosh Roy Choudhury and others, Trustees.	..	14,068 0 0	..

Tauzi No	Name of mahal and pargana.	Sadar jama of whole estate.	Whether the whole estate is to be sold.	If only a share is to be sold, specification of such share or shares.	Names of proprietors of property to be sold	If only a share is to be sold, the sadar jama of such share.	If the whole estate is to be sold, the arrears due from it.	If only a share is to be sold, the arrears due from it.
1	2	3	4	5	6	7	8	9
		Rs. a. p.				Rs. a. p.	Rs. a. p.	Rs. a. p.
4551	Kismat Kewabunia, pargana Aurangpur.	1,320 1 3	Whole ..	....	Satya Santi Mitra and others.	..	1,120 1 3	..
4556	Bara Bighai Abad Osat Taluk Jagadambha, pargana Aurangpur.	1,478 0 10	Do. ..	...	Ditto ..	..	1,248 0 10	..
4575	Char Baraikaran, pargana Selimabad.	541 0 0	Do. ..	....	Kumar Satya Mohan Ghosal Bahadur and others.	..	141 0 0	..
4605	Char Samajdi Baligaun, pargana Saistanagore.	2,197 0 0	Do. ..	....	Satish Chandra Das and others.	..	131 5 4	..
4624	Jhanjhania Namajpur, pargana Selimabad.	609 0 0	Do. ..	...	Saroj Kumar Bose and others, Common Manager.	..	359 0 0	..
4625	Dari Char Gazipur, pargana Selimabad.	2,357 0 0	Do. .	....	K. S. Banerjee, Official Receiver.	..	357 0 0	..
4784	Char Sachilapur Kistakati, pargana Selimabad.	996 0 0	Do.	....	Kumar Satyamohan Bahadur and others.	..	196 0 0	..
4933	New Char Khajuria, pargana Chandradwip.	3,773 0 0	Do. ..	...	Dilip Kumar Roy Choudhury and others.	..	2,515 0 0	..
5202	Char Udyapur, pargana Jazira.	1,416 0 0	....	Residuary share 8 annas will be sold. All other shares than that specified will be excluded from sale.	Tara Prosanna Guha.	708 0 0	..	22 8 0
5209	Mauza Shibpur in Taluk Ramdob Datta, pargana Gopalpur Mirzanagore.	1,751 0 0	Whole ..	....	Ditto ..	..	284 0 0	..
5210	Mauza Mahadebpur in Taluk Ramdob Datta, pargana Gopalpur Mirzanagore.	760 0 0	Do. ..	....	Ditto ..	..	24 0 0	..
5234	Char Padma, pargana Dakhin Sahabajpur.	5,357 0 0	Do. ..	....	Sushil Kumar Roy Choudhury and others.	..	3,357 0 0	..
5285	Char Joynagore, pargana Utter Sahabajpur.	29,123 11 0	The 16 annas interest of the temporary proprietary and farming settlement of the entire estate will be sold for the unexpired portion of the period of 15 years from 1st April 1929 to 31st March 1944 for which period temporary proprietary and farming settlement of the entire estate was made with the 4 annas proprietor of the estate Babu Saradindu Mukherjee.	The 4 annas proprietary right of Babu Saradindu Mukherjee in the estate will be sold. The proprietary right in the remaining 12 annas share, the owners of which refused settlement at the last revisional settlement and are receiving a malikana of Rs. 1,875 annually from Government, will not be sold but the purchaser of the 4 annas share will be entitled to the farming settlement for the remainder of the term of settlement. At the resettlement of the estate on the expiry of the current settlement the right of the said 12 annas proprietors to get settlement will remain intact.	1. Probhabati Debi—4 annas share. 2. Sukhendra Nath Ghose, Administrator to the estate of Surath Kumari—8 annas share. 3. Babu Saradindu Mukherjee—4 annas share. The temporary proprietary and farming settlement holder of the entire estate being the said Babu Saradindu Mukherjee, the owner of the 4 annas proprietary right as mentioned above.	..	42,068 2 9	.
6080	Taluk Howla Ananta Ram Nag, Kismat Nyamati, pargana Bozorgomedpur.	729 15 9	Whole	. .	Abinash Chandra Banerjee, Trustee.	..	[illegible] 15 [illegible]	..

Tauzi No.	Name of mahal and pargana.	Sadar jama of whole estate.	Whether the whole estate is to be sold.	If only a share is to be sold, specification of such share or shares.	Names of proprietors of property to be sold.	If only a share is to be sold, the sadar jama of such share.	If the whole estate is to be sold, the arrears due from it.	If only a share is to be sold, the arrears due from it.
1	2	3	4	5	6	7	8	9
		Rs. a. p.				Rs. a. p.	Rs. a. p.	Rs. a. p.
6331	Char Madhab Roy, etc., S. A. to Bidyanandapur, pargana Salstabad.	874 0 0	Whole ..	....	Nawabjada Syed Fazle Rabbi Choudhuri Motwalli.	..	437 0 0	..
6410	S. A. to mauza Sakuchia, pargana Abdullapur.	1,042 0 0	Do. ..	....	Tahera Khatoon Choudhurani.	..	307 3 0	..
6457	Zamindary Srikanta Roy Choudhuri, pargana Aurangpur.	1,195 10 0	Do. ..	....	Umesh Chandra Banerjee and others.	..	295 8 9	..
6459	Zamindary Kallprosad Roy Choudhury, pargana Aurangpur.	580 0 0	Do. ..	....	Brojo Kanta Roy Choudhury.	..	72 3 0	..
6462	Zamindary Kaidas Roy Choudhury, pargana Aurangpur.	894 1 0	Do. ..	....	Ajita Sundari Debya	..	110 12 0	..
6474	S. A. to Estate Nos. 1730 and 1745, mauzas Kalir Char and Shibar Char, pargana Chandradwip.	9,454 0 0	Do. ..	....	Sourindra Nath Mitra and others, Joint Receivers.	..	30,778 15 11	..
6571	S. A. to Bagura Abkanda 1st part, pargana Chandradwip.	857 0 0	Do. ..	....	Ramani Mohan Roy Choudhury and others.	..	208 8 0	..
6672	S. A. to mauza Bantari, pargana Sellmabad.	9,156 0 0	Do. ..	....	Saroj Kumar Bose, Common Manager.	..	600 0 0	..
6674	S. A. to Raghunathpur, pargana Sellmabad.	1,688 0 0	Do. ..	....	Ditto	..	900 0 0	..
6734	S. A. to Shibar Char, pargana Chandradwip.	2,126 0 0	Do. ..	....	Satya Santi Mitra and others.	..	6,384 0 0	..
6736	S. A. to Panchkhali and Kalir Char, pargana Chandradwip.	1,288 0 0	Do. ..	....	Ditto ..	..	2,275 8 10	..
6751	Taluk Naranarayan Ghose, pargana Balarampur Sujabad.	1,529 0 3	....	12 annas share covered by S. A. No. 1 will be sold. All other shares than that specified will be excluded from sale.	Sananda Chandra Shaha Choudhury.	1,146 12 0	..	114 6 0
6759	S. A. to Char Kalmi Ar Kalmi, pargana Taraf Kalmi.	5,116 0 0	Whole ..	....	Saurindra Nath Mitra and others, Joint Receivers.	..	12,076 7 9	..
7063	Taluk Mohammad Yusuf, pargana Bozorgomedpur.	563 12 0	Do. ..	....	Mohammad Yusuf	..	8 8 6	..

The above estates are being advertised for sale for the instalments of revenue which were due on or before the 31st Jaistha, 1343 B.S., the latest date of payment of which was 28th June 1936.

Barisal, the 31st August 1936.

[ILLEGIBLE], *for* Collector.

Notification A.

NOTICE is hereby given under sections 6 and 13, Act XI V of 1859, that the undermentioned estates and shares of estates in the district of Bakarganj will be put up for sale at the office of the Collector of that district on the 24th September 1936 at 12 noon for arrears of revenue and other demands which by law are realizable as arrears of land revenue :—

Touzi No.	Name of mahal and pargana	Sadar jama of whole estate.	Whether the whole estate is to be sold.	If only a share is to be sold, specification of such share or shares.	Names of proprietors of property to be sold.	If only a share is to be sold, the sadar jama of such share.	If the whole estate is to be sold, the arrears due from it.	If only a share is to be sold, the arrears due from it.
1	2	3	4	5	6	7	8	9
		Rs. a. p				Rs a p.	Rs. a. p.	Rs. a. p.
4526	Houla No. 1 in Karaibaria, pargana Sundarbans.	4,525 0 0	Whole	....	Girindra Mohan Ghose.	..	1,539 13 11	..
4532	Houla No. 55 in Abad Debpur, pargana Sundarbans.	1,108 13 0	Do. ..	....	Abdul Latif Houladar and others.	..	1,633 13 0	..
4536	Houla No. 432 in Abad Taktabunia, pargana Sundarbans.	615 0 0	Do. ..	....	Sukumar Sen and others.	..	1,159 15 0	..
4538	Houla No. 524 in Abad Taktabunia, pargana Sundarbans.	669 9 0	Do. ..	....	Ditto ..	..	1,265 8 0	..
4538	Houla No. 644 in Abad Taktabunia, pargana Sundarbans	501 0 0	Do. ..	....	Ditto ..	..	1,002 0 0	..
4548	Houla No. 6 in Abad Krishnapura, pargana Sundarbans.	562 12 0	Do. ..	....	Manindra Nath Chakrabarty, Executor.	..	276 1 7	..
4573	Houla No. 162 in Chak Kalamogha, mauza Char Duanal, pargana Sundarbans	762 8 0	Do. ..	....	Subodh Chandra Mitra and others.	..	610 0 0	..
4581	Petao Taluk No. 213 in Chhota Baliatali, pargana Sundarbans.	977 15 0	Do. ..	....	Rash Behari Ghose	..	977 15 0	..
4583	Houla No. 333 in Dhulashar, pargana Sundarbans	1,252 13 0	Do. ..	....	Nehaluddin Houlader and others.	..	210 13 0	..
4643	Taluk No. 2 in Bazarghona, pargana Sundarbans.	7,611 0 0	Do. ..	....	Hem Kanta Sen Ray Chaudhury.	..	5,411 0 0	..
4645	Sikimi Taluk No. 2 in Patukhali, pargana Sundarbans.	4,575 0 0	Do. ..	....	Ranajit Ray Chaudhury.	..	3,575 0 0	..
4657	Jote No. 35 in Char Badna, pargana Jazira.	805 10 0	Do. ..	....	Abdul Hamid Chaudhury.	..	505 10 0	..
4791	Abadkari Jote No 101 in Char Nepattashi, pargana Jazira.	876 0 0	Do. ..	....	Abdul Gafur and others.	..	876 0 0	..
4791	Abadkari Jote No. 263 in Char Nepattashi, pargana Jazira	777 14 0	Do. ..	....	Radhika Prosad Sarkar and others.	..	777 14 0	..
4798	Nimhoula No. 55 in Char Algi, pargana Ratandi Kalikapur.	567 0 0	Do. ..	....	Sekander Mean	..	567 0 0	..
4798	Nimhoula No. 169 in Char Algi, pargana Ratandi Kalikapur.	731 10 0	Do. ..	....	Ditto ..	..	381 10 0	..
5107	Houla No. 418 in Chak Dhalua, mauza Dhalua, pargana Sundarbans.	1,785 7 0	Do. ..	....	Khirode Lal Kunda and others.	..	685 7 0	..
5007	Houla No. 154 in Chak Dhalua, mauza Nali, pargana Sundarbans.	556 14 0	Do. ..	....	Prosanna Kumar Das and others.	.	239 5 8	..
5007	Houla No. 54 in Chak Dhalua, mauza Charakgachia, pargana Sundarbans	645 1 0	Do. ..	....	Fetaruddi and others.	..	312 9 3	..
5007	Houla No. 197 in Chak Dhalua, mauza Charakgachia, pargana Sundarbans.	692 12 0	Do. ..	....	Asimoddi and others	..	332 5 1	..
5007	Houla No. 253 in Chak Dhalua, mauza Charakgachia, pargana Sundarbans.	673 14 0	Do. ..	....	Abdul Koddus and others.	..	388 0 11	..
5007	Houla No. 357 in Chak Dhalua, mauza Charakgachia, pargana Sundarbans	619 6 0	Do. .	....	Abi Abdulla and others.	..	319 6 0	..

Tauzi No.	Name of mahal and pargana.	Sadar jama of whole estate.	Whether the whole estate is to be sold.	If only a share is to be sold, specification of such share or shares.	Names of proprietors of property to be sold.	If only a share is to be sold, the sadar jama of such share.	If the whole estate is to be sold, the arrears due from it.	If only a share is to be sold, the arrears due from it.
1	2	3	4	5	6	7	8	9
		Rs. a. p.				Rs. a. p.	Rs. a. p.	Rs. a. p.
5007	Houla No. 716 in Chak Dhalua, mauza Charbankgachia, pargana Sundarbans	568 0 0	Whole	....	Nabin Chandra Chakrabarty.	..	318 0 0	.
5007	Houla No. 748 in Chak Dhalua, mauza Charbankgachia, pargana Sundarbans.	508 14 0	Do. ..	....	Manoranjan Chakrabarty.	..	233 14 0	..
5007	Jote No. 763 in Chak Dhalua, mauza Charbankgachia, pargana Sundarbans	545 10 0	Do. ..	. ..	Billatali and others.	.	280 10 0	..
5007	Jote No. 782 in Chak Dhalua, mauza Charbankgachia, pargana Sundarbans.	594 3 0	Do. ..	....	Haji Bhaloo and others.	..	284 3 0	..
5007	Jote No. 224 in Chak Dhalua, mauza Charbankgachia, pargana Sundarbans.	552 15 0	Do. ..	...	Abdul Kader and others.	.	276 7 6	..
5008	Houla No 46 in Chak Bargana, mauza Bargana, pargana Sundarbans.	1,266 4 0	Do.	....	Ahiuddi and others.	..	632 8 0	..
5008	Houla No. 344 in Chak Bargana, mauza Bargana, pargana Sundarbans.	1,088 10 0	Do. ..	. .	Gaganali and others	..	936 4 0	..
5008	Houla No. 551 in Chak Bargana, mauza Bargana, pargana Sundarbans.	1,282 14 0	Do. ..	..	Rajani Kanta Gope and others.	..	223 14 0	..
5008	Houla No. 603 in Chak Bargana, mauza Bargana, pargana Sundarbans.	508 6 0	Do. ..	....	Sa ada Charan Sarkar.	..	406 12 0	..
5008	Houla No. 742 in Chak Bargana, mauza Bargana, pargana Sundarbans.	681 2 0	Do. ..	....	Srijanali and others	..	100 0 0	..
5008	Houla No. 30 in Chak Bargana, mauza Kroke, pargana Sundarbans	1,041 14 0	Do. ..	....	Hazrat Ali Mean ..	..	511 14 0	..
5008	Houla No. 85 in Chak Bargana, mauza Kroke, pargana Sundarbans.	1,148 15 0	Do. ..	....	Nakulowar Kapali and others.	..	1,287 11 0	..
5008	Houla No. 224 in Chak Bargana, mauza Kroke, pargana Sundarbans.	1,773 11 0	Do. ..	.. .	Mohamdd and others	..	882 6 0	..
5008	Houla No 65 in Chak Bargana, mauza Hollbunia, pargana Sundarbans.	597 2 0	Do. ..	....	Adamali and others	..	284 4 0	.
5008	Houla No. 99 in Chak Bargana, mauza Hollbunia, pargana Sundarbans.	600 8 0	Do. ..	....	Ditto ..	..	600 8 0	..
5008	Houla No. 296 in Chak Bargana, mauza Hollbunia, pargana Sundarbans.	674 2 0	Do. .	. .	Gaganand others ..	.	316 1 8	..
5008	Houla No 333 in Chak Bargana, mauza Hollbunia, pargana Sundarbans.	520 15 0	Do. ..	....	Ditto ..	..	500 15 0	..
5008	Houla No. 365 in Chak Bargana, mauza Hollbunia, pargana Sundarbans.	595 0 0	Do. ..	....	Ditto ..	..	282 2 8	..
5008	Houla No. 404 in Chak Bargana, mauza Hollbunia, pargana Sundarbans.	793 7 0	Do. ..	....	Azaharuddin Ahmed	..	656 14 0	..
5008	Houla No. 517 in Chak Bargana, mauza Hollbunia, pargana Sundarbans	552 15 0	Do. ..	....	Dwarika Nath Sen and others.	..	247 15 0	..
5008	Houla No. 565 in Chak Bargana, mauza Hollbunia, pargana Sundarbans.	582 4 0	Do. ..	. . .	Prosanna Kumar Das and others.	..	269 12 0	..
5008	Houla No. 745 in Chak Bargana, mauza Hollbunia, pargana Sundarbans.	767 7 0	Do. ..	. . .	Mohini Mohan Das	..	767 7 0	..

Tauzi No.	Name of mahal and pargana.	Sadar jama of whole estate.	Whether the whole estate is to be sold.	If only a share is to be sold, specification of such share or shares.	Names of proprietors of property to be sold.	If only a share is to be sold, the sadar jama of such share.	If the whole estate is to be sold, the arrears due from it.	If only a share is to be sold, the arrears due from it.
1	2	3	4	5	6	7	8	9
		Rs. a. p.				Rs. a. p.	Rs. a. p.	Rs. a. p.
5008	Houla No. 920 in Chak Barguna, mauza Helibania, pargana Sundarbans.	837 15 0	Whole	..	Raimohan Chaudhury and others.	..	287 15 0	..
5008	Houla No. 4 in Chak Barguna, mauza Maitha, pargana Sundarbans.	1,029 6 0	Do. ..	....	Abani Mohan Chatterjee and others.	..	504 6 0	..
5008	Houla No. 55 in Chak Barguna, mauza Maitha, pargana Sundarbans.	2,815 15 0	Do. ..	....	Akhoy Kumar Shaha and others.	..	1,907 15 6	..
5008	Houla No. 135 in Chak Barguna, mauza Maitha, pargana Sundarbans.	511 11 0	Do. ..	....	Abdul Latif and others.	..	256 11 0	..
5008	Houla No. 178 in Chak Barguna, mauza Maitha, pargana Sundarbans.	580 14 0	Do. ..	....	Mahammad and others.	..	200 14 0	..
5008	Houla No. 227 in Chak Barguna mauza Maitha, pargana Sundarbans.	1,040 10 0	Do. ..	....	Dakhina Ranjan Gope.	..	471 4 0	..
5008	Houla No. 307 in Chak Barguna, mauza Maitha, pargana Sundarbans.	606 12 0	Do. ..	....	Mohini Mohan Das	..	453 1 9	..
5008	Houla No. 534 in Chak Barguna, mauza Maitha, pargana Sundarbans.	1,040 10 0	Do. ..	....	Tozambar Ali ..	..	456 4 0	..
5008	Houla No. 667 in Chak Barguna, mauza Maitha, pargana Sundarbans.	593 3 0	Do. ..	....	Raimohan Chaudhury and others.	..	203 2 0	..
5008	Houla No. 491 in Chak Barguna, mauza Rakhachandi, pargana Sundarbans.	628 13 0	Do. ..	....	Hasanuddi and others.	..	206 6 5	..
5008	Houla No. 545 in Chak Barguna, mauza Rakhachandi, pargana Sundarbans.	697 14 0	Do. ..	....	Sashi Kumar Das and others.	..	353 12 0	..
5008	Houla No. 41/68 in Chak Barguna, mauza Ballatali, pargana Sundarbans.	597 10 0	Do. ..	....	Afseruddi and others.	..	356 1 9	..
5008	Houla No 80 in Chak Barguna, mauza Ballatali, pargana Sundarbans.	649 18 0	Do. ..	....	Dhalai and others	..	394 10 0	..
5215	Houla No. 349 in Madhupura, pargana Jazira.	1,086 0 0	Do. ..	....	Chand Bibi and others.	..	597 0 0	..
5215	Houla No. 607 in Madhupura, pargana Jazira.	1,078 4 0	Do. ..	....	Haran Chandra Das	..	1,078 4 0	..
5216	Houla No. 1460 in Char Baitagia, pargana Jazira.	2,419 2 0	Do. ..	....	Prokash Chandra Datta.	..	1,619 1 11	..
5226	Houla No. 244 in Golakpura, pargana Dakhin Shahabazpur.	911 7 0	Do. ..	....	Sashi Kumar Das	..	491 7 0	..
5226	Houla No. 281 in Golakpura, pargana Dakhin Shahabazpur.	615 0 0	Do. ..	....	Sreenath Shaha ..	..	284 6 2	..
5226	Houla No. 322 in Golakpura, pargana Dakhin Shahabazpur.	1,072 13 0	Do. ..	....	Ditto ..	..	965 10 0	..
5229	Houla No. 3 in Ratanpura, pargana Uttar Shahabazpur.	861 15 0	Do. ..	....	Annada Charan Ghose.	..	1,008 12 0	..
5229	Houla No. 59 in Ratanpura, pargana Uttar Shahabazpur.	596 1 0	Do. ..	....	Madan Mohan Ray and others.	..	296 1 0	..
5229	Houla No. 126 in Ratanpura, pargana Uttar Shahabazpur.	542 10 0	Do. ..	....	Montazuddi Mean and others.	..	542 10 0	..
5230	Houla No. 435 in Bara Dhali, pargana Dakhin Shahabazpur.	1,640 7 0	Do. ..	....	Tofel Ahmed Chaudhury and others.	..	1,601 5 0	..

Tauzi No.	Name of mahal and pargana.	Sadar jama of whole estate.	Whether the whole estate is to be sold.	If only a share is to be sold, specification of such share or shares.	Names of proprietors of property to be sold.	If only a share is to be sold, the sadar jama of such share.	If the whole estate is to be sold, the arrears due from it.	If only a share is to be sold, the arrears due from it.
1	2	3	4	5	6	7	8	9
		Rs. a. p.				Rs. a. p.	Rs. a. p.	Rs. a. p.
5235	Houla No. 19 in Char Tabgi, pargana Dakhin Shahabazpur.	4,937 3 0	Whole	....	Mahesh Chandra Podder.	..	3,231 3 0	..
5236	Houla No. 16 in Dhali Gournagar, pargana Dakhin Shahabazpur.	586 10 0	Do.	....	Promatha Nath Sarkar.	..	390 10 0	..
5236	Houla No. 210 in Dhali Gournagar pargana Dakhin Shahabazpur.	1,008 9 0	Do.	....	Charu Bala Devi ..	..	843 2 4	..
5236	Houla No. 352 in Dhali Gournagar, pargana Dakhin Shahabazpur.	2,161 2 0	Do.	....	Ditto ..	..	879 2 0	..
5239	Houla No. 3 in Madhyam Lanchi Dhali, pargana Dakhin Shahabazpur.	3,021 13 0	Do.	....	Annada Prosad Nath.	..	1,780 0 0	..
5242	Abadkari Taluk No 2 in Manpura, pargana Jazira.	2,615 9 0	Do.	....	Raj Narain Tribedi	..	1,010 0 0	..
5246	Houla No. 123 in Dhali Gournagar, pargana Dakhin Shahabazpur.	743 6 0	Do.	....	Tofazzal Bari ..	..	397 13 8	..
5246	Houla No. 202 in Dhali Gournagar, pargana Dakhin Shahabazpur.	979 2 0	Do.	....	Harimohan Shaha	..	519 2 0	..
5246	Houla No. 254 in Dhali Gournagar, pargana Dakhin Shahabazpur.	1,375 13 0	Do.	....	Badsha Mean ..	..	891 14 7	..
5246	Houla No. 801 in Dhali Gournagar, pargana Dakhin Shahabazpur.	536 6 0	Do.	....	Basanta Kumar Lode	..	536 6 0	..
5257	Houla No 2 in Char Krista Prosad, pargana Jazira.	7,088 0 0	Do.	....	Murari Mohan Mukherjee.	..	3,120 3 10	..
5268	Abadkari Talul No. 2 in Char Manpura, pargana Jazira.	1,492 0 0	Do.	....	Joheda Khatun and others.	..	2,226 0 0	..
6496	Taluk No. 2 in Chak Naltona, pargana Sundarbans.	6,291 0 0	Do.	....	Surendra Nath Sen Ray Chaudhury.	..	2,000 0 0	..
6569	Osat houla No. 1035/12 in Char Fasson, pargana Jazira.	939 3 0	Do.	....	Jalal Ahammad ..	..	535 1 8	..
6569	Osat houla No. 1135/238 in Char Fasson, pargana Jazira.	538 3 0	Do.	....	Darbesh Ali and others.	..	377 10 9	..
6695	Osat Taluk No. 3 in Depshabunia, pargana Selimabad.	631 5 0	Do.	....	Bimala Sundari Chaudhurani.	..	631 5 0	..

The above tenures are being advertised for sale for the instalments of revenue which were due on or before 29th Falgun, 1343 B.S., the latest date of payments of which was 28th March 1936.

Barisal, the 31st August, 1936.

[ILLEGIBLE] *for* Collector.

Notification A.

NOTICE is hereby given under sections 6 and 13, Act XI of 1859, that the undermentioned estates and shares of estates in the district of Midnapore will be put up for sale at the office of the Collector of that district on the 25th September 1936, at 12 noon, for arrears of revenue* and other demands, which by law are realizable as arrears of land revenue.

When in columns 5, 7 and 9 of the following statement it is stated that only a share is to be sold, it is to be understood that a separate account is kept for that share :—

Tauzi No.	Name of mahal and pargana.	Sadar jama of whole estate.	Whether the whole estate is to be sold.	If only a share is to be sold, specification of such share or shares.	Names of proprietors of property to be sold.	If only a share is to be sold, the sadar jama of such share.	If the whole estate is to be sold, the arrears due from it.	If only a share is to be sold, the arrears due from it.
1	2	3	4	5	6	7	8	9
		Rs. a. p.				Rs. a. p.	Rs. a. p.	Rs. a. p.
163	Pargana Barada, estate Barada Tappa.	53,546 0 0	..	Separate Account No 1—8 annas share of the mahal. All other shares than those specified will be excluded from the sale.	Radhikalal Goswami and others.	25,852 13 4	..	2,841 4 3
312	Pargana Batitaki, estate Palgora.	630 1 7	Entire	....	Sri Kishan Darghar.	..	79 4 0	..
327	Pargana Birkul, estate Dihi-baranga *alias* Dibaranga.	3,195 3 8	..	Residuary Account— 8 as. 12 gds. 3 k. 15 til share of mauza Baranga. 2 as. 5 gds. share of mauzas Rania and Hajipur in one group. 3 as. 3 k. 8 til share of mauza Jharpadima. 3 as. 15 gds. share of mauzas Arjuni and Shan Balishal in one group. 2 annas share of mauza Kulbudhi. 5 as. 8 gds. 1 k. 1 kt. share of mauza Bagmari. 2 as. 5 gds. share of mauzas Fatehpur, Pariharpur and Joshipur in one group. 11 as. 5 gds share of mauzas Kabra and Jhangeria in one group. 5 as. 1 gd. 1 k. share of mauza Birampur. All other shares than those specified will be excluded from the sale.	Bhudar Behari Chaudhuri and others.	517 10 1	..	121 0 8
440	Pargana Chandrakona, mahal Beraberia	10,925 8 5	..	Separate account No. 2—16 annas share of mauza Kamargeria (Nij).	Khudiram Mukhapadhya and others.	1,813 6 6	..	236 9 9
				Separate Account No. 6—16 annas share of mauzas Beraberia, Hijli and Hiradharpur. All other shares than those specified will be excluded from the sale.	Ramprasad Roy and others.	1,365 11 3	..	178 3 3
478	Pargana Chandrakona, mahal Kuldaha.	10,784 7 2	..	Separate Account No. 1—4 as. 5 gds. 1 k. 1 kt. share of the mahal. All other shares than those specified will be excluded from the sale.	Debendra Lal Khan and others.	2,875 13 8	..	372 11 0
510	Pargana Chandrakona, mahal Rameswarpur.	11,594 11 8	Entire	....	Monoharlal Sil ..	..	1,517 1 8	..
548	Pargana Chetua, mahal Gangpur.	8,143 13 10	Do. ..	....	Janakilal Khandelwala.	..	3,843 8 10	..
953	Pargana Kasijora, mahal Harinarayanchak	2,397 10 3	Do. ..	....	Munshi Abdul Jalil.	..	892 10 0	..
954	Pargana Kasijora, mahal Harijhama.	3,135 10 2 including police.	..	Separate Account No. 1—4 as. 5 gds 1 k. share of the mahal. All other shares than those specified will be excluded from the sale.	Khirode Nath Bandapadhya.	833 15 3 including police	..	91 4 0 including police.
1039	Pargana Kismat Kasijora, mahal Gopalnagar.	1,511 0 9	Entire	....	Bhuban Mohan Jana and others.	..	637 0 8	..

Tauzi No.	Name of mahal and pargana.	Sadar jama of whole estate.	Whether the whole estate is to be sold.	If only a share is to be sold, specification of such share or shares.	Names of proprietors of property to be sold.	If only a share is to be sold, the sadar jama of such share.	If the whole estate is to be sold, the arrears due from it	If only a share is to be sold, the arrears due from it
1	2	3	4	5	6	7	8	9
		Rs. a. p.				Rs. a. p.	Rs. a. p.	Rs. a. p.
1042	Pargana Kismat Kasijora, mahal Jagatpore.	852 11 8	..	Residuary Account - 12 annas share of the estate. All other shares than those specified will be excluded from the sale.	Raj Krista Mukhapadhya.	639 8 9	..	69 8 4
1196	Pargana Kedarkundu, mahal Gagrani.	724 12 0	..	Residuary Account 16 annas share of mauzas Dayalpur, Palgeria and Sutchhora. All other shares than those specified will be excluded from the sale.	Narendra Kumar Nag.	573 13 1	..	62 3 3
1466	Pargana Khandar, mahal Barbanshi.	19,084 9 0	..	Residuary Account - 2as. 13gds. 1k. 1kt. share of mauza Chandagobra. 10as. 13gds. 1k. 1kt. share of mauza Chaksafi. 1a. 6gds. 2k. 2kt. share of mauzas Danrra, Kharika and Bangaldari. 1a. 6gds. 2k. 2kt. share of mauza Kharika. 1a. 6gds. 2k. 2kt. share of mauza Chandkuri. 2as. 13gds. 1k. 1kt. share of mauza Nibra. 5as. 6gds. 2k. 2kt share of mauzas Satsal, Madhabpur and Protappore. 3as. 12gds share of mauza Chaulkhola. 1a. 6gds. 2k. 2kt. share of mauzas Chandkuri, Batitaki and Chandkuri. 2as. 13gds. 1k. 1kt. share of mauzas Bara Chahara, Lodhna, Sanchahara. 10 as. 13 gds. 1 k. 1 kt. share of mauzas Nayanchak and Bamal. 1 a. 6 gds. 2 k. 2 kt. share of mauzas Chandkuri and Khoranchak. 1 a. 6gds. 2 k. 2 kt. share of mauzas Chandkuri (Paraganandachak) and Mazzafarchak. Separate Account No. 52— 7 as. 11 gds 2 k. 2 kt. share of mauza Uttar Erai. 5 as 6gds. 2 k. 2 kt share of mauza Masagram. 2 as. 18 gds. 1 k. 1 kt. share of mauzas Maipur and Malpurbati. 5 as. 6gds. 2 k. 2 kt share of mauzas Mirzachak, Pudrangi, Kodipur and Rolkanda. All other shares than those specified will be excluded from the sale.	Pulin Behari Dutt and others. Hariipada Atta and others.	1,015 0 9 1,649 4 3	.. ..	0 8 11 180 6 0
1604	Pargana Khandar, mahal Kolanda.	3,542 0 6	Entire	....	Chowdhury Kalipada Mallick and others.	..	388 0 0	..
1660	Pargana Khandar, mahal Panchpara.	4,053 11 5	..	Separate Account No. 10 2 as. 1 gd. 3 k. 2 kt. share of mauzas Chak Abdulla, Arun Fatehchak, Jamuna, Bailgeria and Ranibati 2 as. 13 gds. 1 k. 1 kt. share of mauzas Basantapur and Lokshya in one group. All other shares than those specified will be excluded from the sale.	Dhirendra Nath Ghose and another.	982 11 0	..	107 7 9

Tauzi No.	Name of mahal and pargana.	Sadar jama of whole estate	Whether the whole estate is to be sold.	If only a share is to be sold, specification of such share or shares.	Names of proprietors of property to be sold.	If only a share is to be sold, the sadar jama of such share.	If the whole estate is to be sold, the arrears due from it.	If only a share is to be sold, the arrears due from it.
1	2	3	4	5	6	7	8	9
		Rs. a. p.				Rs. a. p.	Rs. a. p.	Rs. a. p.
3070	Pargana Mandalghat, mahal Ramjangal	19,255 3 6	..	Separate Account No. 9 2 as. 5 gd. share of mauzas Barumbil, Gujrat, Brindabanpur, Buxechak Kist, Gujratchat, Magura, Kalagachi-Jalkai, Gholachak, Hatpota, Chitra, Dumarah, Darlala, Gopalpur, Ghanashyamjote and Kalagechiadihi. All other shares than those specified will be excluded from the sale	Monoharlal Sil ..	2,708 9 0	..	354 9 0
2051	Pargana Protapvas, mahal Kotebar.	6,229 9 9	..	Residuary Account— 2 annas share of mauzas Gokulpur and Purulda. 15 gandas share of mauzas Khorol, Kotebar, Lochhubar and Kanpore. 2 annas share of mauza Alua. 2 annas share of mauza Chakreza. 15 gandas share of mauza Raghunathpur. 2 annas share of mauza Purusattampur. 15 gandas share of mauza Patashpur. 2 annas share of mauza Krishnapur. 3 as. 5 gds. share of mauza Kharan. 15 gandas share of mauza Chak Kalika. 15 gandas share of mauza Kekai. 5 as. 15 gds. share of mauza Kalnara. 15 gandas share of mauza Chakfarid. All other shares than those specified will be excluded from the sale.	Chowdhury Padmalochan Roy Mohapatra and others.	533 1 5	..	111 9 0
2105	Pargana Sabong, mahal Bahabalpur.	2,697 3 0	..	Residuary Account— 11 as. 18 gds. share of mauza Hauna. 2 as. 8 gds. 3 k. share of mauza Bahabalpur. 8 annas share of mauzas Padiha, Pindrui, Dangal-ha and Panpara. 16 annas share of mauza Chhoto Khelna. 3 as. 8 gds. 3 k. share of mauza Jhaparara. All other shares than those specified will be excluded from the sale.	Upendranath Maity and others.	517 0 10	..	235 4 9
2476	Pargana Shahpur, mahal Papanharicharan *alias* Papan.	531 10 6	Entire	....	Benoy Krishna Pal.	..	247 1 7	..
2876	Pargana Potashpur, mahal Dehat Gokulpur.	35,739 0 0	Do ..	....	Satyendra Nandan Das Mohapatra and others.	..	5,758 14 10	..

* *N.B.*—All the estates except tauzi Nos. 548(E), 953 (E), 1039(E), 2051 (R.A.), 2105 (R.A.), 2476(E) are being advertised for sale for arrears of revenue which were due on or before the 31st Jaistha, 1343 B.S., and of which the latest date of payment was 29th June 1936.

The estates bearing tauzi Nos. 548(E), 953(E), 1039(E), 2105(R. A.), 2476(E) are being advertised for sale for arrears of revenue which were due on or before 29th Falgoon, 1342 B. S. and 31st Jaistha, 1343 B.S., and of which the latest dates of payment were 28th March 1936 and 29th June 1936.

The estate No. 2051 (R.A.) is being advertised for arrears of revenue which were due on or before 32nd Jaistha, 31st Bhadra, 30th Agrahayan and 30th Falgoon, 1341 B.S., 32nd Jaistha, 31st Bhadra, 30th Agrahayan and 29th Falgoon, 1342 B. S., and 31st Jaistha, 1343 B. S., and of which the latest dates of payment were 28th June 1934, 28th September 1934, 12th January 1935, 28th March 1935, 28th June 1935, 28th September 1935, 13th January 1936, 28th March 1936, and 29th June 1936.

Midnapore, the 29th August 1936.

B. BAGCHI, *for* Collector.

Notification B.

NOTICE is hereby given under sections 5 and 13, Act XI of 1859, that unless the arrears or demands, which were due on or before 30th Falgoon, 1341 B.S., 32nd Jaistha, 31st Bhadra and 29th Falgoon, 1342 B.S. and 31st Jaistha, 1343 B.S., and of which the latest dates of payment were 28th March 1935, 28th June 1935, 28th September 1935, 28th March 1936, and 29th June 1936 and which will be due on or before 31st Bhadra, 1343 B.S., and of which the latest date of payment will be 28th September 1936, mentioned below are paid on or before the next latest date of payment, viz., the 28th September 1936, the under-mentioned estates or shares of estates in the district of Midnapore will be notified for sale under sections 6 and 13 of Act XI of 1859 :—

Tauzi No.	Name of mahal and pargana	Sadar jama of whole estate.	Whether the whole estate is to be sold.	If only a share is to be sold, specification of such share or shares.	Names of proprietors of property to be sold.	If only a share is to be sold, the sadar jama of such share.	If the whole estate is to be sold, the arrears due from it.	If only a share is to be sold, the arrears due from it.	Nature and amount of demand for which to be sold.
1	2	3	4	5	6	7	8	9	10
		Rs. a. p.				Rs. a. p.	Rs. a. p.	Rs. a. p.	Rs. a. p.
1935	Pargana Midnapore, mahal Nankar Ballavpore.	9,055 5 9	Entire	....	Bejoy krishna Ray and others.	..	3,083 3 7 for March 1935 to September 1935 and March and June, 1936.	..	L. R.— 3,083 3 7 Cess— 3,509 14 6 September 1936 — L. R.— 708 8 8 Cess— 1,043 10 6

Midnapore, the 29th August 1936.

B. BAGCHI, *for* Collector.

Notification of Sale.

NOTICE is hereby given, under section 6 read with Act VII (B.C.) of 1868, that the undermentioned Khas Mahal tenures in the district of Noakhali will be put up for sale under section 24 as the balances of the purchase money of previous sales were not made good within the time prescribed by law at the office of the Collector of the district on the 24th September 1936, for arrears of revenue (and other demands which by law are realisable as arrears of Land Revenue).

The tenure under lot No. 213 was previously sold for the arrears of revenue which were due on or before the 30th Agrahayan, 1342 B.S., of which the latest date of payment was 13th January 1936, and the tenure under Lot No. 222 for the arrears which were due on or before the 29th Falgoon, 1342 B.S., of which the latest date of payment was 28th March 1936.

Tauzi No.	Name of mahal and pargana	Sadar jama of the whole estate.	Whether the whole estate is to be sold	If only a share is to be sold, specification of such share or shares	Names of proprietors of property to be sold.	If only a share is to be sold, the sadar jama of such share.	If the whole estate is to be sold, the arrears due from it.	If only a share is to be sold, the arrears due from it.
1	2	3	4	5	6	7	8	9
		Rs a. p.				Rs a. p.	Rs. a p.	Rs. a. p.
Lot No. 213 tauzi No. 1686.	Char Alexander, tenure No. 416, pargana Zazirah.	1,508 4 0	Whole	..	Shajal Haque ..	.	Rent— 1,085 0 9 Cess— 874 9 6	
Lot No. 222, tauzi No. 1942.	Char Falcon, tenure No. 192, pargana Zazirah.	1,089 1 0	Do. ..	....	Nawab Ali Choudhury.	..	Rent— 810 13 0 Cess— 79 2 3	

Noakhali, the 2nd September 1936.

[ILLEGIBLE], *for* Collector.

Notification of Sale.

NOTICE is hereby given, under sections 6 and 13 of Act XI of 1859, read with Act VII (B.C.) of 1868, that the undermentioned estates and shares of estates and Khas Mahal tenures in the district of Noakhali will be put up for sale at the office of the Collector of the district on the 24th September 1936, at 12 noon, for arrears of revenue (and other demands which by law are realisable as arrears of land revenue).

When in columns 5, 7 and 9 of the following statement it is stated that only a share is to be sold, it is to be understood that a separate account is kept for that share :—

Tauzi No.	Name of mahal and pargana.	Sadar jama of the whole estate.	Whether the whole estate is to be sold.	If only a share is to be sold, specification of such share or shares.	Names of proprietors of property to be sold.	If only a share is to be sold, the sadar jama of such share.	If the whole estate is to be sold, the arrears due from it.	If only a share is to be sold, the arrears due from it.
1	2	3	4	5	6	7	8	9
		Rs. a. p.		**Estate.**		Rs. a. p.	Rs. a. p.	Rs. a. p.
Lot No. 2, tauzi No. 18.	Char Afzal Fakira and Char Lakshmi, pargana Sandwip.	2,847 12 8	Whole	....	Raicha Khatun and others.	..	L. R.— 8,020 11 5 Cess— 4,812 8 3	..
Lot No. 13, tauzi No. 104.	Char Hudrakhali Mudafat Hoshen Ghat Majhi, pargana Sandwip.	1,004 0 0	Share	Residuary share his hya 5 as. 6 gds. 2 cr. 2 kt. All other shares than that specified will be excluded from sale.	Sheikh Jafor Ahamed Choudhuri and others.	664 10 4	..	L. R.— 21 5 6 Cess— 141 10 0
Lot No. 15, tauzi No. 200.	Char Ramiz, pargana Sandwip.	2,287 0 0	Whole	....	Babu Madhab Ch. Bhowmik, Revenue agent, receiver to the Wakf Estate of late Moazzam Hossen Choudhury.	..	L. R.— 72 0 0 Cess— 1,257 0 6	..
Lot No. 16, tauzi No. 208.	Sukchar, pargana Zazirah.	2,004 0 0	Do. ..	....	Manabborennessa Choudhurani and others.	..	L. R.— 572 7 9 Cess— 183 8 0	..
Lot No. 20, tauzi No. 1574.	Char Thak Hudrakhali, pargana Sandwip.	3,516 0 0	Do. ..	....	Sheikh Ahmed Sobhan Choudhury.	..	L. R.— 518 0 0	..
Lot No. 21, tauzi No. 1577.	Thak Char Sekandar, pargana Zazirah.	1,014 0 0	Do. ..	....	Babu Madhab Chandra Bhowmik, receiver to the estate of Moazzam Hoshen Choudhury and others.		L. R.— 159 7 3	..
				Khas Mahal Tenures.				
Lot No. 88, tauzi No. 1662.	Char Kuchiamora, tenure No. 2, pargana Sandwip.	756 14 0	Whole	....	Golam Khaleq ..	..	L. R.— 378 7 0 Cess— 31 12 6	..
Lot No. 211, tauzi No. 1686.	Char Sekandar, tenure No. 2, pargana Zazirah.	714 5 0	Do.	....	Sachindralal Das	..	L. R.— 22 5 0 Cess— 8 15 9	..

These estates and shares of estates and Khas Mahal tenures are being advertised for sale for the instalments of revenue which were due on or before the 31st Jaistha, 1343 B.S. of which the latest date of payment was the 29th June, 1936.

Noakhali, the 2nd September 1936. [ILLEGIBLE], *for* Collector.

Notification A.

NOTICE is hereby given under sections 6 and 13 of Act XI of 1859 that the undermentioned estates and shares of estates in the district of Birbhum will be put up for sale at the office of the Collector of that district on the 25th September 1936, at 12 noon, for arrears of revenue (and other demands which by law are realisable as arrears of land revenue).

When in columns 5, 7 and 9 of the following statement it is stated that only a share is to be sold, it is to be understood that a separate account is kept for that share.

These estates are being advertised for sale for instalments of revnue due on or before the 31st Jaistha, 1343 B.S., of which the latest date of payment was 29th June 1936:—

Tauzi No.	Name of mahal and pargana.	Sadar jama of whole estate.	Whether the whole estate is to be sold.	If only a share is to be sold, specification of such share or shares.	Names of proprietors of property to be sold.	If only a share is to be sold, the sadar jama of such share.	If the whole estate is to be sold, the arrears due from it.	If only a share is to be sold, the arrears due from it.
1	2	3	4	5	6	7	8	9
		Rs. a. p.				Rs. a. p.	Rs. a. p.	Rs. a. p.
2	Sahalampur, thana Dubrajpur, pargana Sahalampur.	52,008 5 0	No ..	Residuary share excepting S. A. Nos. 4 to 11—8 gds. 3 kr. 1 kt. 13 tils share of mauzas Agoa, Mengalpur, Adampur, etc., in Groups I, III, IV, V, VI, VII and VIII and 12 annas of share mauzas in Group IX.	Shamapada Basu and others.	7,645 10 8	..	611 5 5
				S. A. No. 7—11 as. 17 gds. 3 kr. 7 tils share of mauzas Pirijpur, Pirpur, Kamalpur, etc. All other shares besides those specified above will be excluded from the sale.	Brahma Niranjan Chakraverty.	5,424 1 6	..	544 2 0
4	Senbhum, thana Bolpur, pargana Senbhum.	16,911 12 6	No ..	S. A. No. 1—16 annas share of mauza Binuria in Group XI and 8 annas share of mauzas Chaumandalpur, Hansra, etc., in Group XII.	Sudhakar Mazumdar.	849 0 8	..	27 8 6
				S. A. No. 2—4 gds. 1 kr. 2 kt. 7 tils share of mauzas Kukutia, Raipur, etc.	Ranjit Sinha and others.	803 4 0	..	62 12 0
				S. A. No. 3—5 as. 6 gds. 2 kr. 2 kt. share of mauzas Raipur, Chowpahari jungle, Radhanagar, etc., and 16 annas share of mauzas Chandanpur, Palsa, Jahanabad, etc.	Subhasini Dassi	15,577 2 6	...	1,459 15 11
				S. A. No. 6—8 gds. 2 kr. 2 kt. 10 tils share of mauzas Raipur, Chowpahari jungle, Radhanagar, etc.	Anukul Chandra Sinha.	1,150 5 6	..	80 13 9
				S. A. No. 7—8 gds. 2 kr. 2 kt. 7 tils share of mauzas Kakutia, Raipur, Chowpahari jungle, etc.	Sudhir Kumar Sinha.	1,150 5 6	..	268 2 9
				S. A. No. 8—4 gds. 1 kr. 1 kt. 7 tils share of mauzas Raipur, Chowpahari jungle, etc.	Nakula Bala Ghosh.	800 3 4	..	62 12 0
				S. A. No. 9—8 gds. 3 kr. 2 kt. 8 tils share of mauzas Raipur, Chowpahari jungle, Rupchak, etc.	Sudhir Kumar Sinha.	1,150 5 4	..	375 2 3
				S. A. No. 10.—8 gds. 3 kr. 2 kt. 8 tils share of mauzas Raipur, Chowpahari jungle, Radhanagar, etc.	Prokash Chandra Sinha and others.	1,150 5 4	..	375 2 8
				S. A. No 11.—4 gds. 1 kr. 2 kt. 6 tils share of mauzas Kakutia, Raipur, etc., in Groups Nos. I, III, IV, V, etc.	Saila Bala Debi	1,737 5 6	..	468 11 6
				S. A. No. 12.—1 a. 15 gds. 2 kr. 14 tils share of mauzas Kakutia, Raipur, Chowpahari jungle, Radhanagar, etc.	Minor Puspa Kumari Sinha.	4,950 14 3	..	465 2 9
				S. A. No. 20.—1 a. 15 gds. 2 kr. 16 tils share of mauzas Raipur, Radhanagar, Dakshingram, etc.	Bhola Nath Ghosh and others.	1,882 4 4	..	146 7 3
				S. A. No. 25—5 gds. 3 kr. 2 kt. 1 til share of mauzas Raipur, Kakutia in Bolpur thana; 11 gds. 3 kr. 1 kt. 14 tils share of mauzas Chowpahari jungle, etc. All other shares besides those specified above will be excluded from the sale.	Sourindra Narayan Sinha.	1,809 2 6	..	825 0 6

Tauzi No.	Name of mahal and pargana.	Sadar jama of whole estate.	Whether the whole estate is to be sold.	If only a share is to be sold, specification of such share or shares.	Names of proprietors of property to be sold.	If only a share is to be sold, the sadar jama of such share.	If the whole estate is to be sold, the arrears due from it.	If only a share is to be sold, the arrears due from it.
1	2	3	4	5	6	7	8	9
		Rs. a. p.				Rs. a. p.	Rs. a. p.	Rs. a. p.
14	Bhurkunda, pargana Bhurkunda, thana Bolpur.	15,142 9 0	No ..	S. A. No. 1—2as 13gds. 1kr 1kt. share of the estate. All other shares besides that specified above will be excluded from the sale.	Birendra Nath Mustafi and others.	2,523 11 6	..	216 8 6
15	Tarapur, thana Moureshwar, pargana Swarupsinha.	13,470 8 0	Yes, 16 annas share.	....	Maharaj Kumar Jagadish Nath Roy.	..	830 8 0	..
16	Maheswarpur, thana Illambazar, pargana Senbhum.	12,897 8 7	No ..	S. A. No. 5—4 annas share of mauzas Palsa, Jahanabad, Ulandi, etc., in Group XII.	Sudhir Kumar Sinha.	758 7 0	..	59 4 0
				S. A. No. 6—4 annas share of mauzas in Group XII.	Ditto ..	758 7 0	..	59 4 0
				S. A. No. 7—4 annas share of mauzas in Group XII.	Prokash Chandra Sinha.	758 7 0	..	59 4 0
				All other shares than those specified above will be excluded from the sale.				
18	Kalikapur Krishnagar, thana Dubrajpur, pargana Jainujal.	6,234 6 0	Yes, 16 annas share.	....	Kumar Pashupati Nath Malia.	..	1,384 12 5	..
21	Balta, thana Suri, pargana Jainujal.	10,846 5 0	No ..	S. A. No. 8—2 as. 10 gds. share of mauzas Renguni, Bodpur, Chak Anulia, Jatra, Chhota Gunsima, etc.	Hari Har Nath Das.	890 12 0	..	89 7 11
				All other shares besides that specified above will be excluded from the sale.				
22	Sainthia, pargana Moureshwar Sabek, thana Sainthia.	15,150 9 0	No ..	S. A. No. 3—13 gds. 1 kr. 1 kt. share of the estate.	Ponchanan Ghosh	631 4 6	..	0 15 3
				S. A. No. 6—13 gds. 1 kr. 1 kt. share of the estate.	Sanat Kumar Ghosh.	631 4 6	..	61 0 0
				S. A. No. 11—13 gds. 1 kr. 1 kt. share of the estate.	Tarapada Ghosh	631 4 6	..	60 15 3
				S. A. No. 12—13 gds. 1 kr. 1 kt. share of the estate.	Ditto	631 4 6	..	60 15 3
				S. A. No. 14—13 gds. 1 kr. 1 kt. share of the estate.	Prosad Chandra Ghosh.	631 4 6	..	60 15 6
				All other shares than those specified above will be excluded from the sale.				
25	Indas, thana Labpur, pargana Kutubpur.	5,687 2 8	No ..	S. A. No. 1—8 annas share of the estate.	Kali Das Das ..	2,843 9 5	..	495 8 5
				All other shares besides that specified above will be excluded from from the sale.				
28	Daluk, thana Moureshwar, pargana Swarupsinha.	1,395 10 0	No ..	Residuary share excepting S. A. No. 1—7 as. 10 gds. share of the estate.	Nalini Ranjan Sinha and others.	654 3 0	..	64 6 0
				S. A. No. 1—8 as. 10 gds. share of the estate.	Kalachand Das and others.	741 7 0	..	74 10 6
31	Purandarpur, thana Suri, pargana Purandarpur.	6,299 4 0	No ..	S A. No. 3 —2 annas share of the estate.	Ram Ranjan Hati and others.	787 7 10	..	78 3 6
				S. A. No. 6—2 as. 10 gds. share of the estate.	Sunita Debi ..	984 4 5	..	97 12 6
				All other shares besides those specified above will be excluded from the sale.				
34	Khala, thana Nanoor, pargana Barbaksinha.	3,750 2 9	No ..	S. A. No. 2—3 as. 10 gds. 3 kr. 2 kt. 5 tils share of the estate.	Girish Chandra Chandra and others.	831 6 6	..	26 11 3
				S. A. No. 7—4 as. 2 kr. 1 kt. 10 tils share of the estate.	Ditto ..	944 11 3	..	60 11 3
				All other shares besides those specified above will be excluded from the sale.				

Tauzi No.	Name of mahal and pargana.	Sadar jama of whole estate.	Whether the whole estate is to be sold.	If only a share is to be sold, specification of such share or shares.	Names of proprietors of property to be sold.	If only a share is to be sold, the sadar jama of such share.	If the whole estate is to be sold, the arrears due from it.	If only a share is to be sold, the arrears due from it.
1	2	3	4	5	6	7	8	9
		Rs. a. p.				Rs. a. p.	Rs. a. p.	Rs. a. p.
85	Ramkantapur, thana Nanoor, pargana Barbaksinha.	2,560 6 0	No ..	S. A. No. 2—3 as. 10 gds. 3 kr. 2 kt. 5 tils share of the estate.	Girish Chandra Chandra and others.	567 9 1	..	17 12 3
				S. A. No. 7—4 as. 2 kr. 1 kt. 10 tils share of the estate.	Ditto ..	645 1 6	..	19 14 0
				All other shares besides those specified above will be excluded from the sale.				
40	Rautara, thana Dubrajpur, pargana Jainujal.	784 6 0	Yes, 16 annas share.	....	Ranee Broja Bala Debi.	..	74 6 0	..
53	Sahapur, thana Suri, pargana Jainujal.	3,431 5 6	No ..	S. A. No. 1—2 as. 13 gds. 1 kr. 1 kt. share of the estate.	Ditto ..	572 2 9	..	58 8 3
				All other shares besides that specified above will be excluded from the sale.				
66	Murandi, thana Labpur, pargana Kutubpur.	1,531 15 0	No ..	Residuary share excepting S. A. Nos. 1 and 2.	Suprobhat Chandra and others.	510 10 4	..	110 10 6
				All other shares besides that specified above will be excluded from the sale.				
73	Kirtihat, thana Labpur, pargana Khargram.	1,070 5 6	No ..	S. A. No. 2—5 as. 6 gds. 2 kr. 2 kt. share of mauzas Sundara, Koshbagi, Barakalikapur, Neapur, etc., in Groups I to XI.	Panchkori Debi and others.	654 7 9	..	654 2 7
				All other shares besides that specified above will be excluded from the sale.				
74	Ditto .	2,222 13 0	No ..	Residuary share—4 as. 19 gds. 3 tils share of mauzas Sundara, Hapina, Bandilhat, etc.	Sufia Khatun Bibi and others.	543 10 2	..	263 0 9
				All other shares besides that specified above will be excluded from the sale.				
84	Mandari, thana Labpur, pargana Khargram	719 5 0	Yes, 16 annas share.	....	Maulvi Golam Gous and others.	..	52 5 0	..
89	Indas, thana Labpur, pargana Kutubpur.	3,876 4 0	No .	Residuary share excepting S. A. Nos. 6, 8, 9 to 14—9 as. 10 gds. share of the estate.	Raghu Ram Bhattacharji.	809 13 3	..	25 4 0
				S. A. No. 10—16 annas share of mauzas Kendua, Patherghata, Talbona, Indas, etc.	Nitai Chandra Sinha Biswas.	2,068 13 7	..	148 13 7
				All other shares besides those specified above will be excluded from the sale.				
90	Bansanka, thana Suri, pargana Jainujal	3,769 11 6	Yes, 16 annas share.	....	Ram Ranjan Hazra and others.	..	375 6 0	..
94	Gokulta, thana Labpur, pargana Gokulta.	3,250 14 0	No ..	S. A. No. 1—8 annas share of the estate	Chinmoyee Debi and others.	1,625 7 0	..	341 15 9
				S. A. No. 4—3 as. 15 gds. 2 kr. 13 tils share of the estate.	Ditto ..	767 9 1	..	22 8 5
				All other shares besides those specified above will be excluded from the sale.				
103	Karun, thana Suri, pargana Khatanga	1,383 3 0	No ..	Residuary share excepting S. A. Nos. 1 to 7 and 10 and 12 5 as. 17 gds. 2 kt. share of the estate.	Bepin Behari Chatterjee and others.	504 6 9	..	30 4 8
				All other shares besides that specified above will be excluded from the sale.				
107	Punur, thana Muhammadbazar, pargana Akbarsahi.	1,176 13 0	No ..	Residuary share excepting S. A. Nos. 5 and 6—7 as. 18 gds. 3 kr. share of the estate.	Panchanan Bhattacharjee.	583 12 10	..	37 1 5
				All other shares besides that specified above will be excluded from the sale.				

Tauzi No.	Name of mahal and pargana	Sadar jama of whole estate.	Whether the whole estate is to be sold.	If only a share is to be sold, specification of such share or shares	Names of proprietors of property to be sold.	If only a share is to be sold, the sadar jama of such share.	If the whole estate is to be sold, the arrears due from it.	If only a share is to be sold, the arrears due from it.
1	2	3	4	5	6	7	8	9
		Rs. a. p.				Rs. a. p.	Rs. a. p.	Rs. a. p.
109	Dwarka, thana Labpur, pargana Ichapakhuria.	1,803 1 0	No ..	Residuary share excepting S.A. Nos 1 and 2—16 annas share of mauza Sitalgram in Group 1, and 5 annas share of mauzas Sonachituri, Monachituri in Group II, etc. All other shares besides that specified above will be excluded from the sale.	Sailendra Kumar Roy and others	582 11 0	..	198 1 9
114	Bongram, thana Nanoor, pargana Barbaksinha.	2,526 4 0	No ..	Residuary share excepting S. A. Nos. 1 to 10—3 as. 4 gds share of the estate. All other shares besides that specified above will be excluded from the sale.	Provash Chandra Mitra, sebait	505 3 11	..	50 7 0
122	Bajitpur, thana Moureshwar, pargana Akbarsahi.	2,996 1 0	No ..	Residuary share excepting S.A. Nos. 1 to 3—7 as. 10 gds. share of the estate.	Syama Dassi Debi and others.	525 7 7	..	56 11 7
				S. A. No. 1—16 annas share of mauzas Dhobanandapur, Bajitpur, etc. All other shares besides those specified above will be excluded from the sale.	Md. Badruzza ..	639 12 7	..	25 8 8
125	Kanutia, thana Moureshwar, pargana Swarupsinha.	1,640 6 0	Yes, 16 annas share.	....	Gobinda Chandra Mazumdar.	..	1,720 9 11	..
143	Syam Sundarpur, thana Nanoor, pargana Barbaksinha.	2,113 13 0	No ..	Residuary share excepting S. A. Nos. 1 and 2—4as. 6gds. 1kr. share of the estate. All other shares besides that specified above will be excluded from the sale.	Sindhu Bala Dasi and others.	569 11 9	..	102 12 9
153	Bahiri, thana Bolpur, pargana Barbaksinha.	2,014 8 0	No ..	Residuary share excepting S. A Nos. 1 to 3—8as, 3gds 1kr. share of the estate. All other shares besides that specified above will be excluded from the sale.	Tulsi Ram Choudhury.	776 6 8	..	18 13 3
154	Sankbaha, thana Nanoor, pargana Barbaksinha.	2,745 9 0	No ..	S. A. No. 2—4 annas share of the estate. All other shares besides that specified above will be excluded from the sale.	Surath Nath Banerjee.	686 6 3	..	67 10 3
158	Kadipur thana Labpur, pargana Kutubpur.	851 4 0	Yes, 16 annas share.	.. .	Souresh Chandra Choudhury and others.	..	80 4 0	..
160	Kotalghosa, thana Labpur, pargana Kutabpur.	774 11 0	Do. ..	....	Rance Brojo Bala Debi.	..	77 11 0	..
162	Bhurkunda, thana Suri, pargana Jainujal.	3,792 3 9	Do. ..	....	Jana Ranjan Roy	..	319 7 3	..
167	Januri, thana Suri pargana Khatanga.	978 11 0	Do. ..	...	Raj Kalika Nanda Mukherjee Bahadur.	..	99 11 0	..
168	Mahisa, thana Moureshwar, pargana Swarupsinha.	745 13 0	No ..	Residuary share excepting S. A. No. 1—12as. 13gds 1kr. 1kt. share of the estate. All other shares besides that specified above will be excluded from the sale.	Nalinakha Dutta and others.	590 6 11	..	59 3 3
170	Akuni, thana Moureshwar, pargana Swarupsinha.	1,832 7 0	No ..	S. A. No. 2—16 annas share of mauzas Radhanagor, Kazipur, Tilpara, etc. All other shares besides that specified above will be excluded from the sale.	Tarapada Mukherjee and others.	572 10 0	..	29 5 0
172	Majhigram, thana Suri, pargana Khatanga.	3,422 4 0	No ..	Residuary share excepting S. A. No. 1—12 annas share of the estate.	Munshi Golam Gous and others.	2,566 11 0	..	193 11 0
				S. A. No. 1—4 annas share of the estate. All other shares besides those specified above will be excluded from the sale.	Syamapada Roy and others.	855 9 0	..	64 9 0

Touzi No.	Name of mahal and pargana	Sadar jama of whole estate	Whether the whole estate is to be sold	If only a share is to be sold, specification of such share or shares	Names of proprietors of property to be sold.	If only a share is to be sold, the sadar jama of such share.	If the whole estate is to be sold, the arrears due from it	If only a share is to be sold, the arrears due for it.
1	2	3	4	5	6	7	8	9
		Rs a p				Rs. a p	Rs a p	Rs a p
176	Gopalnagar, thana Dubrajpur, pargana Kharni	1,774 7 0	No	8 A No 5 15 as 4gds 2kr 1kt 15tils share of mauzas Agua, Uttor Madanpur etc All other shares besides that specified above will be excluded from the sale	Ranee Broja Bala Debi	1,218 0 0	..	29 7 11
177	Rupuspur, thana Dubrajpur pargana Kharni,	3,524 15 0	No	8 A No 5 1a 3gds 1kr 1kt share of the estate. All other shares besides that specified above will be excluded from the sale	Kumar Brahma Niranjan Chakerverty	2,102 7 5		208 0 0
216	Hatia, thana Labpur, pargana Fatepur	1,935 0 0	No	Residury share except 8 A Nos 1, 3, 4 and 5—5 as 2 gds 2kr. share of mauzas Sashpur, Haripur etc, etc All other shares besides that specified above will be excluded from the sale	Mohendra Chandra Mukherjee and others	513 5 1	..	60 2 1
230	Nimtikuri thana Suri, pargana Haripur	602 10 0	Yes, 16 annas share		Ananda Moy Kabiraj and others.	..	6 11 3	.
234	Amrapalan, thana Suri, pargana Khatanga	565 7 11	No	Residuary share excepting 8 A No 1 - 16 annas share of mauza Abdurpur, Amrapalan, etc All other shares besides that specified above will be excluded from the sale	Surendra Narayan Sen and others.	534 8 6	..	24 13 0
245	Singan, thana Bolpur, pargana Barbaksinha	2,918 1 0	No ..	8 A. No 2—4 annas share of the estate All other shares besides that specified above will be excluded from the sale.	Satish Chandra Basu	729 8 3	.	37 14 9
250	Gonutia, thana Moureshwar, pargana Ichapakhuria	3,732 9 0	No	Residuary share excepting 8 A No 1 8 annas share of the estate. All other shares besides that specified above will be excluded from the sale	Kumar Krishna Ghosh	1,866 4 6		681 4 6
451	Bakhul, thana Labpur, pargana Kutubpur	2,806 5 0	No	Residuary share excepting 8 A. Nos 1 to 7 All other shares besides that specified above will be excluded from the sale	Dharani Dhar Banerjee	1,052 4 5		195 13 4
551	Jotemusa, thana Bolpur, pargana Jainujal	1,013 10 0	No .	Residuary share excepting S A Nos 5 and 11 16 annas share of mauzas Chhatarbandi, Bhramari, etc	Syed Saha Muhammad Abdul Hafiz and others.	600 11 0	.	5 8 6
613	Kamiksha, thana Rampurhat, pargana Kumarprotap	971 8 6	Yes, 16 annas share.		Sharashi Krishna Banerjee and others.		180 10 8	
623	Gopalpur, Daribhadrapur, thana Nalhati pargana Dhawa.	535 4 6	Do .	.	Swetbarani Debi		266 7 8	
657	Baswan, thana Nalhati, pargana Kumarprotap	3,572 8 8	No ..	8 A No 4 3as 15gds. share of the estate 8 A No 10 9as 5gds share of the estate All other shares besides those specified above will be excluded from the sale	Azibatannessa Bibi and others Khandkar Muhammad Abu-Ahasan and others	837 5 6 1,172 4 6	.. ..	532 5 5 612 15 0
661	Barla, thana Nalhati, pargana Sahajadpur	504 8 3	Yes, 16 annas share.		Purnendu Narayan Deb Barma and others		230 7 0	..
666	Sankor Bhadrapur, thana Nalhati, pargana Dhawa	7,477 3 11	No	Residuary share excepting S A Nos 1 and 2 - 11 annas share of mauzas Paschim Gobindapur, Radhagobindapur, Bhabanipur, etc	Purna Chandra Trivedi and others	3,140 8 8		1,425 7 9
671	Mahendrapur, thana Rampurhat, pargana Kumarprotap.	1,714 8 8	Yes, 16 annas share.		Ram Dassi Debi and others.	..	8 15 1	.
1003	Raghunathpur, thana Nalhati, pargana Sajahadpur	717 4 0	Do. .		Sabarnessa Bibi and others		255 10 6	..
1219	Pakurhans, thana Nanoor, pargana Barbaksinha.	1,898 7 5	No ..	Residuary share excepting S A Nos 2 to 6 3 as 11 gds 1kt 7 tils share of the estate All other shares besides that specified above will be excluded from the sale.	Profulla Chandra Mustafi and others	540 8 1	.	79 4 4

Suri, the 2nd September 1936

[ILLEGIBLE], *for* Collector

Advertisement of sale.

NOTICE is hereby given that the undermentioned plots of land, no longer required by Government, situated along the B. A. K. Section of the East Indian Railway, in the district of Murshidabad, will be put up to sale at 12 o'clock noon on the 10th November 1936 corresponding to 24th Kartik, 1343 B.S. (Fasli), at the Court of the Subdivisional Officer, Jangipur, district Murshidabad.

The purchasers of the several plots of lands will be subject to the following conditions :—

1st.—The purchasers will have no power to make any excavations on the land nearer than fifteen feet from the railway boundary or to plough the land nearer than three feet from the same.

2nd.—If the amount of purchase money does not exceed Rs. 100 the whole amount must be paid down at once.

3rd.—If the amount of purchase money exceeds Rs. 100, one-fourth of the amount must be immediately deposited. If the balance be not paid by noon of the fifteenth day after the sale, reckoning the day of sale as one, or if that day be a close holiday, then by noon of the first succeeding office day, the sale shall be cancelled, the sum deposited being forfeited to Government and the lot again put up for sale at the risk of the defaulting purchaser, after issue of advertisement, as in the case of original sale.

4th.—The plots of land will be sold subject to an annual assessment of Rs. 34 which will be subject to revision at the next general settlement of the temporarily-settled estates of the district to the highest bidders.

5th.—The sale will become final on receipt by the Collector of the orders of the Commissioner confirming it, and a regular conveyance will then be granted to the purchaser.

Consecutive lot number.	Name of district	Pargana and mauza.	Number of mile on which land is situated.	Situated on which side of the railway.	Approximate area of lot in acres and decimals.	Land excluded from sale from each lot.		Commencement and termination of lot.	Boundary of lot.
						Reasons for exclusion.	Acres and decimals.		
1	2	3	4	5	6	7		8	9
						Lot No. 1.			
1	Murshidabad.	Pargana Kankjole, mauza Kanupara *alias* Chak Kanupara, J. L. No. 56(old)/ 52(new), thana Shamshergani, Kalupara according to new J. L. No. 52.	87-88	North side of the railway line.	Total area of 11·11 acres comprising the cadastral survey plot No. 44 with an area of 9·80 acres and plot No. 45 with an area of 1·31 acres in village Kanupara.	Nil	Nil	Commencing from chainage 218·150 and terminating in chainage 219·120.	North—By plot Nos. 17, 18 and 19 of village Kanupara *alias* Chak Kanupara, J.L No.56(old)/ 52(new). East—By railway relinquished land. South—By plot Nos. 46, 47, 48 and 50 of village Kanupara *alias* Chak Kanupara. West—By plot Nos. 19, 33, 34, 35, 36, 41, 42, 43 and 50 of village Kanupara *alias* Chak Kanupara.
						Lot. No. 2.			
2	Do. ..	Pargana Rukunpur (according to Government order No. 1717R., dated 9th July 1935, P. W.D. Railway Branch), village Ramrampur in mauza Kuli, J. L. No. 23 (old)/ 58 (new), thana Shamshergani, pargana Farakkabad according to jurisdiction list.	87-88	Ditto ..	Total area of 6·21 acres comprising cadastral survey plot— Nos. Acres. 932 with an are of 1·60 933 ,, ,, 0·45 934 ,, ,, 1·08 935 ,, ,, 2·50 949 ,, ,, 0·58 Total .. 6·21	Nil	Nil	Commencing from chainage 218·200 and terminating in chainage 218·070.	North—By plot Nos. 931 and 930 of mauza Kuli, J. L. No. 23 (old)/ 58 (new). East—By plot Nos. 929, 936, 942, 943, 944 and 930 of mauza Kuli. South—By plot Nos 950, 948, 945 and 944 of mauza Kuli. West—By railway relinquished land.

L. G. DURNO, Collector.

Berhampore, the 8th September 1936.

Advertisement of sale.

NOTICE is hereby given that the undermentioned plots of land, no longer required by Government, situated along the Eastern Bengal Railway in the district of Rajshahi will be put up to sale at 1 o'clock on the 10th November 1936 corresponding with the 24th Kartik, 1343 Fasli, at Abdulpur Railway Station.

The purchasers of the several plots of land will be subject to the following conditions :—

1st.—The purchasers will have no power to make any excavations on the land nearer than fifteen feet from the railway boundary or to plough the land nearer than three feet from the same.

2nd.—If the amount of purchase money does not exceed Rs. 100, the whole amount must be paid down at once.

3rd.—If the amount of purchase money exceeds Rs. 100, one fourth of the amount must be immediately deposited. If the balance be not paid by noon of the fifteenth day after the sale, reckoning the day of sale as one, or if that day be a close holiday, then by noon of the first succeeding office day, the sale shall be cancelled, the sum deposited being forfeited to Government and the lot again put up for sale at the risk of the defaulting purchaser, after issue of advertisement, as in the case of original sale.

4th.—The plots of land will be sold subject to an annual assessment of Rs. 103-15 which will be subject to revision at the next general settlement of the temporarily-settled estates of the district to the highest bidders.

5th.—The sale will become final on receipt by the Collector of the orders of the Commissioner, Rajshahi Division, confirming it and a regular conveyance will then be granted to the purchaser.

Consecutive lot number.	Name of district.	Pargana and mauza.	Number of mile on which land is situated.	Situated on which side of the railway.	Approximate area of lot in acres and decimals	Land excluded from sale from each lot.		Commencement and termination of lot.	Boundary of lot.
						Reasons for exclusion.	Acres and decimals.		
1	2	3	4	5	6	7		8	9
1	Rajshahi ..	Pargana Laskarpur, mauza Sobh.	15	West side	3·50	..	..	..	North—By lands of temporarily-settled private estate No. 2496, mauza Sobh. East—By railway land. South—By the bund. West—By lands of Gadadhar Sarkar of Sobh, Mokshoda Dasya of Budrampur and Rameswar Sarkar of Agorepur.
2	Do. ..	Ditto ..	15	East side	5·17	..	..	..	North—By a road. East—By a Dahar and lands of Ali Pramanik, Dharjamoyee Dassya, Pulin Mandal and Dumil Pramanik of Sobh. South—By the bund. West—By the railway lands.
3	Do. ..	Pargana Laskarpur, mauzas Lakshanhati and Maria Araji, pargana Malanchi, mauza Ghorlash *alias* Khalial.	15	West side	7·45	..	..	..	North—By lands of mauzas Lakshanhati and Ghorlash East—By railway lands. South—By lands of mauza Maria Araji. West—By lands of mauzas Maria Araji and Ghorlash.
4	Do. ..	Pargana Laskarpur, mauzas Lakshanhati and Muradpur	15	East side	38·06	..	..	..	North—By lands of Erfan Pramanik, Ali Pramanik, Shefat Pramanik and others and District Board Road. East—By a Dahar. South—By the river Baral. West—By the railway lands.
5	Do. ..	Pargana Laskarpur, mauza Muradpur.	15	Do. ..	15·09	..	..	..	North—By the lands of Esmail Mandal of Porabaria, Madhu Pramanik of Lakshanhati and others. East—By the lands of Kanto Mandal, Mirjan Mandal of Lakshanhati and others. South—By District Board Road. West—By a drain.

B. K. Das, *for* Collector.

Rajshahi, the 5th September 1936.

Notice.

SUIT No. 1566 OF 1936.

Jyotish Chandra Singha

versus

Upendra Nath Singha.

PUBLIC is hereby informed that Jyotish Chandra Singha of No. 58, Clive Street, Calcutta, has on the 24th August 1936, instituted the above suit in the High Court of Judicature at Fort William in Bengal against his partner Upendra Nath Singha, the defendant abovenamed, for dissolution of partnership business carried on under the name and style of "Jyotish Chandra Upendra Nath Singha" at No. 58, Clive Street, Calcutta, for accounts and for other reliefs. The said suit is now pending.

Notice is hereby also given that by an ad-interim injunction order made by the said Hon'ble Court on the said 24th August 1936 the said Upendra Nath Singha, his servants and agents have been inter alia restrained from realising any outstandings of the said partnership and/or borrowing any money in the name of the said partnership and/or dealing with in any manner with the trade mark "Singha" and patent and design rights in respect of cast handles cast with cast iron rice bowls (karais) and cast iron fish-net bullets.

Public is also hereby informed that Siba Prosad Mukherjee, Ashutosh Singha, Panchu Gopal Singha and Brojo Nath Bhattacharjee, who were employees of the said firm, have left their services and are no longer employees, representatives or agents of the said firm. Any body paying any sum due to the firm and/or advancing any sum of money to the said Upendra Nath Singha or to the abovenamed ex-employees, believing that he is making such payment or advancing such sum to them on behalf of the said firm will do so at his own risk and the firm will not be held liable for such payments or advances.

A. P. BOSE, Attorney-at-Law,

Attorney for Jyotish Chandra Singha.

4, Hastings Street, Calcutta.

The 8th September 1936. (1900—1)

NOTIFICATION OF SALE.

In the Court of the Sub-Judge, Nadia.

MONEY EXECUTION CASE No. 83 OF 1936.

Badrinarayan Chetlangia, a ward of Court, represented by his next friend manager Birendra Lal Ray of the Chetlangia Ward Estate, decree-holder,

versus

Babu Shibendra Nath Sinha Ray, judgment-debtor.

Date fixed for sale is 17th November 1936.

THE entire zemindary interest including lands, waterways and tenantry in the tauzi No. 371 described in separate accounts as 371/1, 371/3, 371/5 in which the judgment-debtor's share is 12as. 17 gandas 3 karas 1 kranti 8 tils, situated within the jurisdiction of thana Nakashipara, Registration office Krishnagar in the pargana of Bagoan, under the Nadia Collectorate, district Nadia, and for which separate accounts Rs. 4,925-13-6p. are to be paid as Government revenue and for which the terms of sale are now settled at Rs. 32,000 only.

[ILLEGIBLE], Sub-Judge.

Krishnagar, the 8th September 1936. (1886—1)

In the Court of the Sub-Judge at Jessore.

MORTGAGE EXECUTION CASE No. 18 OF 1936

Registered Jessore United Bank, Ltd., decree-holder.

versus

Babu Sakti Nath Roy Choudhury and others of Satkhira, Khulna, judgment-debtors.

THE following immovable properties of the judgment-debtors will be sold at auction sale at 12 noon on the 5th day of October 1936 by the Nazir of the Court in the abovementioned execution case for realisation of the decretal amount and costs amounting to Rs. 1,07,374-14-3 under the Mortgage Decree No. 34 of 1932 of the Subordinate Judge's Court, Jessore:—

Schedule of the property.

1. Whatever right, title and interest the judgment-debtors have in sixteen annas share in tauzi No. 132/2 of Khulna Collectorate, mahal dihi Bhadra, pargana Buran, within the district of Khulna, bearing an annual revenue of Rs. 3,138-14-4.

D. K. MUKERJI, Sub-Judge.

Jessore, the 8th September 1936. (1909—1)

In the High Court of Judicature at Fort William in Bengal, in Insolvency.

NOTICE OF ADJUDICATION ORDER.

No. 127 of 1936.

Re (Mrs.) Lilith Blanche Roach, residing at No. 2, Hartford Lane, in the town of Calcutta, of no occupation, ex parte the debtor.

B. P. Bhattacharyya, debtor's solicitor.

ON the 5th day of September 1936 an order was made by the High Court of Judicature at Fort William in Bengal in its insolvency jurisdiction adjudging the abovenamed as an insolvent.

Note.—All debts due to the estate should be paid to me.

Dated this 8th day of September 1936.

G. M. FALKNER, Official Assignee.

In the High Court of Judicature at Fort William in Bengal, in Insolvency.

NOTICE OF ADJUDICATION ORDER.

No. 128 of 1936.

Re Gajadhar Shah, residing and carrying on business as a dealer in pulse and dal at No. 96/1, Ahiretolla Street, in the town of Calcutta, under the name and style of Matru Shah Gajadhar Shah and also as "Matru Gajadhar Shah", ex parte the debtor in person.

ON the 8th day of September 1936 an order was made by the High Court of Judicature at Fort William in Bengal in its insolvency jurisdiction adjudging the abovenamed as an insolvent.

Note.—All debts due to the estate should be paid to me.

Dated this 10th day of September 1936.

G. M. FALKNER, Official Assignee.

In the Court of the Sub-Judge at Asansol.

Section 19 (2) of the Provincial Insolvency Act.

INSOLVENCY CASE No. 25 OF 1936.

NOTICE is hereby given to his creditors that the insolvency petition filed by W. D. Steventon, Driver, E. I. Railway, Asansol, has been admitted and the 25th September 1936 has been fixed for hearing thereof.

K. BANARJI, Sub-Judge.

Asansol, the 7th September 1936. (1893—1)

In the Court of the Sub-Judge at Asansol.

Section 41 (1) of the Provincial Insolvency Act.

INSOLVENCY CASE No. 15 OF 1935.

J. M. Cullen of Asansol, insolvent.

TAKE notice that the petition for discharge filed by the aforesaid insolvent has been admitted and that the Court has fixed 25th September 1936 as the date for the hearing thereof.

K. BANARJI, Sub-Judge.

Asansol, the 7th September 1936. (1894—1)

In the Court of the Sub-Judge at Asansol.

Section 19 of the Provincial Insolvency Act.

INSOLVENCY CASE No. 34 OF 1936.

Shaikh Khoda Baksh of Kulti, petitioner.

TAKE notice that the insolvency petition filed by the aforesaid petitioner has been admitted and that the Court has fixed 9th October 1936 for hearing thereof.

K. BANARJI, Sub-Judge.

Asansol, the 7th September 1936. (1895—1)

In the Court of the Sub-Judge at Asansol.

INSOLVENCY CASE No. 19 of 1936.

Charles William Freeman of Kulti, petitioner.

TAKE notice that the petitioner aforesaid has been adjudged an insolvent on 14th August 1936 and that he has been directed to apply for his discharge within one year from the said date.

K. BANARJI, Sub-Judge.

Asansol, the 7th September 1936. (1896—1)

In the Court of the Sub-Judge at Asansol.

INSOLVENCY CASE No. 34 OF 1935.

Md. Hoyat of Asansol, petitioner.

TAKE notice that the aforesaid insolvent has filed an application on 22nd August 1936 for final discharge, and that the Court has fixed 25th September 1936 for hearing thereof.

K. BANARJI, Sub-Judge.

Asansol, the 7th September 1936. (1897—1)

In the Court of the District Judge of Bakarganj.

INSOLVENCY CASE No. 11 OF 1936.

NOTICE is hereby given that the firm Kunja Behari Pal, Raj Mohan Majumdar, Radhika Lal Pal of Maharajganj Bandar, police-station Jhalakati, creditor-petitioners, have applied under section 9 of the Provincial Insolvency Act to adjudicate Brojendra Lal Kunda, Rajendra Lal Kunda, Kusha Lal Kunda and Satish Chandra Kunda, sons of late Lal Behari Kunda, of Darppara Gharishar, police-station Nuria, district Faridpur, at present carrying on joint business in the name and style Brojendra Lal Kunda and Brothers at Daunatala, police station Bamna, district Bakarganj, the debtors, and that the 19th September 1936 has been fixed for hearing the petition.

A. N. SEN, District Judge.

Barisal, the 8th September 1936. (1885—1)

In the Court of the District Judge of Bankura.

NOTICE is hereby given, under clause (2) of section 19 of the Provincial Insolvency Act, V of 1920, to his creditors that the insolvency petition of Sarat Chandra Ganguli of Narayanpur, police-station Kotulpur, chowki Vishnupur, district Bankura, has been admitted as No. 5 of 1936, and that 5th October 1936 has been fixed for hearing thereof.

S. K. GANGULI, District Judge.

Bankura, the 9th September 1936. (1891—1)

In the Court of the District Judge of Bankura.

INSOLVENCY CASE No. 2 OF 1936.

Ramgoti Das, son of late Sitaram Das, of Patrasayar, police-station Patrasayar, district Bankura.

NOTICE is hereby given to his creditors that the abovenamed petitioner has been adjudged insolvent by order of this Court, dated the 22nd August 1936, and he has been directed to apply for final discharge within six months.

S. K. GANGULI, District Judge.

Bankura, the 10th September 1936. (1892—1)

ORDER OF ADJUDICATION.

Section 27 of the Provincial Insolvency Act, V of 1920.

In the Court of the District Judge at Chittagong.

INSOLVENCY APPLICATION No. 22 OF 1936.

PURSUANT to a petition, dated 26th June 1936, filed by debtors (1) Durga Prasad Roy and (2) Kali Prasad Roy, sons of late Uma Charan Roy, of village Noapara, police station Rouzan, district Chittagong, and on the application of the debtors themselves and on reading their application and hearing pleader, it is ordered that the debtors be and the said debtors are hereby adjudged insolvents.

It is further ordered that the debtors do apply for their discharge before 5th March 1937, the petition will be heard on 5th April 1937. Nazir is appointed Receiver.

Dated this 5th day of September 1936.

H. G. WAIGHT, District Judge.

(1890—1)

NOTICE TO CREDITORS OF THE DATE OF HEARING OF AN INSOLVENCY PETITION.

Section 19 of the Provincial Insolvency Act, V of 1920.

In the Court of the District Judge at Chittagong.

INSOLVENCY APPLICATION No. 31 OF 1936.

WHEREAS debtor Nazir Ahmed Choudhury, son of Late Thandamoni Choudhury, of North Kattali, police station Double Mooring, district Chittagong, has applied to this Court by a petition, dated 21st day of August 1936, to be declared an insolvent under the Provincial Insolvency Act, V of 1920, this is to give notice that the Court has fixed the 6th day of October 1936 for the hearing of the aforesaid petition and the examination of the debtor.

H. G. WAIGHT, District Judge.

Chittagong, the 10th September 1936. (1873—1)

In the Court of the District Judge of Dinajpur.

INSOLVENCY CASE No. 21 OF 1936.

Dedraj Agarwala, creditor-petitioner.

(1) CHIMAN LAL AGARWALA, son of Kanaiya Lal Agarwala, (2) Hiralal Agarwala, son of Chiman Lal Agarwala, both of Setabganj, police station Bochaganj, district Dinajpur, were adjudged insolvent on the 13th day of August 1936 and have been directed to apply for final discharge by the 12th February 1937.

The Nazir of my Court is appointed Receiver.

[ILLEGIBLE], for District Judge.

Dinajpur, the 11th September 1936. (1901—1)

In the Court of the Addl. District Judge at Howrah.

INSOLVENCY CASE No. 96 OF 1936.

NOTICE is hereby given that creditor firm Messrs. Jethmul Bhimraj has applied to this Court to adjudicate the debtor Radha Kissen Kaiya of Lillooah, district Howrah, an insolvent. The application has been admitted by this Court and the 18th September 1936 has been fixed for hearing thereof.

S. N. GUHA RAY, Addl. District Judge.

Howrah, the 7th September 1936. (1881—1)

In the Court of the District Judge of Hooghly.

INSOLVENCY PETITION No. 9 OF 1936.

NOTICE is hereby given that Makham Lal Tewari of Chinsura, thana Chinsura, district Hooghly, was on the 5th September 1936 adjudged an insolvent. The 25th November 1936 has been fixed for framing a schedule and creditors are required to prove their claims on that day.

[ILLEGIBLE], for District Judge.

Chinsura, the 7th September 1936. (1887—1)

In the Court of the District Judge of Hooghly.

NOTICE is hereby given, under clause (2) of section 12 of the Provincial Insolvency Act, V of 1920, to his creditors that the insolvency petition of Manindra Nath Rakshit, son of late Paresh Nath Rakshit, of Fulakash, thana Jangipara, district Hooghly, has been admitted by this Court as No. 67 of 1936, and that the 3rd October 1936 has been fixed for the hearing thereof.

[ILLEGIBLE], for District Judge.

Chinsura, the 7th September 1936. (1888—1)

In the Court of the District Judge of Hooghly.

INSOLVENCY PETITION No. 44 OF 1936.

NOTICE is hereby given that Sheikh Sadu alias Sadekali, son of late Sheikh Achaladdin, of Subalorah, thana Chanditala, district Hooghly, was on the 10th day of September 1936 adjudged an insolvent. The 9th day of December 1936 has been fixed for framing a schedule and creditors are required to prove their claims on that day.

[ILLEGIBLE], Addl. District Judge.

Chinsura, the 11th September 1936. (1910—1)

In the Court of the District Judge of Hooghly.

INSOLVENCY PETITION No. 49 OF 1936.

NOTICE is hereby given that Satya Charan Sarker, son of late Tarak Nath Sarker, of Serampur, thana Serampur, district Hooghly, was on the 10th day of September 1936 adjudged an insolvent. The 9th day of December 1936 has been fixed for framing a schedule and creditors are required to prove their claims on that day.

[ILLEGIBLE], Addl. District Judge.

Chinsura, the 11th September 1936. (1911—1)

In the Court of the District Judge of Hooghly.

INSOLVENCY PETITION No. 40 OF 1936.

NOTICE is hereby given that Sarat Chandra Sadhukhan, son of late Sasi Bhusan Sadhukhan, of Senpur, thana Khanakul, district Hooghly, was on the 10th day of September 1936 adjudged an insolvent. The 9th day of December 1936 has been fixed for framing a schedule and creditors are required to prove their claims on that day.

[ILLEGIBLE], Addl. District Judge.

Chinsura, the 11th September 1936. (1912—1)

In the Court of the District Judge of Hooghly.

NOTICE is hereby given, under clause (2) of section 12 of the Provincial Insolvency Act, V of 1920, to his creditors that the insolvency petition of Gajab Narayan Tewari, son of late Ramdas Tewari, of Serampur, thana Serampur, district Hooghly, has been admitted by this Court as No. 72 of 1936, and that the 10th October 1936 has been fixed for the hearing thereof.

[ILLEGIBLE], for District Judge.

Chinsura, the 5th September 1936. (1889—1)

In the Court of the District Judge of Jalpaiguri.

INSOLVENCY CASE No. 14 OF 1935.

Lokendra Nath Bagchi of Jalpaiguri town, insolvent.

TAKE notice that the aforesaid insolvent has filed an application for discharge, and that the Court has fixed 30th September 1936 for hearing thereof.

S. C. GHOSE, Registrar, for District Judge.

Jalpaiguri, the 7th September 1936. (1884—1)

ORDER ANNULLING ADJUDICATION.

In the Court of the District Judge of Midnapore.

INSOLVENCY CASE No. 26 OF 1935.

Tulsiram Manna, son of late Babu Charan Manna, of Barkalicharanpur, pargana Gumgarh, thana Nandigram, district Midnapore, petitioner.

WHEREAS the abovenamed petitioner was adjudicated an insolvent by order of the Court dated 13th July 1935 and was directed to deposit costs of publication of his discharge application and it appears to the Court that the insolvent has not deposited the costs.

It is ordered that the order of adjudication dated 13th July 1935 against the abovenamed petitioner be and the same is hereby annulled.

Dated this 8th day of September 1936.

S. K. HALDAR, District Judge.

In the Court of the District Judge of Rangpur.

INSOLVENCY CASE No. 41 OF 1935.

ON the application of the debtor Hriday Nath Kundu, son of late Pran Nath Kundu, of Saidpur Koya, police-station Saidpur, in Rangpur, for being finally discharged, the 28th day of September 1936 has been fixed for hearing the aforesaid petition and the examination of the debtor.

P. C. DE, District Judge.

Rangpur, the 9th September 1936. (1883—1)

In the Court of the District Judge of 24-Parganas.

INSOLVENCY CASE No. 31 OF 1936.

Guljarilal Patwari of Khardah Bazar, police-station Khardah, 24-Parganas, applicant.

To Bhopaldas Bhagawandas of Pasta, Joypore Estate, Rajputana, and others, creditors.

ON the 4th day of September 1936 it was ordered that the matter of the petition of the applicant be heard on the 5th day of October 1936, and that the said applicant do attend to be examined by this Court on that date.

T. H. ELLIS, District Judge.

Alipore, the 8th September 1936. (1882—1)

MR. DWIJENDRA KUMAR BOSE, B.L., intends to be enrolled as an Advocate of the High Court.

(1759—4)

MR. ROHINI KANTO GHOSE, M.A., B.L., intends to be enrolled as an Advocate of the High Court.

(1820—4)

MR. AMULYA CHARAN NASKER, B.L., intends to be enrolled as an Advocate, High Court.

(1740—4)

APPLICATIONS are invited for the post of Assistant Director, Civil Veterinary Department, in the Bengal Lower Veterinary Service, on the scale of Rs. 150—25—200—25/2—300—50/2—650 (probationary period of two years and efficiency bar after the 18th stage) from Muhammadan candidates who possess the M.R.C.V.S. diploma or the diploma of a recognised Veterinary College. Full particulars and instructions regarding the appointment are published in Part I of the Calcutta Gazette, dated the 3rd September 1936, under the Agriculture and Industries Department notification No. 5737 Vety., dated the 31st August 1936.

H. S. E. STEVENS,

Secy. to the Govt. of Bengal,

Agriculture and Industries Department.

Public Service Commission (India).

APPLICATIONS are invited for a post of District Medical Officer for State-managed Railways in India to be recruited under the regulations contained in notification No. E.36 R.C.12, dated 3rd September 1936, published in the Gazette of India, dated 5th September 1936. (2) Candidates must be domiciled in India and must have qualifications registrable under the Medical Acts in force in Great Britain and Northern Ireland, or have a medical degree of a British Indian University. (3) Government servants eligible to apply if permitted by their departments. (4) Canvassing, in any form, will disqualify a candidate. (5) Last date for receipt of applications 5th October 1936. Prescribed application forms and further particulars may be obtained from the Secretary, Public Service Commission, Simla. Applicants for forms must mention the name of the post.

Simla, the 3rd September 1936. (1898—1)

IT is hereby notified for general information that the next ordinary examination of candidates for Certificates of Competency as Masters and Serangs of Inland Steam Vessels under Act I of 1917, will be held at the Port Office, Chittagong, on Tuesdays, the 13th October, 17th November and 22nd December 1936, at 10-30 a.m.

Applications for examination for any of the above grade certificates must be made at the Port Office, Chittagong, not later than three days prior to the date of examination, the candidates producing their certificates and testimonials and paying the fees.

F. W. ANGELL, Commander, R. I. N.,

Nautical Surveyor, Chittagong.

Chittagong, the 9th September 1936.

THE Bengal and Madras Service Family Pension Fund which is provisionally managed and assisted by Government has for its object the provision of monthly pensions for the maintenance of the widows and children of subscribers and is open, with certain exceptions, to all active and pensioned members of the Uncovenanted service of Government (except those serving under the Government of Bombay), and to Local Fund servants earning pensions from Government. Some of the special features of the fund are (1) that widowed daughters incapable of re-marriage or children labouring under such mental or bodily infirmities as incapacitate them from earning their livelihood or preclude the possibility of marriage (in case of a daughter) are admitted to its benefits; and (2) that subscribers to the Widows and Daughters' branches are entitled to a refund of 30 per cent. of the premia paid, should the nominee predecease them after five years of admission. The second quinquennial valuation of the Fund has been completed by the Actuary to the Government of India, and his report discloses very favourable results. For forms of application and rules of the Fund apply to the Accountant-General, Bengal, Imperial Secretariat Buildings, Calcutta.

TENDERS are invited for binding the records-of-rights of Midnapore Settlement. Samples may be seen in the office of the undersigned at 35, Gopalnagar Road, Alipore, on office days between 11 a.m. to 5 p.m., and tenders submitted in sealed covers so as to reach the Settlement Officer positively by 24th September 1936.

S. M. HUSSAIN, Settlement Officer,

Land Revenue Settlement, Western Circle, Alipore.

SEALED tenders are invited for the supply of press materials, etc., for use in the Rangpur Settlement Press, which will be received by the undersigned up to 20th September 1936. The undersigned is not bound to accept the lowest or any tenders.

U. C. BANARJI,

for Settlement Officer, Rangpur.

Rangpur, the 29th August 1936.

Garden Reach Municipality.

THE Commissioners are of opinion that the maintenance of ambulance cars for free use in maternity cases will promote the welfare and convenience of the inhabitants of the Garden Reach Municipality within the meaning of clause (xxxvi) of sub-section 1 of the section 108 of the Bengal Municipal Act, 1932 (Bengal Act XV of 1932), and that an expenditure for this purpose is an appropriate charge on the Municipal Fund.

(1903—1)

DACCA AGRICULTURAL SCHOOL.

Central Research Station, Ramna, Dacca.

THERE are vacancies for 15 students in the above school for the course commencing on January 15, 1937. The course extends over a period of two years. Applicants for admission must submit their applications on the prescribed form on or before the 15th November 1936 to the Head Master, Dacca Agricultural School, post office Tejgaon, Dacca, who will supply forms and prospectus governing admittance.

M. CARBERY, Assistant Director of

Agriculture, Bengal.

Timber.

THE office of the Forest Utilisation Officer, Bengal, has been established at 35, Gopalnagore Road, Alipore. The undersigned will be pleased to answer any enquiries regarding Supplies, Timber Testing, Timber Seasoning, Wood Preservatives, etc.

The advice and assistance of the Timber Specialists at the Forest Research Institute, Dehra Dun, are at your disposal through my office, if you have any problems send them to me.

W. E. HODGE,
Deputy Conservator of Forests,
Forest Utilisation Officer, Bengal.

Estate Arthur Wilson, deceased.

PURSUANT to section 360 of Act XXXIX of 1925 and section 42 of Act XXVIII of 1866, the creditors and all persons interested in the estate of Arthur Wilson, late of Chartered Bank Buildings, Clive Street, Calcutta, who died at the Welsh Mission Hospital, Shillong, on the 25th day of June 1936, and Letters of Administration to whose estate were granted by the High Court, Calcutta, on the 20th day of August 1936, are hereby required to submit particulars of their claims to the undersigned on or before the 20th day of October 1936, after which date the Administrator will distribute the assets, having regard only to the claims of which notice shall then have been received.

ORR, DIGNAM & CO.,
Solicitors to the Administrator.

32, Dalhousie Square, South, Calcutta, the 11th September 1936. (1902—1)

S. C. Dey and Brothers.

IT is hereby notified to the public that our partnership with the firm S. C. Dey and Brothers carrying on business at 17, Canal West Road, Calcutta, has ceased to exist with effect from 1st Baisakh, 1343 B.S. (i.e., 14th April 1936).

BIBHUTI BHUSAN DE,
NALINAKSHYA DE.

13, Narikeldanga Main Road, Calcutta, the 14th September 1936. (1908—1)

Lost.

THE Government Promissory Notes Nos. 334432, 334433, 333268, 333672, 333496, 333497 of the 3½ per cent. loan of 1900-01 for Rs. 100, Rs. 100, Rs. 500, Rs. 1,000, Rs. 1,000, Rs. 1,000, respectively, originally standing in the name of Prosad Das Boral and Brothers, and last endorsed to Sm. Pateswari Debi, the proprietress, by whom they were never endorsed to any other person, having been lost, notice is hereby given that payment of the above notes and the interest thereupon have been stopped at the Public Debt Office, Reserve Bank of India, Calcutta, and that application is about to be made for the issue of duplicates in favour of the proprietress. The public are cautioned against purchasing or otherwise dealing with the abovementioned securities.

Name of the advertiser—Sm. Pateswari Debi.

Address—No. 15, Shibtollah Street, Uttarpara P.O., district Hooghly.

(1752—3)

Lost or Destroyed.

THE Government Promissory Notes :—

No.	Loan.	Amount.	Originally standing in the name of—	Last endorsed to—
		Rs.		
284939	3½ per cent., 1900-01.	500	The Bank of Bengal.	Rajendranauth Dey (since deceased).
256043	3½ per cent., 1865.	200	Do. ..	Do.
301560		1,000	Do. ..	Do.
296030	Do.	500	Rajendranauth Dey (since deceased).	None.

the proprietor, by whom they were never endorsed to any other person, having been lost or destroyed, notice is hereby given that payment of the above notes and the interest thereupon have been stopped at the Public Debt Office, Reserve Bank of India, Calcutta, and that application is about to be made for the issue of duplicates in favour of Sm. Hari Dassi Dassi. The public are cautioned against purchasing or otherwise dealing with the abovementioned securities.

Name of the advertiser—Biswa Nath Bhattacharyya.
Address—16, Sarkar Lane, Calcutta.

(1870—3)

IN THE HIGH COURT OF JUDICATURE AT FORT WILLIAM IN BENGAL.

In the matter of the Indian Companies Act, VII of 1913,

and

In the matter of the Bazaloni Tea Company, Limited.

NOTICE is hereby given that by an order, dated the 17th day of August 1936, made by the Honourable Mr. Justice Panckridge, the Court has directed a meeting of the holders of the First Debentures of the abovenamed Company to be convened for the purpose of considering and, if thought fit, approving with or without modification a Scheme of arrangement proposed to be made between the said Company and its members and the Debenture-holders of the said Company, such meeting to be held on Monday, the 28th day of September 1936, at No. 14, Old Court House Street, in the town of Calcutta, the registered office of the said Company, at 4-10 o'clock in the afternoon, on which date and at which place and time all the said holders of the said First Debentures of the abovenamed Company are requested to attend.

A copy of the said Scheme of arrangement and of the draft Trust Deed mentioned in paragraph 4 of the said Scheme may be inspected at the said registered office on any week days (excepting Saturday) between the hours of 11 o'clock in the forenoon and 4 o'clock in the afternoon, and on Saturday between the hours of 10 o'clock in the forenoon and 1 o'clock in the afternoon.

Such copies will also be available for inspection at the said meeting.

Debenture-holders are reminded that only the actual bearers of the First Debentures of the Company may attend and vote at such meeting and that they must bring with them the Debentures in respect of which they propose to vote.

The Court has appointed Mr. James McFarlane of No. 14, Old Court House Street in Calcutta, or failing him Mr. Hugh Carey Morgan of No. 26, Dalhousie Square in Calcutta, to act as Chairman of the said meeting, and has directed such Chairman to report the result of the said meeting to the Court. The abovementioned Scheme will be subject to the subsequent approval of the Court.

Dated this 9th day of September 1936.

OCTAVIUS STEEL & CO., LTD.,
Managing Agents.

(1878—1)

IN THE HIGH COURT OF JUDICATURE AT FORT WILLIAM IN BENGAL.

In the matter of the Indian Companies Act, VII of 1913,

and

In the matter of the Bazaloni Tea Company, Limited.

NOTICE is hereby given that by an order, dated the 17th day of August 1936, made by the Honourable Mr. Justice Panckridge, the Court has directed a meeting of the holders of the Second Debentures of the abovenamed Company to be convened for the purpose of considering and, if thought fit, approving with or without modification a Scheme of arrangement proposed to be made between the said Company and its members and the Debenture-holders of the said Company, such meeting to be held on Monday, the 28th day of September 1936, at No. 14, Old Court House Street, in the town of Calcutta, the registered office of the said Company, at 4-30 o'clock in the afternoon, on which date and at which place and time all the said holders of the said Second Debentures of the abovenamed Company are requested to attend.

A copy of the said Scheme of arrangement and of the draft Trust Deed mentioned in paragraph 4 of the said Scheme may be inspected at the said registered office on any week days (excepting Saturday) between the hours of 11 o'clock in the forenoon and 4 o'clock in the afternoon, and on Saturday between the hours of 10 o'clock in the forenoon and 1 o'clock in the afternoon.

Such copies will also be available for inspection at the said meeting.

Debenture-holders are reminded that only the actual bearers of the Second Debentures of the Company may attend and vote at such meeting and that they must bring with them the Debentures in respect of which they propose to vote.

The Court has appointed Mr. James McFarlane of No. 14, Old Court House Street in Calcutta, or failing him Mr. Hugh Carey Morgan of No. 26, Dalhousie Square in Calcutta, to act as Chairman of the said meeting, and has directed such Chairman to report the result of the said meeting to the Court. The abovementioned Scheme will be subject to the subsequent approval of the Court.

Dated this 9th day of September 1936.

OCTAVIUS STEEL & CO., LTD.,
Managing Agents.

(1879—1)

In the matter of the Indian Companies Act, 1913,

and

In the matter of Bull, Ltd. (in liquidation).

TAKE notice that, pursuant to section 217 of the Indian Companies Act, 1913, a general meeting of the members of the aforesaid Company will be held at 1B, Old Post Office Street, Calcutta, on Monday, the 12th day of October 1936, at 11 a.m., for the purpose of having the account laid before them showing the manner in which the winding up has been conducted and the property of the Company has been disposed of, and of hearing any explanation thereof that may be given by the liquidator, and also of determining by extraordinary resolution the manner in which the books, accounts and documents of the Company and of the liquidator shall be disposed of.

S. R. BATLIBOI, for Self and Co-liquidator.

1B, Old Post Office Street, Calcutta, the 7th day of September 1936. (1880—1)

In the matter of the Indian Companies Act, VII of 1913, and

In the matter of the Kalna-Konnagar Economic Sugar and Manufacturing Co., Ltd. (in liquidation).

NOTICE is hereby given that the following special resolutions were duly passed and confirmed:—

(1) Resolved that the Company be wound up voluntarily. (2) Resolved that Babu Sarat Kumar Banerjee of Konnagar (district Hooghly) be appointed liquidator on a remuneration of 10 per cent. of the realisation in the Company's assets.

SARAT KUMAR BANERJEE, Liquidator.

Upendra Nath Chatterjee Lane, Konnagar, district Hooghly, the 6th September 1936.

(1899—1)

In the matter of the Indian Companies Act, VII of 1913, and

In the matter of Press House Contractors, Ltd. (in liquidation).

PURSUANT to section 209 (1) of the Indian Companies Act, VII of 1913, a meeting of the creditors of the Company abovenamed will be held at the office of the liquidators at 12/1, Old Post Office Street, Calcutta, on Thursday, the 1st October 1936 at 12 noon.

For Ganguli Mukherji & Co., Liquidators,
A. K. MUKHERJEE, B. Com., G.D.A.R.A.,
Partner.

12/1, Old Post Office Street, Calcutta, the 12th September 1936. (1905—1)

In the matter of the Indian Companies Act, VII of 1913, and

In the matter of Press House Contractors, Ltd. (in liquidation).

NOTICE is hereby given that at an extraordinary general meeting of the Company held at the registered office on the 8th September 1936 at 12 noon resolutions were duly passed (i) putting the Company into voluntary liquidation and (ii) appointing Messrs. Ganguli Mukherji & Co. of 12/1, Old Post Office Street, Calcutta, as liquidators with all powers under the Indian Companies Act, VII of 1913.

ANIL DEB MUKHERJI, Chairman.

2, Kasinath Dutta Road, Baranagore, the 8th September 1936. (1906—1)

In the matter of the Indian Companies Act, VII of 1913,

and

In the matter of the East Nandi Coal Company, Ltd. (in liquidation).

NOTICE is hereby given to the creditors and contributories of the Company that an extraordinary meeting is to be held on Friday, the 16th October 1936, at 12 noon at "Mohta House," 29, Strand Road, 3rd floor, Calcutta, to receive the final account of winding up, showing how the winding up has been conducted and the assets disposed of and to receive an explanation from the liquidator thereof.

SANTOK CHAND LODHA,
Liquidator.

29, Strand Road, Calcutta, the 11th September 1936. (1907—1)

Imperial Library.

Secretariat Buildings, 6, Esplanade East, Calcutta.

Open on—

Week days and Saturdays from 10 a.m. to 7 p.m.
Sundays and Gazetted holidays from 2 p.m. to 5 p.m.

THE Imperial Library is also a Lending Library. It is free to all except children. There is no subscription to pay.

K. M. ASADULLAH, Librarian.

CINCHONA FACTORY PRODUCTS.

By order of the Government of Bengal Cinchona Factory Products as manufactured and packed at the Cinchona Factory, Mungpoo, Darjeeling district, will be sold and distributed by the Superintendent of the **Presidency Jail**, *in original packages* as received from the Mungpoo Factory, at the rates herein noted **from the 1st May 1926** :—

Name of drug.	Price per lb. in powder form. Taken at a time. For 60 lbs. and upwards.	For 6 lbs. and over but less than 60 lbs.	For any quantity less than 6 lbs.	Price in 5 grain tablets. 1,000 tablets.	500 tablets.	250 tablets.	Price by weight per lb.
	Rs.	Rs.	Rs.	Rs.	Rs. a.	Rs. a.	Rs.
Quinine Bisulphate ..	18	19	20	16	8 0	4 4	..
„ Hydrobromide ..	23	24	25	20	10 0	5 4	..
„ Bihydrobromide ..	26	27	28	23	11 8	6 0	..
„ Salicylate ..	24	25	26	..	..	..	..
„ Tannate ..30 per cent. 35 per cent.	14	15	16	..	..	..	14

N.B.—Packing free in tins, sizes 1 lb., 8 oz. and 4 oz. only. Packing in bottles or smaller sizes of tins extra.

Quinine Sulphate.

For 60 lbs. and upwards at a time .. Rs. 18 per lb.
For 6 lbs. and over but less than 60 lbs. at a time .. .. .. „ 19 „
For any quantity less than 6 lbs. .. „ 20 „

Totaquina.*

Irrespective of quantity .. Rs. 13-8 per lb.
For sale to hospitals and dispensaries in Bengal, Bihar, Orissa and Assam.

Quinine Hydrochloride.

For 60 lbs. and upwards at a time .. Rs. 23 per lb.
For 6 lbs. and over but less than 60 lbs. at a time .. .. .. „ 24 „
For any quantity less than 6 lbs. .. „ 25 „

Quinine Di-Hydrochloride.

For 60 lbs. and upwards at a time .. Rs. 25 per lb.
For 6 lbs. and over but less than 60 lbs. at a time .. .. .. „ 26 „
For any quantity less than 6 lbs. .. „ 27 „

Quinidine Sulphate.

For 60 lbs. and upwards at a time .. Rs. 20 per lb.
For 6 lbs. and over but less than 60 lbs. at a time .. .. .. „ 21 „
For any quantity less than 6 lbs. .. „ 22 „

Cinchonidine Sulphate.

For 60 lbs. and upwards at a time .. Rs. 25 per lb.
For 6 lbs. and over but less than 60 lbs. at a time .. .. .. „ 26 „
For any quantity less than 6 lbs. .. „ 27 „

Cinchonine Sulphate.

For 60 lbs. and upwards at a time .. Rs. 12 per lb.
For 6 lbs. and over but less than 60 lbs. at a time .. .. .. „ 13 „
For any quantity less than 6 lbs. .. „ 14 „

*Cinchona Febrifuge (Powder).

For 60 lbs. and upwards at a time .. Rs. 9 per lb.
For 6 lbs. and over but less than 60 lbs. at a time .. .. .. „ 9 „
For any quantity less than 6 lbs. .. „ 10 „

*Cinchona Febrifuge (Tablets).

For 60 lbs. and upwards at a time .. Rs. 10 per lb.
For 6 lbs. and over but less than 60 lbs. at a time .. .. .. „ 10 „
For any quantity less than 6 lbs. .. „ 11 „

Supply of Cinchona Febrifuge to all authorised indentors will be rationed in the proportion of 1½ of Cinchona Febrifuge to 1 of Quinine Sulphate at their existing prescribed prices.

Cinchona Bark (in 50 pound original bags).

Per bag .. Rs. 25.

4 grains Quinine Tablets.

Rs. a.
2 8 per box of 200 tablets (for Bengal and other provinces).
12 1 per 5 boxes—(Transit charges inclusive) for Public in Bengal.
15 8 per lb.

5 grains Quinine Tablets.

Rs. a.
15 8 per lb. sold in 1 lb., ½ lb. and ¼ lb. tins.

5 grains Quinine Hydrochloride Tablets.

Rs. a.
20 0 per 1,000 tablets.
10 0 „ 500 „
5 4 „ 250 „

Packing free in tins, sizes 1 lb., 8 oz. and 4 oz. only. Packing in bottles or smaller sizes in tins extra.

5 grains Quinine Bihydrochloride Tablets.

Rs. a.
22 0 per 1,000 tablets.
11 0 „ 500 „
6 0 „ 250 „

Packing free in tins, sizes 1 lb., 8 oz. and 4 oz. only. Packing in bottles or smaller sizes in tins extra.

Transit charges extra in every case.

***Cinchona Febrifuge** is for sale to Government and Charitable Institutions, Local Bodies and Missionaries only. **It is not for sale to Private Firms or the General Public.**

Quinine Sulphate is now open for sale to the Public at the above rates. But it will be supplied to Hospitals and Dispensaries in Bengal, Bihar, Orissa and Assam at Rs. 18 per pound irrespective of quantities.

Five and ten boxes of Quinine Tablets are sold to the public at the concession rates which will be intimated on application.

Provinces other than Bengal, Bihar, Orissa and Assam will get their supplies of Sulph. Quinine and Cinchona Febrifuge Powder and Tablets from the Director, Botanical Survey of India, Sibpur, Howrah.

Local sale at the jail gate from 10 to 12 noon.

The system of payment is by—*Cash in advance*—by "*Treasury Challans*," which should accompany the order or indent.

In cases where this is not possible, payment should be made by "*Remittance Transfer Receipts*" or crossed "*Cheques.*"

Indents unaccompanied by cash in advance will be sent Value Payable Post. Credit sale is not allowed except under special circumstances.

In the case of *Government officers* payments will be recovered by *Book Transfer, i.e., Countersigned Invoices*, in the event of *Cash* not accompanying the indent by "*Treasury Challans*," *Remittance Transfer Receipt or Cheque.*

2. Price and postage must accompany the price of the drug (when the drug is required by post).

The name of the Railway and Steamer Station or Post Office must be written distinctly when the parcels are required by Rail, Steamer or by Post. Railway parcels are sent by passenger train only.

A scale of postage is given below.

	1 oz.	2 ozs.	4 ozs.	½ lb.	¾ lb.	1 lb.
	As.	As.	As.	As.	As.	Rs. A.
Quinine Sulph. ..	..	..	7	7	11	0 11
Cinchona Feb. ..	..	..	7	7	11	0 11
Cinchona Feb. Tablets	..	..	7	7	11	0 11
Quinine Hydrochlor. ..	5	5	7	7	..	0 11
Quinine Di-hydrochlor.	5	5	7	7	..	0 11
Quinine Tablets ..	..	..	7	7	11	0 11
Totaquina ..	..	..	7	7	11	0 11

	1¼ lb.	2 lb.	3 lb.	4 lb.	5 lb.	6 lb.
	Rs. A.	Rs. A.	Rs. A.	Rs. A.	Rs. A.	Rs. A.
Quinine Sulph. ..	0 15	1 3	1 7	1 15	2 7	2 11
Cinchona Feb. ..	0 15	0 15	1 7	1 11	2 3	2 7
Cinchona Feb. Tablets	0 15	1 3	1 11	1 15	2 7	2 15
Quinine Hydrochlor. ..	0 15	1 3	1 7	1 15	2 7	2 11
Quinine Di-hydrochlor.	0 15	0 15	1 7	1 11	2 3	2 7
Quinine Tablets ..	0 15	0 15	1 7	1 11	1 15	2 3
Totaquina ..	0 15	1 3	1 7	1 15	2 7	2 11

Two different drugs are not packed in the same parcel and postage must be paid separately for each kind.

N.B.—Postage stamps are not accepted as revenue.

Government reserve the right to alter the price without notice.

The Sri Chitra Exhibition 1936

Trivandrum, Travancore.

The above Exhibition will be held in Trivandrum in connection with the celebration of the next birthday of His Highness the Maharaja of Travancore which will fall on the 12th November 1936. Arrangements will be in the hands of a large and responsible Committee composed of leading officials and non-officials and will be conducted on up-to-date lines with Government co-operation. The Exhibition will afford an opportunity for Agriculturists, Industrialists, Manufacturers, etc., to exhibit and advertise their wares.

Exhibits from all over India, whether manufactured in this country or abroad, will be welcome. Accommodation for exhibits (except machinery) will be provided in stalls $10' \times 10'$ available singly or in multiple units. Stalls of special dimensions at special rates may be had on application. Machinery exhibits will be housed in machinery sheds.

There will be a general stall for exhibiting small articles and rare specimens for the convenience of those exhibitors who do not attend in person or send their representatives; for this a minimum rent will be charged, *plus* a 10 per cent. commission on sales.

Arrangements will be made with the Railway Companies for freight concessions on exhibits.

There will be eight sections, viz., (*a*) Raw materials, (*b*) Manufactured goods, (*c*) Rural industries, (*d*) Machinery and Implements, (*e*) Education, (*f*) Public Health and Sanitation, (*g*) History and Archaeology, and (*h*) Fine Arts. These sections will be sub-divided into appropriate groups.

A detailed prospectus containing the Rules, the Ground Plan, etc., will be published shortly.

Further information can be had from:—

THE CONVENER
(Director of Industries),
Exhibition Committee,
Trivandrum.

PUBLICATIONS of the Bengal Government are available for sale to the public at Bengal Government Press, Alipore, and Sales Office, ground floor, Writers' Buildings, Calcutta.

Advertisements for Calcutta Gazette, Civil List, Indian Law Reports (Calcutta Series) are accepted at both offices.

Catalogues free on application.

Registered No. C207

No. 38 of 1936

The Calcutta Gazette

THURSDAY, SEPTEMBER 17, 1936.

CONTENTS:

	Page.
Annual Report of the Royal Botanic Garden and the Gardens in Calcutta and of the Lloyd Botanic Garden, Darjeeling, for 1935-36	1225—1233
Statements of weekly gauge-readings on certain rivers in Bengal	1234—1235 & 1241
Monthly Weather and Crop Report of Bengal for August 1936	1236
Weather and Crop Report for the week ending 9th September 1936 ..	1237—1240
Corporation of Calcutta Notices ..	1241
Vital Statistics of towns of Bengal for the week ending 5th September 1936 ..	1242
Abstract statement showing the approximate volume of traffic and the tollage on canals in Bengal classed as Major and Minor Works and Navigation for the month of July 1936	1243
Statements under the Cotton Ginning and Pressing Factories Act, 1925 .	1244
Liberality of Maulvi Haji Miyan Khan Sawdagar, a Commissioner of the Chittagong Municipality	1244
Resolution on the Annual Report of the Department of Agriculture, Bengal, for the year 1935-36	1245—1248

SUPPLEMENT.

Official Papers.

Annual Report of the Royal Botanic Garden and the Gardens in Calcutta and of the Lloyd Botanic Garden, Darjeeling, for 1935-36.

Royal Botanic Garden.

1. **General.**—The art of gardening amongst the general public of Calcutta is coming into its own. No one who has a faculty of observation developed to any degree and who remembers gardening of 15 or 20 years ago can fail to be impressed by the immense improvement that has taken place in the appearance of Calcutta Gardens and in the variety of flowers now generally cultivated here. The interest has become general; it is no longer confined to a class; it has caught on.

The excuse made in an examination paper a quarter of a century ago by a Calcutta student will no longer gain the minimum pass marks. The fern was a plant that grew in the rich man's garden, he said, and how, therefore, could he be expected to outline its life history. Necessity is the mother of invention and ingenuity is always worthy its due, but the patent of 1914 has run out with the variety and profusion of all kinds of plant now grown in the poor man's garden.

To the Indian a love of flowers is natural. He has a long history of interest in gardening to his credit. The plants with which he lives have been taken by him to many of his religious rites and institutions. They are part of his history, and there are crops of them scattered throughout his mythology. But it is increase in his garden variety and profusion that is noticeable of later years, and if we try to seek reasons for this they may be found in the increased opportunity he has through the services of horticultural firms and societies and in the facilities that now offer for the rapid introduction of varieties that are gaining a place in gardens throughout the world.

From the scientific side of the horticultural effort he benefits by the breeding and crossing experiments going on from which a variety of forms hitherto unknown and unsuspected have come to supplement the stocks he formerly had at his disposal.

The average gardens of Calcutta some 20 years ago might have contained all or some of the following:—

Phlox, Verbena, Dianthus, Pansy, Carnations, Nasturtium, Cosmos, Salvia, Sweet Peas, Balsams, Zinnias, Gomphrena, Browallia, Gaillardia, Coreopsis, Hollyhocks, Cannas and Sunflowers. To-day these are all there, but besides the immense improvement in the kinds of them grown we should find now in plenty though formerly rare Dahlias, Double Nasturtiums, Delphiniums, Gladiolus, Stocks, Clarkia, Gypsophila, Eschscholtzia, Statice, Ageratum, Anchusa, Aster, and a host of others. Perhaps the most marked change is in the variety and profusion of Dahlias and Cannas now grown. The Royal Agri-horticultural Society is able to take credit for not a little of the improvement that has taken place in the Canna section.

To say that the variety has been trebled in the last two decades is a conservative estimate and to recognise the enormous improvement effected is a merited compliment to the widespread interest now taken in matters horticultural.

The Royal Botanic Garden has taken its full share in the advance made in the purely horticultural side of its activities. Every year sees a new effort made to test and establish plants not formerly tried, while the standard of production accomplished bears creditable comparison with the effort of lesser known institutions. The exhibits that the Curator has this year put up at horticultural shows have more than held their own in the opinion of the most competent judges. The exhibits were not specially prepared for shows and in quality were fairly representative of the general stocks in cultivation at the gardens.

Improvements effected in the garden during the year range over all sections of its activities; but the progress made towards inclusion of economic plants, especially those of interest to the fruit culturist, deserves special mention. Of recent years the mango has been receiving more than a usual share of attention. Modern methods of transport in cold storage or under other conditions that inhibit the growth of decay organisms have drawn attention to its possibilities in foreign markets. Exhibitions devoted exclusively to the mango, a new departure, are even being organised. The garden was unnecessarily poor in good stock of this tree and additions during the year of 140 mango grafts of good variety were planted out to make good the deficiency. It is unlikely that they will all do equally well but a wider range of material is now here from which in time selections may be made and stock distributed.

Other fruit bearing species will be added till a more just balance in the garden of plants of the purely scientific and economic kind is reached.

The rock garden to which reference was made in recent annual reports has been extended and the following plants added to it :—

Macleaya yedoensis, Taxus baccata, Erigeron canadensis, Thermopsis fabacea. Chrysanthemum coccineum, Fragaria indica, Lobelia syphilitica, Chrysanthemum parthenium, Rosa flexuosa, Robinia hispida, Lupinus polyphyllus, Cercis Siliquastrum, Sophora Sp., Mirabilis Froebelii, Isatis tinctoria, Lotus corniculatus, Senecio clivorum, Cichorium Intybus, Talinum crasiifolium, Gerbera Jamesoni, Lupinus perennis.

The Curator reports that the year was not very favourable for planting out operations, but the increased importance given to the inclusion of species new to or rare in the garden has not been forgotten. His record of additions includes :—*Clematis integrifolia. Moringa oleifera, Cordia tremula, Dalbergia paniculata, Melia sempervirens, Bauhinia retusa, Pistacia chinensis. Dalbergia hupeana, Clerodendron trichotomum, Peltophorum africanum, Balanites aegyptiaca, Cryptostegia madagascariensis, Sideroxylon dulcificum, Ochna mossambicensis, Aristolochia, altissima, Callitris quadrivalvis, Acacia mollifera, Guazuma ulmifolia, Psidium pumilum, Bauhinia putchella, Schinus dependens, Ficus colinifolia, Araucaria brasiliensis, Casuarina lepidophloia, Pavetta indica, Diospyros hulesioides, Acacia spadicigera, Clerodendron tuberculatum, Acacia Richii, Ischira rosea, Garcinia tinctoria, Rheedia sp., Bauhinia scarlet, Tecoma argentea, Calophyllum antillerum.*

The short rainfall, itself, combined with the reduced normal period of fall affected not a few garden plants in the open, and numbers especially in the riverways entrance to the garden, the Oreodoxa Avenue, had to be removed. This Avenue, so well-known to garden visitors, is now losing its former beauty. Every year one or more members of its stately palm disappear. It is already beginning to look ragged and it must be years before the line of replacements effected some five years ago grows up to allow of a mass removal of the old trees. With the palmyra replacement is easier, for this palm grows so much more quickly that within ten years gaps are nearly filled and the symmetry of its avenues is regained.

In addition to the routine work of the garden the Orchid House has been repaired and a special effort made to make good the damage done to garden labels. This last work is going on apace, but replacement will henceforth have to be viewed as routine work, for time alone and the weather is not responsible for the deterioration in lables that takes place. One would think that a label bearing a Latin name with the name of the family to which a tree belongs and its geographical distribution could excite resentment from no quarter, but the manner in which labels get bent and broken belies the assumption. The damage must be the work of a few malcontents, for the great masses of garden visitors of all classes are orderly and appreciative of what is done for them.

No major work could be undertaken during the year, but a few coolie houses have been partially erected near the economic ground so that some garden labour may live nearby and be able to keep an eye on plant products that excite more than a legitimate interest.

A lotus bowl for experimental work on water plants in the open has been dug near the flower garden and new beds of roses planted up. The garden is now very much richer in the rose class than it formerly was but as with the orchids, rose stock has continually to be introduced. It deteriorates and not all kinds do equally well. Some only just survive. As has been pointed out before the climate of Calcutta is not well suited to this class of plant: Some of our stock has come from abroad but the garden can now depend for regular supplies on the finely stocked gardens of Upper India where the conditions suit it so much better than in Bengal.

As in recent years large numbers of potted plants have been staged out at vantage points throughout the garden.

Experiments on the pollination of Amherstia have been repeated with encouraging results. Some of the seed has gone to Kew where success with the germination of last year's small supply had not been obtained. This tree is in great demand by horticultural institutions throughout the world. Although there is no great difficulty in establishing rooted cuttings of it, the expenses of transporting these in wardian cases militate against its wider distribution. Fertile seed is rarely found, the production of racemes of pendulous flowers, quaint, orchid like and highly specialised seeming to absorb most of the plant's energy leaving little for the production of fertile seed The absence too of the right pollen carriers, the flowers not seeming to be visited much by insects, may also be responsible for the scarcity of seed. The tree does well under shady conditions at Sibpur, but it is not native here. A suggestion might be made for pollination experiments to be carried out in Burma where it is native and locally not uncommon. Results might be better.

The introduction or reintroduction of conifers to the garden has been continued. The Araucarias do best, then come some representatives of the genera Pinus and Thuja. These are being added to and others tried.

The limitation of funds made it impossible to do any excavation to the garden tanks and not until machinery replaces the expensive man handling methods ordinarily employed where excavation is in question are we likely to see the garden tanks in a healthy state. Estimates of expenditure for deepening the limited tank area in the Eden Garden will

show how remote is the probability of our seeing this desirable improvement carried out extensively at Sibpur. But in spite of this and other defects the garden looks well. For the benefit of visitors who like to find its secluded spots it is all mowed and rolled several times a year. Modern machinery has come to our aid in the maintenance of its vistas, glades and maidans in lawn like condition. In this respect as in respect of the amount cultivated it is a much richer, more attractive and interesting place than it formerly could be.

Its roads now mostly macadamised, compare favourably with those of its neighbourhood, and the river bank from a point east of the ghat to the west end of the garden is fully revetted. This work has gone over to another department. It has proceeded apace and has rendered the garden much more attractive from the river side. The visiting public shows no decline in numbers, Indians especially flocking to it during fetes and holidays, and it remains a regular rendezvous for the school children of Calcutta.

2. **Plant and seed exchange.**—For horticultural and roadside planting schemes some 8,055 plants were dispatched to institutions in India while 462 packets and 28 lbs. of seed went out. Some 594 plants and 975 packets of seeds were received.

3. **Herbarium and Library.**—The total number of specimens determined is about 3,500 the majority being represented by collections from the Eastern Himalaya. These gatherings of Sikkim plants include a set of valuable specimens brought from Bhutan by His Excellency Sir John Anderson, Governor of Bengal. These specimens have since been worked out by the Curator of the Herbarium, who reports that some of the species of His Excellency's collection appear to be new records. Three or four specimens which could not be matched here had to be sent to Kew and Mr. Biswas expects that at least a couple of them may turn out new to science. These East Himalayan plants also include Mrs. Townend's collections during her trip to Northern Sikkim. A collection of about 290 specimens from Captain Kingdom Ward proved to be a substantial addition to the plants of the Naga Hills, Assam. All these specimens have been identified and mounted. A complete set has gone to the British Museum together with the list of identifications as desired by Captain Kingdom Ward. The collections of Dr. N. L. Bor and Mr. Biswas from Sandakphu and Phalute form also a fair portion of this year's identification ; besides several others received from Messrs. Parkinson of Dehra Dun, Purkayastha of Shillong, Ram Chandra Rao of Karachi, A. C. Dutt of Gauhati College, F. M. Bailey of Nepal, Mother Monica, C. E. Saxton and S. R. Bose of Calcutta and others.

The total number of specimens sent on loan this year is about 421, a much larger number than in the previous year, although the number of correspondents and the variety of specimens supplied are nearly the same. About 95 sheets of Psilotum were scrutinised by Mr. C. E. Parkinson. Mr. C. Norman of the British Museum of Natural History examined critically 77 sheets of Pleurospermum. Y. Tsiang of the Sun Yatsen University, Canton, China, studied 6 lots from the herbarium belonging to the genera *Aganosma*, *Toxocarpus*, and *Gamostemma*. Dr. S. P. Agharkar of the Calcutta University has

had 29 sheets of *Monotropa*. Some 10 sheets of *Daemonorops* were sent for study to the Director of the Botanic Gardens, Singapore while 116 Liverworts formed the subject for study of Mr. R. S, Chopra of the Punjab University who reports about a dozen of them as new records.

The specimens received back from loan is about 754. Mr. J. B. Hutchinson who was engaged in a monographic work of cultivated cotton plants returned, after revising the names, 554 sheets of specimens of Gossypium sent to him last year. Dr. H. N. Moldenke, Assistant Curator, the New York Botanic Garden, who is engaged in the study of the sheets of the genus Avicennia, returned 164 sheets belonging to this herbarium after incorporating necessary notes. About 36 specimens of a Dipterocarpus lot have been received back from the Forest Botanist, Federated Malay States Museum. From China, Tashkent and Singapore came 336 sheets presented and from other localities smaller numbers.

Plants going out on an exchange basis include 200 local species to Formosa, 30 specimens of Phœnix to America and a collection of flower buds of 17 species in special preserving fluid to Sweden. The National Herbarium, Manila, and other institutions throughout the world also benefited. Enquiries from very many sources on questions that can be answered or regarding which help can be given continue to come to the herbarium.

Some 3,173 specimens have been mounted, 5,097 specimens incorporated and 600 covers changed. The herbarium has this year unfortunately lost through death the services of an expert mounter Debendra Nath Nasker. It is not easy to procure the right type of man for this delicate work of mounting and it takes long experience to acquire the art.

Exploration was largely kept in abeyance due to the Superintendent being on leave but the Officiating Superintendent during the course of inspection work at Darjeeling made a tour to higher elevations.

In addition to Indians who came to headquarters several foreign visitors also visited the herbarium on special quests. Mr. Dowson formerly of the Irak Agricultural Department was helped with the palms and on the methods of their tapping ; Professor Tanaka made a prolonged study of our material and literature of Citrus.

Short papers on "Jute and allied fibres" ; The "Organic growth of the Calcutta Filterworks" ; "The Position of the genus Sansevieria in India" ; "The Vegetation of the Hazaribagh district" and "New species from Assam" were contributed by the Curator of the Herbarium.

The treatise on Water plants has attained a larger dimension than was originally intended and delay has resulted in consequence of the inclusion of more cryptogams, but the writing of the work is now completed and the plates nearly all prepared.

The library has been maintained, 30 periodicals being bought and some 106 received on exchange. Several books have been added and the demand for loans increases.

4. **Publications.**—The second part of the text of Sir David Prain and Mr. Burkill's monograph, the genus Dioscorea, is still in the Press.

5. **Finance.**—Out of the total budget allotment of Rs. 48,406 for staff and permanent establishment Rs. 48,382 were spent and under all other heads the expenditure amounted to Rs. 46,862 against the total allotment of Rs. 47,276. There was a net saving of Rs. 438 under all the heads during the year. Receipt of the department during the year amounted to Rs. 2,094.

6. **Staff.**—The writer held the post of Superintendent from 1st April to 30th May 1935, and from 30th November, 1935, to the end of the year. He was on leave out of India from 31st May to 29th November 1935. Mr. K. Biswas was Officiating Superintendent for the six months and was Curator of the Herbarium from 1st April to 30th May 1935, and from 30th November 1935 to the end of the year. Mr. V. Narayanaswami was Officiating Curator of the Herbarium from 31st May to 29th November 1935. Mr. N. Mitra was Curator of the Garden throughout the year. Mr. Md. Quasem Ali was Assistant Curator, Royal Botanic Garden, Calcutta, throughout the year. Mr. K. S. Joneja was Overseer, Royal Botanic Garden, from 1st April to 18th September 1935, and from 1st November 1935 to the end of the year. He was on leave from 19th September to 31st October 1935.

Mr. A. T. Banerjee was Head Clerk throughout the year. All officers and the clerical establishment have performed their duties satisfactorily.

CALCUTTA GARDENS.

Work in these gardens which include the Eden, Dalhousie Square and Curzon Gardens, was again mainly of a routine character. As elsewhere the short rainfall had the effect of delaying planting of winter annuals and the display of these was later than usual. It was, however, in appearance up to the average.

Social function at the Eden Gardens in honour of Their Excellencies The Viceroy and Countess Willingdon also affected to some extent the location and time of planting of annuals, the vicinity of the pagoda being left over till the second week of December.

Number of flowering shrubs and trees were planted out and an improvement effected in the hedges that lead from the pagoda to the bridge. These hedges were being destroyed by visitors who wished to gain short cuts and the *Acalyphas* composing them were replaced by Barleria, it being thought that this would be more resistant to encroachment and at the same time provide a change in the colour effect. The result is satisfactory.

The stocks of ferns and potted palms and orchids were maintained and increased by propagation.

As a result probably of differences in the water-supply the Eden Gardens prove a very much better place than the Sibpur Gardens for the development of Victoria regia. The leaves of this aquatic reached an enormous size. They became interesting objects to the public for photographic purposes and the plants flowered well.

A welcome collection in exchange was received from the Municipal Gardens, Bombay. This included a considerable number of Marantas for the shade houses and of varieties of Hibiscus for the open. The buildings, roads and benches have been kept in as good order as the limited funds would permit.

In the Eden Gardens some 42,000, in the Curzon 16,000 and in the Dalhousie Square Garden 13,000 square feet of road were attended to.

Estimates have been prepared for the excavation of the tanks in the Eden Gardens. Their proximity to Government House and the Council Chamber render it necessary that they should be free of mosquito larvæ, and the proposal to excavate them has the object of making the locality more sanitary. It is not likely that a scheme of this magnitude will readily find a place in the schedules for new expenditure and the ordinary and not very satisfactory palliatives of cleaning and spraying with oil will have to be continued.

The Gardens as a whole look well and there is continued improvement in the Curzon Garden.

One bad factor that will require more attention in the coming year is the state of the iron fences in the Eden Gardens. The budget allotment has been fairly distributed to the most necessary works and the state of all the gardens reflects this.

Finance. Out of the total grant of Rs. 30,763 under all heads Rs. 30,754 were spent leaving a balance of Rs. 9. Receipts of the Calcutta Gardens during the year amounted to Rs. 10.

Staff.—Mr. Merlin Jones was Assistant Curator, Government Gardens, Calcutta, throughout the year, Mr. Gholam Muhiuddin was Overseer from 1st April 1935 to 2nd March 1936. He went on leave for three months from 3rd March 1936. Mr. J. A. Hulbert, Overseer, Cinchona Plantation, Munsong, acted in his place from 3rd March 1936 to the end of the year.

LLOYD BOTANIC GARDEN, DARJEELING.

The rainfall at this Garden was 107·8 inches over the year, being below the average. But heavy continuous rain nevertheless destroyed seedlings in the open and replacements had to be made in beds in some cases more than once. The routine work of the Garden has been continued and several attempts at improvement made. Amongst these the most important was a renovation of the rockery. This involved the transport of fresh material to the Garden but the result has been much appreciated by the visiting public. A small ferroconcrete bridge and an artificial waterfall have been added to enhance the effect of the improvement. Species of the following genera from alpine and temperate regions have been planted up in the rockery :—Rhododendron, Rosa, Strobilanthes, Agapates, Vaccinium, Genista, Cotoneaster, Swertia, Spiraea, Lilium, Sexifraga, Anaphalis, Aster, Primula, Hypericum, Lonicera, Allium, Onosma, Pentapterygium, Gentiana, Smilax, Iris, Ranunculus, Berberis,

Daphne, Veronica, Helianthemum, Cathcartia, Meconopsis, Achillea, Arenaria and others. Several of these were collected by the Curator while on botanical tours.

Besides the usual display of flowers on beds the special beds of Meconopsis Wallichii, M. nepalensis, M. combrica, Cathcartia villosa, Primula cashmeriana grown from acclimatised seed, Lilium Nepalense, L. giganteum and L. Wallichii attracted many visitors. The Curator also records a long list, some of interesting or rare flowers in this part, that bloomed during the year. He has added to the Garden collections of orchids by drawing freely on the local jungle supply at the elevation of Darjeeling or lower down. Parts of the lawns have again had to be combed to restrict the growth of moss. Only those who have tried to maintain pure lawns in a damp climate at such elevation in the Estern Himalayas can know how repeatedly the operation of combing has to be done to secure a satisfactory turf.

Some 196 young plants were put out to permanent situations in the Garden during the year. The list includes additions to species already there, repeat trials with those that had not previously succeded and a few plants new to the Garden ; chizandra grandiflora and Stephania rotunda are new additions.

A fairly large number of additions was made as a result of exchanges with the Sun Yatsen Memorial Park, Nankin, China. It is to be recalled that the Lloyd Botanic Garden freely gave material to help and establish the Memorial Park some years ago. From China we are now in receipt of Aucuba chinensis, Idesia polycarpa, Vanieria tricuspidata, Deutzia pilosa, Prunus rufomicans, P. anomala, P. Willsonii, P. pubigera and species of Photinia, Lonicera, Cassia, Lindera, Rubus, Hydrangea, Clematis and other more or less temperate plants.

Some 5,009 packets of seeds, 313 plants and 9,969 seedlings were distributed.

The herbarium and library were kept in good condition and added to. The existence of a local herbarium in Darjeeling may not be so generally known as it should be. It is possible that more local collectors would use it if they knew of its existence. It is the work of successive Curators of the Garden, especially of Mr. Cave, and contains a fairly representative set of the plants of the Darjeeling district. The Curator will be glad to place its collections at the disposal of any local botanists who call to compare specimens and if they fail there the staff at Sibpur will always be glad to supplement the help from headquarters.

Two botanical tours were undertaken by the Curator during the year one to the higher and one to the lower elevations and he helped Mr. Biswas during the latter's inspection with materials for a Guide-book.

Over 47,000 visitors were counted at the gates.

As in former years the garden staff did what was possible to make the local annual flower show a success. The alpine groups staged by the garden were not at their best but the public showed its usual interest in them all the same.

Finance.—Out of the total allotment of Rs. 15,774 under all heads Rs. 15,543 were spent and a sum of Rs. 219 was surrendered leaving a a small balance of Rs. 12.

Staff.—Mr. S. N. Basu was Curator, Lloyd Botanic Garden, Darjeeling, throughout the year.

C. C. CALDER,

Superintendent, Royal Botanic Garden, Calcutta.

Statement showing the gauge readings at Dacca Waterworks Station on the river Buriganga for the week ending 29th August 1936.

Date.	At highest water.		At lowest water.		Commencement of—		Remarks.	
	Time.	Reading.	Time.	Reading.	Ebb tide.	Flow tide.	7 a.m.	5 p.m.
1936.								
23rd August ..							19·1	19·0
24th „ ..							18·9	18·8
25th „ ..							18·7	18·55
26th „ ..	Tide is not perceptible.						18·45	18·3
27th „ ..							18·2	18·1
28th „ ..							18·0	17·9
29th „ ..							17·95	17·95

Notable high and low water-levels of previous years.

	Taken at high tide.			Taken at low tide.		
27th August	1906	..	70·5	23rd February	1907	.. 51·06
5th September	1909	..	66·86	13th „	1908	.. 51·06
10th August	1910	..	69·86	12th March	1912	.. 51·06
1st „	1911	..	68·46	6th „	1914	.. 50·60
13th „	1912	..	67·16	22nd February	1915	.. 50·30
31st „	1915	..	69·7	15th „	1916	.. 50·60
8th „	1916	..	68·1	3rd March	1917	.. 51·0
12th „	1917	..	67·1	21st February	1918	.. 51·40
13th „	1918	..	69·12	26th „	1919	.. 50·4
2nd „	1919	..	66·8	18th „	1920	.. 50·9
8th September	1920	..	66·9	19th „	1921	.. 50·9
28th July	1921	..	68·4	8th March	1922	.. 51·05
10th August	1922	..	68·00	14th „	1923	.. 50·8
31st July	1923	..	66·15	16th February	1924	.. 50·50
29th August	1924	..	68·82	5th March	1925	.. 50·9
8th September	1925	..	68·52	9th February	1926	.. 2·2
15th August	1926	..	19·6	27th „	1927	.. 2·10
17th September	1927	..	18·70	16th „	1928	.. 2·2
22nd August	1928	..	20·0	21st „	1929	.. 2·0
13th July	1929	..	17·8	24th „	1930	.. 2·3
12th September	1930	..	18·65	28th „	1931	.. 2·2
16th August	1931	..	21·7	18th „	1932	.. 1·8
6th September	1932	..	18·5	6th „	1933	.. 2·10
7th „	1933	..	17·80	26th March	1934	.. 2·40
23rd August	1934	..	19·35	15th February	1935	.. 1·70
1st September	1935	..	19·80			

N.B.—Zero of the gauge at Dacca Waterworks prior to 11 a.m. on the 8th January 1926= —48·51 with reference to P. W. D. datum.

Zero of the gauge at Dacca Waterworks since 11 a.m. of the 8th January 1926=0·00 with reference to P. W. D. datum.

M. K. BHATTACHARJEE, *Executive Engineer,*
Khulna Division.

Khulna, the 10th September 1936.

Statement showing the gauge readings at Dacca Waterworks Station on the river Buriganga for the week ending 5th September 1936.

Date.	At highest water.		At lowest water.		Commencement of—		Remarks.	
	Time.	Reading.	Time.	Reading.	Ebb tide.	Flow tide.	7 a.m.	5 p.m.,
1936.								
30th August ..							17·95	17·95
31st „ ..							18·0	18·05
1st September ..							18·1	18·15
2nd „ ..	Tide is not perceptible.						18·2	18·3
3rd „ ..							18·35	18·4
4th „ ..							18·45	18·5
5th „ ..							18·5	18·5

Notable high and low water levels of previous years.

		Taken at high tide.			Taken at low tide.
27th August	1906 ..	70·5	23rd February	1907 ..	51·06
5th September	1909 ..	66·86	13th „	1908 ..	51·06
10th August	1910 ..	69·86	12th March	1912 ..	51·06
1st „	1911 ..	68·46	6th „	1914 ..	50·60
13th „	1912 ..	67·16	22nd February	1915 ..	50·30
31st „	1915 ..	69·7	15th „	1916 ..	50·60
8th „	1916 ..	68·1	3rd March	1917 ..	51·0
12th „	1917 ..	67·1	21st February	1918 ..	51·40
13th „	1918 ..	69·12	26th „	1919 ..	50·4
2nd „	1919 ..	66·8	18th „	1920 ..	50·9
8th September	1920 ..	66·9	19th „	1921 ..	50·9
28th July	1921 ..	68·4	8th March	1922 ..	51·05
10th August	1922 ..	68·00	14th „	1923 ..	50·8
31st July	1923 ..	66·15	16th February	1924 ..	50·50
29th August	1924 ..	68·82	5th March	1925 ..	50·9
8th September	1925 ..	68·52	9th February	1926 ..	2·2
15th August	1926 ..	19·6	27th „	1927 ..	2·10
17th September	1927 ..	18·70	16th „	1928 ..	2·2
22nd August	1928 ..	20·0	21st „	1929 ..	2·0
13th July	1929 ..	17·8	24th „	1930 ..	2·3
12th September	1930 ..	18·65	28th „	1931 ..	2·2
16th August	1931 ..	21·7	18th „	1932 ..	1·8
6th September	1932 ..	18·5	6th „	1933 ..	2·10
7th „	1933 ..	17·80	26th March	1934 ..	2·40
23rd August	1934 ..	19·35	15th February	1935 ..	1·70
1st September	1935 ..	19·80			

N.B.—Zero of the gauge at Dacca Waterworks prior to 11 a.m. on the 8th January 1926= −48·51 with reference to P. W. D. datum.

Zero of the gauge at Dacca Waterworks since 11 a.m. of the 8th January 1926=0·00 with reference to P. W. D. datum.

M. K. BHATTACHARJEE, *Executive Engineer,*
Khulna Division.

Khulna, the 10th September 1936.

DEPARTMENT OF AGRICULTURE, BENGAL.

Dacca, the 9th September 1936.

Monthly Weather and Crop Report of Bengal for August 1936.

I. *Character of the season.*—During the month under review, the rainfall was below the normal throughout the Presidency, except in Birbhum, Bankura, Jalpaiguri, Pabna, Dacca, Chittagong, Chittagong Hill Tracts and the Tripura State, where the fall was above the average. The usual rainfall statement is appended.

II. *Progress of agricultural operations.*—Transplantation of winter paddy continued favourably, except in parts of West and North Bengal, where more rain was needed to facilitate the operation. Harvesting of autumn paddy, cutting, steeping and washing of jute were in progress.

III. *The state of standing crops.*—The state of standing crops was generally satisfactory.

IV. *Prospects and probable outturn.*—The prospects of standing crops were reported to be generally fair. The outturn of sugarcane is expected to be 83 per cent. of the normal.

V. *Damage to standing crops.*—Some damage was caused to standing crops by insect-pests and floods.

VI. *Condition of agricultural stock.*—The condition of live-stock was generally fair. Sporadic cases of cattle-disease were, however, reported from thirteen districts in the Presidency and from Cooch Behar and Tripura States.

VII. *Failure of pasturage and fodder.*—Insufficiency of fodder was reported from parts of Birbhum, Rajshahi and Pabna.

VIII. *Prices of food-grains.*—During the second fortnight of the month the retail prices of common rice of the cheapest quality rose in seven districts and fell in four. The prices ranged from 9 seers per rupee in Darjeeling to 13 5/16 seers per rupee in Tippera.

IX. *Condition of agricultural population.*—The condition of agricultural population was, on the whole, fair, except in parts of 24-Parganas, Nadia, Murshidabad, Khulna, Bankura and Burdwan, where distress continues.

K. McLEAN,

Director of Agriculture, Bengal.

Statement showing the normal and actual rainfall in each district during August 1936.

Division.	District.	Normal district rainfall for the month of August.	Actual district rainfall for the month of August 1936.	Variation from the normal.	Division.	District.	Normal district rainfall for the month of August.	Actual district rainfall for the month of August 1936.	Variation from the normal.
		Inches.	Inches.	Inches.			Inches.	Inches.	Inches.
Presidency ..	24-Parganas ..	12·63	10·13	−2·50	Rajshahi—*concld.*	Rangpur ..	13·48	12·54	−0·94
	Nadia ..	10·19	9·37	−0·82		Bogra ..	11·54	9·18	−2·36
	Murshidabad ..	11·16	7·98	−3·18		Pabna ..	11·23	12·86	+1·63
	Jessore ..	10·75	7·94	−2·81		Malda ..	11·58	9·41	−2·17
	Khulna ..	13·12	10·68	−2·44					
Burdwan ..	Burdwan ..	11·52	10·39	−1·13	Dacca ..	Dacca ..	12·78	13·81	+1·03
	Birbhum ..	11·96	12·96	+1·00		Mymensingh ..	17·09	12·51	−4·58
	Bankura ..	11·31	11·88	+0·57		Faridpur ..	12·98	12·87	−0·11
	Midnapore ..	11·42	11·07	−0·35		Bakarganj ..	16·64	14·56	−2·08
	Hooghly ..	11·41	7·44	−3·97	Chittagong ..	Chittagong ..	23·18	26·33	+3·15
	Howrah ..	12·13	6·31	−5·82		Tippera ..	14·90	14·14	−0·76
Rajshahi ..	Rajshahi ..	10·75	6·80	−3·95		Noakhali ..	23·48	19·65	−3·83
	Dinajpur ..	14·62	11·92	−2·70		Chittagong Hill Tracts.	19·77	25·87	+6·10
	Jalpaiguri ..	28·23	30·38	+2·15	Cooch Behar ..	..	21·28	13·80	−7·48
	Darjeeling ..	25·84	24·03	−1·81	Tripura State ..	..	11·79	14·49	+2·70

DISTRICT REPORTS ON WEATHER AND CROPS.

For the week ending on the 9th September 1936.

Summary.—The rainfall was generally light to moderate. Transplantation of winter paddy is much advanced; weeding is in brisk progress. Harvesting of autumn crops continues. Prospects of standing crops are generally satisfactory. During the week ending Saturday, the 5th September, 1,779 and 4,850 persons received gratuitous relief in Nadia and Murshidabad, respectively. In Burdwan, daily average of persons receiving gratuitous relief was 8,190 during the week ending Saturday, the 5th idem. The average price of common rice for the province has fallen by about 0·28 per cent. as compared with that of the previous week.

Serial No.	District and sub-division.	Rainfall.	Price of common rice, in seers, per rupee.		Character of the weather, condition of crops, etc.
			This week.	Previous week.	
1	2	3	4	5	6
		Inches.			
1	24-Parganas ..	1·51	9½	9½	Weather seasonable. Condition of standing crops is favourable. Fodder and water are sufficient. No import or export of paddy except in Basirhat where import of paddy from East Bengal continues. Agricultural loans also gratuitous relief were distributed in Sadar, Basirhat and Diamond Harbour.
	Diamond Harbour..	3·42	9½	9½	
	Barrackpore ..	2·39	8½	8½	
	Baraset ..	2·46	9	9	
	Basirhat ..	1·35	11	11	
2	Nadia ..	2·48	8½	8½	Weather seasonable. Fodder and water are sufficient except in Bheramara and Daulatpur thanas. Cattle-disease exists in places in Ranaghat subdivision. Flood-water is gradually subsiding. No agricultural loan distributed during the week. Gratuitous relief was given to 72 persons in Sadar and 1,707 persons in Chuadanga for the week ending 5th September 1936. In Kustia gratuitous relief was given to 1,903 persons up to 31st August. Harvesting of jute not yet commenced except in Kushtia subdivision.
	Kushtia ..	0·73	9½	9	
	Meherpur ..	3·70	10	11	
	Chuadanga ..	1·31	11	11	
	Ranaghat ..	1·97	9½	9½	
3	Murshidabad ..	1·26	9½	9½	Weather seasonable. Prospects of standing crops on high lands are favourable. Fodder and water are sufficient. No large import or export. Number of persons receiving gratuitous relief in the distressed areas for the week ending Saturday, the 5th September, was 235, 3,157 and 1,458 in Lalbagh, Kandi and Jangipur subdivisions, respectively. The flood remains steady during the week and relief is being given to the flood-stricken people of almost all thanas of Sadar subdivision.
	Lalbagh ..	0·80	10	10	
	Jangipur ..	1·72	10	10	
	Kandi ..	2·94	10½	11	
4	Jessore ..	1·28	11½	11½	Weather seasonable. Prospects of standing crops are fair Harvesting of *aus* paddy is nearly finished and that of jute continues. No large export or import. Fodder and water are sufficient.
	Jhenidah ..	1·66	12	12	
	Magura ..	1·95	13	13	
	Narail ..	2·99	11	11	
	Bongaon ..	0·98	10	10	
5	Khulna ..	3·05	10	10	Weather seasonable. Fodder and water are sufficient. Test relief works suspended.
	Satkhira ..	1·04	10½	10½	
	Bagerhat ..	1·80	8½	8½	

Serial No.	District and sub-division.	Rainfall.	Price of common rice, in seers, per rupee.		Character of the weather, condition of crops, etc.
			This week.	Previous week.	
1	2	3	4	5	6
		Inches.			
6	Burdwan ..	4·34	9	9	Weather seasonable. Condition of crop is favourable. Fodder is sufficient. 8,190 persons daily on average received gratuitous relief during the week ending 5th September 1936.
	Asansol ..	2·89	11	11	
	Katwa ..	3·05	9½	9	
	Kalna ..	3·30	8½	8½	
7	Birbhum ..	3·94	10	10½	Weather seasonable and cloudy. Prospects of standing crops are good. Fodder and water are sufficient.
	Rampurhat ..	3·47	10½	10½	
8	Bankura ..	0·42	10	10	Weather seasonable. Harvesting of *Gora* paddy is finished in Khatra Circle. Weeding continues. Prospects of standing crops are good. Fodder and water are sufficient.
	Vishnupur ..	3·51	10	10	
9	Midnapore ..	0·46	10½	10	Transplantation of winter paddy is over. Condition of standing crops is fair. Fodder and water are sufficient.
	Contai ..	2·06	10	10	
	Tamluk ..	2·34	8½	8½	
	Ghatal ..	2·23	11½	10½	
	Jhargram ..	9·10	10½	10½	
10	Hooghly ..	4·63	9	9	Weather seasonable. Fodder and water are sufficient. Harvesting of jute continues.
	Serampore ..	3·11	9½	9	
	Arambagh ..	1·45	9½	9½	
11	Howrah ..	3·26	10	10	Transplantation of winter paddy is over. Fodder and water are sufficient. Harvesting of jute continues.
	Uluberia ..	2·04	9½	9½	
12	Rajshahi (Rampur Boalia).	1·02	9½	9½	Weather seasonable. Condition of the standing crops appears to be fair. Fodder and water are available.
	Naogaon ..	3·08	10½	10½	
	Nator ..	3·04	9½	9½	
13	Dinajpur ..	1·34	10	10	Weather seasonable. Its effects on agricultural operation is favourable. Fodder and water are sufficient. Cattle-disease is reported from Birganj and Pirganj thanas.
	Thakurgaon ..	1·05	9	10	
	Balurghat ..	4·40	10	11	
14	Jalpaiguri ..	2·63	11	11	Weather seasonable. Condition and prospects of standing crops are favourable. Harvesting of jute is nearing completion. Fodder and water are sufficient.
	Alipur ..	0·24	9	9	

Serial No.	District and sub-division.	Rainfall.	Price of common rice, in seers, per rupee.		Character of the weather, condition of crops, etc.
			This week.	Previous week.	
1	2	3	4	5	6
		Inches.			
15	Darjeeling ..	1·10	8	8	Weather favourable. Transplantation of paddy is completed. Harvesting of *bhutta* and potatoes still continues. Fodder and water are sufficient.
	Kurseong ..	8·76	8	8	
	Siliguri ..	3·84	10	9½	
	Kalimpong ..	2·80	7	7	
16	Rangpur ..	0·02	10½	10½	. . .
	Nilphamari ..	3·13	10½	10½	
	Kurigram ..	0·37	9½	9½	
	Gaibandha ..	0·05	9	9	
17	Bogra ..	1·37	10½	10½	The sky is cloudy. Agricultural operation and growth of standing crops not affected by weather condition. Harvesting of jute continue. No damage. Fodder and water are sufficient.
18	Pabna ..	4·03	10	10	Weather seasonable. Sky cloudy. Its effects on standing crops are good. Harvesting of jute still continues. Fodder and water are sufficient.
	Serajganj ..	1·64	11½	11½	
19	Malda ..	2·48	10½	10½	Weather cloudy and rainy. Prospects of standing crops are fair. Fodder and water are available.
20	Cooch Behar ..	Nil	12 4/16	12 4/16	Weather seasonable. Preparation of lands for winter paddy and transplantation of seedlings continue. Preparation of lands for rearing tobacco seedlings continues in places. Cutting, steeping and washing of jute continuing. Prospects and condition of standing crops fair. Fodder and water sufficient. Cattle-disease is reported from Dinhatta, Tufanganj and Sadar subdivisions.
21	Dacca ..	1·37	11	11	Rainfall at North Sadar (Kapasia) 6·16. Weather seasonable and its effects on the agricultural operations are good. No large export and import. Prospects of standing crops are good. Fodder and water are sufficient. Cattle-disease reported from Narayanganj subdivision.
	Manikganj ..	4·63	10¾	10¾	
	Narayanganj ..	2·70	12	12	
	Munshiganj ..	(*n*)	(*n*)	10	

(*n*) Not reported.

Serial No.	District and sub-division.	Rainfall.	Price of common rice, in seers, per rupee.		Character of the weather, condition of crops, etc.
			This week.	Previous week.	
1	2	3	4	5	6
		Inches.			
22	Mymensingh ..	0·59	10	10	Weather seasonable. Condition of crops is fair. Transplantation of winter paddy continues. Harvesting of *aus* paddy is finished. Fodder and water are available.
	Jamalpur ..	0·60	10½	10½	
	Tangail ..	2·53	10	10	
	Netrakona ..	0·90	12	12½	
	Kishorganj ..	1·13	10 11/16	10 11/16	
23	Faridpur ..	1·18	11	11	Weather seasonable. Condition of standing crops is fair. Fodder and water are sufficient.
	Goalundo (Rajbari)	2·18	11	11	
	Madaripur ..	1·94	11½	11	
	Gopalganj (*a*) ..	1·34	10½	10½	
24	Bakarganj (Barisal)	1·11	10	10½	Weather seasonable. Prospects of standing crops are fair in Pirojpur and Patuakhali and good in Bhola and Sadar. Fodder and water are sufficient.
	Pirojpur ..	0·89	10½	10½	
	Patuakhali ..	2·00	10½	10½	
	Dakshin Shabazpur (Bhola).	3·61	10	10	
25	Chittagong ..	1·05	10 11*	10 11*	Weather seasonable. Condition of standing *aman* crop is fair at Sadar and not satisfactory at Cox's Bazar. Cattle-disease is reported from Rangunia. Fodder and water are sufficient. Panga salt sells at 14 seers at Sadar and 13 seers at Cox's Bazar.
	Cox's Bazar ..	2·53	11	(*n*)	
26	Tippera (Comilla) ..	2·28	10	10	Weather fair.
	Brahmanbaria ..	0·73	10½	10½	
	Chandpur ..	1·05	11½	10½	
27	Noakhali ..	4·48	10	10	Heavy rainfall has obstructed transplantation of *amon* seedlings. Fodder and water are sufficient. Cattle-disease is reported from Feni.
	Feni ..	3·80	10½	10½	
28	Chittagong Hill Tracts.	2·85	13	13	Weather cloudy. Its effects are favourable. Fodder and water are sufficient. Cattle disease has again broken out in Mong circle.
29	Tripura State ..	1·65	13½	13	Weather seasonable. Fodder and water are sufficient. Cattle-disease exists in Belonia and Sabroom Divisions. Cotton sells at Rs. 9 to Rs. 12 and jute at Rs. 3 to Rs. 5 per maund.

(*a*) The rainfall at Haridaspur, which is very near to Gopalganj, is shown here.

* Burma rice. (*n*) Not reported.

S. ABDULLAH, for *Director of Agriculture, Bengal.*

Dacca, the 14th September 1936.

Statement of weekly gauge readings on the river Ganges at Rampur Boalia for the week ending the 5th September 1936.

Date.	Hour.	Height of surface above P. W. D. datum.	Height of surface above P. W. D. datum on the same date last year.	Remarks.
1936.				
30th August	7 a.m.	61·00	60·00	Value of B. M. on Rajshahi College step =64·73 P. W. D. Zero of gauge=0·00 P. W. D.
31st „	7 „	60·90	59·00	
1st September ..	7 „	60·90	58·20	
2nd „	7 „	60·45	57·45	
3rd „	7 „	60·35	56·55	
4th „	7 „	60·10	55·90	
5th „	7 „	60·10	55·40	

Highest recorded level on 26-8-1879=64·24.
Lowest recorded level on 24-4-1931=32·05.

S. GUPTA, *Subdivisional Officer,*
Irrigation Department, Rajshahi.

Rampur Boalia, the 5th September 1936.

CORPORATION OF CALCUTTA.

NOTICES.

Central Municipal Office, the 11th September 1936.

It is hereby notified for general information that the Corporation of Calcutta under powers vested in them in this behalf have by a resolution, dated the 2nd September 1936, prescribed the alignment of the portion of Serpentine Lane from St. James Park to Lower Circular Road in Ward No. 11 to a width of 20 feet.

A copy of the plan prepared in this behalf may be seen in the office of the Chief Valuer and Surveyor of the Corporation any day between 11 a.m. and 3 p.m. on payment of usual fees.

It is hereby notified for general information that the Corporation of Calcutta under powers vested in them in this behalf have by a resolution, dated the 26th August 1936, modified the alignment of Hussain Shah Road (formerly Mominpore Lane) at its junction with Bhukoilash Road in Ward No. 24.

A copy of the plan prepared in this behalf may be seen in the office of the Chief Valuer and Surveyor of the Corporation any day between 11 a.m. and 3 p.m. on payment of usual fees.

J. C. MUKERJEA,
Chief Executive Officer.

Vital statistics of towns with a population of 50,000 and over of the Bengal Presidency for the week ending Saturday, the 5th September 1936.

Districts.	Nos.	Towns.	Population under registration according to census of 1931.			Births registered.		Deaths registered																								
			Male.	Female.	Total.	Number registered (excluding still births).	Still-births registered.	Cholera.	Small-pox.	Plague.	Cerebro-spinal meningitis.	Malaria.	Enteric fever.	Measles.	Relapsing fever. (Spirochætal).	Kala-azar	Influenza.	Other fevers.	Dysentery.	Diarrhœa.	Pneumonia.	Pulmonary tuberculosis.	Other respiratory diseases.	Injuries including suicide.	Deaths from child-birth.	Other causes.	Total of all causes.			Total of corresponding week of the previous year.			
																											Male.	Female.	Total.	Male.	Female.	Total.
Calcutta ..	1	Calcutta ..	778,817	362,045	1,140,862	549	88	6	4	..	5	12	30	..	..	2	7	14	33	5	64	70	42	11	2	270	305	272	577	308	277	585
Burdwan ..	2	Asansol Mining Settlement.	209,544	173,136	382,680	75	..	..	..	..	..	..	2	..	..	..	..	12	2	1	6	1	1	1	..	28	30	24	54	91	92	183
Howrah ..	3	Howrah ..	145,120	79,753	224,873	158	11	..	2	..	..	1	1	..	..	..	..	1	7	5	5	6	14	2	1	36	35	46	81	65	58	123
Dacca ..	4	Dacca ..	79,365	59,153	138,518	86	2	..	..	..	..	..	3	..	..	2	..	..	6	7	16	2	4	1	2	29	36	36	72	45	27	72
24-Parganas	5	Bhatpara ..	60,154	24,841	84,975	35	..	..	..	..	..	..	..	..	..	..	..	13	2	4	..	2	3	..	..	11	18	17	35	11	7	18
	6	Garden Reach	36,131	19,741	55,872	10	5	..	..	..	..	..	..	..	..	..	..	1	2	2	..	..	1	..	1	..	3	4	7	4	4	8
Chittagong ..	7	Chittagong	35,049	18,107	53,156	38	..	1	..	..	..	1	..	..	..	..	..	2	2	..	1	1	..	2	..	5	13	2	15	9	3	12

A. C. CHATTERJI, M.B., D.P.H., MAJOR, I.M.S., *Director of Public Health, Bengal.*

Calcutta, the 12th September 1936.

IRRIGATION DEPARTMENT, BENGAL.

Abstract statement showing the approximate volume of traffic and the tollage on canals in Bengal classed as Major Works and Minor Works and Navigation for the month of July 1936 as compared with the corresponding month of the previous year.

Canals.	1936-37.					
	Weight of cargo.		Rafts.		Tollage.	
	During the month.	To end of the month.	During the month.	To end of the month.	During the month.	To end of the month.
Major Works.	Tons.	Tons.	No.	No.	Rs.	Rs.
Midnapore Canal	846	3,918	1,700	4,375	1 011	4,234
Hijili Tidal Canal	3,184	18,000	100	425	5,310	29,348
Total ..	4,030	21,918	1,800	4,800	6,321	33,582
Minor Works and Navigation.						
Calcutta and Eastern Canals ..	24,983	1,03,293	67,968	1,41,787	16,116	66,422
Tolly's Nala	24,278	99,895	30,975	1,64,607	7,852	30,667
Madaripur Bil Route	92,677	1,24,849	1,852	13,349	22,390	37,470
Total ..	1,41,938	3,28,037	1,00,795	3,19,743	46,358	1,34,559
Magrahat Channels	2,728	9,765	250	2,256	1,587	6,043
Orissa Coast Canal	2,183	12,949	..	4,275	2,106	11,861
Grand Total ..	1,46,849	3,50,751	1,01,045	3,26,274	50,051	1,52,163

Canals.	1935-36.					
	Weight of cargo.		Rafts.		Tollage.	
	During the month.	To end of the month.	During the month.	To end of the month.	During the month.	To end of the month.
Major Works.	Tons.	Tons.	No.	No.	Rs.	Rs.
Midnapore Canal	957	3,996	725	4,500	1,078	4,813
Hijili Tidal Canal	4,990	15,919	50	200	8,550	27,526
Total ..	5,947	19,915	775	4,700	9,628	32,339
Minor Works and Navigation.						
Calcutta and Eastern Canals ..	23,889	1,01,730	21,233	1,40,107	16,220	70,159
Tolly's Nala	21,698	91,605	36,585	1,62,176	6,853	28,518
Madaripur Bil Route	97,004	1,31,233	..	11,050	24,057	43,062
Total ..	1,42,591	3,24,568	57,818	3,13,633	47,130	1,41,739
Magrahat Channels	2,207	9,587	1,000	7,875	1,824	5,388
Orissa Coast Canal	3,310	12,576	..	1,425	2,819	10,575
Grand Total ..	1,48,108	3,46,731	58,818	3,22,933	51,773	1,57,702

Canal.	July 1936.			
	Tollage, 1936-37.		Tollage, 1935-36.	
	During the month.	To end of the month.	During the month.	To end of the month.
	Rs.	Rs.	Rs.	Rs.
Sundarbans Steamer Route	5,126	19,556	4,728	16,998

J. F. RUSSELL,

Personal Assistant to the Chief Engineer to the Government of Bengal.

Calcutta, the 9th September 1936.

FORM C—BENGAL.

STATEMENT OF COTTON PRESSED IN THE BENGAL PRESIDENCY FOR THE WEEK ENDING THE 4th SEPTEMBER 1936.

[Section 5 (2) of the Cotton Ginning and Pressing Factories Act, 1925.]

Name of Division or block.	Number of bales pressed.				District included in the block.
	During the week.	During the corresponding week last year.	Since 1st September 1936 (the date prescribed by the Local Government as the commencement of the season).	During the corresponding period last year.	
The Bengal Presidency	710* bales of 400 lbs. each.	322	273	322	All districts in the Presidency.

* Includes 437 bales pressed on the 20th, 30th and 31st August 1936.

J. B. McBRIDE,
Chief Inspector of Factories, Bengal.

Liberality of Maulvi Haji Miyan Khan Sawdagar, a Commissioner of the Chittagong Municipality.

No. 3619T.Edn., dated Darjeeling, the 10th September 1936.

From—H. GRAHAM, ESQ., C.I.E., I.C.S., Secy. to the Govt. of Bengal, Education Department,

To—The Commissioner of the Chittagong Division.

Minister-in-charge: The Hon'ble Khan Bahadur M. Azizul Haque.

With reference to your memorandum No. 4281G., dated the 26th August 1936, and in supersession of Government order No. 217T. Edn., dated the 4th May 1936, I am directed to request that you will be so good as to convey the thanks of Government (Ministry of Education) to Maulvi Haji Miyan Khan Sawdagar, a Commissioner of the Chittagong Municipality, for his liberality and public spirit in having made a gift of lands and buildings, etc., worth Rs. 16,800 to the District School Board, Chittagong, for two model primary schools for boys and girls at Bakalia, police-station Panchlaish, district Chittagong.

Resolution on the Annual Report of the Department of Agriculture, Bengal, for the year 1935-36.

GOVERNMENT OF BENGAL.

Agriculture and Industries Department.

Agriculture.

DARJEELING, THE 9TH SEPTEMBER 1936.

RESOLUTION—No. 426T.A.I. AGRI.

Minister-in-charge: The Hon'ble Nawab Sir Mohiuddin Farooqui, Kt., of Ratanpur.

Read—

The Annual Report of the Department of Agriculture, Bengal, for the year 1935-36.

Administration.—Mr. K. McLean continued in charge of the Department throughout the year. He was confirmed as Director of Agriculture, Bengal, with effect from the 20th October 1935 on retirement of Dr. G. P. Hector.

On return from leave in October 1935 Mr. M. Carbery, Agricultural Chemist, Bengal, took over charge of the post of Assistant Director of Agriculture, Bengal, from Mr. P. C. Chaudhuri, being confirmed in the post at the same time. Mr. P. C. Chaudhuri, Deputy Director of Sericulture, was appointed as Deputy Director of Agriculture, Eastern Circle, in October 1935, in place of Mr. F. Smith, retired, on being relieved by Mr. Carbery. In March 1936 Rai Sahib Jamini Kumar Biswas, who was officiating as Deputy Director of Agriculture, Northern Circle, went on leave preparatory to retirement.

Dr. S. Hedayetullah, M.Sc. (Cal.), PH.D. (London), was appointed as Economic Botanist, with effect from 1st October 1935.

General.—The season was a very difficult one for agricultural operations. Owing to shortage of rain, the sowings were generally late specially in highland areas, but in East and parts of North Bengal lowland sowings were carried on satisfactorily with the usual soil moisture. Although general rainfall from the middle of May till June facilitated *kharif* sowings in Western and Northern Bengal and the preparation of winter paddy seed beds, subsequent periods of shortage of rain followed by a long spell of drought seriously affected the winter paddy crop and the *rabi* crops. Western Bengal was most seriously affected and in the districts of Burdwan, Birbhum, Bankura, Hooghly and Murshidabad, which suffered from drought in the previous year, little or no crop was obtained over wide areas and scarcity had to be declared. The only crops returning a normal outturn were jute and lowland *aus* paddy for which the season was favourable.

The intensive campaign for the restriction of the area under jute which was undertaken in 1934-35 by officers of the Agricultural Department with the assistance of the local officials and non-officials bore fruit in the shape of a considerable reduction in the area under the crop and in improvement of its prices. As the underlying object of the restriction was to restore a healthy price-level by bringing the surplus stocks of jute back to normal and avoiding a glut in the market and as it was realised that it would be disastrous if, in the hope of immediate profits, the cultivator failed to restrict to the full extent during the coming season, vigorous propaganda was again undertaken for restriction of the area under the crop during 1935-36. To ensure success a considerable number of temporary demonstrators were also employed to instruct the cultivators in the cultivation of *rabi* crops and to introduce alternative crops such as sugarcane and groundnut.

Research and experiment.—Considerable success attended the activities of the research section during the year where full advantage was taken of the financial assistance offered by the Imperial Council of Agricultural Research and of the advice afforded by their experts. As many as seven schemes of research were worked with their grants, noteworthy among them being those relating to trade rices, sugarcane, fruits, marketing and animal nutrition. At the Universities of Calcutta and Dacca also research work on soils and soil colloids, on nutrition of rice plant and on experimental errors in field trials was continued with their grants. It is confidently hoped that by the successful working of these schemes results of far-reaching importance will be achieved before long which will go a great way towards the amelioration of the economic condition of the cultivating classes.

The work on the scheme for investigation of the possibilities of improving Comilla cotton which was started in the previous year was continued with the grant of the Indian Central Cotton Committee.

That the value of sugarcane as a revenue crop has been recognised by the cultivator would be apparent from the fact that the area under the crop increased from 276,000 acres to 325,000 acres during the year, of which 244,000 acres were reported to be under C. O. 213. Eight vacuum pan factories and 54 open pan factories worked during the season with a full supply of cane. During the year 19,072,000 of C. O. 213 cuttings were distributed. Rupees 15,500 was also sanctioned to meet the cost of cuttings in introducing sugarcane as a substitute crop for jute.

Fifteen new types of cane were introduced into the field testing area from the seed-testing station. Of the types already under investigation C. O. 281 and C. O. 381 proved most promising early ripeners.

There was an increasing demand for departmental types of tobacco and during the year, 4,911 tolas of seed were distributed. The number of demonstration centres was 441 extending over 140 acres and the total area under tobacco was 307,000 acres, of which 70,000 acres were reported to be planted with departmental types.

The investigation into the manurial value of Damodar silt was continued, the silt being found to be rich in all manurial ingredients—Nitrogen, Potash and Phosphate. The investigations undertaken in connection with the economic enquiry into the cost of production of cane and other crops in certain tracts of Bengal showed that in the soils in Bogra and Birbhum lime is lacking, and in Bogra Potash is more than sufficient throughout while Nitrogen and Phosphate are only sufficient in the surface soil. The Birbhum soils were found to be lacking in all essential plant foods.

Several samples of 1934 crop of jute from the experimental plots in different farms in the province were sent to the Dundee Chamber of Commerce and the assessors placed a new type, D. 386 in the first category. This type is a heavy yielder, the yield exceeding that of D. 154 on the Rangpur and Mymensingh farms. In the Olitorius trials, Chinsura Green proved superior to all the other types tested against it.

Animal husbandry.—The Department was fully alive to the necessity of maintaining a sustained effort to attract that unofficial support and interest in live-stock improvement which is so essential to real progress. While the main difficulty in the way of the improvement of stock has been shortage of funds, it was possible to undertake an intensive campaign in the districts of Malda-Rajshahi, Nadia-Murshidabad, Hooghly-Bankura, Dacca-Faridpur and Tippera-Noakhali under the charge of 5 live-stock officers, of whom 3 were appointed during the year. 230 bulls were in charge of the live-stock officer in Rajshahi-Malda and 65 under the charge of the officer in Hooghly-Bankura districts. 19 stud bulls were issued free from district farms and 14 were sold for stud purposes in the districts. The bulls were chosen with great care having regard to their suitability to the type of the cows in the districts concerned and the fullest possible advantage was taken of the pedigree stock available at the Government farms. As regards progeny of the stud bulls, the district boards of Malda and Rajshahi continued to contribute towards the purchase of bulls sired by departmental stud bulls. They also purchased 17 selected bulls from jails for free issue. The district boards of Murshidabad and Hooghly also allotted funds for the purchase of bulls. The premium scheme continued and with a view to meeting the demand for premia from an increased number of owners of bulls and allowing their bulls to come under departmental supervision the amount of premium for each individual premium holder was reduced from Rs. 10 to Rs. 5 each per mensem. The bulls under the premium system covered 3,908 cows against 2,733 in the previous year.

Funds were obtained during the year from the Government of India grant for rural uplift and in accordance with the scheme sanctioned in connection therewith 100 stud bulls will be provided in each of the 10 districts in which live-stock officers are at present posted. In addition to ensuring the most profitable use of these bulls the live-stock officers will endeavour to impress on cultivators and others in their areas the essential importance of preventing breeding by existing bulls of inferior quality. To this effect 10 veterinary officers are also to be posted in these districts for a period of two years to undertake an intensive campaign of castration of scrub bulls.

In the poultry section at the Dacca farm the sixth R.I.R. Chittagong cross continued to prove successful, the best layer laying 240 eggs in the year against 125 eggs of the fifth cross laid during the previous year.

In accordance with a scheme for the improvement of poultry sanctioned at a total cost of Rs. 500 out of the Government of India grant for rural unlift, it is proposed to distribute among cultivators in each of the 10 districts supervised by live-stock officers 20 selected mating birds from the poultry section at Dacca on condition that they agree to get rid of their old male stock.

There has been a continued demand for cuttings of Napier grass which it has been difficult to meet. Around every homestead there is a considerable area of land which is at present not being put to use, and the Department are taking up the introduction of Napier grass in these areas.

Demonstration and propaganda.—While the activities of the Department on the demonstration and propaganda side continued on the usual lines through lantern lectures in hats, exhibition and fairs, through the medium of wireless talks on agriculture given by departmental officers in Calcutta and through cinema shows and departmental publications, it is very satisfactory to note the increasing interest which a large number of district and union boards, as well as khas mahals and Court of Wards estates have taken in the matter by the provision of funds for demonstrating staff and for distribution of seeds, etc.

It is unfortunate that the weather conditions in Western Bengal proved a bad set-back to the increase in the area of departmental paddies. On wide areas in Burdwan, Bankura, Birbhum and Hooghly no crop was obtained and a nucleus of departmental types in paddy seed farms was entirely lost. In these areas seed farms will have to be restocked and a start made again from the beginning. Practically all the farms suffered from drought during the *aman* season, and the Burdwan, Dinajpur and Rangpur farms had floods as well which destroyed the whole of the *aman* paddy crop. On the other hand sugarcane was most successful, C. O. 243 and C. O. 213 giving a yield of 129 maunds and 111 maunds, respectively, of gur per acre in the field.

Artificial farm yard manure was manufactured on all farms as a matter of routine for application to the land and for demonstration to cultivators, the total quantity manufactured being 32,470 maunds.

Agricultural education.—The scheme for the establishment of an Agricultural Institute at Dacca did not materialise owing to lack of funds, but it is noteworthy that the nucleus of a higher Agricultural Institute was established at Rajshahi with the legacy of the late Kumar Basanta Kumar Roy of Dighapatia. The Institution has been named the "Basanta Kumar Agricultural Institute," Rajshahi, of which the course of study will include theoretical and practical training in dairy farming, comprising preparation of dairy products, horticulture, poultry, cigar-making and agricultural farming and will cover a period of four years for Matriculates and those who have not read up to the end of the I. Sc. course, and two years for those who have read up to the end of the I. Sc. course or passed the I. Sc. examination. The scheme will come into operation before long.

There has been an increased demand for admission into the Secondary Agricultural School at Dacca due mainly to the provision of stipends by the district boards for students coming from their respective districts, 14 stipends having been allotted during the year. Accommodation for this increased number is also available owing to the suspension of the scheme for training of teachers at the school which now provides facilities for training of 3 teachers only to replace casualties among trained teachers. The number of schools conducting agricultural classes under the scheme for instruction in agriculture in High English and Middle English Schools during the year was 51, of which 2 were new additions, namely, the Ramkrishna Mission Middle English School, Sarisa, in 24-Parganas, and the St. Gabriel Middle English School, Canning. As many as 3,043 students received instruction in the subject—both theoretical and practical. The working of the schools is regularly inspected and steps are taken to eliminate those which work badly.

The subject of the teaching of nature study in primary schools met with encouraging results during the year, the number of primary schools

with provision for such training having considerably increased in many of the districts. The district board of Mymensingh contributed Rs. 100 as a reward to the teachers in 20 primary schools in the district which showed the best results.

Acknowledgment.—Government in the Ministry of Agriculture have much pleasure in recording their appreciation of the valuable services rendered by Mr. K. McLean in the administration of the Department. They have also noted the names of other departmental officers—superior and subordinate—commended in the report. Thanks of Government are also due to the numerous officials and non-officials who helped the Department in various ways, and to the members of the Provincial Agricultural Research Committee and other Committees and Boards attached to the Department for the services rendered by them.

By order of the Govt. of Bengal

(Ministry of Agriculture),

H. S. E. STEVENS,

Secy. to the Govt. of Bengal.

Printed and published by the Superintendent, Government Printing, Bengal Government Press, Alipore, Bengal, on the 17th September 1936.

Registered No. C207

No. 39 of 1936

The Calcutta Gazette

Published by Authority

THURSDAY, SEPTEMBER 24, 1936.

CONTENTS:

	Page.
Part I.—Orders and Notifications by the Governor of Bengal, the Government of Bengal, the High Court, Government Treasury, etc.	2299—2334
Part IA.—Orders and Notifications by the Government of India republished for general information	323—324
Part IB.—Educational Notices ..	1407—1502
Part II.—Advertisements ..	973—988
Part III.—Acts of the Bengal Legislative Council	*Nil*
Part IV.—Bills introduced in the Bengal Legislative Council, Reports of Select Committees presented or to be presented to that Council, and Bills published before introduction in that Council ..	*Nil*
Part V.—Acts of the Indian Legislature assented to by the Governor-General and Ordinances promulgated under section 72 of the Government of India Act ..	*Nil*
Part VI.—Bills introduced in the Council of State and Legislative Assembly, Reports of Select Committees presented to the Council and Assembly and Bills published under rule 18 of the Indian Legislative Rules	
The General Clauses (Amendment) Bill, 1936, with Statement of Objects and Reasons	141—142
Supplement No. 39 :—	
Cotton Ginning and Pressing—Monthly Return of Vital Statistics—Weekly Gauge Readings Price-list (retail) of Staple Food-Crops of Bengal Weekly Weather and Crop Report Area leased for irrigation—Weekly Vital Statistics	1249—1267
Resolution on the Reports of the Sanitary Board and of the Chief Engineer, Public Health Department, Bengal, for the year 1935 ..	1268

PART I

Orders and Notifications by the Governor of Bengal, the Government of Bengal, the High Court, Government Treasury, etc.

Orders by the Government of Bengal.

No. 11016A.

Appointments and Transfers.

General.

24-Parganas-Dacca Divn.—No. 10826A. — 15th September 1936. The orders contained in Government notification No. 10367A., dated the 1st September 1936, transferring Babu Subodh Chandra Das Gupta, Sub-Deputy Collector, 24-Parganas, to the Dacca Division, are cancelled.

Murshidabad-Hooghly. — No. 10843A.— 15th September 1936.—Babu Satish Chandra Upadhyaya, Deputy Magistrate and Deputy Collector, Murshidabad, is transferred to the headquarters station of the Hooghly district.

Hooghly-Pabna. — No. 10848A. — 15th September 1936.—Babu Narendra Nath Chaudhuri, Deputy Magistrate and Deputy Collector, Hooghly, is transferred to the Serajganj subdivision of the Pabna district.

Murshidabad-Chittagong.—No. 10865A.—16th September 1936.—Maulvi Motaharul Huq, Deputy Magistrate and Deputy Collector, on probation, employed as Assistant Manager, Estate of the Nawab Bahadur of Murshidabad, is posted to the headquarters station of the Chittagong district.

Tippera-Chittagong.—No. 10869A.—16th September 1936.—The orders of the 29th August 1936, transferring Babu Gadadhar Singh Roy, Deputy Magistrate and Deputy Collector, on probation, Tippera, to the headquarters station of the Chittagong district, are cancelled.

Tippera.—No. 1358A.D.—18th September 1936.—Mr. J. George, I.C.S., Joint Magistrate and Deputy Collector, is posted to the headquarters station of the Tippera district on relinquishing charge of his present officiating appointment as District and Sessions Judge of that district.

24-Parganas-Dacca.—No. 10911A. — 18th September 1936.—Mr. S. S. R. Hattiangadi, I.C.S., officiating Additional District and Sessions Judge, 24-Parganas, is appointed to act, until further orders, as an Additional District and Sessions Judge, Dacca.

24-Parganas-Midnapore. — No. 10928A. — 18th September 1936. — In exercise of the powers conferred by sub-section (*2*) of section 10 of the Code of Criminal Procedure, 1898 (Act V of 1898), the Governor in Council is pleased to appoint Mr. R. Gupta, I.C.S., officiating Additional District Magistrate, 24-Parganas, to be Second Additional District Magistrate, Midnapore, and to direct that he shall have, during the period he is so employed, all the powers of a District Magistrate under the said Code and under all other laws in force in that district.

Faridpur.—No. 10998A. — 18th September 1936. Babu Kumaresh Roy, Deputy Magistrate and Deputy Collector, Faridpur, is appointed temporarily to have charge of the Sadar subdivision of that district.

Hooghly-Jessore. — No. 1387A.D.—19th September 1936.—Babu Bipul Chandra Chatarji, Deputy Magistrate and Deputy Collector, Serampore, Hooghly, is appointed to have charge of the Jhenidah subdivision of the Jessore district.

POLICE.

Khulna.—No. 10800A. — 14th September 1936.—Maulvi Arifuddin Ahmad Qadiri, Deputy Superintendent of Police, Khulna, is appointed temporarily to act as Superintendent of Police of that district.

ECCLESIASTICAL.

24-Parganas.—No. 10803A.—14th September 1936.—The services of the Reverend A. G. Cowham, Chaplain of Barrackpore, are placed at the disposal of the Government of the Punjab, with effect from the 30th October 1936, or any subsequent date on which he may be relieved.

Chittagong Hill Tracts.—No. 1353A.D.—17th September 1936.—Dr. James William Bottoms of Chandraghona Mission Hospital in the district of the Chittagong Hill Tracts is authorised, under section 6 of Act XV of 1872, to solemnize marriages between persons one or both of whom is or are a Christian or Christians and, under section 9 of the Act, to grant certificates of marriages between persons who are Native Christians.

2. He is also appointed, under Act VI of 1886, to be a Registrar of Births and Deaths for the district of the Chittagong Hill Tracts.

Confirmation.

POLICE.

Calcutta.—No. 10798A. — 14th September 1936.—Mr. Natha Singh, an officiating Assistant Commissioner of Police, Calcutta, is confirmed in that appointment, with effect from the 22nd June 1936, *vice* Rai Sahib Nepal Lall Mallick, retired.

Leave.

GENERAL.

Birbhum.—No. 10810A.—14th September 1936.—Mr. B. K. Guha, I.C.S., officiating District and Sessions Judge, Birbhum, is allowed leave on average pay for seven days, under rule 81 (*b*) (*ii*) of the Fundamental Rules, with effect from the 7th October 1936.

Hooghly.—No. 10893A. — 17th September 1936.—Maulvi Ali Reza, Deputy Magistrate and Deputy Collector, is allowed leave on average pay for four months, under rule 81 (*b*) (*ii*) of the Fundamental Rules, with effect from the 26th September 1936, or any subsequent date on which he may relinquish charge of his duties as a Commissioner of the Special Tribunal, Hooghly.

No. 10901A. — 17th September 1936. — Mr. T. J. Y. Roxburgh, C.I.E., I.C.S., is allowed leave for four months, viz., leave on average pay for two months and eleven days, under rule 81 (*b*) (*i*) of the Fundamental Rules, with effect from the 17th November 1936, and leave on half average pay for the remaining period, under rule 81 (*d*) of those Rules.

Tippera.—No. 1361A.D.—18th September 1936.—Mr. J. George, I.C.S., officiating District and Sessions Judge, Tippera, is allowed leave on half average pay for four months, under rule 81 (*d*) of the Fundamental Rules, with effect from the 31st October 1936.

Murshidabad.—No. 10922A.—18th September 1936.—Mr. R. W. Morde, Deputy Magistrate and Deputy Collector, Murshidabad, is allowed leave on average pay for sixteen days, under rule 81 (*b*) (*ii*) of the Fundamental Rules, with effect from the 2nd October 1936.

Dacca.—No. 10932A. — 18th September 1936.—Babu Rabindra Nath Basu, Deputy Magistrate and Deputy Collector, Narayanganj, Dacca, is allowed leave on average pay for thirteen days, under rule 81 (*b*) (*ii*) of the Fundamental Rules, with effect from the 5th October 1936.

24-Parganas.—No. 10988A. 18th September 1936. - Babu Shankar Nath Sen, Deputy Magistrate and Deputy Collector, 24-Parganas, is allowed leave on average pay for three days, under rule 81 (*b*) (*ii*) of the Fundamental Rules, with effect from the 15th October 1936.

Tippera.—No. 10991A. - - 18th September 1936.—Babu Shyama Charan Chatarji, Deputy Magistrate and Deputy Collector, Brahmanbaria, Tippera, is allowed leave on average pay for fifteen days, under rule 81 (*b*) (*ii*) of the Fundamental Rules, with effect from the 3rd October 1936.

Pabna.—No. 10996A. 18th September 1936.—Maulvi Muhammad Abdullah, Deputy Magistrate and Deputy Collector, Serajganj, Pabna, is allowed leave for four months, with effect from the 9th September 1936, namely, leave on average pay for eighteen days, under rule 81 (*b*) (*ii*) of the Fundamental Rules, and leave on half average pay for the remaining period, under rule 81 (*d*) of those Rules.

Faridpur.- -No. 11000A. - 18th September 1936. Babu Prabodh Chandra Mazumdar, Deputy Magistrate and Deputy Collector, Faridpur, is allowed leave on average pay for thirteen days, under rule 81 (*b*) (*ii*) of the Fundamental Rules, with effect from the 31st October 1936.

Chittagong.--No. 11003A. 19th September 1936. Babu Girija Bhusan Ghoshal, Deputy Magistrate and Deputy Collector, Chittagong, is allowed leave on average pay for seventeen days, under rule 81 (*b*) (*ii*) of the Fundamental Rules, with effect from the 31st October 1936.

24-Parganas.—No. 11020A.—21st September 1936.- Mr. E. G. Creek, I.C.S., Joint Magistrate and Deputy Collector, Diamond Harbour, 24-Parganas, is allowed leave on half average pay for six months, under rule 81(*d*) of the Fundamental Rules, with effect from the 24th August 1936.

Midnapore.—No. 11036A.- 21st September 1936.- Mr. A. K. Ghosh, I.C.S., Joint Magistrate and Deputy Collector, Midnapore, is allowed leave on average pay for three days, under rule 81 (*b*) (*ii*) of the Fundamental Rules, with effect from the 15th October 1936.

POLICE.

No. 10837A.—15th September 1936.- Mr. H. C. Hunt, I.P., has been granted by the High Commissioner for India an extension of leave on half average pay for four days.

Presidency Range. — No. 10935A. -- 18th September 1936. -Rai Bhola Nath Banarji Bahadur, officiating Deputy Inspector-General of Police, Presidency Range, is allowed leave on average pay for three months and twenty-nine days, under rule 81 (*b*) (*i*) of the Fundamental Rules, with effect from the 14th October 1936, or any subsequent date on which he may be relieved.

No. 11014A.—19th September 1936.—Mr. M. A. H. Maswood, I.P., Assistant Superintendent of Police, on probation, is allowed leave for fifteen days in extension of the leave granted to him under the orders of the 14th July 1936, viz., leave on average pay for thirteen days, under rule 81(*b*) (*ii*) of the Fundamental Rules, and leave on half average pay for the remaining period, under rule 81(*d*) of those Rules.

Calcutta.—No. 11039A.—21st September 1936.—Rai Bhupendra Nath Banarji Bahadur, Deputy Commissioner of Police, Calcutta, is allowed leave on average pay for twenty-two days, under rule 81(*b*) (*ii*) of the Fundamental Rules, with effect from the 31st October 1936.

ECCLESIASTICAL.

No. 11026A. 21st September 1936.—The Reverend Canon P. E. Lee has been granted by the High Commissioner for India an extension of leave on half average pay for six months.

E. N. BLANDY,

Chief Secy. to the Govt. of Bengal (offg.).

POLITICAL DEPARTMENT.

Political.

NOTIFICATIONS.

No. 1079P.P.—16th September 1936.—The following draft of a notification, which it is proposed to issue under sub-section (*a*) of section 12 of the Port Haj Committees Act, 1932 (XX of 1932), is published as required by sub-section (*1*) of section 23 of the said Act for information of all persons likely to be affected thereby, and notice is hereby given that the draft will be taken into consideration by the Governor in Council on or after the 13th October 1936.

Any objection or suggestion which may be sent to the Chief Secretary to the Government of Bengal by any person with respect to the said draft on or before the aforesaid date will be considered by the Governor in Council:—

Draft Notification.

In exercise of the powers conferred by sub-section (*a*) of section 12 of the Port Haj Committees Act, 1932 (XX of 1932), the Governor in Council is pleased to make the following rule in supersession of rule 20 of the Calcutta Port Haj Committee Rules, 1933, published with notification No. 13604P., dated the 2nd December 1933, and as subsequently amended by notification No. 1006P., dated the 23rd January 1934:—

Rule.

20. The term of office of the Chairman shall be for a period of one year from the date of approval of his election by the Local Government under sub-section (*3*) of section 11 of the Act or from the date of his appointment under sub-section (*2*) of that section, as the case may be, but he shall be eligible for re-election or re-appointment:

Provided that the term of office of the Chairman shall continue until a Chairman is elected and his election has been approved by the Local Government under sub-section (*3*) of section 11 of the Act or a Chairman is appointed under sub-section (*2*) of that section.

No. 14622P.—17th September 1936.—Whereas it appeared to the District Magistrate of Chittagong that the letting off of bombs or fireworks in Chittagong was likely to cause obstruction to the authorities responsible for the preservation of the public tranquillity and whereas he issued an order, dated the 28th September 1932, under section 144 of the Code of Criminal Procedure, 1898, directing all persons to abstain from letting off any bombs or fireworks within the police-stations of Kotwali, Double Moorings and Panchalaish:

And whereas it appears to the local Government that the conditions in Chittagong which led to the issue by the District Magistrate of the aforesaid order still continue and that the letting off of bombs or fireworks is likely to cause a danger to human life or safety:

Now, therefore, in exercise of the power conferred by section 144(*6*) of the Code of Criminal Procedure, it is hereby directed that the said order shall remain in force for a further period of two months, with effect from the 27th September 1936.

Birbhum.—No. 1149 P. D.—19th September 1936.—In exercise of the power conferred by section 24 of the Bengal Suppression of Terrorist Outrages Act, 1932 (Ben. Act XII of 1932), the Governor in Council is pleased to invest Babu Jyotish Chandra Chatarji, Sub-divisional Magistrate, Birbhum, with the powers of a Special Magistrate under the said Act.

E. N. BLANDY,

Chief Secy. to the Govt. of Bengal (offg.).

Jails.

NOTIFICATION.

No. 3017P.J. — 19th September 1936.—Major S. L. Patney, I.M.S., has been granted by the High Commissioner for India a further extension of leave on half average pay for forty-two days.

J. R. BLAIR,

Addl. Secy. to the Govt. of Bengal.

POLICE DEPARTMENT.

Orders by the Inspector-General of Police, Bengal.

Calcutta. — No. 9947A. — 18th September 1936.—**Midnapore-Noakhali.**— The following probationary Court Inspectors are confirmed in their appointments with effect from the 11th September 1936:—

Babu Phani Bhushan Basu of Midnapore.

Maulvi Muhammad Mumtaz Ali of Noakhali.

J. C. FARMER,

Inspector-General of Police (offg.).

Calcutta Police Notifications.

Calcutta, the 18th September 1936.

The following draft of a notification, which with the previous sanction of the Governor in Council, the Commissioner of Police, Calcutta, proposes to issue under sub-section (*1*) of section 62 of the Calcutta Police Act, 1866 (Bengal Act IV of 1866), is hereby published for the information of persons likely to be affected thereby.

The draft will be taken into consideration on or after the 24th October 1936, and any objection or suggestion which may be received by the undersigned by that date will be duly considered:—

Draft Notification.

In exercise of the power conferred by clauses (*b*) and (*c*) of sub-section (*1*) of section 62 of the Calcutta Police Act, 1866 (Bengal Act IV of 1866), the Commissioner of Police, Calcutta, with the previous sanction of the Governor in Council, hereby makes the following amendment in the Rules for the Regulation of Traffic, etc., in the streets and public places of Calcutta and its suburbs, published under Calcutta Police Notification No. 134, dated the 6th January 1932, at pages 37-99, Part I of the *Calcutta Gazette*, dated the 14th January 1932:—

Amendment.

After rule 78G under sub-heading "(10) Larkins Lane" under the heading "(*b*) one way traffic" in Part II containing the Special Rules for the Regulation of Traffic, *substitute* the following for the existing rules:—

"78H. Vehicles shall be parked on Dacre's Lane from its junction with Crooked Lane to its junction with Esplanade Row East in a single line parallel to the kerb facing either North or South on the East side of the road only.

78I. Parking of vehicles shall be prohibited on both sides of the remaining portion of Dacre's Lane from its junction with Waterloo Street to its junction with Crooked Lane."

Calcutta, the 24th September 1936.

In exercise of the powers conferred by clause (*i*) of sub-section 2 of section 62A of the Calcutta Police Act, 1866, and clause (*i*) of sub-section 2 of section 39A of the Calcutta Suburban Police Act, 1866, I hereby prohibit any person from carrying any dagger, sword, spear, bludgeon, lathi, gun or other offensive weapon in any public place in the town or suburbs of Calcutta between the 1st November 1936 and the 31st October 1937, provided that the prohibition shall not extend to persons exempted under schedule I of the Indian Arms Rules, 1924, or holders of a permit granted by the Commissioner of Police in a prescribed form or to weapons covered by a license under the Arms Act.

L. H. COLSON,

Commissioner of Police, Calcutta.

JUDICIAL DEPARTMENT.

No. 11017A.

Powers.

No. 10818A.—15th September 1936. — So much of the orders contained in notification No. 9816A., dated the 26th August 1936, as relates to the investment of Maulvi Muhammad Fazlur Rahman, Deputy Magistrate, on probation, with first class powers, is cancelled.

Bakarganj.—No. 10840A. — 15th September 1936.—Maulvi M. Yusuf, Sub-Deputy Magistrate, on probation, Bakarganj, is vested with the powers of a Magistrate of the third class.

Chittagong.—No. 10878A.—16th September 1936.—Babu Praphulla Kumar Mukharji, Sub-Deputy Magistrate, Kutubdia, in the district of Chittagong, is vested with the powers of a Magistrate of the Second class.

E. N. BLANDY,

Chief Secy. to the Govt. of Bengal (offg.).

Appointments and Transfers.

24-Parganas.—No. 7013J.—16th September 1936.—In exercise of the powers conferred by sections 14 and 15 and the proviso to section 357 of the Code of Criminal Procedure, 1898 (Act V of 1898), the Governor in Council is pleased—

(*a*) to confer upon Babu Narendra Nath Sen the powers of a Magistrate of the third class, in the district of the 24-Parganas, for a period of three years from the 14th October 1936,

(*b*) to direct him to sit as a member of the Dum Dum bench in the said district, and

(*c*) to direct him to take down evidence in the English language.

Powers.

Tippera. — No. 7008J. — 15th September 1936.—In exercise of the powers conferred by section 14 of the Code of Criminal Procedure, 1898 (Act V of 1898), the Governor in Council is pleased to confer upon Babu Bhupendra Nath Ghosh, an Honorary Magistrate of the Comilla bench, the powers of a Magistrate of the second class, in the district of Tippera, for the period during which he has been directed to sit as a member of the said bench—(*a*) in respect to cases brought before the said Bench within the limits of the jurisdiction of the said Bench and (*b*) in respect to such cases as may be made over to him, when sitting singly, within the limits of the Sadar subdivision of the said district.

NOTIFICATIONS.

Dinajpur.—No. 6997J.—15th September 1936.—In exercise of the power conferred by section 65 of the Bengal Village Self-Government Act, 1919 (Bengal Act V of 1919), the Governor in Council is pleased to appoint the following members of the Hili union board within the Balurghat police-station in the Balurghat subdivision of the Dinajpur district, to be, during their term of office as such members, a union bench within the jurisdiction of the said union board for the purposes of that section:—

Rai Sahib Kumud Nath Das.
Babu Ashutosh Munshi.
Babu Aswini Kumar Saha.
Munshi Jaffar Ahamed.

Dinajpur.—No. 6998J.—15th September 1936.—In exercise of the power conferred by section 73 of the Bengal Village Self-Government Act, 1919 (Bengal Act V of 1919), the Governor in Council is pleased to appoint the following members of the Hili union board within the Balurghat police-station in the Balurghat subdivision of the Dinajpur district, to be, during their term of office as such members, a union court within the jurisdiction of the said union board for the purposes of that section:—

Rai Sahib Kumud Nath Das.
Babu Ashutosh Munshi.
Babu Aswini Kumar Saha.
Munshi Jaffar Ahamed.

Mymensingh.—No. 7000J.—15th September 1936.—In exercise of the power conferred by section 65 of the Bengal Village Self-Government Act, 1919 (Bengal Act V of 1919), the Governor in Council is pleased to appoint the following members of the union boards mentioned below, to be, during their term of office as such members, union benches within the jurisdiction of the union boards of which they are, respectively, members for the purposes of that section:—

Mymensingh district, Sadar south subdivision.

Kotwali police-station.

Kusthia union board.

Munshi Azumuddin Sarkar.
Munshi Shamseruddin Sarkar.
Babu Satish Chandra De Tarafdar.
Babu Girish Chandra De.

Akua union board.

Babu Satish Chandra Bhowmik.
Babu Ramesh Chandra Das.
Maulvi Md. Abdulla.
Maulvi Wafizuddin.
Maulvi Md. Abdul Majid.

Khagdahar union board.

Maulvi Md. Taleb Ali.
Maulvi Md. Akbar Ali.
Maulvi Md. Abed Ali Talukdar.
Maulvi Azmat Ali Ahmed.
Babu Sarat Chandra Nandi.

Dapunia union board.

Munshi Abbas Sarkar.
Munshi Md. Ismail.
Maulvi Md. Lokman Ali.
Babu Judhistir Chandra De.
Munshi Wayezuddin Ahammed.

Ghagra union board.

Munshi Hossain Ali Sarkar.
Munshi Amiruddin.
Babu Debendra Chandra De.
Munshi Abdul Gani Sarkar.

Bhabakhali union board.

Maulvi Md. Umed Ali.
Dr. Jaliluddin Ahmed.
Maulvi Abbas Ali.
Babu Sonatan Shaha.

Fulbaria police-station.

Puthijana union board.

Babu Asutosh Ray.
Babu Annada Prasad Gauguly.
Munshi Lal Mamud Sarkar.
Munshi Yar Mahammad.

Muktagacha police-station.

Baragram union board.

Munshi Mohshen Ali Master.
Munshi Saad Uddin Khan.
Babu Giriza Prassad Bal.
Munshi Sonaullah Sarkar.

Kheruajani union board.

Munshi Tamijuddin Ahmed.
Munshi Kalimuddin Sarkar.
Babu Lalit Mohan Chanda.
Munshi Newaj Ali Sarkar.
Abul Fate Ali Ashraf Khan.

Gaffargaon police-station.

Char Algi union board.

Maulvi Md. Ijjat Ullah.
Maulvi Amiruddin Ahmed.
Maulvi Md. Rahimuddin.
Maulvi Md. Mahabbat Ullah.

Neguair union board.

Babu Nagendra Chandra Ray.
Munshi Md. Abdul Helim Khan.
Munshi Md. Abdul Gafur Khan.
Maulvi Hafiz Fazlur Rahman Ranbhawali.

Trisal police-station.

Dhanikhola union board.

Maulvi Md. Osman Ali.
Maulvi Md. Ismail.
Babu Sarbananda Das Gupta.
Munshi Shamser Ali Khan.
Munshi Yakub Ali Mandal.

Bailar union board.

Munshi Md. Arfan Ali Sarkar.
Hazi Md. Hasmatulla Kazi.
Haji Md. Hussain Ullah.
Babu Kula Chandra Pandit.

Balipara union board.

Babu Jnaneswar Chakrabatti.
Babu Jogendra Nath Deb.
Maulvi Md. Abdul Hakim.
Munshi Md. Abdul Gani.

2. This notification will take effect from the date of first meeting of the reconstituted union boards at which a quorum is present.

Mymensingh.—No. 7001J.—15th September 1936.—In exercise of the power conferred by section 73 of the Bengal Village Self-Government Act, 1919 (Bengal Act V of 1919), the Governor in Council is pleased to appoint the following members of the union boards mentioned below, to be, during their term of office as such members, union courts within the jurisdiction of the union boards of which they are, respectively, members for the purposes of that section:—

Mymensingh district, Sadar south subdivision.

Kotwali police-station.

Kusthia union board.

Munshi Azumuddin Sarkar.
Munshi Shamseruddin Sarkar.
Babu Satish Chandra De Tarafdar.
Babu Girish Chandra De.

Akua union board.

Babu Satish Chandra Bhowmik.
Babu Ramesh Chandra Das.
Maulvi Md. Abdulla.
Maulvi Wafizuddin.
Maulvi Md. Abdul Majid.

Khagdahar union board.

Maulvi Md. Taleb Ali.
Maulvi Md. Akbar Ali.
Maulvi Md. Abed Ali Talukdar.
Maulvi Azmat Ali Ahmed.
Babu Sarat Chandra Nandi.

Dapunia union board.

Munshi Abbas Sarkar.
Munshi Md. Ismail.
Maulvi Md. Lokman Ali.
Babu Judhistir Chandra De.
Munshi Wayezuddin Ahammed.

Ghagra union board.

Munshi Hossain Ali Sarkar.
Munshi Amiruddin.
Babu Debendra Chandra De.
Munshi Abdul Gani Sarkar.

Bhabakhali union board.

Maulvi Md. Umed Ali.
Dr. Jaliluddin Ahmed.
Maulvi Abbas Ali.
Babu Sonatan Shaha.

Fulbaria police-station.

Puthijana union board.

Babu Asutosh Ray.
Babu Annada Prasad Ganguly.
Munshi Lal Mamud Sarkar.
Munshi Yar Mahammad.

Muktagacha police-station.

Baragram union board.

Munshi Mohshen Ali Master.
Munshi Saad Uddin Khan.
Babu Giriza Prassad Bal.
Munshi Sonaullah Sarkar.

Kheruajani union board.

Munshi Tamijuddin Ahmed.
Munshi Kalimuddin Sarkar.
Babu Lalit Mohan Chanda.
Munshi Newaj Ali Sarkar.
Abul Fate Ali Ashraf Khan.

Gaffargaon police-station.

Char Algi union board.

Maulvi Md. Ijjat Ullah.
Maulvi Amiruddin Ahmed.
Maulvi Md. Rahimuddin.
Maulvi Md. Mahabbat Ullah.

Neguair union board.

Babu Nagendra Chandra Ray.
Munshi Md. Abdul Helim Khan.
Munshi Md. Abdul Gafur Khan.
Maulvi Hafiz Fazlur Rahman Ranbhawali.

Trisal police-station.

Dhanikhola union board.

Maulvi Md. Osman Ali.
Maulvi Md. Ismail.
Babu Sarbananda Das Gupta.
Munshi Shamser Ali Khan.
Munshi Yakub Ali Mandal.

Bailar union board.

Munshi Md. Arfan Ali Sarkar.
Hazi Md. Hasmatulla Kazi.
Haji Md. Hussain Ullah.
Babu Kula Chandra Pandit.

Balipara union board.

Babu Jnaneswar Chakrabatti.
Babu Jogendra Nath Deb.
Maulvi Md. Abdul Hakim.
Munshi Md. Abdul Gani.

2. This notification will take effect from the date of first meeting of the reconstituted union boards at which a quorum is present.

N. G. A. EDGLEY,
Secy. to the Govt. of Bengal.

LOCAL SELF-GOVERNMENT DEPARTMENT.

NOTIFICATIONS.

Minister-in-charge: The Hon'ble Sir Bijoy Prasad Singh Roy, Kt.

Faridpur-Dacca.—No. 7374L.S.-G.—18th September 1936.—It is hereby notified under section 5 of the Bengal Village Self-Government Act, 1919 (Bengal Act V of 1919), that mauza Mirjapur (jurisdiction list No. 174), which was transferred from thana Char Bhadrasan, in the district of Faridpur, to thana Nawabganj, police-station Dohar, in the district of Dacca (jurisdiction list No. 265), by notification No. 5891 Pl., dated the 14th December 1928, published at page 2544, Part I of the *Calcutta Gazette*, dated the 20th idem, having been transferred back to thana Char Bhadrasan by notification No. 6366 Pl., dated the 12th December 1932, published at page 2048, Part I of the *Calcutta Gazette*, dated the 22nd December 1932, continues to remain within Char Jhaukanda union board constituted in notification No. 4168 L.S.-G., dated the 7th December 1926, published at page 1898, Part I of the *Calcutta Gazette*, dated the 16th December 1926.

2. This cancels notification No. 2865-L.S.-G., dated the 25th April 1936.

Hooghly.—No. 7256M. — 15th September 1936.—In exercise of the power conferred by section 506 of the Bengal Municipal Act, 1932 (Bengal Act XV of 1932), the Government of Bengal (Ministry of Local Self-Government) are pleased to confirm the by-laws framed by the Commissioners of the Baidyabati Municipality, in the district of Hooghly, under section 392 of the said Act and published for information under notification No. 4178M., dated the 8th May 1936.

Pabna.—No. 7258M. — 15th September 1936.—In exercise of the power conferred by section 415 of the Bengal Municipal Act, 1932 (Bengal Act XV of 1932), the Government of Bengal (Ministry of Local Self-Government) are pleased to extend the provisions of that section to the Serajganj Municipality in the district of Pubna.

Calcutta.—No. 7299M.—17th September 1936.—Whereas the Corporation of Calcutta have, by a resolution passed at their meeting held on the 24th August 1936, made a recommendation, under clause (*xviii*) of section 477 of the Calcutta Municipal Act, 1923 (Bengal Act III of 1923), that the payment of a grant by the Corporation to the Harijan Baby Clinic at 90-B, Hazra Road, Calcutta, is a matter likely to promote the public health:

Now, therefore, the Government of Bengal (Ministry of Local Self-Government), in exercise of the power conferred by the said clause, are pleased to declare that the said matter is one which is likely to promote the public health within the meaning of the said clause.

Tippera.—No. 7305M.—17th September 1936.—In exercise of the power conferred by section 58(*2*) of the Bengal Municipal Act, 1932 (Bengal Act XV of 1932), the Government of Bengal (Ministry of Local Self-Government) are pleased to appoint Mr. P. W. Barke to be a Commissioner of the Chandpur Municipality, in the district of Tippera, *vice* Mr. S. Manmasseh resigned.

Birbhum.—No. 7381L.S.-G.—18th September 1936.—In exercise of the power conferred by section 10A of the Bengal Local Self-Government Act of 1885 (Bengal Act III of 1885), the Government of Bengal (Ministry of Local Self-Government) are pleased to determine that the Muhammadan community in the area under the authority of the district board of Birbhum and the local boards of Sadar and Rampurhat subdivisions of the Birbhum district shall be deemed to be a minority community for the purposes of that section.

Nadia.—No. 7383M.—19th September 1936.—In exercise of the power conferred by section 506 of the Bengal Municipal Act, 1932 (Bengal Act XV of 1932), the Government of Bengal (Ministry of Local Self-Government) are pleased to confirm the by-laws framed by the Commissioners of the Nabadwip Municipality, in the district of Nadia, under section 417 of the said Act and published for information under notification No. 2900M., dated the 27th April 1936.

Hooghly.—No. 7385M.—19th September 1936.—In exercise of the power conferred by section 506 of the Bengal Municipal Act, 1932 (Bengal Act XV of 1932), the Government of Bengal (Ministry of Local Self-Government) are pleased to confirm the by-laws framed by the Commissioners of the Baidyabati Municipality, in the district of Hooghly, under section 375 (*a*) of the said Act and published for information under notification No. 4415M., dated the 15th May 1936.

No. 18T.L.S.-G.—17th September 1936.—The following draft of an amendment, which, in exercise of the power conferred by section 12 of the Bengal Motor Vehicles Tax Act, 1932 (Bengal Act I of 1932), the Government of Bengal (Ministry of Local Self-Government) propose to make in the rules published under notification No. 5859L.S.-G., dated the 31st October 1933, at pages 1575-1593 of Part I of the *Calcutta Gazette*, dated the 9th November 1933, is published for information.

2. Any objection or suggestion with respect to the draft amendment which may be received by the undersigned on or before the the 27th September 1936 will be duly considered:—

Draft amendment.

From rule 30 of the said rules *delete* clause (*g*).

2. This will take effect from the 1st October 1936.

Burdwan.—No. 7420M. — 21st September 1936.—The following draft of a notification, which the Government of Bengal (Ministry of Local Self-Government) propose to issue under section 20 of the Bengal Municipal Act, 1932 (Bengal Act XV of 1932), is published for the information of persons likely to be affected thereby.

2. The draft will be taken into consideration on or after the 5th December 1936, and any objection or suggestion with respect thereto which may be received by the undersigned through the District Magistrate before that date will be duly considered:—

Draft notification.

In exercise of the power conferred by section 20 of the Bengal Municipal Act, 1932 (Bengal Act XV of 1932), the Government of Bengal (Ministry of Local Self-Government), after consideration of the views of the Commissioners of the Burdwan Municipality at a meeting, are pleased to direct that the following shall be the revised boundaries of all the wards of that municipality in supersession of the boundaries of the said wards specified in notification No. 4972 L. S.-G., dated the 14th December 1921, namely:—

Ward A.

North—A line drawn from the municipal boundary pillar on the Rayan Road beyond Bhaluka Nala to Subjala Bridge on the Katwa Road and from thence towards north-west corner of Kamaldighi up to where it cuts the municipal main drain.

West—A line drawn from the point where the north boundary line cuts the main drain to the junction of Baburbagh and Bahirsarbamangola Road and from thence southward through the junction of Fraser Avenue and Distillery Road along the western side of Distillery Road and along the western side of Paiknarapara Lane No. I to Sir B. C. Road and then eastward along the north side of Sir B. C. Road to Pheel Khana junction and thence along the Pheel Khana Lane up to the junction of Radhanagar Road and then southward along the western side of main drain to the north bank of river Banka.

South—A line drawn from the point where the main drain falls into the river Banka along the north edge of river Banka up to where it cuts the East Indian Railway Bridge over the Banka river.

East—A line drawn from the point where the southern boundary line cuts the East Indian Railway Bridge towards north up to the municipal boundry pillars over Rayan Road beyond Bhaluka Nala.

Ward B.

East—A line drawn from the point where the municipal northern boundary line cuts the main drain to the junction of Baburbagh and Bahirsarbamangala Road and from thence southward through the junction of Fraser Avenue and Distillery Road and along the western side of Distillery Road and along the western side of Paikmarapara Lane No. I to Sir B. C. Road and then eastward along the north side of Sir B. C. Road to Pheel Khana Lane junction and thence along the Pheel Khana Lane up to the junction of Radhanagar Road and then southward along the west side of municipal main drain to the north bank of river Banka.

South—A line drawn from the point where the main drain falls into the river Banka, along the northern edge of river Banka up to the northern end of Alamgunj Bridge over river Banka.

West—A line drawn from the Alamgunj Bridge over river Banka towards north along the west side of Raj College Road up to the junction of Raj College Road and Sir B. C. Road and thence westward along the north side of Sir B. C. Road up to Dhobapara Road junction and thence northward along the eastern side of Dhobapara Road up to the junction of Dhobapara Road and the road on the north side of Krishnasagar and then towards west along the Krishnasagar North Road up to the gate of Ramna garden and thence towards north along the road within Ramna garden up to the point where it cuts the northern boundary line of the municipality after crossing the Grand Trunk Road.

North—A line drawn from the point where the western boundary line of Ward B cuts the north boundary line of the municipality, up to the point where the municipal main drain cuts the north boundary line of the municipality.

Ward C.

East—A line from the Alamgunj Bridge over river Banka towards north along the west side of Raj College Road up to the junction of Raj College Road and Sir B. C. Road and then westward along the north side of Sir B. C. Road up to Dhobapara Road junction and thence northward along the eastern side of Dhobapara Road up to the junction of Dhobapara Road and the road on the north side of Krishnasagar and then towards west along Krishnasagar North Road up to gate of Ramna garden and thence towards north along the road within Ramna garden up to the point where it cuts the north boundary line of the municipality after crossing the Grand Trunk Road.

South—A line drawn from the Alamgunj Bridge over Banka towards west along the northern bank of river Banka up to the municipal boundary pillar east of Baradowari garden.

West—A line drawn from the municipal boundary pillar on the bank of Banka on the western municipal boundary line northward up to north-west corner of Kamol Dighi.

North—A line drawn from the north-west corner of Kamol Dighi towards east along the north boundary line of the municipality up to where it joins the north-western corner of Ward B.

Ward D.

East—A line drawn from the junction of Jhurjhuri Nala and river Banka towards south along the western side of Jhurjhuri Nala through Jhurjhuri Nala culvert under Par-Birhata Road up to north boundary of plot No. 194 Bangpur, jurisdiction list 32, and thence westward along the north boundary of plots Nos. 196 and 199 to meet road No. 181 and thence southwards along the west side of road No. 181 of Bangpur till it reaches the Eden Canal.

South—A line drawn from the point where the road No. 181 Bangpur meets the Eden Canal westward along the bank of Eden Canal till it meets the Edilpur Road Bridge over the Eden Canal in Fakirpur, jurisdiction list 25, and then southwards along the eastern limit of Edilpur Road till it reaches the Damudar embankment at the south corner of plot No. 687 of mauza Edilpur, jurisdiction list 24, and thence along the Damudar embankment to reach the municipal boundary pillar at Ajgaibitola in mauza Khargeswar, jurisdiction list 23, at the south-east corner of plot No. 40.

West—A line drawn from the municipal boundary pillar at Ajgaibitola to the municipal boundary pillar on the bank of Banka leaving out Baradowari garden.

North—A line drawn from the municipal boundary pillar on the bank of Banka leaving Baradowari garden along the northern edge of river Banka up to the junction of Jhurjhuri Nala with river Banka.

Ward E.

West—A line drawn from the junction of Jhujhuri Nala and river Banka towards south along the western side of Jhurjhuri Nala through Jhurjhuri culvert under Par-Birhata Road up to north boundary of plot No. 194 Bangpur, jurisdiction list 32, and thence westward along the northern boundary of plot Nos. 196 and 199 to meet road No. 181 and thence southward along the west side of road No. 181 of Bangpur till it reaches the Eden Canal.

East—A line drawn from the East Indian Railway Bridge over Banka towards south to the pillar upon Grand Trunk Road opposite to Babu Lolit Mohan Singha's tank and thence to the north-east corner of race course and then along the north-west boundary of the race course (plots Nos. 1392 and 1387 of Balidanga jurisdiction list 35) up to the south-east corner of plot No. 1386 of the aforesaid mauza and thence along the north boundary of mauza Bacharhat, jurisdiction list 14, till it meets the road No. 607 and crossing it southward along the eastern side of plot No. 847 of Bacharhat up to the south-east corner of Hiralal Bagan plot No. 198 Jagatbere and thence towards west along the north boundary of mauza Bacharhat, jurisdiction list 41, up to the north-west corner of plot No. 1 and thence southward along the western boundary of Bacharhat till it meets the Eden Canal embankment at the south-western corner of plot No. 216 of Bacharhat and thence westward along the embankment which forms the southern boundary of Mirchoba, jurisdiction list 33, up to the plot No. 217 crossing the Eden Canal and Damudar embankment and thence along the western boundary of plots Nos. 254 and 246 of Bacharhat up to the water edge of river Damudar.

South—A line drawn from the point on the water edge of Damudar river where eastern boundary ends westward along the water edge of river Damudar till it meets plot No. 241 of Bangpur, jurisdiction list 32, then northward along the western boundary of plot Nos. 240, 778 and 785 crossing the Eden Canal and passing along the western boundary of plots Nos. 740, 837, 705, 707 and 711 and thence through the plot No. 712 to the south-west corner of the tank Malikpukur, plot No. 635 of the said village, and thence northward up to the northern boundary of mauza Bangpur, jurisdiction list 32, and thence along the eastern boundary of plot No. 639 of the said mauza and thence along the north boundary of Bangpur up to the south-east corner of Kajaldaha tank (plot No. 627) of Bangpur and thence along the southern ails of plots Nos. 632 and 630 and along the north boundary of plots Nos. 629, 628, 622, 194, 196 and 199 to meet the road No. 181 of Bangpur and thence southward along the western side of road No. 181 Bangpur and thence up to where it meets Eden Canal.

North—The point where the Jhurjhura Nala meets the Banka river eastward along the northern bank of river Banka up to the East Indian Railway Bridge over Banka river.

Bakarganj.—No. 7452L.S.-G.—22nd September 1936.—In exercise of the powers conferred by clauses (*a*) and (*b*) of section 31 of the Cattle-Trespass Act, 1871 (Act I of 1871), and in modification of orders contained in clauses (*a*) and (*b*) of notification No. 3171-T.M., dated 16th August 1913, and in clauses (*a*) and (*b*) of notification No. 1428 L.S.-G., dated 18th May 1914, the Government of Bengal (Ministry of Local Self-Government) are pleased to—

(*i*) transfer to the union board in the district of Bakarganj, named below, all the functions of the Magistrate of that district, under Chapters II and III of the said Act, I of 1871, in respect of all pounds within the local area, subject to the jurisdiction of said union board, and

(*ii*) direct that the whole of the surplus accruing under section 18 of the said Act, I of 1871, in the areas within the jurisdiction of the said union board in the district of Bakarganj, named below, shall be placed to the credit of the union fund constituted for the said union board—

District Bakarganj, Perojpur subdivision,

Patharghata police-station.

Char-Duani union board.

Medical.

Minister-in-charge: The Hon'ble Sir Bijoy Prasad Singh Roy, Kt.

Murshidabad. — No. 12T. Medl. — 14th September 1936.—Lt.-Col. N. C. Kapur, I.M.S., on return from leave ex-India, is appointed as Civil Surgeon, Murshidabad, *vice* Lt-Col. P. Banerji, I.M.S., transferred.

Burdwan-Calcutta. —No. 13T. Medl.—14th September 1936.—Capt. E. H. Lossing, I.M.S., Civil Surgeon, Burdwan, on relief, is placed on general duty at the Medical College Hospitals, Calcutta.

Calcutta.—No. 12 T.Medl.—17th September 1336.—Dr. Sudhendu Kumar Roy, officiating 4th Assistant Chemical Examiner to the Government of Bengal, is granted earned leave for the period from the 19th September 1936 to the 18th October 1936, under rule 10 of the Bengal Services Revision of Leave Rules 1934.

Calcutta.—No. 13 T.Medl.—17th September 1936.—Temporary Assistant Surgeon Dr. Sudhansu Kumar Ganguly, on supernumerary duty at the Medical College Hospitals, Calcutta, is appointed to act as 4th Assistant Chemical Examiner to the Government of Bengal, during the absence, on leave, of Dr. Sudhendu Kumar Roy, or until further orders.

Calcutta.—No. 19 T.Medl.—17th September 1936.—Dr. Pashupati Basu, a Demonstrator of Anatomy, Medical College, Calcutta, is granted earned leave for thirty-one days, under rule 10 of the Bengal Services (Revision of Leave) Rules, 1934, in extension of the leave already granted to him in notification No. 3014Medl., dated the 17th July 1936.

Calcutta.—No. 20 T.Medl.—17th September 1936.—Dr. K. M. Lutfar Rahman, on supernumerary duty at the Medical College Hospitals, Calcutta, is appointed to act as a Demonstrator of Anatomy, Medical College, Calcutta, with effect from the 16th July 1936, *vice* Dr. Pashupati Basu, granted leave.

Calcutta.—No. 21 T.Medl.—17th September 1936.—Dr. K. M. Lutfar Rahman, officiating Demonstrator of Anatomy, Medical College, Calcutta, on relief, is placed on supernumerary duty at the Medical College Hospitals, Calcutta, with effect from the 4th August 1936.

NOTIFICATION.

The Charitable Endowments Act, 1890.

Minister-in-charge: The Hon'ble Sir Bijoy Prasad Singh Roy, Kt.

No. 3755Medl.—22nd September 1936.—Whereas by notification No. 873T.M., dated the 25th June 1901, published at pages 824-25, Part I of the *Calcutta Gazette*, dated the 3rd July 1901, it was notified that the Lieutenant-Governor of Bengal in exercise of the powers conferred by sections 4 and 5 of the Charitable Endowments Act, 1890, did thereby order and direct that the Government securities and the sum in cash of which the particulars are contained in the First Schedule thereunder written should as and from the date of the said recited notification vest and be thenceforth vested in the Treasurer of Charitable Endowments for the territories subject to the Government of Bengal and be held by him and his successors subject to the provisions of the said Charitable Endowments Act and the rules from time to time framed thereunder by the Governor-General in Council upon trust to apply the same or income thereof to the endowment and maintenance of a permanent fund to be called the "Walter Thompson Female Scholarship Fund" in accordance with the provisions in that behalf contained in the scheme of which particulars are contained in the Second Schedule thereunder written, and it was thereby further notified that the said scheme should come into operation on the vesting of the said property in the said Treasurer of Charitable Endowments:

AND WHEREAS accumulations amounting to Rs. 500 having resulted from the surplus interest of the securities vested by the said recited notification the same was invested in the purchase of securities and the said securities were by notification No. 873T.M., dated the 25th June 1901, published at pages 824-25, Part I of the *Calcutta Gazette*, dated the 3rd July 1901, vested in the said Treasurer of Charitable Endowments upon the same trusts as are declared by the said first recited notification of and concerning the said Government securities and cash therein comprised from the date of the first publication of the said second recited notification:

AND WHEREAS further accumulations have resulted of the surplus interest of the securities vested by the said first and second recited notifications:

AND WHEREAS it has been found that the actual income arising out of the said securities is much in excess of what is required for the payment of a scholarship of Rs. 7-8 per mensem as provided in the Second Schedule to the said first recited notification:

AND WHEREAS it is provided in clause 3 of the Second Schedule to the said first recited notification that "the surplus income and surplus cash balance shall be applied at the discretion of the Trustee in defraying any necessary expenses connected with the trust or in increasing the value of the said scholarship or in any other way consistent with the declared object of the Fund":

AND WHEREAS Superintendent, Campbell Medical School, the present Administrator of the said Fund, has applied for the modification of the said scheme set out in the Second Schedule to the said first recited notification to give effect to the wishes of the donor:

AND WHEREAS the said scheme has been modified accordingly and is set out in the Second Schedule hereunder written:

AND WHEREAS it is the opinion of the Government of Bengal that the scheme as modified is consistent with the declared object of the Fund:

AND WHEREAS the further accumulations have been invested in the purchase of securities the particulars whereof are set out in the First Schedule hereunder written and it has been resolved that the said securities shall be vested in the said Treasurer of Charitable

Endowments upon the trusts set out in the scheme set forth in the Second Schedule hereunder written:

IT IS HEREBY NOTIFIED that the Government of Bengal (Local Self-Government (Medical), Department), in exercise of the powers conferred by sections 4 and 5 of the Charitable Endowments Act, 1890, upon the application of and with the concurrence of the said Superintendent, Campbell Medical School, the present Administrator of the said Fund, doth hereby order and direct that the securities the particulars of which are contained in the First Schedule hereunder written shall as from the publication of this notification vest and be henceforth vested in the Treasurer of Charitable Endowments for the territories subject to the Government of Bengal to be held by him and his successors (subject to the provisions of the Charitable Endowments Act, 1890, and the rules from time to time to be framed by the Governor-General in Council) upon trust to hold the said securities as well as the securities vested in the said Treasurer of Charitable Endowments by the said recited notifications, dated the 25th June 1901, and No. 3336 Medl., dated the 29th November 1904, and to apply the same property or the income thereof to the endowment and maintenance of the Fund called The Walter Thompson Female Scholarship Fund in accordance with the trusts in that behalf set out in the scheme set forth in the said Second Schedule hereunder written:

AND IT IS HEREBY FURTHER NOTIFIED that the said scheme as hereby modified shall come into operation on the vesting of the securities mentioned in the First Schedule above referred to in the Treasurer of Charitable Endowments.

The First Schedule above referred to:

Stock of 3½ per cent. loan of 1865 for Rs. 1,900 and stock of 3½ per cent. loan of 1900-01 for Rs. 1,000 held by the Reserve Bank of India.

The Second Schedule above referred to.

1. The Endowment shall be called in memory of the late Walter Thompson of Beheea the "Walter Thompson Female Scholarship Fund" and its object shall be the establishment and maintenance of three scholarships of Rs. 10 each per mensem to be called the "Walter Thompson Female Scholarships" tenable for two years and awardable every year in the month of April to three female students at the Campbell Medical School, Sealdah, who shall pass the annual examination at the said school or if there be no such students eligible therefor or if the number of students so eligible falls short of three then in the month of June to three newly admitted female students of the said school holding qualification certificates or such number of such students as may be required to make up the number of three. The Superintendent for the time being of the school shall elect the recipient of such scholarship and in determining the eligibility of any student shall consider in addition to her other qualifications the student's conduct and as far as possible her parents' or guardian's pecuniary position. No student shall be elected who shall not bear a good moral character. The monthly payment to be made to any recipient of the scholarships shall cease upon the death of such recipient. The Government of Bengal shall have power from time to time to alter the mode of election of the recipients of the scholarships.

2. The Trustee to be appointed under section 5(*1*) of the Charitable Endowments Act, 1890, to administer the property vested by the foregoing notification shall be the Superintendent for the time being of the said Campbell Medical School.

3. So much of the income to be derived from the securities mentioned in the notifications, dated the 25th June 1901, and No. 3336Medl., dated the 29th November 1904, and in the foregoing notification as may from time to time be necessary shall be paid by the Treasurer of Charitable Endowments in whom such securities are vested by such notifications to the Superintendent for the time being of the said Campbell Medical School as such Trustee as aforesaid and on receipt thereof the said Trustee shall pay thereout the scholarships hereinbefore directed. The surplus income and surplus cash balance shall be applied at the discretion of the Trustee in defraying any necessary expenses connected with the Trust or in increasing the value of the said scholarships or in any other way consistent with the declared object of the Fund and shall be paid to the said Trustee by the said Treasurer as and when the same may be available and which may be required by the Trustee for any of those purposes.

Public Health.

NOTIFICATIONS.

No. 3696P.H.—19th September 1936.—For the purposes of the Paris Sanitary Convention, 1926, and with reference to rule 1 (*5*) of the rules framed under section 6, subsection (*1*), clause (*p*) of the Indian Ports Act, 1908 (Act XV of 1908), and published in Marine Department notification No. 16Mne., dated the 6th March 1917, the Governor in Council is pleased to declare Madras to be an infected port on account of cholera.

Minister-in-charge: The Hon'ble Sir Bijoy Prasad Singh Roy, Kt.

24-Parganas.—No. 3740P.H.—22nd September 1936.—Under rule 7 of the Local Authorities Loans Rules, 1915, as subsequently amended, it is hereby notified for general information that the Government of Bengal (Ministry of Public Health) intend to sanction the following application from the Commissioners of the Halisahar Municipality in the district of the 24-Parganas for a loan of Rs. 46,000 from Government bearing interest at the rate of 3¾ per cent. per annum and repayable in twenty annual instalments of Rs. 3,310-4-2 each for the water-supply scheme of the municipality unless good reasons are shown to the contrary within one month from the date of publication of this notification.

Application from the Commissioners of the Halisahar Municipality for a loan of Rs. 46,000.

The work or works for which the loan is required and the estimate of the cost thereof.	The amount which it is proposed to borrow.	The fund or funds on the security of which it is proposed to borrow.	The law or laws under which the said fund or funds is or are levied, received or held.	Receipt of loan. (a) The period for which the loan is required.	(b) The rate of interest at which it is proposed to borrow.	(c) The number of instalments in which it is proposed that the loan should be taken.	(d) The amount of each instalment.	(e) The date proposed for receiving each such instalment.	Repayment of loan. (f) The number of instalments in which the loan is repayable and the dates of payment thereof.	(g) Amount of each instalment.
1	2	3	4	5	6	7	8	9	10	11
Water-supply scheme—Rs. 67,000.	Rs. 46,000.	Municipal Fund.	Act XV of 1932.	Twenty years.	3½ per cent. per annum.	Single instalment.	Rs. 46,000.	2nd January 1937.	Twenty instalments—2nd January every year commencing from 2nd January 1938.	Rs. 3,810-1-2.

Financial position of the local body.

Revenue (details for each of the preceding three years). Sources from which the revenue is derived.	Amount for— 1933-34.	1934-35.	1935-36.	Expenditure (details for each of the preceding three years). Objects on which the expenditure is incurred.	Amount for— 1933-34.	1934-35.	1935-36.
12	13	14	15	16	17	18	19
	Rs.	Rs.	Rs.		Rs	Rs.	Rs.
(a) Municipal rates and taxes.	24,505	31,833	32,762	(1) General administration and collection charges.	3,850	7,589	3,476
(b) Realization under special Acts.	207	264	148	(2) Public safety	660	970	657
(c) Revenue derived from municipal property and powers apart from taxation.	7,699	7,750	8,279	(3) Public health and convenience (excluding expenditure from loan funds and from grants other than ordinary).	20,010	24,442	26,833
				(4) Public instruction	2,427	2,780	2,637
(d) Grants and contributions for general and special purposes (ordinary).	845	486	1,099	(5) Miscellaneous	1,568	1,931	6,351
(e) Miscellaneous ..	199	4,740	4,372	(6) Repayment of loan	Nil	Nil	Nil
Total Ordinary Income	33,505	44,073	49,651	Total Ordinary Expenditure ..	34,515	37,672	39,957
(f) Extraordinary and debt	1,800	510	451	(7) Extraordinary and debt excluding repayment of loan.	2,300	10	6,537
(g) Receipt of abnormal character.	Nil	Nil	Nil	(8) Expenditure from loan funds and from grants included under the head "Receipts of abnormal character."	Nil	Nil	Nil
Total ..	34,505	44,583	47,302	Total ..	36,815	37,672	46,494
Opening balance ..	5,320	3,010	9,921	Closing balance ..	3,010	9,921	10,729
Grand Total ..	39,825	47,593	57,223	Grand Total ..	39,825	47,593	57,223

The normal surplus may be expected in future, i.e., the difference between the average ordinary income and the average ordinary expenditure calculated on the figures in columns 13 to 15 and 17 to 19, respectively.	Remarks.
20	21
Rs. 4,032.	Out of Rs. 6,537 shown in column 19, a sum of Rs. 6,037 was invested in postal cash certificates and as such the said sum may be considered to be a surplus. Taking this amount into consideration the figure in column 20 would be more.

Details under heads (a), (b), (c) and (d) have already been stated in this office letters No. 556, dated the 29th August 1935 and No. 474, dated the 5th July 1936.

24-Parganas.—No. 3741P.H.—22nd September 1936.—In pursuance of rule 8 of the rules for the preparation, publication and execution of projects for water-supply, sewerage or drainage by municipal authorities, it is hereby notified for general information that the scheme for the supply of water to the Halisahar Municipality, has been approved by the Government of Bengal (Ministry of Public Health), and that the particulars of the said scheme are as follows:—

1. (*a*) The water-supply will be derived from tube-wells belonging to the Hukumchand Jute Mills who will pump and deliver a supply not less than 75,000 gallons and not more than 100,000 gallons per day into the municipal mains. The municipality will lay their own distribution pipes varying in sizes from 8″ to 2″ diameters along different roads in the town. The supply will be given through 92 standposts and a limited number of house connections. The principal water main will be along the Ghosepara Road with 19 branches leading to all important centres of the inhabited area of the town. The total length of pipe lines will be about 55,755 feet.

(*b*) The estimated cost of the scheme is Rs. 67,000 to be financed as follows:—

(*1*) Municipal contribution—Rs. 13,000.

(*2*) Fees for house connections—Rs. 8,000.

(*3*) Loan from Government—Rs. 46,000.

(*c*) and (*d*) The cost of maintenance, which is estimated at Rs. 8,210 annually, will be met from the water-rate fund of the municipality.

(*e*) A loan of Rs. 46,000 from Government is required for the scheme by the municipality, to be repaid in twenty years in equal yearly instalments of Rs. 3,310-4-2 each.

2. The scheme will be taken into consideration on or after the 1st November 1936, and any objection or suggestion with regard thereto, which may be received by the undersigned before that date, will be duly considered.

G. S. DUTT,

Secy. to the Govt. of Bengal.

Orders by the Surgeon-General with the Government of Bengal.

No. 21912.—2nd September 1936.—The following eleven Sub-Assistant Surgeons are promoted to the selection grade on a pay of Rs. 200 a month, with effect from the dates noted against their names:—

1. Sub-Assistant Surgeon Dr. Rajeswar Sen—6th April 1935.
2. Sub-Assistant Surgeon Dr. Nabin Chandra Das—16th April 1935.
3. Sub-Assistant Surgeon Dr. Bipin Behari Das—16th May 1935.
4. Sub-Assistant Surgeon Dr. Abinash Chandra Das Gupta—16th July 1935.
5. Sub-Assistant Surgeon Dr. Birendra Nath Ghosh—14th August 1935.
6. Sub-Assistant Surgeon Dr. Md. Hossainuddin—16th August 1935.
7. Sub-Assistant Surgeon Dr. Jnanadananda Das Gupta—7th September 1935.
8. Honorary Jamadar Sub-Assistant Surgeon Dr. Yeu Singh—10th October 1935.
9. Sub-Assistant Surgeon Dr. Surendra Nath Bhattacherjee—22nd November 1935.
10. Sub-Assistant Surgeon Dr. Hem Chandra Das Gupta—20th December 1935.
11. Sub-Assistant Surgeon Dr. Mano Ranjan Ganguly—16th May 1935.

D. P. GOIL, MAJOR-GENL., I.M.S.,

Surgn.-Genl. with the Govt. of Bengal.

Orders by the Director of Public Health, Bengal.

No. 12966A.—18th September 1936.—Babu Narendra Krishna Chattarji, Assistant Analyst, Calcutta Public Health Laboratory, is allowed leave on average pay for a period of twenty-one days, with effect from the 21st September 1936, or any subsequent date on which he may avail himself of it, under rule 81(*b*)(*ii*) of the Fundamental Rules.

No. 13064A.—21st September 1936.—Babu Sudhir Kumar Das, Assistant Analyst, Public Health Laboratory, Calcutta, is allowed leave on average pay for a period of two months, with effect from the 1st October 1936, under rule 81 (*b*) (*ii*) of the Fundamental Rules.

S. N. SUR, M.B., D.P.H., D.T.M.,

Director of Public Health, Bengal (offg.).

EDUCATION DEPARTMENT.

NOTIFICATIONS.

Minister-in-charge: The Hon'ble Khan Bahadur M. Azizul Haque.

Dacca Divn.—No. 3661T.Edn.—15th September 1936.—Mr. Kshetrapal Das Ghosh, officiating Second Inspector of Schools, Dacca Division, is appointed to act as Inspector of Schools of the Division, in addition to his own duties, with effect from the 18th September 1936, or any subsequent date on which he takes over charge during the absence, on leave, of Khan Bahadur Maulvi Abul Hashem Khan Chowdhury, or until further orders.

Calcutta. — No. 3675T.Edn. — 16th September 1936.—Miss Karuna Kana Gupta, daughter of Babu Upendra Nath Gupta, is appointed to the Women's Branch of the Bengal Educational Service as Professor of History, Bethune College, Calcutta, with effect from the 12th September 1936, or any subsequent date on which she joins the appointment.

Faridpur. — No. 3159Edn. — 21st September 1936.—Babu Harendra Nath Biswas, officiating Subdivisional Inspector of Schools, Faridpur Sadar, acted in the Bengal Educational Service as District Inspector of Schools, Faridpur, for the period from the 28th May to the 4th July 1936, during the absence, on leave, of Babu Kshirode Chandra Sen Gupta.

Howrah. — No. 3792T.Edn. — 19th September 1936.—Mr. Abul Moshin Ahmed, Assistant Professor of Mechanical Engineering, Bengal Engineering College, is appointed, until further orders, to act in the Bengal Senior Educational Service as Professor of Mechanical Engineering of the College, with effect from the date on which he assumes the duties of the post.

Registration.

NOTIFICATIONS.

Minister-in-charge: The Hon'ble Khan Bahadur M. Azizul Haque.

Bakarganj.—No. 651Regn.—14th September 1936.—In exercise of the power conferred by section 3 of the Bengal Muhammadan Marriages and Divorces Registration Act, 1876 (Bengal Act I of 1876), the Government of Bengal (Ministry of Education) are pleased to appoint Maulvi Ali Ahmed, temporarily to be a Muhammadan Registrar within the police-station of Lal Mohan, in the district of Bakarganj, during the absence, on leave, of Maulvi Hafizur Rahman, or until further orders.

Bakarganj.—No. 652Regn.—14th September 1936.—In exercise of the power conferred by section 2 of the Kazis' Act, 1880 (Act II of 1880), the Government of Bengal (Ministry of Education) are pleased to appoint Maulvi Ali Ahmed temporarily to be the Kazi for the celebration of marriages and the performance of other rites and ceremonies within the police-station of Lal Mohan, in the district of Bakarganj, during the absence, on leave, of Maulvi Hafizur Rahman, or until further orders.

Midnapore.—No. 657Regn.—16th September 1936.—In exercise of the power conferred by section 3 of the Bengal Muhammadan Marriages and Divorces Registration Act, 1876 (Bengal Act I of 1876), the Government of Bengal (Ministry of Education) are pleased to appoint Maulvi Shah Gholam Mustafa Alquadri temporarily to be a Muhammadan Registrar within the police-stations of Kharagpur and Kharagpur Town, in the district of Midnapore, during the absence, on leave, of Maulvi Shaik Bazlur Rahim, or until further orders.

Midnapore.—No. 658Regn.—16th September 1936.—In exercise of the power conferred by section 2 of the Kazis' Act, 1880 (Act XII of 1880), the Government of Bengal (Ministry of Education) are pleased to appoint Maulvi Shah Gholam Mustafa Alquadri temporarily to be the Kazi for the celebration of marriages and the performance of other rites and ceremonies within the police-stations of Kharagpur and Kharagpur Town, in the district of Midnapore, during the absence, on leave, of Maulvi Shaikh Bazlur Rahim, or until further orders.

Rangpur. — No. 3804T.Regn. — 19th September 1936.—Maulvi Mir Saiyid Ali, District Sub-Registrar of Rangpur, is allowed leave on average pay for two months, with effect from the 13th August 1936, under rule 81 (*b*) (*ii*) of the Fundamental Rules.

This cancels the orders in notification No. 526Regn., dated the 17th August 1936.

H. GRAHAM,
Secy. to the Govt. of Bengal.

Orders by the Inspector-General of Registration, Bengal.

Nadia.—No. 516.—14th September 1936.—Maulvi Hakimuddin Ahmed, Sub-Registrar of Mirpur, in the district of Nadia, is allowed leave for sixteen days, viz., leave on average pay for three days, under rule 81 (*b*) (*ii*) of the Fundamental Rules, with effect from the 24th February 1936, and leave on half average pay for the remaining period, under rule 81 (*d*) of those rules.

This cancels so much of this department notification No. 272, dated the 7th May 1936, as relates to granting him leave on average pay for the entire period.

Nadia.—No. 517.—14th September 1936.—Maulvi Hakimuddin Ahmed, Sub-Registrar of Mirpur, in the district of Nadia, is allowed leave for fourteen days, viz., leave on average pay for two days, under rule 81 (*b*) (*ii*) of the Fundamental Rules, with effect from the 1st April 1936, and leave on half average pay for the remaining period under rule 81 (*d*) of those rules.

Nadia.—No. 518.—14th September 1936.—Maulvi Hakimuddin Ahmed, Sub-Registrar of Mirpur, in the district of Nadia, is allowed leave for nineteen days, viz., leave on average pay for nine days, under rule 81 (*b*) (*ii*) of the Fundamental Rules, with effect from the 12th August 1936, and leave on half average pay for the remaining period, under rule 81 (*d*) of those rules.

Rangpur.—No. 519.—14th September 1936.—Maulvi Muhammad Abdur Rahman, Joint Sub-Registrar of Ulipur at Chilmari, in the district of Rangpur, is allowed leave on average pay for three days, under rule 81 (*b*) (*ii*) of the Fundamental Rules, with effect from the 15th October 1936.

Burdwan.—No. 520.—14th September 1936.—Babu Shib Chandra Banerji, M.B.E., Sub-Registrar of Asansol, in the district of Burdwan, is allowed leave on average pay for three months and five days, under rule 81 (*b*) (*ii*) of the Fundamental Rules, in extension of the leave granted to him in this department notification No. 432, dated the 21st July 1936.

Mymensingh-Dacca.—No. 521.—14th September 1936.—Babu Sudhansu Bhusan Ray, Sub-Registrar of Bhairab, in the district of Mymensingh, under orders of transfer to the 2nd Joint Sub-Registry office of Srinagar at Sirajdikhan, in the district of Dacca, is allowed leave on average pay, under rule 81 (*b*) (*ii*) of the Fundamental Rules, with effect from the date on which he may be relieved up to the 17th October 1936 (inclusive).

Jessore-Birbhum.—No. 522.—14th September 1936.—Babu Bimalapada Mukherji, Sub-Registrar of Jhenidah, in the district of Jessore, under orders of transfer to Labpur, in the district of Birbhum, is allowed leave for two months and six days, viz., leave on average pay for one month, under rule 81 (*b*) (*ii*) of the Fundamental Rules, in extension of the leave granted to him in this department notification No. 443, dated the 28th July 1936, and leave on half average pay for the remaining period, under rule 81 (*d*) of those rules.

Dacca.—No. 523.—14th September 1936.—Maulvi Chaudhuri Barhanuddin Ahmed Siddiq, Sub-Registrar of Kaliganj, in the district of Dacca, is allowed leave on average pay for two days, under rule 81 (*b*) (*ii*) of the Fundamental Rules, in extension of the leave granted to him in this department notification No. 511, dated the 7th September 1936.

Nadia-Khulna.—No. 524.—14th September 1936.—Babu Jatindra Mohan Nath, Sub-Registrar of Kumarkhali, in the district of Nadia (on leave), is appointed to be Joint Sub-Registrar of Kaliganj at Assassuni, in the district of Khulna.

Dacca.—No. 525.—17th September 1936.—Maulvi Naziruddin Muhammad (II), Joint Sub-Registrar of Sabhar at Kaliakair, in the district of Dacca, is allowed leave on average pay for one month, under rule 81(*b*)(*ii*) of the Fundamental Rules, in extension of the leave granted to him in this department notification No. 419, dated the 14th July 1936.

Nadia.—No. 526.—17th September 1936.—Babu Saroj Kumar Sen, Sub-Registrar of Ranaghat, in the district of Nadia, is allowed leave on average pay for one day, under rule 81(*b*)(*ii*) of the Fundamental Rules, in extension of the leave granted to him in this department notification No. 404, dated the 8th July 1936.

S. CHATTERJEA,
Inspr.-Genl. of Registration, Bengal.

FINANCE DEPARTMENT.

Finance.

NOTIFICATIONS.

No. 6407F.—1st August 1936.—In exercise of the powers conferred by rule 44 of the Civil Services (Classification, Control and Appeal) Rules, the Governor in Council and acting with his Ministers hereby makes the following rules to regulate the gratuities and pensions admissible to, and the retirement of, Government servants in Inferior Service under his administrative control, in supersession of all previous rules and orders on the subject which are inconsistent with the said rules:—

Rules.

1. *Short title and commencement.*—(*1*) These rules may be called the Bengal (Inferior) Services (Gratuity, Pension and Retirement) Rules, 1936.

(*2*) They shall come into force on the 1st April 1936.

2. *Application of rules.*—These rules shall apply to all Government servants in Inferior Service under the administrative control of the Government of Bengal who are or were paid from the provincial revenues of Bengal.

3. *Saving of other rules, etc.*—Nothing in these rules shall be deemed to derogate from any rules or orders in force not inconsistent with these rules.

4. *Classes of pensions and gratuities.*—Pensions and gratuities shall be of the following classes, namely:—

(*i*) Compensation pension and compensation gratuity, granted on discharge from Government service on account of reduction of establishment;

(*ii*) Invalid pension and invalid gratuity, granted on retirement from Government service on account of permanent incapacity resulting from bodily or mental infirmity;

(*iii*) Superannuation pension and superannuation gratuity, granted on attaining the age prescribed in rule 9; and

(*iv*) Retiring pension, granted on retirement from Government service after a qualifying service of 40 years.

5. *Grant of gratuity.*—Compensation gratuity, invalid gratuity or superannuation gratuity, of an amount not exceeding one-half month's pay for every completed year of qualifying service may be granted if the qualifying service on discharge or retirement is less than 25 years.

6. *Grant of pension.*—(*1*) Save as provided in sub-rule (*2*),—

(*a*) Compensation pension, invalid pension or superannuation pension, of the amount set out in Schedule I, may be granted if the qualifying service on discharge or retirement is not less than 25 years;

(*b*) Retiring pension, of the amount set out in Schedule I, may be granted if the qualifying service on retirement is not less than 40 years.

(*2*) In the case of the Government servants specified in Schedule II—

(*a*) Compensation pension, invalid pension or superannuation pension of the appropriate amount set out in Schedule II, may be granted if the qualifying service on discharge or retirement is not less than 30 years.

(*b*) Retiring pension, of the appropriate amount set out in Schedule II, may be granted if the qualifying service on retirement is not less than 40 years.

7. *Pay defined.*—For the purposes of these rules, gratuity and pension shall be calculated on the basis of the monthly substantive pay which the Government servant concerned drew or would have drawn at the time of his discharge or retirement in the permanent post held by him substantively:

Provided that if the pay of a Government servant has been reduced during the last three years of his service otherwise than as a penalty, his gratuity or pension under these rules may, at the discretion of the authority which has power to sanction it, be calculated upon the average of his pay during the last three years of his service.

8. *Qualifying service limited.*—For the purposes of these rules, qualifying service shall not begin until the Government servant concerned has attained the age of 16 years.

9. *Age of retirement.*—A Government servant shall retire when he has reached the age of 60 years:

Provided that a Government servant may be retained in service until he has attained the age of 65 years:

Provided further that such continuation in service after attaining the age of 60 years shall be contingent upon the mental and physical fitness of the Government servant concerned.

SCHEDULE I.

[*See rule 6 (1).*]

Years of completed qualifying service.	Scale of pension.	Maximum limit of pension.
25	25-80ths of pay	Rs. 8 a month.
26	26-80ths ,,	
27	27-80ths ,,	
28	28-80ths ,,	
29	29-80ths ,,	
30	30-80ths ,,	
31	31-80ths ,,	
32	32-80ths ,,	
33	33-80ths ,,	
34	34-80ths ,,	
35	35-80ths ,,	
36	36-80ths ,,	
37	37-80ths ,,	
38	38-80ths ,,	
39	39-80ths ,,	
40 and above.	40-80ths ,,	

This scale in the case of invalid and compensation pension after a service of not less than 30 years is subject to a minimum of half pay not exceeding Rs. 6.

SCHEDULE II.

[*See rule 6 (2).*]

Government servants.	Pay.	Amount of pension.
	Rs.	
(1) Duftries employed in the Secretariat of the Government of Bengal ..		Rs. 12 a month.
(2) Head Jamadar (Staff of His Excellency the Governor of Bengal	35	Rs. 10 a month.
Naib Jamadar (Staff of His Excellency the Governor of Bengal)	30	
Jamadars of the Private Secretary and Military Secretary to His Excellency the Governor of Bengal ..	25	
Jamadars of Hon'ble Members of Council, Hon'ble Ministers, the Member of the Board of Revenue, and Secretaries to Government	20—24	

No. 7887F.—14th September 1936.—In exercise of the power conferred by rules 41 and 44 of the Civil Services (Classification, Control and Appeal) Rules, the Governor in Council is pleased to make the following rule:—

A member of the Civil Police force subordinate to the Governor in Council who, before his appointment to such force, has served in the reserve of the Indian Army may, if his military service, whether or not including service with the colours in addition to service in the reserve, was pensionable under military rules but terminated before he had qualified for pension, be permitted at the discretion of the head of the department to count for increments of pay in such Civil Police force the whole of his service with the colours, if any, and half his service in the reserve.

The above rule shall have effect from the 5th September 1935.

CORRIGENDUM.

No. 7166F.—2nd September 1936.

The Bengal Financial Rules, 1st Edition (Reprint), 1930.

Pages 121-122. *S.R. 9 under T.O. 9 (a).*

Insert the words " in T.O. form No. 18 " *after* the words "memorandum (chalan)" in line 2.

Page 122. *S.R. 12A under T.O. 9 (a).*

Insert the following as S.R. 12A :—

" S.R. 12A. When money is paid by a private person into a treasury located in the same place as the departmental officer concerned in the payment the chalans should be initialled by the departmental officer to whose account the money is to be credited. Otherwise, the chalan should be tendered in triplicate one copy of the chalan being forwarded by the treasury to the departmental officer. "

Pages 122-123. *S.R. 17 under T.O. 9 (a).*

Insert the words " in T.O. form No. 18 " *after* the words "memorandum" in line 1.

Page 395.

Insert the following as a new form :—

T.O. Form No. 18.

(See S.Rs. 9 and 12A.)

CHALAN No.

Chalan of cash paid into the Treasury/Sub-Treasury/Imperial Bank of India/Reserve Bank of India at .

To be filled in by the remitter.			To be filled in by the Departmental Officer or the Treasury.		
By whom tendered.	Name (or designation) and address of the person on whose behalf money is paid.	Full particulars of the remittance and of authority (if any).	Amount.	Head of account.	Order to the Bank.†

Name

Signature . Total*

*(In words) Rupees

†To be used only in the case of remittances to Bank through an officer of the Government.

Received payment. Date

Treasurer. Accountant. Treasury Officer/Agent.

Note 1.—In the case of payments at the Treasury, Receipts for sums less than Rs. 500 do not require the signature of the Treasury Officer but only of the Accountant and the Treasurer. Receipts however for cash and cheques paid for service stamps should always be signed by Treasury Officer [S.R. 9 under T.O. 9 (*a*)].

Note 2.—Particulars of money tendered should be given on the reverse.

Note 3. In cases where direct credits at Bank are permissible the column "Head of account" will be filled in by the Treasury Officer or the Accounts Officer, as the case may be, on receipt of the Bank's Daily sheet.

(Reverse.)

Particulars.	Amount. Rs. as. p.
Coin.....	
Notes (with details).....	
Cheques (with details).....	
Total.....	

Audit.

NOTIFICATION.

No. 8064F. — 18th September 1936. — In exercise of the power conferred by rules 41, 42 and 44 of the Civil Services (Classification, Control and Appeal) Rules, the Governor in Council and acting with his Ministers is pleased to make the following amendment to the Bengal Services (Pay of Temporary Posts) Rules, 1935, namely: —

Amendment.

For rule 3 of the said Rules, the following shall be substituted: —

"With effect from the 1st April 1935, any Government servant holding a temporary post which he held on the 21st July 1931, and has, save for periods of leave or for periods of officiating or temporary service in another post on the same rate of pay or in a still higher post, held continuously since then may draw, so long as he holds that post, the pay which he would have drawn had the 15 per cent. cut orders never been issued: that is to say

(*i*) if his pay on the 21st July 1931 was a fixed pay, he may continue to draw that fixed pay;

(*ii*) if his pay on the 21st July 1931 was in a time-scale, he may, with effect from the 1st April 1935, draw pay at the rate which would have been admissible, and draw increments thereafter, on the dates on which he would have drawn them, had the 15 per cent. cut orders never been issued."

And the said rules shall have effect and shall be deemed always to have had effect as if they had been made as so amended.

ADDENDA AND CORRIGENDA.

No. 8071F.—19th September 1936.—The following corrections which have been authorised are published for general information: —

Fundamental and Subsidiary Rules, 1st Edition (Reprint), 1929.

Page 17—F. R. 17.—Insert the following as first sub-paragraph of paragraph 3 under Secretary of State's ruling and renumber the existing paragraph 3 as inserted by correction slip No. 293, dated the 2nd November 1932, as second sub-paragraph: —

The term "without avoidable delay" occurring in paragraph (*1*), should be interpreted as referring only to delay on the part of the officer in reporting himself for duty (either at the Local Government's headquarters or at the actual place of duty, as the case may be) and not to delay in actually taking up his duties thereafter.

Note.—The extent of the interval permissible between the receipt of posting orders at the local Government's headquarters and the assumption of duties is prescribed in Subsidiary Rule 4 (*6*).

Bengal Financial Rules, 1st Edition (Reprint), 1930.

Page 11—Rule 2.—Insert the following after the words "Superintending Engineer" in lines 4 and 5 of this rule: —

Divisional Accountants should not be authorised to issue final receipts in Bengal Financial Rules form No. 1 over their own signature save with the previous permission of the Accountant-General, Bengal.

Page 11—Rule 2. Insert the following as a fresh sub-paragraph to rule 2 (*7*): —

Divisional Accountants should not be required to receive or pay out cash save with the previous permission of the Accountant-General, Bengal, in the cases and on the conditions mentioned in paragraph 101 (*c*), Public Works Account Code.

Page 11—Rule 3.—Insert the following as an exception below this rule: —

"*Exception.*—In the Publication Branch of the Bengal Government Press, receipts of postage or revenue stamps for publications and advertisements are permitted."

Page 120—S. R. S under T. O. 7.—Insert the following as clause (*i*): —

"(*i*) Receipts in the Publication Branch of the Bengal Government Press to meet refunds in connection with publications and advertisements."

Page 89—Rule 282.—Cancel the "Note" under this rule.

Miscellaneous.

ERRATUM.

No. 1656 Mis.—18th September 1936.—In the new rule 70A of the Rules for the Management of the Printing Department, Bengal, as inserted by notification No. 6008-Misc., dated 7th September 1936, published at page 2282, Part I of the *Calcutta Gazette*, dated the 17th September 1936, *for* the words and figures "rules 60 and 70" *read* "rules 69 and 70."

R. L. WALKER,

Secy. to the Govt. of Bengal (offg.).

COMMERCE DEPARTMENT.

Orders by the Registrar of Joint Stock Companies, Bengal.

Calcutta, the 18th September 1936.

In the matter of the Indian Companies Act, 1913 (VII of 1913), and in the matter of Commerce, Limited.

Notice is hereby given that the name of Commerce, Limited, has this day, in pursuance of section 247 of the Act, been struck off the register and that the company is dissolved.

In the matter of the Indian Companies Act, 1913 (VII of 1913), and in the matter of Mogalhat National Bank, Ltd.

Notice is hereby given that the name of Mogalhat National Bank, Ltd., has this day, in pursuance of section 247 of the Act, been struck off the register and that the company is dissolved.

In the matter of the Indian Companies Act, 1913 (VII of 1913), and in the matter of Gunnies Exchange, Ltd.

Notice is hereby given that the name of Gunnies Exchange, Ltd., has this day, in pursuance of section 247 of the Act, been struck off the register and that the company is dissolved.

In the matter of the Indian Companies Act, 1913 (VII of 1913), and in the matter of Damuda Coal Co., Ltd.

Notice is hereby given that the name of Damuda Coal Co., Ltd., has this day, in pursuance of section 247 of the Act, been struck off the register and that the company is dissolved.

In the matter of the Indian Companies Act, 1913 (VII of 1913), and in the matter of Moslem Ayurvedia Pharmacy, Ltd.

Notice is hereby given that the name of Moslem Ayurvedia Pharmacy, Ltd., has this day, in pursuance of section 247 of the Act, been struck off the register and that the company is dissolved.

N. K. MAJUMDER,

Registrar, Joint Stock Companies.

Calcutta, the 18th September 1936.

In the matter of the Indian Companies Act, 1913 (VII of 1913), and in the matter of Indian Tea and Produce Co., Ltd.

Notice is hereby given that, on the expiration of three months from date, the name of Indian Tea and Produce Co., Ltd., will, unless cause is shown to the contrary, be struck off the register, and the company will be dissolved.

In the matter of the Indian Companies Act, 1913 (VII of 1913), and in the matter of India Co-operator, Ltd.

Notice is hereby given that, on the expiration of three months from date, the name of India Co-operator, Ltd., will, unless cause is shown to the contrary, be struck off the register and the company will be dissolved.

N. K. MAJUMDER,

Registrar of Companies under Act VII of 1913.

MARINE DEPARTMENT.

NOTIFICATIONS.

No. 28Mne.—12th September 1936.—In exercise of the power conferred by section 29 of the Inland Steam-vessels Act, 1917 (I of 1917), and with the previous sanction of the Governor-General in Council, the Governor in Council is pleased to make the following amendments in the rules relating to the grant of certificates of competency to Engineers and Engine-drivers of inland steam and motor vessels, published under this department notification No. 29Mne., dated the 11th July 1931 :—

Amendments.

I. At the end of rule 11 of the said rule the following shall be added, namely :—

"*Note.*—For the purpose of rules 11(*a*), 14(*a*), 23(*a*), 28(*a*) and 30(*a*) any period of six months or more spent at an approved technical school will count as 2/3 of the same period of workshop service provided the candidate produces a certificate of regular attendance and satisfactory progress from the Principal of the school.

For a list of approved technical schools see Appendix G."

II. After Appendix F to the said rules the following Appendix shall be added, namely :

Appendix G.

(*See* Note under rule 11.)

List of approved technical schools.

Senior Technical Schools—

Kanchrapara Technical School.
Calcutta Technical School.
B. N. Railway Apprentices' Night School.
Ordnance Technical School, Ishapore.

Junior Technical Schools at the following places :

Barisal.	Khulna
Mymensingh.	Vishnupur.
Pabna.	Rangpur.
Burdwan.	Krishnagar
Rajshahi.	Assam -
Bogra.	Sylhet.
Comilla.	Jorhat
Faridpur.	

No. 29Mne.—12th September 1936.—In exercise of the power conferred by the first proviso to section 27 of the Inland Steam-vessels Act, 1917 (I of 1917), as modified by the Governor-General in Council in pursuance of the proviso to section 73 of the said Act, by notifications of the Government of India, Department of Commerce, No. 282-S., dated 27th March 1926, No. 282-S.(9), dated 2nd March 1929, and No. 351-M. I. (2)/31, dated 9th January 1932, the Governor in Council is pleased to make the following amendments to the conditions for the grant of permits to act as engineers of motor vessels of 40 brake horse power or under, prescribed under notification No. 157Mne., dated 30th December 1926, as amended by notification No. 10Mne., dated 9th February 1928 :—

Amendments.

I. *Add* the word "or" after condition (*d*) (*ii*) and *add* the following as condition (*d*) (*iii*) :—

(*d*) (*iii*) He must have successfully completed an approved mechanical course of training at one of the technical schools mentioned in the Appendix annexed hereto and also served at least six months as a serang, tindal, greaser or apprentice or assistant engineer in the engine room of a motor vessel,

II. *Add* as an Appendix to the said conditions the following :—

Appendix.

Senior Technical Schools—

Kanchrapara Technical School.
Calcutta Technical School.
B. N. Railway Apprentices' Night School.
Ordnance Technical School, Ishapore.

Junior Technical Schools at the following places :—

Barisal.
Mymensingh.
Pabna.
Burdwan.
Rajsahi.
Bogra.
Comilla.
Faridpur.
Khulna.
Vishnupur.
Rangpur.
Krishnagar.
Assam—
Sylhet.
Jorhat.

R. L. WALKER,
Secy. to the Govt. of Bengal (offg.).

PUBLIC WORKS DEPARTMENT.

Establishment.

NOTIFICATIONS.

Minister-in-charge: The Hon'ble Nawab Sir Mohiuddin Faroqui, Kt., of Ratanpur.

No. 12T.—11th September 1936.—Mr. H. W. Irwin, Assistant Executive Engineer, attached to the office of the Superintending Engineer, Eastern Circle, is allowed, under rule 81 (*b*) (*i*) of the Fundamental Rules, leave on average pay for one month and twenty-two days, with effect from the 2nd November 1936.

No. 13 T.—14th September 1936.—Babu Phani Bhusan Sarkar, Assistant Engineer, on probation, under the Rajshahi Division of the Northern Circle, is, in the interests of the public service, transferred to the Jalpaiguri Division of that Circle, until further orders.

No. 14 T.—14th September 1936.—Babu Dhirendra Nath Chakrabarty, Assistant Engineer under the Jalpaiguri Division of the Northern Circle, is, in the interests of the public service, transferred to the Darjeeling Division of that Circle, until further orders.

No. 15T.—16th September 1936.—Mr. C. W. Tandy Green, E.G.M., Superintending Engineer, has been allowed by the High Commissioner for India leave on half average pay for twelve days, in extension of the leave already granted to him.

No. 16T.—16th September 1936.—Babu Sudhindra Nath De, Assistant Engineer, Burdwan Division, in the Central Circle, is allowed, under rule 81 (*b*) (*ii*) of the Fundamental Rules, leave on average pay for three months, with effect from the 31st October 1936.

H. S. E. STEVENS,
Secy. to the Govt. of Bengal.

DEPARTMENT OF AGRICULTURE AND INDUSTRIES.

Agriculture.

CALCUTTA, THE 14TH SEPTEMBER 1936.

RESOLUTION—No. 480 AGRI.

Minister-in-charge: The Hon'ble Nawab Sir Mohiuddin Faroqui, Kt., of Ratanpur.

The Bengal Agricultural Research Committee was constituted under resolution No. 4350 Agri., dated the 22nd August 1933. The period of office of the non-official members of the committee having expired, the Government of Bengal (Ministry of Agriculture) are pleased to reconstitute the committee with the following members :—

(1) The Hon'ble Minister in charge of the Agricultural Department, President.

(2) The Secretary to the Government of Bengal in the Agriculture and Industries Department.

(3) The Director of Agriculture, Bengal.

(4) The Director, Civil Veterinary Department, and Veterinary Adviser to the Government of Bengal.

(5) The Principal, Bengal Veterinary College.

(6) One scientific officer of the Agricultural Department to be nominated by Director of Agriculture.

(7) Professor J. C. Ghosh, D.SC., representative of pure science from the Dacca University.

(8) Professor Jnanendra Nath Mukherjee, D.SC., representative of pure science from the Calcutta University.

9. Professor S. P. Agharkar, M.A., Ph.D., F.L.S.

(10) Mr. I. S. K. Ghuznavi, B.S., Mymensingh.

The Director of Agriculture will act as Secretary to the committee.

Government reserve the power to add to the number of members. The committee shall have powers to co-opt members possessing expert knowledge and, if necessary, to appoint sub-committees to deal with special problems.

The non-official members will hold office for a period of three years or until further orders.

2. The committee will be entirely distinct from the Provincial Board of Agriculture and its main function will be to co-operate with the Imperial Council of Agricultural Research in matters connected with the advancement of agricultural and veterinary research, as well as to assist in maintaining touch between that body and agricultural activities in this Presidency. Its primary duty will be to examine all programmes of development and research which Government may propose to refer to the Imperial Council of Agricultural Research and report on any application from any association or person within the province for a grant from the Council. It will also advise the Local Government on any scheme or project which may be referred to it for opinion.

3. The Hon'ble Minister takes this opportunity of expressing his thanks to the members of the late committee for the assistance and advice they have rendered to the Agriculture Department.

Order—Ordered that a copy of the resolution be forwarded to the Director of Agriculture, the Veterinary Adviser, the Principal, Bengal Veterinary College, and the Vice-Chancellors of the Dacca and the Calcutta Universities and to the non-official members of the committee, for information.

Ordered also that the resolution be published in the *Calcutta Gazette* for general information.

By order of the Government of Bengal

(Ministry of Agriculture),

H. S. E. STEVENS,

Secretary to the Government of Bengal.

REVENUE DEPARTMENT.

Land Revenue.

NOTIFICATIONS.

Dinajpur-Bogra.—No. 13195L.R. — 14th September 1936.—Mr. F. O. Bell, I.C.S., Joint Magistrate and Deputy Collector, on leave, is appointed to be a Settlement Officer in the districts of Dinajpur and Bogra, with effect from the date on which he joins his settlement duties in those districts.

Dinagpur-Bogra.—No. 13196L.R. — 14th September 1936.—Under the provisions of section 3 (*14*) of the Bengal Tenancy Act, 1885 (Act VIII of 1885), Mr. F. O. Bell, I.C.S., Settlement Officer, Dinajpur and Bogra, is authorised to discharge in those districts, the functions of a Revenue Officer, under Chapter X of that Act, so far as they relate to surveys and the preparation of record-of-rights.

He is also vested with the powers of a Settlement Officer, under Chapter VII, Part I, of the rules under the Bengal Tenancy Act, in respect of the aforesaid areas.

Dinajpur-Bogra.—No. 13197L.R. — 14th September 1936.—Under the provisions of section 3 (*2*) of the Bengal Tenancy Act, 1885 (Act VIII of 1885), Mr. F. O. Bell, I.C.S., Settlement Officer, Dinajpur and Bogra, is appointed to discharge the functions of a Collector, under section 58 of that Act, in those districts.

Dinajpur-Bogra.—No. 13198L.R. — 14th September 1936.—Mr. F. O. Bell, I.C.S., Settlement Officer, Dinajpur and Bogra, is vested with the powers of a Revenue Officer, under section 108 of the Bengal Tenancy Act, 1885 (Act VIII of 1885), in those districts, for the purpose of revision of orders passed either by himself or by any other Revenue Officer under him, under sections 105, 105A, 106 or 107 of the said Act.

Dinajpur-Bogra.—No. 13199L.R. — 14th September 1936.—In exercise of the powers conferred by section 115B of the Bengal Tenancy Act, 1885 (Act VIII of 1885), the Governor in Council is pleased to empower Mr. F. O. Bell, I.C.S., Settlement Officer, Dinajpur and Bogra, to make corrections in the record-of-rights prepared in respect of the lands in those districts, in accordance with, and subject to, the provisions of the said section.

Dinajpur-Bogra.—No. 13200L.R. — 14th September 1936.—Mr. F. O. Bell, I.C.S., Settlement Officer, Dinajpur and Bogra, is vested with the powers of a Collector under—

(1) the Bengal Land Revenue Settlement Regulation, 1822 (VII of 1822),

(2) the Bengal Land Revenue Settlement Regulation, 1825 (IX of 1825),

(3) the Bengal Land Revenue Assessment (Resumed Lands) Regulation, 1828 (III of 1828), and

(4) the Bengal Land Revenue (Settlement and Deputy Collectors) Regulation, 1833 (IX of 1833), to be exercised in those districts.

Dinajpur-Bogra.—No. 13201L.R. — 14th September 1936.—In exercise of the powers conferred by section 35 of the Bengal Land Revenue Settlement Regulation, 1822 (Bengal Regulation VII of 1822), the Governor in Council is pleased to order that Mr. F. O. Bell, I.C.S., Settlement Officer, Dinajpur and Bogra, shall exercise in those districts, the authority of a Collector under the Bengal Land Revenue Assessment (Resumed Lands) Regulation, 1819 (Bengal Regulation II of 1819).

Midnapore.—No. 13421L.R.—15th September 1936.—Babu Sasadhar Das Gupta, Deputy Collector and Assistant Settlement Officer, Midnapore, is allowed leave on average pay for sixteen days, under rule 81 (*b*) (*ii*) of the Fundamental Rules, with effect from the 2nd October 1936.

Nadia.—No. 13428L.R.—15th September 1936.—In exercise of the powers conferred by sub-section (*3*) of section 158A of the Bengal Tenancy Act, 1885 (Act VIII of 1885), the Governor in Council is pleased to appoint for the purpose of that section Babu Satkawry Lal Dey, Sub-Deputy Collector, Ranaghat, Nadia, to perform the functions of a Certificate Officer under the Bengal Public Demands Recovery Act, 1913, for the recovery of any arrears of rent (including cesses) due to the estate of Babu Bibhuti Bhusan Sarkar and others in the district of Nadia.

Tippera.—No. 13431L.R.—15th September 1936.—Under section 3 of the Bengal Survey Act, 1875 (Bengal Act V of 1875), the Governor in Council is pleased to order that a survey shall be made of all lands which are comprised in the following Government and temporarily-settled private estates, in the district of Tippera, and that the boundaries of the estates, tenures, mauzas and fields be demarcated on the lands so to be surveyed:—

Government estates.

Serial No.	Tauzi No.	Name of estates.
1	186	Taluk Naim Hánif.
2	228	Taluk Ramákanta Shingha 1 anna 7 gandas 2 krantics kismat.
3	232	Taluk Ramákanta Shingha 2 annas 3 gandas kismat.
4	236	Taluk Ramdhan Mazumder.
5	804	Ghanashyám Bidyalankar Taluk Mudafat Hissa 2 annas Prasanna Ram Ghatak.
6	975	Pratap Narayan Dutta Taluk.
7	1611	Ram Kanta Paul Taluk Mudafat Hissa 1 anna 3 gandas 3 chataks Chakla Hari Ballav Ray.
8	2866	Kharija Taluk Amánullá.
9	3481	Srimati Bidhumukhi Dutta.
10	3863	Kunja Benode Kunda.

Temporarily-settled private estates.

1	3971	Surplus alluvial accretion to Thak Char Laggimara.
2	3992	Surplus alluvial accretion to Char Jagannath.

Tippera.—No. 13432L.R.—15th September 1936.—In exercise of the powers conferred by section 101 (*2*) (*d*) of the Bengal Tenancy Act (Act VIII of 1885), the Governor in Council is pleased to order that a survey shall be made and a record-of-rights prepared in respect of all lands included within the boundaries of the following Government estates in the district of Tippera:—

Government estates.

Serial No.	Tauzi No.	Name of estates.
		Thana Chandpur.
1	186	Taluk Naim Hánif.
2	228	Taluk Ramákanta Shingha 1 anna 7 gandas 2 krantics kismat.
3	232	Taluk Ramákanta Shingha 2 annas 3 gandas kismat.
4	236	Taluk Ramdhan Mazumder.
5	804	Ghanashyám Bidyalankar Taluk Mudafat Hissa 2 annas Prasanna Ram Ghatak.
6	975	Pratap Narayan Dutta Taluk.
7	1611	Ram Kanta Paul Taluk Mudafat Hissa 1 anna 3 gandas 3 chataks Chakla Har. Ballav Ray.
8	2866	Kharija Taluk Amánullá.
9	3481	Srimati Bidhumukhi Dutta.
10	3863	Kunja Benode Kunda.

The particulars to be recorded in the record-of-rights shall be the following:—

(*a*) the name of each tenant or occupant;

(*b*) the class or classes to which each tenant belongs, that is to say, whether he is a tenure-holder, raiyat holding at fixed rate, settled raiyat, occupancy raiyat, non-occupancy raiyat, or under-raiyat, with or without a right of occupancy, and if he is a tenure-holder, whether he is a permanent tenure-holder or not, and whether his rent is liable to enhancement during the continuance of his tenure,

(*c*) the situation and quantity of the lands held by each tenant or occupier;

(*d*) the name of each tenant's landlord;

(*e*) the rent and cess lawfully payable by each tenant at the time the record-of-rights is being prepared;

(*f*) the amount payable in respect of any rights of pasturage, forest rights, rights over fisheries and the like at the time the record-of-rights is being prepared, the conditions and incidents appertaining to such rights, and if the amount is a gradually increasing amount, the time at which and the increments by which it increases;

(*g*) the mode in which that rent has been fixed, whether by contract, by order of a Court or otherwise;

(*h*) if the rent is a gradually increasing rent, the time at which and the steps by which it increases;

(*i*) the rights and obligations of each landlord and tenant in respect of—

(*i*) the use by tenants of water for agricultural purposes, whether obtained form a river, jhil, tank or well or any other source of supply, and

(*ii*) the repair and maintenance of appliances for securing a supply of water for the cultivation of the land held by each tenant, whether or not such appliances be situated within the boundaries of each land,

(*j*) the special conditions and incidents, if any, of the tenancy;

(*k*) any right of way or other easement attaching to the land for which a record-of-rights is being prepared;

(*l*) if the land is claimed to be held rent free, whether or not rent is actually paid, and if not paid, whether or not the occupant is entitled to hold the land without payment of rent, and if so entitled, under what authority:

Provided that if lands are not used for purposes connected with agriculture or horticulture, it would be sufficient to record that fact, together with the prescribed particulars relating to the occupant, the landlord and the tenancy.

Tippera.—No. 13433L.R.—15th September 1936.—In exercise of the powers conferred by section 101 (2) (*d*) of the Bengal Tenancy Act (Act VIII of 1885) as amended up to date, the Governor in Council is pleased to order that a survey shall be made and a record-of-rights prepared in respect of all lands included within the boundaries of the following temporarily-settled private estates in the district of Tippera:—

Serial No.	Tauzi. No.	Name of estates.
		Thana Chaindpur.
1	3971	Surplus alluvial accretion to Tlak Char Laggimara.
2	3992	Surplus alluvial accretion to Char Jagannath.

The particulars to be recorded in the record-of-rights shall be the following:—

(*a*) the name of each tenant or occupant;

(*b*) the class or classes to which each tenant belongs, that is to say, whether he is a tenure-holder, raiyat holding at fixed rate, settled raiyat, occupancy raiyat, non-occupancy raiyat, or under raiyat with or without a right of occupancy, and if he is a tenure-holder, whether he is a permanent tenure-holder or not, and whether his rent is liable to enhancement during the continuance of his tenure;

(*c*) the situation and quantity of the land held by each tenant or occupier;

(*d*) the name of each tenant's landlord;

(*e*) the name of each proprietor in the local area or estate with the character and extent of his interest and the situation and quantity of the lands, if any, which are his private lands as defined in Chapter XI of the Act;

(*f*) the rent and cess lawfully payable by each tenant at the time the record-of-rights is being prepared;

(*g*) the amount payable in respect of any rights of pasturage, forest rights, rights over fisheries and the like at the time the record-of-rights is being prepared, the conditions and incidents appertaining to such rights, and if the amount is a gradually increasing amount, the time at which and the increments by which it increases;

(*h*) the mode in which that rent has been fixed, whether by contract, by order of a Court or otherwise;

(*i*) if the rent is a gradually increasing rent, the time at which and the steps by which it increases;

(*j*) the rights and obligations of each landlord and tenant in respect of—

(*i*) the use by tenants of water for agricultural purposes, whether obtained from a river, jhil, tank or well or any other source of supply, and

(*ii*) the repair and maintenance of appliances for securing a supply of water for the cultivation of the land held by each tenant, whether or not such appliances be situated within the boundaries of such land;

(*k*) the special conditions and incidents, if any, of the tenancy;

(*l*) any right of way or other easement attaching to the land for which a record-of-rights is being prepared;

(*m*) if the land is claimed to be held rent free, whether or not rent is actually paid, and if not paid, whether or not the occupant is entitled to hold the land without payment of rent, and if so entitled, under what authority:

Provided that if lands are not used for purposes connected with agriculture or horticulture, it shall be sufficient to record that fact together with the prescribed particulars relating to the occupant, the landlord and the tenancy.

Bogra.—No. 13495L.R.—17th September 1936.—Under section 3 of the Bengal Survey Act, 1875 (Bengal Act V of 1875), the Governor in Council is pleased to order that a survey shall be made of all lands comprised within the boundaries of mauzas Malaipur, jurisdiction list No. 181, Kadamgachhi, jurisdiction list No. 182, Banskata, jurisdiction list No. 184, and Deonahar, jurisdiction list No. 185, police-station Jaipurhat, in the district of Bogra, and further that the boundaries of the estates, tenures, mauzas and fields be demarcated on the lands so to be surveyed.

Bogra.—No. 13498L.R.—17th September 1936.—In exercise of the power conferred by section 101 (*l*) of the Bengal Tenancy Act (Act VIII of 1885), the Governor in Council is pleased to order that a survey shall be made and record-of-rights prepared in respect of all the lands comprised within the boundaries of mauzas Malaipur, jurisdiction list 181,

Kadamgachhi, jurisdiction list 182, Banskata, jurisdiction list 184, and, Deonahar, jurisdiction list 185, police-station Jaipurhat, in the district of Bogra.

The particulars to be recorded in the record-of-rights shall be the following:—

(*a*) the name of each tenant or occupant;

(*b*) the class or classes to which each tenant belongs, that is to say, whether he is a tenure-holder, raiyat holding at fixed rates, settled raiyat, occupancy raiyat, non-occupancy, or under-raiyat with or without a right of occupancy, and if he is a tenure-holder, whether he is a permanent tenure-holder or not, and whether his rent is liable to enhancement during the continuance of his tenure;

(*c*) the situation and quantity of the land held by each tenant or occupier;

(*d*) the name of each tenant's landlord;

(*e*) the name of each proprietor in the local area or estate with the character and extent of his interest, and the situation and quantity and one or more of the boundaries of the lands, if any, which are his private lands as defined in Chapter XI of the Act;

(*f*) the rent and cess lawfully payable by each tenant at the time the record-of-rights is being prepared;

(*g*) the amount payable in respect of any rights of pasturage, forest rights, rights over fisheries and the like at the time the record-of-rights is being prepared, the condition and incidents appertaining to such rights, and if the amount is a gradually increasing amount, the time at which and the increements by which it increases;

(*h*) the mode in which that rent has been fixed, whether by contract, by order of a court or otherwise;

(*i*) if the rent is a gradually increasing rent, the time at which and the steps by which it increases;

(*j*) the rights and obligations of each tenant and landlord in respect of—

(*i*) the use by tenants of water for agricultural purposes, whether obtained from a river, jhil, tank or well or any other source of supply, and

(*ii*) the repair and maintenance of appliances for securing a supply of water for the cultivation of the land held by each tenant, whether or not such appliances be situated within the boundaries of each land;

(*k*) the special conditions and incidents, if any, of the tenancy;

(*l*) any right-of-way or other easement attaching to the land for which record-of-rights is being prepared;

(*m*) if the land is claimed to be held rent-free, whether or not rent is actually paid, and if not paid, whether or not the occupant is entitled to hold the land without payment of rent, and, if so entitled, under what authority:

Provided that if lands are not used for purposes connected with agriculture or horticulture, it shall be sufficient to record that fact together with the prescribed particulars relating to the occupant, the landlord and the tenancy.

Dinajpur-Bogra. — No. 13502L.R. — 17th September 1936.—Babu Shailendra Nath Mitra, Deputy Collector, employed as Assistant Settlement Officer in the district of Dinajpur, is, in the interest of public service, also appointed to be an Assistant Settlement Officer in the district of Bogra, with effect from the date on which he joins his settlement duties in that district.

Dinajpur-Bogra.—No. 13503L.R. — 17th September 1936.—Maulvi Nazir Hossain, Sub-Deputy Collector, employed as Assistant Settlement Officer in the district of Dinajpur, is, in the interest of public service, also appointed to be an Assistant Settlement Officer in the district of Bogra, with effect from the date on which he joins his settlement duties in that district.

Bogra.—No. 13504L.R. — September 1936.—Under the provisions of section 3 (*14*) of the Bengal Tenancy Act, 1885 (Act VIII of 1885), the undermentioned officers are authorised to discharge, in the district of Bogra, the functions of a Revenue Officer, under Chapter X of that Act, so far as they relate to surveys and the preparation of record-of-rights.

They are also vested with the powers of an Assistant Settlement Officer, under Chapter VII, Part I, of the rules under the Bengal Tenancy Act, in respect of the aforesaid area:—

Babu Shailendra Nath Mitra, Deputy Collector.

Maulvi Nazir Hossain, Sub-Deputy Collector.

Dinajpur-Bogra. — No. 13505L.R. — 17th September 1936.—Babu Nityananda Chakrabatti, Kanungo, now employed as Technical Adviser to the Settlement Officer, Dinajpur, is, in the interest of public service, also appointed to be Technical Adviser to the Settlement Officer, Bogra, with effect from the date on which he joins his settlement duties in that district.

Bogra.—No. 13506L.R.—17th September 1936. Under the provisions of section 3 (*14*) of the Bengal Tenancy Act, 1885 (Act VIII of 1885), Babu Nityananda Chakrabatti, Settlement Kanungo and Technical Adviser to the Settlement Officer, Bogra, is authorised to discharge, in the district of Bogra, the functions of a Revenue Officer, under Chapter X of that Act, so far as they relate to surveys and the preparation of record-of-rights.

He is also vested with powers of an Assistant Settlement Officer, under Chapter VII, Part I, of the rules under the Bengal Tenancy Act, in respect of the aforesaid area.

Rangpur.—No. 13518L.R.—17th September 1936.—It is hereby notified that the survey carried out under the orders of Government under section 3 of the Bengal Survey Act, 1875 (Bengal Act V of 1875), and sub-section (*l*) of section 101 of the Bengal Tenancy Act, 1885 (Act VIII of 1885), and particulars where of have been embodied in the undermentioned notifications, is adopted as defining villages for the purpose of clause 19 (*b*) of section 3 of the Bengal Tenancy Act, 1885 (Act VIII of 1885), in the police-stations of Gaibandha, Sadullapur, Kaunia, Pirgachha, Saghatta, Phulchhari and Sundarganj in the district of Rangpur:—

Notification No. 13239L.R., dated the 13th November 1930.

Notification No. 9474L.R., dated the 1st August 1931.

Rangpur.—No. 13519L.R.—17th September 1936.—In exercise of the power conferred by sub-clause (*b*) of clause (7) of section 3 of the Land Registration Act, 1876 (Bengal Act VII of 1876), the Governor in Council is pleased to adopt the villages lying in the police-stations of Gaibandha, Sadullapur, Kaunia, Pirgachha, Saghatta, Phulchhari and Sundarganj within the administrative units of the district of Rangpur as surveyed and recorded under the Bengal Tenancy Act, 1885 (Act VIII of 1885), and the Bengal Survey Act, 1875 (Bengal Act V of 1875), in accordance with the notifications No. 13239L.R., dated the 13th November 1930, and 9474L.R., dated the 1st August 1931, as defining mauzas for the purposes of that clause in the said police-stations in that district.

Rangpur.—No. 13525L.R.—17th September 1936.—Maulvi Nizamuddin Ahmed, Sub-Deputy Collector and Assistant Settlement Officer, Rangpur, was allowed "earn leave" for ninety days, under rule 10 of the Bengal Services (Revision of Leave) Rules, 1934, with effect from the 2nd July 1935.

This cancels notification No. 7484L.R., dated the 30th May 1935, published at page 972, Part I, of the *Calcutta Gazette*, dated the 6th June 1935.

ERRATA.

Pabna.—No. 13663L.R.—21st September 1936.—In notification No. 10119L.R., dated the 14th July 1936, published at page 1842 of Part I of the *Calcutta Gazette* of the 30th July 1936, *read* "Dhangara" *for* "Ullapara" wherever it occurs in the notification. *Delete* the words "Name of Debt Settlement Board" and "Name of Municipality comprising the local area" in the last but one line of the notification. *Delete* "Municipality" of the last line and *read* "Khokshabari" *for* "Sirajganj" in both places of the last line of the notification.

Pabna.—No. 13664L.R.—21st September 1936.—In notification No. 10100L.R., dated the 14th July 1936, published at pages 1827-28 of Part I of the *Calcutta Gazette* of the 30th July 1936, in cases of the two last mentioned Debt Settlement Boards under the Sirajganj subdivision, *read* "Dhangara" *for* "Ullapara" and "Khokshabari" *for* "Sirajganj Municipality".

Noakhali.—No. 13665L.R.—21st September 1936.—In notification No. 10103L.R., dated the 14th July 1936, published at pages 1834-36 of Part I of the *Calcutta Gazette* of the 30th idem, under the Neazpur Debt Settlement Board, *read* "2. Babu Chandra Kumar Bhoumik" *for* "2. Babu Chandra Kumar Majumdar".

Land Acquisition.

NOTIFICATIONS.

Tippera.—No. 13425L.A.—15th September 1936.—The Governor in Council is pleased to cancel the notification No. 10807L.A., dated the 12th August 1935, under section 4 of the Land Acquisition Act, I of 1894, published at pages 1580-1581, Part I of the *Calcutta Gazette* of the 15th idem, in respect of the proposed acquisition of 0·101 of an acre of land required for the proper maintenance of the Chittagong Trunk Road in the village of Krishnanagar *alias* Ghoramara within Sankarpur, jurisdiction list No. 247, thana Comilla (Kotwali), pargana Meharkul, district Tippera.

Faridpur.—No. 13515L.A.—17th September 1936.—Whereas it appears to the Governor in Council that land is likely to be required to be taken by Government at the public expense for a public purpose, viz., for subdivisional headquarters at Madaripur, in the village of Sakuni, jurisdiction list No. 374, thana Madaripur, pargana Madaripur, zilla Faridpur, it is hereby notified that for the above purpose a piece of land measuring, more or less, 49·40 acres comprising whole of cadastral survey plots Nos. 102, 103, 104, 105, 106, 107, 108, 109, 110, 111, 118, 119, 120, 121, 122, 123, 124, 173, 174, 195, 196, 197, 198, 199, 200, 201, 202, 203, 204, 205, 206, 207, 208, 209, 210, 217, 218, 219, 220, 221, 222, 223, 224, 225, 226, 227, 228, 229, 230, 231, 236, 237, 279, 280, 281, 303, 304, 305, 306, 307, 308, 309, 310, 313, 423, 435, and parts of plots Nos. 98, 99, 100, 101, 112, 113, 116, 117, 125, 171, 172, 175, 194, 198, 211, 212, 213, 232, 233, 235, 238, 246, 278, 282, 283, 284, 285, 289, 300, 301, 302, 311, 312, 314, 315, 316, 317, 323, 334 and 337, is likely to be required within the aforesaid village of Sakuni.

This notification is made, under the provisions of section 4 of Act I of 1894, to all whom it may concern.

A plan of the land may be inspected in the office of the Subdivisional Officer of Madaripur.

In exercise of the powers conferred by the aforesaid section, the Governor in Council is pleased to authorise the officers for the time being engaged in the undertaking, with their servants and workmen, to enter upon and survey the land and do all other acts required or permited by that section.

Any person interested in so much of the above land as is not waste or arable, who has any objection to the acquisition thereof, may, within thirty days after the date on which public notice of the substance of this notification is given in the locality, file an objection in writing before the Collector of Faridpur.

In exercise of the powers conferred by section 17 (*4*) of the Land Acquisition Act, I of 1894, as amended by Act XXXVIII of 1923, the Governor in Council is pleased to direct that the provisions of section 5A of the Act shall not apply to the waste or arable portions of the land in this case.

Midnapore.—No. 13523L.A.—17th September 1936.—Whereas it appears to the Governor in Council that land is likely to be required to be taken by Government at the public expense for a public purpose, viz., for the District Intelligence Branch office and its compound at Midnapore, in the village of Cantonment Barpathar, jurisdiction list No. 168, thana Midnapore, pargana Midnapore, district Midnapore, it is hereby notified that for the above purpose a piece of land comprising cadastral plot Nos. 188, 189 and part of 190 and measuring, more or less, 3·20 acres, is likely to be required within the aforesaid village of Cantonment Barpathar.

The notification is made, under the provisions of section 4 of Act I of 1894, to all whom it may concern.

A plan of the land may be inspected in the office of the Collector of Midnapore.

In exercise of the powers conferred by the aforesaid section, the Governor in Council is pleased to authorise the officers for the time being engaged in the undertaking, with their servants and workmen, to enter upon and survey the land and do all other acts required or permitted by that section.

Any person interested in the above land, who has any objection to the acquisition thereof, may, within thirty days after the date on which public notice of the substance of this notification is given in the locality, file an objection in writing before the Collector of Midnapore.

Mymensingh. — No. 13532L.A. — 17th September 1936.—Whereas it appears to the Governor in Council that land is likely to be required to be taken by Government at the public expense for a public purpose, viz., for the extension of a landing ground for ambulance asroplane at Mymensingh, in the village of Char Iswardia, jurisdiction list No. 51, thana Katwali, pargana Mymensingh, district Mymensingh, it is hereby notified that for the above purpose a piece of land comprising portions of cadastral plots Nos. 2511, 2512, 2536, 2537 and 2538 and measuring, more or less 0·12 of an acre, in addition to 9·1735 acres of land specified in notification No. 4160L.A., dated the 14th March 1936, is likely to be required within the aforesaid village of Char Iswardia.

The notification is made, under the provisions of section 4 of Act I of 1894, to all whom it may concern.

A plan of the land may be inspected in the office of the Collector of Mymensingh.

In exercise of the powers conferred by the aforesaid section, the Governor in Council is pleased to authorise the officers for the time being engaged in the undertaking, with their servants and workmen, to enter upon and survey the land and do all other acts required or permitted by that section.

Any person interested in the above land, who has any objection to the acquisition thereof, may, within thirty days after the date on which public notice of the substance of this notification is given in the locality, file an objection in writing before the Collector of Mymensingh.

Calcutta.—No. 13535L.A.—17th September 1936.—The Governor in Council is pleased to cancel the notification No. 7619L.A., dated the 31st May 1935, under section 4 of the Land Acquisition Act, published at pages 980-981, Part I of the *Calcutta Gazette* of the 6th June 1935, in respect of the proposed acquisition of 0·0145 of an acre of land being a portion of premises No. 2, Hanspukur Lane, Calcutta, required by the Calcutta Improvement Trust for alignment No. I, Barrabazar, in Ward No. V of the Calcutta Municipality, in the city of Calcutta.

Burdwan.—No. 13602L.A.—19th September 1936.—Whereas it appears to the Governor in Council that additional land is likely to be required to be taken by Government at the public expense for a public purpose, viz., for the improvement of the 10th mile of the Burdwan Arambagh Road in the village of Kantapukur, jurisdiction list No. 94, thana Khandaghosh, pargana Khandaghosh, district Burdwan, it is hereby notified that for the above purpose two pieces of land comprising parts of cadastral survey plot Nos. 353-362, 366, 367, 517, 518-521, 526, 527 and 553 and altogether measuring, more or less, 0·36 of an acre are likely to be required within the aforesaid village of Kantapukur.

This notification is made, under the provisions of section 4 of Act I of 1894, to all whom it may concern.

A plan of the land may be inspected in the office of the Special Land Acquisition Officer, Burdwan, as well as in that of the Executive Engineer, Burdwan Division.

In exercise of the powers conferred by the aforesaid section, the Governor in Council is pleased to authorise the officers for the time being engaged in the undertaking, with their servants and workmen, to enter upon and survey the land and do all other acts required or permitted by that section.

Any person interested in the above land, who has any objection to the acquisition thereof, may, within thirty days after the date on which public notice of the substance of this notification is given in the locality, file an objection in writing before the Collector of Burdwan.

Hooghly.—No. 13605L.A.—19th September 1936.—Whereas it appears to the Governor in Council that land is likely to be required to be taken by Government at the expense of the Hooghly-Chinsura Municipality for a public purpose, viz., for widening of a road junction at Mallikkasem hat, in the town of Hooghly, jurisdiction list No. 19, thana Chinsura, pargana Arsa, district Hooghly, it is hereby notified that for the above purpose a piece of land comprising portion of cadastral plot No. 4095, and measuring, more or less, 0·006 of an acre, is likely to be required within the aforesaid town of Hooghly.

This notification is made, under the provisions of section 4 of Act I of 1894, to all whom it may concern.

A plan of the land may be inspected in the office of the Land Acquisition Deputy Collector of Hooghly.

In exercise of the powers conferred by the aforesaid section, the Governor in Council is pleased to authorise the officers for the time being engaged in the undertaking, with their servants and workmen, to enter upon and survey the land and do all other acts required or permitted by that section.

Any person interested in the above land, who has any objection to the acquisition thereof, may, within thirty days after the date on which public notice of the substance of this notification is given in the locality, file an objection in writing before Land Acquisition Deputy Collector of Hooghly.

Rajshahi.—No. 13608L.A.—19th September 1936.—Whereas it appears to the Governor in Council that land is likely to be required to be taken by Government at the expense of the Rajshahi Municipality for a public purpose, viz., for a Muhammadan burial ground in the villages of Sirail and Lakshmipur, jurisdiction list Nos. 113 and 209, respectively, thana Boalia, parganas Laskarpur and Garherhat, district Rajshahi, it is hereby notified that for the above purpose a piece of land comprising cadastral plot Nos. 957 (part) of Sirail and 456 of Lakshmipur, and measuring, more or less, 1·44 acres is likely to be required within the aforesaid villages of Sirail and Lakshmipur.

This notification is made, under the provisions of section 4 of Act I of 1894, to all whom it may concern.

A plan of the land may be inspected in the office of the Collector of Rajshahi.

In exercise of the powers conferred by the aforesaid section, the Governor in Council is pleased to authorise the officers for the time being engaged in the undertaking, with their servants and workmen, to enter upon and survey the land and do all other acts required or permitted by that section.

Any person interested in the above land, who has any objection to the acquisition thereof, may, within thirty days after the date on which public notice of the substance of this notification is given in the locality, file an objection in writing before the Collector of Rajshahi.

Calcutta.—No. 13614L.A.—19th September 1936.—Whereas it appears to the Governor in Council that land is likely to be required to be taken by Government at the expense of the Calcutta Electric Supply Corporation, Limited, for a public purpose, viz., for the construction of a Transformer House for the purpose of supplying electric energy to the public, in Ward No. XXVII of the Calcutta Municipality, in the city of Calcutta, it is hereby notified that for the above purpose a piece of land being a portion of premises No. 53, Hindusthan Park, and measuring, more or less, 2 cottahs 3 chittaks 5 square feet equivalent to 0·0363 of an acre, bounded on the—

North—By premises No. 54, Hindusthan Park,

East—By Hindusthan Park,

South—By the remaining portion of premises No. 53, Hindusthan Park,

West—By premises No. 39/5, Monaharpukur Road,

is likely to be required within the aforesaid Ward No. XXVII of the Calcutta Municipality in the city of Calcutta.

This notification is made, under the provisions of section 4 of Act I of 1894, to all whom it may concern.

A plan of the land may be inspected in the office of the First Land Acquisition Collector, at No. 5, Bankshall Street, Calcutta.

In exercise of the powers conferred by the aforesaid section, the Governor in Council is pleased to authorise the officers for the time being engaged in the undertaking, with their servants and workmen, to enter upon and survey the land and do all other acts required or permitted by that section.

Any person interested in the above land, who has any objection to the acquisition thereof, may, within thirty days after the date on which public notice of the substance of this notification given in the locality, file an objection in writing before the First Land Acquisition Collector at No. 5, Bankshall Street, Calcutta.

Midnapore.—No. 13617L.A.—19th September 1936.—Whereas it appears to the Governor in Council that land is likely to be required to be taken by Government at the public expense for a public purpose, viz., for rifle range at Midnapore, in the village of Gopgar, jurisdiction list No. 148, thana Midnapore, pargana Midnapore, zilla Midnapore, it is hereby notified that for the above purpose a piece of land comprising part of cadastral survey plot No. 5 and measuring, more or less, 4·96 acres, is likely to be required within the aforesaid village of Gopgar.

This notification is made, under the provisions of section 4 of Act I of 1894, to all whom it may concern.

A plan of the land may be inspected in the office of the Collector of Midnappre.

In exercise of the powers conferred by the aforesaid section, the Governor in Council is pleased to authorise the officers for the time

being engaged in the undertaking, with their servants and workmen, to enter upon and survey the land and do all other acts required or permitted by that section.

In exercise of the powers conferred by section 17(*4*) of the Land Acquisition Act, I of 1894, as amended by Act XXXVIII of 1923, the Governor in Council is pleased to direct that provisions of section 5A of the Act shall not apply in this case.

Burdwan.—No. 13644L.A.—21st September 1936.—Whereas it appears to the Governor in Council that land is likely to be required to be taken by Government at the public expense for a public purpose, viz., for the approach and outfall channel of pipe culvert under District Board Road, Damodar Canal Project, in the village of Kapsor, jurisdiction list No. 40, thana Bhatar, pargana Mazafarsahi, district Burdwan, it is hereby notified that for the above purpose a piece of land comprising parts of cadastral survey plot Nos. 2525 and 2526 and measuring, more or less, 0·02 of an acre, is likely to be required within the aforesaid village of Kapsor.

This notification is made, under the provisions of section 4 of Act I of 1894, to all whom it may concern.

A plan of the land may be inspected in the office of the Special Land Acquisition Officer, Burdwan, as well as in that of the Executive Engineer, Damodar Canal Division, Burdwan.

In exercise of the powers conferred by the aforesaid section, the Governor in Council is pleased to authorise the officers for the time being engaged in the undertaking, with their servants and workmen, to enter upon and survey the land and do all other acts required or permitted by that section.

In exercise of the powers conferred by section 17(*4*) of the Land Acquisition Act, I of 1894, as amended by Act XXXVIII of 1923, the Governor in Council is pleased to direct that provisions of the section 5A of the Act shall not apply in this case.

DECLARATIONS.

Dacca.—No. 13509L.A.—17th September 1936.—Whereas it appears to the Governor in Council that land is required to be taken by Government at the expense of the Dacca district board for a public purpose, viz., for a diversion road on the 3rd mile of the Dhamrai Kaliakoir road, in the village of Chanditala, jurisdiction list No. 476, in thana Sabhar, pargana Talifabad, district Dacca, it is hereby declared that for the above purpose a piece of land comprising cadastral survey plot No. 108 and part of cadastral survey plot No. 97 and measuring, more or less, 0·78 of an acre, is required within the the aforesaid village of Chanditala.

This declaration is made, under the provisions of section 6 of Act I of 1894, to all whom it may concern.

A plan of the land may be inspected in the office of the Collector of Dacca.

Murshidabad. — No. 13512L.A. — 17th September 1936.—Whereas it appears to the Governor in Council that land is required to be taken by Government at the expense of district board of Murshidabad for a public purpose, viz., for easing a bend corner in Satui village on the 66th mile of Farakka-Ramnagar road in the village of Bara Satui, jurisdiction list No. 39, thana Berhampur town, pargana Mahalandi, zilla Murshidabad, it is hereby declared that for the above purpose a piece of land comprising part of cadastral plot No. 1267 of mauza Barasatui and measuring, more or less 0·0234 of an acre, is required within the aforesaid village of Barasatui.

This declaration is made, under the provisions of section 6 of Act I of 1894, to all whom it may concern.

A plan of the land may be inspected in the office of the Collector of Murshidabad.

Burdwan.—No. 13559L.A.—17th September 1936.—Whereas it appears to the Governor in Council that land is required to be taken by Government at the public expense for a public purpose, viz., for the approach and outfall channel of pipe culvert under District Board Road, Damodar Canal Project, in the village of Chandipur, jurisdiction list No. 41, in thana Bhatar, pargana Mazafarsahi, district Burdwan, it is hereby declared that for the above purpose a piece of land comprising part of cadastral survey plot No. 2273, and measuring, more or less, 0·02 of an acre, is required within the aforesaid village of Chandipur.

This declaration is made, under the provisions of section 6 of Act I of 1894, to all whom it may concern.

A plan of the land may be inspected in the office of the Special Land Acquisition Officer, Burdwan, as well as in that of the Executive Engineer, Damodar Canal Division, Burdwan.

Dacca.—No. 13611L.A.—19th September 1936.—Whereas it appears to the Governor in Council that land is required to be taken by Government at the expense of the Baidyer Bazar union board, for a public purpose, viz., for a road from Khanshardi to Hamsadi-Baradi Local Board Road in the village of Basundardi, jurisdiction list No. 452, thana Baidyer Bazar, pargana Tappa Daulatpur, district Dacca, it is hereby declared that for the above purpose a piece of land comprising parts of cadastral survey plot Nos. 50, 59, 60, 61, 68, 70 and 71 of mauza Basundardi, and measuring, more or less, 0·36 of an acre, is required within the aforesaid village of Basundardi.

This declaration is made, under the provisions of section 6 of Act I of 1894, to all whom it may concern.

A plan of the land may be inspected in the office of the Subdivisional Officer, Narainganj.

Cinchona.

Darjeeling.—No. 13529Cin.—17th September 1936.—Mr. G. Holl, officiating Assistant Manager, Government Cinchona Plantation, Munsong, district Darjeeling, is allowed leave on average pay for fifteen days, with effect from the 14th September 1936, under rule 81 (*b*)(*ii*) of the Fundamental Rules.

J. B. KINDERSLEY,
Secy. to the Govt. of Bengal (offg.).

Orders by the Commissioner of Excise and Salt, Bengal.

No. 38Exc.—17th September 1936.—Babu Rabindra Nath Basu, Inspector of Excise and Salt, Contai Range, Midnapore, is allowed leave on average pay from the 31st October 1936 to the 23rd December 1936, under rule 81(*a*) (*ii*) of the Fundamental Rules.

No. 39Exc.—19th September 1936.—Babu Bimal Krishna Bose, Inspector of Excise and Salt, Calcutta, is allowed leave on average pay for one day, viz., the 31st October 1936, under rule 81 (*b*) (*ii*) of the Fundamental Rules. He will return to his old post on the expiry of his leave.

No. 40Exc.—19th September 1936.—Maulvi Kazi Barkat Ali, Inspector-in-charge of Excise and Salt, Chittagong, is, on relief by Babu Gunendra Nath Roy Choudhury, temporarily posted to the bonded laboratory of Messrs. B. K. Paul & Co., in Calcutta in the public interest.

A. S. LARKIN,
Commr. of Excise and Salt, Bengal (offg.).

TREASURY NOTICES.

Jessore, the 3rd September 1936.

Sub-Deputy Collector Babu Dhirendra Chandra Nag has temporarily been placed in executive charge of the Jessore Treasury, with effect from the forenoon of the 3rd September 1936, and is authorised to draw bills on other treasuries.

S. DUTT, *Collector.*

Comilla, the 16th September 1936.

Maulvi Khurshed Alam Choudhury, Deputy Magistrate and Deputy Collector, has been placed in charge of the Tippera Treasury from the 16th September 1936, and is authorised to draw bills on other treasuries and banks from that date.

J. P. RAY, *Addl. Collector.*

SHERIFF'S OFFICE.

The 24th September 1936.

Notice is hereby given that the Fifth Criminal Sessions of the year 1936 of the High Court of Judicature at Fort William in Bengal for the town of Calcutta and Factory of Fort William and the places subordinate thereto, will be held at the Court House, in the town of Calcutta, on Wednesday, the 25th day of November 1936, at 11 o'clock in the forenoon, and thenceforward from day to day until the said sessions be over. And it is hereby proclaimed that all persons who are to prosecute any of the prisoners to be brought up for trial at the said sessions be present then and there to prosecute.

C. G. ARTHUR, *Sheriff.*

সরিফ আফিস, সন ১৯৩৬ সালের ২৪শে সেপ্টেম্বর।

সকলকে সমাচার দেওয়া যাইতেছে যে, সুবে বাঙ্গালার ফোর্ট উইলিয়ম দুর্গের অধীনে সহর কলিকাতার ও অন্যান্য স্থানের ফৌজদারী বিচার নিষ্পত্তি জন্য আগামী সন ১৯৩৬ সালের ২৫শে নভেম্বর বুধবার বেলা ১১ ঘটিকার সময় এবং যে পর্য্যন্ত সেশিয়ানের কার্য্য সমাধা না হয়, প্রতিদিন উক্ত সময়ে কলিকাতার হাইকোর্টের আপন আদালত ঘরে সন ১৯৩৬ সালের পঞ্চম ক্রিমিন্যাল সেশিয়ান বসিবেক এবং এতদ্বারা প্রচার করা যাইতেছে যে, যে সকল ব্যক্তি কোন করেদীর বিরুদ্ধে ফৌজদারী মিছিল করিবেক, তাহারা উক্ত স্থানে উক্ত সময়ে হাজির থাকিয়া মোকদ্দমা করে। ইতি।

সি, জি, আর্থার,
সরিফ।

ORDERS BY COMMISSIONERS OF DIVISIONS.

Burdwan Division—Chinsura.

No. 2351L.S.-G.—15th September 1936.—In exercise of the powers conferred on me by section 19 (*2*) of the Bengal Local Self-Government Act (Act III (B.C.) of 1885) and acting under the orders of the Local Government given in the exercise of the administrative control vested in them by section 29B of the Act, I hereby appoint Maulvi Abdul Wadud, M.A., B.T., to be a member of the Howrah district board in the district of Howrah, *vice* the District Inspector of Schools, Howrah, removed.

No. 2364L.S.-G.—16th September 1936.—In exercise of the powers conferred on me by section 19(*2*) of the Bengal Local Self-Government Act (Act III (B. C.) of 1885) and acting under the orders of the Local Government given in the exercise of the administrative control vested in them by section 29B of the Act, I hereby appoint Babu Amarendra Nath Chaudhury to be a member of the Hooghly district board in the district of Hooghly, *vice* Babu Atul Chandra Chaudhury, deceased.

No. 5450J.G.—16th September 1936.—Babu Makhan Lal Chatterjee, Sub-Deputy Collector and Circle Officer, Mallarpur, in the Rampurhat subdivision of the district of Birbhum, is granted, under rule 81(*b*) (*ii*) of the Fundamental Rules, leave on average pay for thirteen days from the 31st October 1936 to 12th November 1936, both days inclusive.

No. 1535M.—17th September 1936.—It is hereby notified for general information under section 50 of the Bengal Municipal Act of 1932 (Act XV of 1932) that Babu Dinabandhu Bose has been elected uncontested as a Commissioner for Ward No. II of the Kalna Municipality in the district of Burdwan, in place of Dr. Sudhir Kumar Sen, resigned.

No. 1539M.—17th September 1936.—It is hereby notified for general information under section 50 of the Bengal Municipal Act of 1932 (Act XV of 1932) that at a by-election held on the 1st August 1936, Babu Kali Bhusan Biswas was duly elected as a Commissioner for Ward No. I of the Kalna Municipality in the district of Burdwan, in place of Dr. Kanai Lal Sen, resigned.

No. 1650M.—17th September 1936.—It is hereby notified for general information under section 50 of the Bengal Municipal Act of 1932 (XV of 1932) that the Commissioners of the Bansberia Municipality, by a resolution passed at a meeting held on the 29th August 1936, duly elected Sheik Hyder Ali to be their Vice-Chairman, *vice* Babu Mohendra Nath Kundu, resigned.

No. 1669M. — 19th September 1936.—In exercise of the powers conferred by sub-section (*3*) of section 145 of the Bengal Municipal Act, 1932 (Bengal Act XV of 1932), delegated to all Commissioners of Divisions by the Local Government in notification No. 6697M. of the 7th December 1933, I hereby authorise the Commissioners of the Khirpai Municipality, in the district of Midnapore, to appoint at a meeting (1) Babu Janaki Pada Dutta and (2) Babu Nagendra Nath Bose without salary as assessors to prepare the valuation and assessment list of the municipality.

L. B. BURROWS, *Commissioner.*

Bankura, the 14th September 1936.

No. 5360J.—It is hereby notified for general information that, under section 13 of the Bengal Village Self-Government Act, 1919 (Bengal Act V of 1919), read with rule 35 of the rules for election and appointment of members of union boards, Babu Aridaman Roy has been elected as a member of Konemara union board in police-station Gangajalghati in the Sadar subdivision of the district of Bankura, *vice* Babu Dibakar Singha, deceased.

J. M. CHATARJI, *District Magistrate.*

Chinsura, the 16th September 1936.

Corrigendum.—In this office notification No. 4514J.G., dated the 21st May 1935, appearing at pages 932-941 of the *Calcutta Gazette*, dated the 30th May 1935, Part I—

Under section 6(2), Village Self-Government Act.

Read "Babu Satya Charan Show" *for* "Babu Satya Charan Daw" under Mogra union board of Mogra police-station.

S. P. GHOSE, *District Magistrate.*

Orders by the Deputy Inspector-General of Police, Burdwan Range.

Chinsura. — No. 7055. — 18th September 1936.—Babu Debendra Nath Sen, Inspector, Hooghly, is granted 13 days' leave on average pay, under rule 81(*b*)(*ii*) of the Fundamental Rules, with effect from 31st October 1936 with permission to prefix to his leave Sunday, the 18th October 1936 and the gazetted holidays from the 19th October 1936 to the 30th October 1936, and to affix to it the gazetted holidays on the 13th and 14th November 1936 and Sunday, the 15th November 1936.

J. M. MACKENZIE,

Deputy Inspector-General of Police (offg.).

Chittagong Division—Chittagong.

Tippera, the 19th September 1936.

No. 8984M.—It is notified for general information that, under section 13 of the Bengal Village Self-Government Act, 1919 (Act V of 1919), and rule 36 of the rules for election and appointment of members of union boards, Munshi Md. Ismail Mia and Munshi Ansar Ali Pandit have been appointed as members of Uttarda union board No. XI of Laksam police-station in the Sadar South subdivision of the district of Tippera, *vice* Munshi Makbuler Rahaman Mia, resigned and Munshi Yusuf Ali, deceased.

J. P. RAY, *Addl. District Magistrate.*

Orders by the Deputy Inspector-General of Police, Bakarganj Range.

Barisal.—No. 4509.—17th September 1936. —In partial modification of the orders published under notification—Barisal—No. 4386, dated the 10th September 1936, in the *Calcutta Gazette*, dated the 17th September 1936, Sub-Inspector Amulya Mohan Chakrabatti of Noakhali is transferred to Chittagong to act as Inspector, *vice* Babu Heramba Mohan Guha, Court Inspector, granted leave.

He is absorbed in the vacancy caused by the transfer of Sub-Inspector Abdul Aziz of Chittagong to Bakarganj.

This cancels the transfer of Babu Nagendra Bihari Basu, Inspector, from Tippera to Chittagong and that of Babu Heramba Mohan Guha, Inspector, from Chittagong to Tippera.

The transfer of the Sub-Inspector is sanctioned in the interests of public service.

G. H. MANNOOCH,

Deputy Inspector-General of Police (offg.).

Dacca Division—Dacca.

No. 3346R.—17th September 1936.—In exercise of the power delegated to me by Government notification No. 10106L.R., dated the 14th July 1936, and with reference to notification No. 10092L.R., dated the 14th July 1936, sanctioning the establishment of Kuliarchar Debt Settlement Board, published at page 1817, Part I of the *Calcutta Gazette*, dated the 30th July 1936, I hereby order under section 4 of the Bengal Agricultural Debtors Act, 1935, that the said Board be dissolved.

W. H. NELSON, *Commissioner.*

Orders by the Deputy Inspector-General of Police, Dacca Range.

Dacca.—No. 3770.—17th September 1936. —Sub-Inspector Mati Lal De of the District Intelligence Branch, Dacca, is appointed to act, until further orders, as Inspector to fill one of the posts of Inspectors sanctioned for that District Intelligence Branch.

Babu Jogendra Kumar Sen (Honorary Deputy Superintendent), Inspector, District Intelligence Branch, Mymensingh, is granted 21 days' leave on average pay with effect from the date from which he is permitted to avail himself of it.

Sub-Inspector Ambica Charan Basu of the District Intelligence Branch, Mymensingh, is appointed to act as Inspector in the vacancy.

A. D. GORDON,

Deputy Inspector-General of Police.

Presidency Division—Calcutta.

No. 2211R.G.—10th September 1936.—Babu Shamapada Bhattacharjee, Sub-Deputy Collector, Khulna, is granted leave on average pay for three days, under rule 81 (*b*) (*ii*) of the Fundamental Rules, with effect from the 15th October 1936.

No. 2189R.G.—12th September 1936.—This office notification No. 2123R.G., dated the 4th September 1936, transferring Babu Ajit Kumar Sen, Sub-Deputy Collector and Circle Officer, Jangipur, Murshidabad, to Sadar, 24-Parganas, is cancelled.

No. 2196R.G.—12th September 1936.—Maulvi M. Ibrahim Hossain, Sub-Deputy Collector and Circle Officer, Bagerhat, Khulna, is temporarily transferred to Sadar, Murshidabad.

This cancels this office notification No. 2087R.G., dated the 31st August 1936, transferring him to Jangipur, Murshidabad, as Circle Officer.

No. 2218R.G.—14th September 1936.—Maulvi Musharaff Hussain, Sub-Deputy Collector and Circle Officer, Maherpur, Nadia, is transferred to the Ranaghat subdivision of that district as Circle Officer.

No. 2223R.G.—14th September 1936.—Babu Sasanka Sekhar Mazumdar, Sub-Deputy Collector and Circle Officer, Ranaghat, Nadia, is transferred to the North Circle of the Maherpur subdivision of that district as Circle Officer.

No. 2255R.G. — 15th September 1936. — Babu Amar Nath Mukherjee, Sub-Deputy Collector, Jhenidah, Jessore, is granted leave on average pay for thirteen days, under rule 81 (*b*)(*ii*) of the Fundamental Rules, with effect from the 31st October 1936.

No. 2261R.G. — 15th September 1936. — Babu Deb Narayan Mukherjee, Sub-Deputy Collector, Narail, Jessore, is granted leave on average pay for thirteen days, under rule 81 (*b*)(*ii*) of the Fundamental Rules, with effect from the 31st October 1936.

No. 2280R.G.—17th September 1936.—Maulvi A. K. M. Abdul Latif, Sub-Deputy Collector, Bongaon, Jessore, is granted leave on average pay for thirteen days, under rule 81(*b*)(*ii*) of the Fundamental Rules, with effect from the 31st October 1936.

No. 2286R.G.—17th September 1936.—Babu Sudhir Chandra Mukharji, Sub-Deputy Collector and Circle Officer, Mahespur Circle, Bongaon, Jessore, is granted leave on average pay for thirteen days, under rule 81(*b*)(*ii*) of the Fundamental Rules, with effect from the 31st October 1936.

No. 2294R.G.—18th September 1936.—Babu Harendra Kumar Ghose, Sub-Deputy Collector and Maintenance Officer, Lalbagh, Murshidabad, is granted leave on average pay for thirteen days, under rule 81 (*b*) (*ii*) of the Fundamental Rules, with effect from the 31st October 1936.

No. 2299R.G.—18th September 1936.—Babu Rajendra Narayan Rakshit, Sub-Deputy Collector, Sadar, Nadia, is granted leave on average pay for thirteen days, under rule 81 (*b*) (*ii*) of the Fundamental Rules, with effect from the 31st October 1936.

A. J. DASH, *Commissioner.*

Alipore, the 14th September 1936.

No. 24/36-12-V. S.-G.—It is hereby notified for general information that, under sub-section (*2*) of section 6 of the Bengal Village Self-Government Act (Bengal Act V of 1919), the following gentlemen have been duly elected to be members of the Magrahat union board in police-station Magrahat in the Diamond Harbour subdivision in the district of 24-Parganas:—

Magrahat union board.

Maulvi Keramat Ali Naskar.
Babu Radharaman Sarkar.
Babu Bishnupada Halder.
Maulvi Habibar Rahman Naskar.
Babu Sarat Chandra Halder.
Maulvi Khalilar Rahman Fakir.

No. 24/36-13 V. S.-G.—It is hereby notified for general information that, under sub-section (*3*) of section 6 of the Bengal Village Self-Government Act (Bengal Act V of 1919), the following gentlemen have been appointed to be members of the Magrahat union board in police-station Magrahat in the Diamond Harbour subdivision in the district of 24-Parganas:—

Magrahat union board.

Maulvi Golam Lutfar Akhan.
Babu Haripada Bairagi.
M. Ghyasuddin Khan.

Alipore, the 19th September 1936.

It is hereby notified for information of the public that Maulvi Meer Mahbub Ali has been duly elected to the managing committee of the Taki Government High English School as a representative of the teachers attached thereto.

R. GUPTA, *Addl. District Magistrate.*

Orders by the Deputy Inspector-General of Police, Criminal Investigation Department.

Calcutta. — No. 10955. — 14th September 1936.—Sub-Inspector Jatindra Nath Sanyal is appointed to act as Inspector with effect from 4-9-1936, p.m., *vice* Maulvi Mumtazuddin Talukdar, Inspector, transferred to the 24-Parganas.

C. E. S. FAIRWEATHER,
Deputy Inspector-General of Police (offg.).

Rajshahi Division—Jalpaiguri.

No. 3683J.—14th September 1936.—Babu Dinesh Chandra Sen Gupta, Sub-Deputy Collector, Pabna, is allowed leave on average pay for fifteen days, under rule 81 (*b*) (*ii*) of the Fundamental Rules, with effect from 3rd September 1936 or any subsequent date on which he may avail himself of the leave.

No. 3688J.—14th September 1936.—Babu Rai Mohan Samanta, Sub-Deputy Collector, on leave, posted to Rajshahi Division in Government notification No. 10703A., dated the 10th September 1936, is transferred to Dinajpur Sadar to work in the general line.

The transfer is made in the public interest.

Corrigendum.—No. 4442M.—16th September 1936.—This office notification No. 4101M., dated the 28th August 1936, published at page 1822, Part I of the *Calcutta Gazette*, dated the 30th July 1936, regarding appointment of Maulvi Samiruddin Sarker as a member and Chairman of the Nasarathpur Debt Settlement Board in place of Maulvi Nasiruddin Sarker in the district of Dinajpur is hereby cancelled.

L. R. FAWCUS, *Commissioner (offg.).*

Jalpaiguri, the 9th September 1936.

No. 8475G.—It is hereby notified for general information that, under rule 32 of the Election Rules framed under section 138(*a*) of the Bengal Local Self-Government Act, III (B. C.) of 1885, the following dates and hours are fixed for holding election of members for the local board of Jalpaiguri Sadar in the following thanas of the Sadar subdivision in the district of Jalpaiguri:—

Sadar local board.

Time of election—11 a.m. to 3 p.m. (local).

Date of election—28th November 1936.

Rajganj thana.
Pachagarh and Tetulia thanas.
Debiganj thana.
Bodeswari-Berubari thana.
Jalpaiguri thana.
Boda thana.
Patgram thana.
Mainaguri thana.
Dhupguri thana.

R. H. HUTCHINGS, *Dy. Commissioner.*

Pabna, the 19th September 1936.

It is hereby notified for general information that, under section 13 of the Bengal Village Self-Government Act, 1919 (Bengal Act V of 1919), Munshi Karim Box Sarkar of Kawakhola has been duly elected to be a member of Kawakhola union board under the Sirajganj police-station in the Sirajganj subdivision of the district of Pabna, *vice* Maulvi Basir Uddin Talukdar, deceased.

MD. MAHMUD, *District Magistrate.*

Registered No. C207

The Calcutta Gazette

THURSDAY, SEPTEMBER 24, 1936.

PART IA

Orders and Notifications by the Government of India republished for general information.

DEPARTMENT OF INDUSTRIES AND LABOUR.

NOTIFICATIONS.

Simla, the 8th September 1936.

No. L.-3033.—The following draft of certain further amendments to the Workmen's Compensation Rules, 1924, which the Governor-General in Council proposes to make in exercise of the powers conferred by section 32 of the Workmen's Compensation Act, 1923 (VIII of 1923), is published as required by section 34 of the said Act for the information of persons likely to be affected thereby, and notice is hereby given that the said draft will be taken into consideration on or after the 15th day of December 1936. Any objection or suggestion which may be received in respect of the draft before the date specified will be considered by the Governor-General in Council:—

Draft Amendments.

1. After rule 19 of the said Rules the following rules shall be inserted, namely:—

"19A. *Production of documents.*—(*1*) Any document which the applicant desires to produce in evidence and which is in his possession or power shall be appended to the application.

(*2*) Any other document which any party proposes to use in evidence and which is in that party's possession or power shall be produced at the first hearing of the case.

(*3*) A document which is not produced at the time specified in sub-rule (*1*) or sub-rule (*2*) as the case may be shall not, without the leave of the Commissioner, be received in evidence on behalf of the party who should have produced it.

(*4*) Nothing in this rule applies to any document which is produced for the purpose of cross-examining a witness or is handed to a witness to refresh his memory.

19B. *Application presented to wrong Commissioner.*—(*1*) If it appears to the Commissioner on receiving an application that it should be presented to another Commissioner, he shall return the application to the applicant after endorsing upon it the date of the presentation and return and the reasons for returning it.

(*2*) If it appears to the Commissioner at any subsequent stage that an application should have been presented to another Commissioner, he shall send the application to the Commissioner empowered to deal with it and shall inform the applicant (and the opposite party, if he has received a copy of the application under rule 23), accordingly."

2. In rule 38 of the said Rules, the words and figures "Order VII, rules 9 to 18" shall be omitted and after the word and figures "Order XIII" the words and figures "rules 3 to 10" shall be inserted.

Simla, the 10th September 1936.

No. L3038.—In exercise of the power conferred by sub-section (*3*) of section 5 of the Tea Districts Emigrant Labour Act, 1932 (XXII of 1932), the Governor General in Council is pleased to fix three rupees as the rate of the emigrant labour cess to be levied in respect of the entry into Assam of each assisted emigrant for the year commencing on 1st October 1936 and ending on 30th September 1937.

A. G. Clow,
Secy. to the Govt. of India.

DEPARTMENT OF COMMERCE.

NOTIFICATIONS.

REGISTRATION OF ACCOUNTANTS.

Simla, the 12th September 1936.

No. 2-A. (16)/36.—In pursuance of sub-rule (2) of rule 14 of the Auditor's Certificates Rules, 1932, it is hereby notified that in exercise of the powers conferred by clauses (*a*) and (*b*) of sub-rule (1) of the said rule, the Governor-General in Council has been pleased to remove the names of the following gentlemen, with effect from the 1st July 1936, from the Register of Accountants:—

Removed permanently.

1. Mr. Debendra Nath Mukerjee, Calcutta, deceased.
2. Mr. Krishnamurti Ekambaram, Madras (deceased).

Removed temporarily under clause (a) of sub-rule (1) of rule 14.

1. Sir Hugh Golding Cocke, Kt., Bombay.
2. Mr. Charles Watts, Delhi.
3. Mr. Thomas Law, Calcutta.
4. Mr. Frederick Walter Davidson Allan, Rangoon.
5. Mr. James Stuart Smith, Rangoon.
6. Mr. Dines Charan Sen, Calcutta.
7. Mr. P. S. Narayanan, Coimbatore.

Removed temporarily under clause (b) of sub-rule (1) of rule 14.

1. Mr. Martin Damer Dawson, Delhi.
2. Mr. William Doull, Rangoon.
3. Mr. Alagarai Narayana Ramachandran, Madras.
4. Mr. N. P. Subramanian, Rangoon.
5. Mr. B. B. Khambatta, Bombay.

No. 4-A. (4)/36.—In pursuance of rule 39 of the Auditor's Certificates Rules, 1932, it is hereby notified that the Governor-General in Council has been pleased to remove from the List of Approved Accountants, with effect from the dates specified, the names of the following gentlemen who have ceased to practise as public accountants, namely:—

Mr. Debendra Nath Mukerjee, Messrs. B. Mukerjee and Company, Calcutta—From the 1st July 1936.

Mr. William Battersby Parks, Messrs. Ford, Rhodes and Parks, Bombay—From the 24th July 1936.

Mr. Behramji Manekji Modi, Messrs. S. B. Billimoria and Company, Bombay—From the 24th August 1936.

No. 12-A. (6)/35.—In exercise of the powers conferred by sub-section (*2*) of section 144 of the Indian Companies Act, 1913 (VII of 1913), the Governor-General in Council is pleased to direct that the following further amendment shall be made in the Auditor's Certificates Rules, 1932, the same having been previously published as required by the said sub-section, namely:—

For rules 63 and 77 of the said Rules, the following rules shall be substituted, respectively, namely:—

"63. Members of the Board (other than members who are in the service of Government and are entitled to travelling and daily allowances under the ordinary rules) shall receive travelling allowance and daily fee for attending the meetings of the Board and of the Committees thereof at the following rates:—

Travelling allowance.—One and a half of the first class fare by rail to and from the place of meeting and 1-3/5ths of the first class fare by steamer for any portion of the journey performed by steamer.

Daily fee.—Fifty rupees per day for the days of attendance at a meeting, provided that in the case of a member resident at the place of the meeting, the rate shall be Rs. 30 per day".

"77. Members of the Board (other than members who are in the service of Government and are entitled to travelling and daily allowances under the ordinary rules) shall receive travelling allowance and daily fee for attending the meetings of the Board at the following rates:—

Travelling allowance.—One and a half of the first class fare by rail to and from the place of meeting and 1-3/5ths of the first class fare by steamer for any portion of the journey performed by steamer.

Daily fee.—Thirty rupees per day for the days of attendance at a meeting, provided that in the case of a member resident at the place of the meeting the rate shall be Rs. 20 per day".

H. Dow,
Addl. Secy. to the Govt. of India.

HOME DEPARTMENT.

NOTIFICATION.

PUBLIC.

Simla, the 20th August 1936.

No. F. 39/2/35.—In pursuance of section 196 of the Code of Criminal Procedure, 1898 (Act V of 1898), the Governor General in Council is pleased to empower, in the provinces mentioned in column (1) of the annexed schedule, the officers specified in column (2) thereof to order or authorise the making of complaints in respect of offences specified in the corresponding entries in column (3) thereof.

Schedule.

Name of Province. (1)	Officers. (2)	Offences. (3)
*	*	*
Bengal ..	Chief Presidency Magistrate, Calcutta, in the City of Calcutta.	Offences punishable under sections 171-D, 171-E and 171-F of the Indian Penal Code.
	All District Magistrates within their respective jurisdictions.	Ditto ditto.
*	*	*

J. A. THORNE,
Joint Secy. to the Govt. of India.

Registered No. C207

The Calcutta Gazette

THURSDAY, SEPTEMBER 24, 1936.

PART IB

Educational Notices.

Medical College, Calcutta.

Calcutta, the 11th September 1936.

Dr. Chandra's Scholarship in Materia Medica and Therapeutics.

The above scholarship of the value of Rs. 361-8 will be awarded to the best successful candidates who will be selected at an examination to be held this session in December 1936.

(1) The examination is open to all senior students of the Medical College, Calcutta.

(2) Any *ex*-senior student of the Medical College who may at the time of the examination be studying at any Medical College in India or Europe.

(3) Any graduate or Licentiate in Medicine of whatever standing and however employed who may have obtained either in Europe or in India a medical diploma or degree entitling him to practise Medicine, provided that each graduate or licentiate at some time received a portion of his professional education in the Medical College, Calcutta.

Certificates to the effect that the candidate fulfils the above requirements, together with one of good moral character signed by a person of respectability, should be submitted to the Principal, Medical College, Calcutta, on or before the 10th October 1936.

Candidates are required to write an essay on "The Pharmacological Action of the alkaloids of Rauwolfia Serpentina" and submit the same to the Professor of Pharmacology, Medical College, Calcutta, by the 23rd December 1936.

Personal attendance at the examination is not necessary.

Preference will be given to the candidates whose thesis bears evidence of original investigation on the subject.

T. C. Boyd, Lt.-Col., I.M.S.,
Principal, Medical College, Calcutta.

Presidency Division.

Extension of time for submission of application for the Test Examination of private candidates for the Matriculation Examination to be held by the Inspector of Schools, Presidency Division.

It is notified for public information that candidates who failed to submit their applications to me by 31st August 1936, may now appeal through my office to the Registrar, Calcutta University, for necessary permission on or before 30th September 1936, stating reasons in full for their failure to submit their applications in time. The appeal should be accompanied by the formal application prescribed by this office in the rules published under the date of 13th July 1936, complete with all particulars and papers.

M. A. Jaafar,
Inspector of Schools, Presidency Division.

Orders by the Hon'ble President and Council of the Bengal Sanskrit Association.

NOTICE.

The Sanskrit First Examination will be held on Monday and Tuesday, the 1st and the 2nd February 1937, corresponding to the 19th and the 20th Magh 1343 B. S.

2. The Sanskrit Second Examination will be held on Wednesday and Thursday, the 3rd and the 4th February 1937, corresponding to the 21st and the 22nd Magh 1343 B.S.

3. Candidates desiring to appear at the Sanskrit First and Second Examinations should apply in the prescribed form with a fee of Re. 1 for the First and Rs. 2 for the Second Examinations, on or before the 2nd December 1936 (the 16th Agrahayan 1343 B.S.) to the Secretary of the examination centre where they intend to present themselves for the examination. No application will be entertained by the Secretaries of local Samajas after the 2nd December 1936.

4. *Adhyapakas of tols should apply for printed copies of application forms to the Secretary of the examination centre where they intend to send up their pupils for examination*, and the Secretary will supply the printed copies of application forms in due course.

5. The subject of examination with their subdivision or group (*e.g.*, Vyakaran—Laghukaumudi, Saraswat, etc., or Nyaya *ka*, *kha*, etc.) must be distinctly and definitely written in the application form. *In absence of such details the application will be liable to rejection without any further reference to the candidate or his* Adhyapaka. The *Adhyapakas* are, therefore, requested to exercise great watchfulness in revising the application forms of their candidates before they are sent to the Secretaries of the local Samajas (in the case of the First and Second Examinations) or of the Bengal Sanskrit Association (in the case of the Title Examination) that all details regarding the specification of subjects and their groups are duly attended to.

6. No change of subject will, under any circumstances, be allowed after the registers of candidates for the First and Second Examinations have been despatched to the office of the Bengal Sanskrit Association by the Secretaries of the local Samajas or after the application forms for the Title Examination have been received by the office of the Bengal Sanskrit Association.

7. Applications for change of centre will not be considered even on payment of the usual fee of Rs. 2 if they are not received *within* the 6th January 1937, corresponding to 22nd Paus 1343 B.S.

8. Candidates disirous of appearing at more than one examination in one year in one subject must take special permission from the Secretary, Bengal Sanskrit Association, *before* they submit their forms and fees to the Secretaries of the local Samajas (in the case of the First and the Second Examinations) or to the Secretary of the Bengal Sanskrit Association (in the case of the Title Examination).

9. The Secretaries of local Samajas or the Superintendents of Examinations should, on no account, allow any candidate to sit for examination unless he can show evidence that he has been authorised by the Secretary, Bengal Sanskrit Association, to sit for the examination at *that* centre.

10 Candidates and their *Adhyapakas* are hereby informed that the office of the Bengal Sanskrit Association neither directly issues any application forms nor entertains the same, so far as the First and Second Examinations are concerned. *The Association office does not undertake any responsibility in case of loss or otherwise of the fees and forms for the First and Second Examinations if these are sent direct to it.*

11. The Sanskrit Title Examination will be held on Saturday, the 6th February, Monday, the 8th February, Tuesday, the 9th February, and Wednesday, the 10th February, corresponding to 24th, 26th, 27th and 28th Magh 1343 B.S. An optional examination in English Grammar, Translation and Composition will be held on Thursday, the 11th February 1937 (the 29th Magh 1343 B.S.).

12. Applications for permission to appear at the Title Examination should be made to the undersigned on or before the 7th December 1936 (the 21st Agrahayan 1343 B. S.), with the usual fee of Rs. 3 only. No application will be entertained with a fee of Rs. 3 if both the fee and the application do not reach the office within the 7th December 1936. Applications will be received with a fee of Rs. 3-8 from the 7th December 1936 to the 21st December 1936, after which no further application will be entertained.

13. Applications for printed copies of Title Examination application forms should be made to the Secretary, Bengal Sanskrit Association.

S. N. DAS GUPTA,
Secretary, Bengal Sanskrit Association.

Board of Intermediate and Secondary Education, Dacca.

Ramna, the 3rd September 1936.

NOTIFICATION.

No 6320.—It is hereby notified for general information that the age-limit of the candidates for the High School and High Madrasa Examinations of the Board is abolished with effect from the examinations to be held in 1937.

J. N. ROY, *Secretary (offg.).*

Board of Intermediate and Secondary Education, Dacca.

Ramna, the 9th September 1936.

NOTIFICATION.

No. 6499.—Subject to the usual condition of good conduct and satisfactory progress, the Nawab Ahsanullah Continuation Scholarship of the value of Rs. 10 a month is awarded to Muhammad Rahman Ali, who passed the Intermediate Examination of the Board in 1936, from the Dacca Intermediate College.

2. The scholarship takes effect from the 1st July 1936 and is tenable for two years at the University of Dacca.

J. N. ROY, *Secretary (offg.)*

Board of Intermediate and Secondary Education, Dacca.

Ramna, the 10th September 1936.

NOTIFICATION.

Special Senior Scholarships for Muhammadans.

No. 6528.—The following students are awarded Special Senior Scholarships for Muhammadans on the results of the Intermediate Examination, 1936, conducted by the Board of Intermediate and Secondary Education, Dacca. The scholarships take effect from the 1st July 1936 and are tenable for three years.

[Principals of Colleges and the Registrar, University of Dacca, are requested to report to the Secretary, Board of Intermediate and Secondary Education, Dacca, the names of the scholarship-holders as soon as they are admitted. No scholarship can be drawn until this information is available.]

Six scholarships of Rs. 10 a month each.

1. Arfanuddin Ahmad—Dacca Intermediate College.
2. Khwaja Muhammad Kaiser—Dacca Intermediate College.
3. Muhammad Afsaruddin Bepari—Jagannath Intermediate College.
4. Abul Khair Muhammad Faiz—Dacca Intermediate College.
5. Muhammad Ifazuddin—Dacca Intermediate College.
6. Habibur Rahman, II—Dacca Intermediate College.

J. N. ROY, *Secretary (offg.)*.

Dacca Division.

Ramna, Dacca, the 19th September 1936.

Programme for the Middle Scholarship Examination, 1936.

Tuesday, 17th November—

10 a.m. to 12-30 p.m.—

	Marks.
Vernacular Literature, Grammar and Composition ...	120
Bengali Reading (Oral) ...	15
1 p.m. to 1-30 p.m.—	
Bengali Dictation	15
1-30 p.m. to 3-30 p.m.—	
Science	50

Wednesday, 18th November—

10 a.m. to 12-30 p.m.—	
Arithmetic	100
1 p.m. to 3 p.m.—	
Geometry	50

Thursday, 19th November—

10 a.m. to 12-30 p.m.—	
History	60
1 p.m. to 3 p.m.—	
Hygiene	50

Friday, 20th November—

10 a.m. to 12-30 p.m.—	
Geography	40
Map-pointing (Oral)	20

Saturday, 21st November—

For Middle English School Boys only—

10 a.m. to 1 p.m.—	
English Literature, Grammar, Composition and Translation	100
English Reading (Oral) ...	15
English Conversation (Oral) ...	15
For Middle Vernacular School Boys only—	
Document Writing and Mahajani Accounts	150
1 p.m. to 1-30 p.m.—	
English Dictation	20
2 p.m. to 3 p.m.—	
Drawing	30

A. H. KHAN CHAUDHURY,
Inspector of Schools, Dacca Division.

Government Commercial Institute.

11, Hastings Street, Calcutta, the 15th September 1936.

NOTIFICATIONS.

Sanction is hereby accorded to the award of three scholarships of the value of Rs. 20 each per month for one year, with effect from 1st June 1936, to the following students of the second year day class of the Government Commercial Institute, Calcutta, on the usual conditions of good conduct and satisfactory progress:—

1. Durga Charan Dutta.
2. Amiya Kumar Roy
3. Atal Behari Bose.

Sanction is hereby accorded to the award of three scholarships of the value of Rs. 12 each per month for one year, with effect from 1st June 1936, to the following students of the first year day class of the Government Commercial Institute, Calcutta, on the usual conditions of regular attendance, good conduct and satisfactory progress:—

1. Phiroze T. Dustoor.
2. Anil Krishna Mitra.
3. Dhirendra Narayan Roy Chowdhury.

P. ROY, *Secretary*,
Govt. Commercial Institute Board.

University of Dacca.

Ramna, Dacca, the 10th September 1936.

NOTIFICATION—No. 2073/Ex.

The next B.L. Examination will commence on the 25th January 1937, and will be held on the dates and time notified in the time-table.

2. Applications for admission to the examination shall be made on the printed entry forms which will be obtainable at the office of the Provost of the hall to which the student belongs. The entry form, after it has been duly filled in and signed by the candidates and countersigned by the Dean of the Faculty of Law, shall be presented by the candidate to the Provost of his hall not later than Thursday, the 26th November 1936.

3. Candidates shall submit their University diplomas or the Preliminary B.L. Certificates, as the case may be, along with their entry forms to the Provost for verification of the correctness of their names in the entry forms. Candidates must take back their diplomas or certificates within a fortnight after the examination is over, failing which the Provosts' offices will not be responsible for their safe-keeping. The entry forms will be checked by the Provosts in respect of all the entries made by the candidates in the entry forms. The date of first admission of candidates into the University will be checked by the Provosts with reference to the applications for admission of the candidates concerned. In the case of candidates, who have been granted special permission to appear at the examination, the authority granting them such permission should be quoted in the entry forms of the candidates and duly attested by the Provost. The checking of entry forms by the Provosts will be regarded as final. The entry forms after they have been checked by the Provosts will be forwarded by them to the Accounts office of the University not later than Friday, the 3rd December 1936.

4. Candidates who are required to pay half the usual examination fees under section 32 of Chapter XXXVII of the Ordinances and Regulations, must obtain at the time of depositing fees, a certificate on the examination entry form, from the Examination Section of the University, to the effect that they submitted their examination fees but did not appear at the examination.

5. Candidates shall deposit their proper examination fees and all other dues up to the 5th instalment, 1936, into the Accounts office of the University on the dates noted below for certification that all University dues including the seat-rent, tuition fees, etc., have been paid in full.

Dates for the payment of fees.

Time—11-30 a.m. to 2 p.m.

Dacca Hall—7th and 8th December 1936.

Jagannath Hall—7th and 8th December 1936.

Salimullah Muslim Hall—7th and 8th December 1936.

6. The fees for the different examinations are noted below:—

(*i*) Preliminary B.L. Examination—Rs. 45.
(*ii*) Final B.L. Examination—Rs. 45.
(*iii*) B.L. Examination for candidates appearing in eleven papers—Rs. 90.

The fee for Supplementary Examination is half the ordinary examination fee.

7. The Accounts office will send all the entry forms of the candidates, who have paid their examination fees and other dues, if any, to the Examination Section by Monday, the 21st December 1936, at the latest.

8. Examination fees and other dues must be paid on the due dates and no extension of time will be allowed under any circumstances whatsoever. Candidates are required to pay the examination fees and other dues into the Accounts office of the University. If the fees are sent by postal money order, full details of candidates must be given, and the correct amount sent; otherwise, the money order will be refused. Fees sent in any other way, e.g., by registered or insured post, will not be accepted.

M. I. BORAH, *Registrar (offg.)*.

EDUCATION DEPARTMENT, BENGAL.

NOTIFICATION.

No. 6 T.B.—29th August 1936.—In accordance with the Government (Education Department) notification No. 1665 Edn., dated the 16th November 1920, the following list of text-books, approved by this department for use in all classes of Primary Schools in the Presidency of Bengal, is published for general information. These books are approved for a period of four years from January 1937.

The lists of text-books published with this office notifications Nos. 2T B., dated the 16th June 1930, and 5T.B., dated the 10th November 1930, are hereby cancelled.

The syllabuses for Infant Class, Class I and Class II in the Revised Curriculum for Primary Schools (and Maktabs), now in force in both parts of this Presidency, shall be adopted, respectively, in the Infant Class, Class I and Class II of Middle Schools and the corresponding Classes of High Schools for both boys and girls. Text-books approved by this department for Infant Class, Class I and Class II of Primary Schools (and Maktabs) will be applicable to the corresponding Classes of Secondary Schools.

District Boards and District School Boards are requested to choose books from the following list for use in Primary Schools under their control. In making this choice, it is hoped that care will be taken to ensure that undue patronage of either individual authors or publishing houses is avoided. Inspecting Officers should not themselves recommend books directly to Primary Schools.

J. M. BOTTOMLEY,
Director of Public Instruction, Bengal.

INTRODUCTORY NOTES.

(*i*) The compulsory subjects in all Primary Schools are the following:—

(*a*) Reading.
(*b*) Writing.
(*c*) Arithmetic.
(*d*) Geography.
(*e*) History.
(*f*) Hygiene (for Boys) or Hygiene and Domestic Economy (for Girls).
(*g*) Observation Lessons (for Boys).
(*h*) Physical Training (for Boys) or Needlework (for Girls).

The Primary (Maktab) Final Examination will be held at the end of Class IV and the subjects of examination will be the first six subjects. The preliminary Primary (Maktab) Scholarship (Lower Primary) Examination will be held at the end of Class II, and the subjects of examination will be the first four and the sixth subjects.

In addition, for the Primary (Maktab) Final Examination two of the following optional subjects should be taken:—

(*a*) Drawing,
(*b*) Manual Work,
(*c*) Science or Nature Study based on School Gardening,
(*d*) English, and
(*e*) Zamindary and Mahajani Accounts,

and for the Preliminary Primary (Maktab) Scholarship Examination any one of the following optional subjects should be taken:—

(*a*) Drawing.
(*b*) Manual Work.

(*ii*) A boy from a Primary School intending to enter a High or Middle English School should leave at the end of Class II. A boy may also enter a High or Middle English School at the end of Class IV, provided he has taken English as an optional subject in Classes III and IV.

(*iii*) Prior to the publication of a new edition, all additions, alterations or omissions in the text of a sanctioned book must receive the sanction of the Text Book Committee. Any deviation from these instructions will render a book liable to immediate removal from the approved list of text-books.

(*iv*) No name except that of the author and publisher should be allowed on cover or title page (*i.e.*, no name of editor, reviser, or writer of foreword or preface should be allowed).

(*v*) Mat (*i.e.*, dull) and not shining paper should be used.

(*vi*) Misleading statements on the cover or title page should be avoided. It should be clearly mentioned whether the book is approved as a text-book, a supplementary reader or a prize and library book.

(*vii*) Any deterioration in paper, printing, binding or illustrations of an approved book will render it liable to immediate withdrawal from the list.

(*viii*) Price—

(*a*) One anna and six pies for each 32 pages of printed matter *plus* a concession of 40 per cent.

This rate will be applicable to Bengali readers and text-books on History, Science, Hygiene, Arithmetic and Zamindary and Mahajani Accounts.

(*b*) Two annas for each 32 pages of printed matter *plus* a concession of 40 per cent.

This rate will be applicable to English readers and text-books on Geography.

(*c*) One anna and six pies for a Bengali copy book.

(*d*) Two annas and three pies for an English copy book.

TEXT-BOOKS.

I.—Compulsory Subjects.

(*a*) READING—BENGALI.

(*Infant Class.*)

1. Akshar Parichaya. Ashutosh Dev. (Prabodh Chandra Majumdar & Brothers, Calcutta.)
2. Shishu Sakha, Akshay Kumar Ray. (Dacca Library, Dacca.)
3. Niti Sudha, Part I. Upendra Nath Das. (S. C. Ghosh, Calcutta.)
4. Khokar Sathi. Anil Chandra Datta. (The Author, Calcutta.)
5. Pratham Path. Rai Rasamay Mitra Bahadur. (Santi Kumar Sarkar, Calcutta.)
6. Niti O Shiksha. Mohammad Azizur Rahman. (Mukhdumi Library, Calcutta.)
7. Shishutosh. Asutosh Dhar. (Brindaban Dhar & Sons, Ltd., Calcutta.)
8. Khoka Khukur Bai. Gholam Mustafa. (Islamia Library, Calcutta.)
9. Nutan Barna Parichaya. Abani Bhusan Chatterjee. (Dinataran Mukherjee, Calcutta.)
10. Barna Shiksha. Nrisingha Chandra Mukherjee & Shishir Kumar Mukherjee. (Biswanath Mukherjee, Calcutta.)
11. Mohan Path. Gangesh Sanyal. (Nalini Mohan Sanyal, Nadia.)
12. Sachitra Barna Parichaya. Amitabala Biswas. (N. C. Neogi, Calcutta.)
13. Saral Barnabodh. Madhu Sudan Dev. (P. C. Majumdar & Brothers, Calcutta.)
14. Khelar Sathi. Prativa Ray. (Bina Library, Calcutta.)
15. Shishuranjan Barna Shiksha. Mozammel Haque. (Moslem Publishing House, Calcutta.)
16. Saral Barna Parichaya. Jatindralal Basu. (Sailendra Nath Ghosh, Dacca.)
17. Adarsha Barna Parichaya. Shamsun Nahar. (Bulbul Publishing House, Calcutta.)
18. Balya Path. Gopal Chandra Banerjee. (A. C. Banerjee, Calcutta.)
19. Barna Manjari. Sitanath Bidyabenode. (Sadhana Library, Dacca.)
20. Shaishab Shiksha. Parimal Kumar Ghosh. (Nurul Haque, Dacca.)
21. Shishu Sopan. Ebrahim Khan. (M. R. Khan, Mymensingh.)
22. Shaishab Shiksha. Sarat Kumari Devi. (Student's Library, Dacca.)

23. Nutan Shishu Path. Ishan Chandra Ghosh. (Hem Chandra Ghosh, Calcutta.)
24. Sahityamala Shishu Path. Khan Sahib Abdur Rub Chaudhury. (Provincial Library, Calcutta.)
25. Nitikatha-Shishupath. Benoy Kumar Ganguli. (Amiya Ranjan Mukherjee, Dacca.)
26. Shishu Sahitya. Mahbub Ali Chaudhury. (Mosharaf Hossain, Dacca.)
27. Balya Path, Part I. Khagendra Nath Mitra, Rai Bahadur. (B. Banerjee & Co., Calcutta.)
28. Sachitra Barna Path. Khan Bahadur Muhammad Mobarak Ali. (Mukhdumi Library, Calcutta.)
29. Sachitra Barna Parichaya. Sushil Kumar Mukherjee. (Sen Brothers & Co., Calcutta.)
30. Nutan Barna Parichaya. Kazi Akram Hossain. (Itikatha Book Depot, Calcutta.)
31. Barna O Banan Shiksha. Manmatha Mohan Basu. (K. D. Dutt, Calcutta.)
32. Barnamala O Banan Shiksha. Suryya Kumar Adhikary & Sushil Kumar Adhikary. (B. Banerjee & Co., Calcutta.)
33. Barna Path. Khan Bahadur Daliluddin Ahmad. (Victoria Library, Dacca.)
34. Hate Khari, Parts I-II. Jatindra Mohan Chatterjee. (Author, Calcutta.)
35. Shishu Path. Mah-fuzar Rahman Khan. (North Bengal Publishing House, Calcutta.)
36. Nabin Barna Parichaya. Sarojranjan Banerjee. (K. D. Dutt, Calcutta.)
37. Barna Manjari. Kazi Abdur Rashid. (Provincial Library, Calcutta.)
38. Shishu Shiksha. Azizur Rahman Chaudhury. (Kohinoor Library, Dacca.)
39. Barna O Banan. Naba Krishna Bhattacharyya. (Brindaban Dhar & Sons, Ltd., Calcutta.)
40. Nutan Barnabodh. Mrinalini Mitra. (Kamala Book Depot, Ltd., Calcutta.)
41. Sachitra Balya Shiksha. Atahar Uddin Ahmed. (The Great Eastern Library, Calcutta.)
42. Barna O Banan Bodh. Kali Prosanna Vidyaratna. (Soor & Co., Calcutta.)
43. Saral Path, Part I. Manindra Mohan Basu. (Author, Calcutta.)
44. Adhunik Balya Shiksha. Shushila Sundari Ghosh. (Dharani Kanta Guha, Dacca.)
45. Shishu Path. Abdul Karim. (Karim Publishing House, Dacca.)
46. Pratham Path. Raj Chandra Pal. (K. D. Dutt, Calcutta.)

47. Saral Barna O Banan Parichaya, Parts I & II. Bishnupada Chakravarty. (Author, Chakravarty Sahitya Bhaban, Buz-Buz.)
48. Shishupath. Sudhansu Shekhar Mukherjee. (S. C. Bhattacharyya & Co., Calcutta.)
49. Balya Sakha. Sreemati Bina Devi. (Hemendra Nath Sen, Calcutta.)
50. Shishutosh. Mono Mohan Sen. (Hemendra Mohan Sen, Mymensingh.)
51. Shishutosh Barna Parichaya. Chaudhury Mosharraf Hossain. (Tajmahal Library, Calcutta.)
52. Nutan Path. Pranballav Basak. (Albert Library, Dacca.)

READING—HINDI.

(*For schools in which Hindi is taught.*)

1. Hindibodh. (Prabeshika.) Padamlal Pannalal Bakshi. (Indian Press, Ltd., Allahabad.)
2. Nabin Hindi Primer. Tejeswar Dutta Jauhari. (Calcutta Pustak Bhandar, Calcutta.)
3. Barna Bikash. Baij Nath Sinha. (Pustak Mandir, Calcutta.)
4. Akshar Bodh. (Macmillan & Co., Ltd., Calcutta.)
5. Akshar Jnan. Lala Sitaram. (Macmillan & Co., Ltd., Calcutta.)
6. Goenka Hindi Primer. Ram Kumar Goenka. (Ramkumar Goenka, Basack Street, Calcutta.)

READING—NEPALI.

(*For schools in which Nepali is taught.*)

Nepali Saun Akshar. (Macmillan & Co., Ltd., Calcutta.)

READING—TAMIL.

(*For schools in which Tamil is taught.*)

1. Tamil South Indian Primer. Harihar Aiyar. (Macmillan & Co., Ltd., Calcutta.)
2. South Indian Tamil First Reader. Dewan Bahadur S. Bavanandam Pillai. (Macmillan & Co., Ltd., Calcutta.)

READING—BENGALI.

(*Class I.*)

1. Niti Sudha, Part II. Upendra Nath Das. (S. C. Ghosh, Calcutta.)
2. Shishupath, Part I. Nabakrishna Bhattacharyya. (Students' Library, Calcutta.)

3. Supath, Part I. Khan Bahadur A. A. Abdul Baset. (Karim Publishing House, Dacca.)
4. Sachitra Shishu Sahitya, Part II. Kali Prasanna Bidyaratna. (Soor & Co., Calcutta.)
5. Sachitra Abhinaba Path, Part 1. Bibhu Charan Chatterjee. (New Bengal Press, Calcutta.)
6. Niti Guchha, Part I. Ranada Kanta Ray Chowdhury. (Nur Library, Khulna.)
7. Aloke Mala, Part I. Gholam Mustafa. (Islamia Library, Calcutta.)
8. Jnan Mukur, Part I. Priyadarshan Haldar. (Kamala Book Depot, Ltd., Calcutta.)
9. Path-Mala, Part I. Charu Chandra Banerjee. (Minerva Library, Dacca.)
10. Suniti Shiksha, Part I. Mozammel Haque. (Moslem Publishing House, Calcutta.)
11. Sukumar Path. Sudhanshu Mohan Chanda. (Author, Calcutta.)
12. Shiksha Manjari, Part I. Mahitosh Ray Chowdhury. (Kamala Book Depot Ltd., Calcutta.)
13. Supath, Part I. Prabodh Chandra Sen. (International Book Company, Calcutta.)
14. Adarsha Shishu Path, Part II. Jogindra Nath Basu and Ishan Chandra Ghosh. (N. Pal, Calcutta.)
15. Naba Kathamala, Part I. Surendra Nath Bhattacharyya. (Author, Dr. Chatterjee's Laboratory, Jessore.)
16. Mohan Path, Part I. Monoj Basu. (Biswanath Das, Calcutta.)
17. Sahitya Mukul, Part I. Sudhanshu Kumar Mitra. (Lakshmi Publishing House, Calcutta.)
18. Naba Jnanodaya, Part I. Phanibhusan Ghosh. (Ajit Kumar Ghosh, Calcutta.)
19. Sahitya Kusum, Part I. Krishnadhan De. (Ghosh & Co., Calcutta.)
20. Suchana. Priyanath Bidyabhusan. (Nur Library, Dacca.)
21. Prathamik Sahitya, Part I. Jagattaran Das. (Central Book Agency, Calcutta.)
22. Bangala Sopan, Part II. Sukumar Sen. (Nrityalal Seal's Library, Calcutta.)
23. Komal Path, Part I. Mosammat Sufia Khatun. (Prativa Library, Dacca.)
24. Shaishab Shiksha, Part I. Shashibhusan Chatterjee & Brahmananda Chatterjee. (S. B. Chatterjee & Sons, Calcutta.)
25. Sahitya Sopan, Part II. Rai Sahib Jagadananda Roy. (Brindaban Dhar & Sons, Ltd., Calcutta.)
26. Sahitya Kamal, Part I. Chandra Kanta Datta Saraswati. (Harendra Nath Seth, Calcutta.)
27. Naba Jnan Mukul, Part I. Ramdayal Chatterjee & Prabodh Chandra De. (Ramdulal Chatterjee, Calcutta.)

28. Shishutosh, Part I. Sarat Kumar Roy. (Roy & Co., Calcutta.)
29. Sathi, Part I. Nuruddin Ahmed. (Nur Library, Dacca.)
30. Pathshala Sahitya, Part I. Abdur Rashid. (Kohinoor Library, Dacca.)
31. Balak Path. Kanailal Pal. (Kanaklal Pal, Calcutta.)
32. Sahitya Path. Bhakti Prada Chatterjee. (New Bengal Press, Calcutta.)
33. Tosini. Krishnadayal Basu. (Author, Calcutta.)
34. Balya Path, Part II. Khagendra Nath Mitra, Rai Bahadur. (B. Bannerjee & Co., Calcutta.)
35. Path Guchha, Part I. Namita Devi & Prasanna Kumar Tagore. (Nani Gopal Chakravarty, Calcutta.)
36. Sahitya Mala, Part I. Biswapati Chaudhury. (Ganesh Chandra Ghosh, Calcutta.)
37. Saral Sahitya, Part I. Jogendra Nath Gupta. (Indian Publishing House, Calcutta.)
38. Sahitya Sree. Kishori Mohan Gupta. (Education Book Concern, Calcutta.)
39. Sucharu Path, Part I. Anil Chandra Ray & Dwijendra Chandra Das. (Nur Library, Dacca.)
40. Sahitya Mukul, Sreemati Saraju Devi. (Surendra Mohan Ray Chaudhury, Calcutta.)
41. Niti Katha, Part I. Benoy Kumar Ganguli. (Amiyaranjan Mukherjee, Dacca.)
42. Sahitya Kalika, Part I. Khan Bahadur Abdur Rahman Khan & Akshay Kumar Ray. (Dacca Library, Dacca.)
43. Sahitya Suravi. Satiprabha Basu. (M. Mansuruddin Bhuyan, Dacca.)
44. Sukhapath, Part I. Suresh Chandra Sen. (Pulin Chandra Sen, Dacca.)
45. Prathamik Bangala Sahitya, Part I. Madhu Sudan Dev. (P. C. Majumdar & Brothers, Calcutta.)
46. Amiya Path, Part I. Mahimamay Mitra. (Students' Library, Calcutta.)
47. Path-Kusum, Part II. Sarojranjan Banerjee. (Macmillan & Co., Ltd., Calcutta.)
48. Manimala, Part I. Bijan Behari Bhattacharyya. (D. N. Mandal & Bros., Calcutta.)
49. Shishu Sakha. Bimal Chandra Banerjee. (Author, Calcutta.)
50. Shaishab Shiksha, Part II. Sarat Kumari Devi. (Arun Chandra Roy, Dacca.)
51. Nutan Path, Part I. Jogindra Nath Sarkar. (City Book Society, Calcutta.)
52. Sahitya Prabha, Part I. Dinesh Chandra Datta & Suresh Chandra Datta. (Students' Library, Dacca.)
53. Sachitra Naba Shishupath, Part I. Purna Shashi Majumdar. (Amulya Ratan Banerjee, Calcutta.)

54. Saral Sahitya Path, Part I. Bhagabat Kumar Shastri. (K. D. Dutt, Calcutta.)
55. Sushiksha, Part II. Rai Sahib Akshoy Kumar Datta Gupta Kabiratna. (Brindaban Dhar & Sons, Ltd., Calcutta.)
56. Saral Path, Part II. Manindra Mohan Basu. (Author, Calcutta.)
57. Prathamik Sahitya, Part I. Hashmat Ali Chaudhury. (Dacca Library, Dacca.)
58. Saral Sahityabodh, Part I. Akshay Kumar Sarkar. (Longmans Green & Co., Ltd., Calcutta.)
59. Nutan Path, Part I. Kazi Abdur Rashid. (Provincial Library, Calcutta.)
60. Prathamik Shiksha Manjari, Part I. Dr. Md. Shahidullah. (Provincial Library, Dacca.)
61. Shishuranjan. Asutosh Chaudhury. (Popular Book Depot, Chittagong.)
62. Parimal Path, Part I. Pritikana Dattajaya. (Mitra Library, Calcutta.)
63. Sahaj Path, Part I. Shamsun Nahar. (Bulbul Publishing House, Calcutta.)

READING—HINDI.

(For schools in which Hindi is taught.)

1. Hindi-Bodh, Part I. Padam Lal Panna Lal Bakshi. (Indian Press, Ltd., Allahabad.)
2. Nabin Hindi Reader, Part I. Dr. Tejeswar Datta Jauhari. (Calcutta Pustak Bhandar, Calcutta.)
3. Hindusthani Reader, Part I. (Macmillan & Co., Ltd., Calcutta.)

READING—NEPALI.

(For schools in which Nepali is taught.)

Nepali Sahitya, Part I. Parash Mani Pradhan & Shesh Mani Pradhan. (Macmillan & Co., Ltd., Calcutta.)

READING—TAMIL.

(For schools in which Tamil is taught.)

South Indian Tamil, Reader II. Dewan Bahadur S. Bavanandam Pillai. (Macmillan & Co., Ltd., Calcutta.)

READING—BENGALI.

(Class II.)

1. Mohan Path, Part II. Manoj Basu. (Biswa Nath Das, Calcutta.)
2. Pathshala Sahitya, Part II. Abdur Rashid. (Kohinoor Library, Dacca.)

3. Prathamik Bangala Sahitya, Part II. Madhusudan Dev. (P. C. Majumdar & Bros., Calcutta.)
4. Sahitya Mukul, Part II. Sudhansu Kumar Mitra. (Lakshmi Publishing House, Calcutta.)
5. Supath, Part II. Khan Bahadur A. A. Abdul Baset. (Karim Publishing House, Dacca.)
6. Suniti Sopan, Part II. Sashadhar Vidyabhusan. (The Book Co., Ltd., Calcutta.)
7. Sucharu Path, Part II. Anil Chandra Roy & Dwijendra Chandra Das. (Nur Library, Dacca.)
8. Prathamik Sahitya, Part II. Hashmat Ali Chaudhury. (Dacca Library, Dacca.)
9. Sahitya Sopan, Part III. Rai Sahib Jagadananda Roy. (Brindaban Dhar & Sons, Ltd., Calcutta.)
10. Mukulika, Part II. Pandit Kokileswar Shastri. (Upendra Nath Dhar, Calcutta.)
11. Sahaj Path, Part II. Shamsun Nahar. (Bulbul Publishing House, Calcutta.)
12. Sachitra Shishu Sahitya, Part III. Kali Prasanna Bidyaratna. (Soor & Co., Calcutta.)
13. Sahitya Kamal, Part II. Chandra Kanta Datta Saraswati. (Harendra Nath Seth, Calcutta.)
14. Niti Sudha, Part III. Upendra Nath Das. (S. C. Ghosh, Calcutta.)
15. Prathamika, Part II. Jatindra Mohan Bagchi. (Mukundalal Chakravarty, Calcutta.)
16. Mukul Path. Digindra Nath Pathak. (Jnanprabha Bhandar, Calcutta.)
17. Aloke Mala, Part II. Gholam Mustafa. (Islamia Library, Calcutta.)
18. Shishu Path, Part II. Abani Bhusan Chakravarty. (A. Chakravarty, Calcutta.)
19. Tarun Path, Part II. Bimal Chandra Ganguli & Mir Fazle Ali. (The Great Eastern Library, Calcutta.)
20. Shiksha Manjari, Part II. Mahitosh Ray Chaudhury. (Kamala Book Depot, Ltd., Calcutta.)
21. Path-Mala, Part II. Bhuban Mohan Bhattacharyya. (Tridibesh Basu, Calcutta.)
22. Sahitya Mala, Part II. Biswapati Chaudhury. (Ganesh Chandra Ghosh, Calcutta.)
23. Path-Guchha, Part II. Namita Devi & Prasanna Kumar Tagore. (Nani Gopal Chakravarty, Calcutta.)
24. Saral Sahitya, Part II. Jogendra Nath Gupta. (Indian Publishing House, Calcutta.)
25. Shaishab Path, Part II. Jyotirmay Ghosh. (Book Corporation, Ltd., Calcutta.)
26. Adarsha Shishu Path, Part III. Jogindra Nath Basu & Ishan Chandra Ghosh. (N. Paul, Calcutta.)

27. Supath, Part II. Prabodh Chandra Sen. (International Book Co., Calcutta.)
28. Prabhati, Part II. Kalidas Roy, Kabishekhar. (School Book Society, Calcutta.)
29. Renukana. Atul Chandra Datta & Srish Chandra Chaudhury. (Surendra Mohan Roy Chaudhury, Calcutta.)
30. Shaishab Shiksha, Part II. Shashi Bhusan Chatterjee & Brahmananda Chatterjee. (S. B. Chatterjee & Sons, Calcutta.)
31. Sahitya Kana, Part II. Jajneswar Paul. (Nur Library, Dacca.)
32. Suniti Shiksha, Part II. Mozammel Haque. (Moslem Publishing House, Calcutta.)
33. Mani Kanchan, Part II. Hariram Dhar. (Author, Dacca.)
34. Shishu Sahitya, Part II. Mahbub Ali Chaudhury. Mosharraf Hossain, Dacca.)
35. Parimal Path, Part II. Pritikana Dattajaya. (Mitra Library, Calcutta.)
36. Sachitra Charu Sahitya, Part III. Mijanur Rahman. (India Library, Dacca.)
37. Mukul. Sachindra Ranjan Das & Mahendra Nath Gupta. (M. C. Sarkar & Sons, Ltd., Calcutta.)
38. Shishu Path, Part II. Naba Krishna Bhattacharyya. (Students' Library, Calcutta.)
39. Manimala, Part II. Bijan Behari Bhattacharyya. (D. N. Mandal & Bros., Calcutta.)
40. Balya Path, Part III. Rai Bahadur Khagendra Nath Mitra. (B. Banerjee & Co., Calcutta.)
41. Dwitiya Path. Jagadish Chandra Chakravarty. (Graduate Book Agency, Dacca.)
42. Tarun Sahitya, Part II. Bejoy Krishna Pal & Saroj Shobhan Banerjee. (B. Sinha & Co., Calcutta.)
43. Prathamik Shiksha Manjari, Part II. Dr. Md. Shahidullah. (Provincial Library, Dacca.)
44. Shishu Sahitya, Part II. Radharaman Chakravarty. (Mohsin & Co., Calcutta.)
45. Nirmalya. Rai Sahib Rajendra Lal Acharyya. (Gakulananda Guha, Dacca.)
46. Prathamik Sahitya, Part II. Jagattaran Das. (Central Book Agency, Calcutta.)
47. Chhotader Sahitya. Bipin Chandra Mukherjee. (The Bharat Publishing House, Calcutta.)
48. Naba Kathamala, Part II. Surendra Nath Bhattacharyya. (Vidyodaya Library, Calcutta.)
49. Sahitya Kalika, Part II. Khan Bahadur Abdur Rahman Khan & Akshay Kumar Roy. (Dacca Library, Dacca.)
50. Sachitra Naba Shishu Path, Part II. Purna Shashi Majumdar. (Amulya Ratan Banerjee, Calcutta.)

51. Sahaj Balya Path, Part II. Manindralal Basu & Nirmal Chandra Sinha. (Macmillan & Co., Ltd., Calcutta.)
52. Saral Sahitya Path, II. Manindra Chandra Mukherjee. (Macmillan & Co., Ltd., Calcutta.)
53. Naba Jnan Mukul, Part II. Ramdayal Chatterjee & Nalini Ranjan Chatterjee. (Nalini Ranjan Chatterjee, Calcutta.)
54. Sachitra Abhinaba Path, Part II. Bibhu Charan Chatterjee. (New Bengal Press, Calcutta.)
55. Charu Path, Jnanada Kishore Chaudhury. (Shishutosh Dhar, Dacca.)
56. Kalyan Path. Tara Kumar Sen Gupta. (Author, Faridpur.)
57. Komal Katha, Part II. Mahendra Kumar Das. (Naba Kumar Das, Dacca.)
58. Amiya Path, Part II. Mahimamaya Mitra. (Students' Library, Calcutta.)
59. Nutan Sahitya, Part II. Sashanka Shekhar Bagchi & Sufi Hossain Ali. (Syamapada Mitra, Calcutta.)
60. Pathshala Sahitya, Part II. Haranath Ghosh. (Victoria Library, Dacca.)
61. Suniti Sopan, Part II. Ebrahim Khan. (Rashidia Library, Tangail, Mymensingh.)
62. Sahitya Kusum, Part II. Krishnadhan De. (Ghosh & Co., Calcutta.)
63. Shishu Sahitya, Part II. Mah-fuzar Rahman Khan. (North Bengal Publishing House, Calcutta.)
64. Saral Sahitya Path, Part II. Bhagabat Kumar Shastri. (K. D. Dutt, Calcutta.)
65. Shishutosh, Part II. Sarat Kumar Roy. (J. N. Roy, Calcutta.)
66. Path-Mala, Part II. Charu Chandra Banerjee. (Minerva Library, Dacca.)
67. Nutan Path, Part II. Jogindranath Sarcar. (City Book Society, Calcutta.)
68. Path Kusum, Part III. Sarojranjan Banerjee. (Macmillan & Co., Ltd., Calcutta.)

READING—HINDI.

(For schools in which Hindi is taught.)

1. Hindusthani Reader, Part II. (Macmillan & Co., Ltd., Calcutta.)
2. Hindi Bodh, Part II. Padamlal Pannalal Bakshi. (Indian Press, Ltd., Allahabad.)
3. Nabin Hindi Reader, Part II. Tajeswar Datta Jauhari. Calcutta Pustak Bhandar, Calcutta.)

READING—NEPALI.

(For schools in which Nepali is taught.)

Nepali Sahitya, Part II. Parash Mani Pradhan & Shesh Mani Pradhan. (Macmillan & Co., Ltd., Calcutta.)

READING—TAMIL.

(For schools in which Tamil is taught.)

South Indian Tamil Reader, Part III. Dewan Bahadur S. Bavanandam Pillai. (Macmillan & Co., Ltd., Calcutta.)

READING—BENGALI.

(Class III.)

1. Mohan Path, Part III. Manoj Basu. (Biswanath Das, Ahiritola, Calcutta.)
2. Supath, Part III. Prabodh Chandra Sen. (Kamala Book Depôt, Ltd., Calcutta.)
3. Niti Sudha, Part IV. Upendra Nath Das. (S. C. Ghosh, Calcutta.)
4. Sahitya Mala, Part III. Biswapati Chaudhury. (Ganesh Chandra Ghosh, Calcutta.)
5. Bodh Bikash, Part III. Nalin Chandra Mukherjee. (Author, Naihati, 24-Parganas.)
6. Pathapunja. Syamapada Chakravarty. (Ghosh & Co., Calcutta.)
7. Sushiksha, Part IV. Rai Sahib Akshay Kumar Datta Gupta, Kabiratna. (Brindaban Dhar & Sons, Ltd., Calcutta.)
8. Jnan Sandarva. Sarat Kumar Roy. (Ramesh Chandra Chakravarty, Calcutta.)
9. Pathshala Sahitya, Part III. Haranath Ghosh. (Victoria Library, Dacca.)
10. Prathamik Sahitya, Part III. Jagattaran Das. (Central Book Agency, Calcutta.)
11. Suniti Prasanga, Part III. Priyadarshan Haldar. (Prafulla Kumar Bose, Calcutta.)
12. Jnan Sopan. Jogendra Nath Mitra and Prasanta Bhusan Gupta. (New Bengal Press, Calcutta.)
13. Sahitya Parichaya, Part III. Rai Rasamaya Mitra Bahadur & Satya Kinkar Biswas. (S. C. Auddy & Co., Ltd., Calcutta.)
14. Sahitya Kalika, Part III. Khan Bahadur Abdur Rahman Khan & Akshay Kumar Roy. (Dacca Library, Dacca.)
15. Pathamala, Part III. Charu Chandra Banerjee. (Minerva Library, Dacca.)
16. Pathshala Sahitya, Part III. Abdur Rashid. (Kohinoor Library, Dacca.)
17. Bichitra Path, Part III. Md. Habibullah and Begum Shamsun Nahar. (Bulbul Publishing House, Calcutta.)
18. Primary Sahitya, Part III. Khan Bahadur Ahsanullah. (Ahsanullah Book House, Ltd., Calcutta.)
19. Aloke Mala, Part III. Gholam Mustafa. (Islamia Library, Calcutta.)

20. Kishalaya, Part I. Kalidas Roy Kabishekhar. (Upendra Nath Dhar, Calcutta.)
21. Tarun Path, Part III. Bimal Chandra Ganguli & Mir Fazle Ali. (The Great Eastern Library, Calcutta.)
22. Sahitya Kanika, Part III. Nilini Ranjan Chatterjee. (Rakhal Chandra Pan, Calcutta.)
23. Sahitya Sopan, Part IV. Rai Sahib Jagadananda Roy. (Brindaban Dhar & Sons, Ltd., Calcutta.)
24. Mukulika. Asit Mukherjee. (Mitra Library, Calcutta.)
25. Sahitya Mukul, Part III. Abdur Rahim. (Jubilee Library, Dacca.)
26. Sahaj Balya Path, Part III. Manindralal Basu & Nirmal Chandra Sinha. (Macmillan & Co., Ltd., Calcutta.)
27. Nimna Sahitya Sopan, Part III. Hameera Khanam. (Musa Publishing House, Calcutta.)
28. Suniti Shiksha, Part III. Mozammel Haque. (Moslem Publishing House, Calcutta.)
29. Prathamik Bangala Sahitya, Part III. Madhu Sudan Dev. (P. C. Majumdar & Bros., Calcutta.)
30. Saral Sahitya Path, Part III. Bhagabat Kumar Shastri. (B. Banerjee & Co., Calcutta.)
31. Adarsha Path, Part I. Jogindra Nath Sarcar. (City Book Society, Calcutta.)
32. Prathamika, Part III. Jatindra Mohan Bagchi. (Mukundalal Chakravertti, Calcutta.)
33. Saral Sahitya, Part III. Jogendra Nath Gupta. (Indian Publishing House, Calcutta.)
34. Naba Jnan Mukul, Part III. Ramdayal Chatterjee and Prabodh Chandra De. (Nalini Ranjan Chatterjee, Kumud Library, Calcutta.)

READING—HINDI.

(*For schools in which Hindi is taught.*)

1. Hindi Bodh, Part III. Padamlal Pannalal Bakshi. (Indian Press, Ltd., Allahabad.)
2. Nabin Hindi Reader, Part III. Tejeswar Datta Jauhari. (Calcutta Pustak Bhandar, Calcutta.)

READING—NEPALI.

(*For schools in which Nepali is taught.*)

Nepali Sahitya, Part III. Parash Mani Pradhan & Shesh Mani Pradhan. (Macmillan & Co., Ltd., Calcutta.)

READING—TAMIL.

(*For schools in which Tamil is taught.*)

South Indian Tamil Reader, Part IV. Dewan Bahadur Bavanandam Pillai. (Macmillan & Co., Ltd., Calcutta.)

READING—BENGALI.

(Class IV.)

1. Sahitya Kalika, Part IV. Khan Bahadur Abdur Rahman Khan & Akshay Kumar Roy. (Dacca Library, Dacca.)
2. Path Mala, Part IV. Charu Chandra Banerjee. (Minerva Library, Dacca.)
3. Mohan Path, Part IV. Manoj Basu. (Biswanath Das, Ahiritola, Calcutta.)
4. Prathamik-Bangala Sahitya, Part IV. Madhu Sudan Dev. (P. C. Majumdar & Bros., Calcutta.)
5. Niti Sudha, Part V. Upendra Nath Das. (S. C. Ghosh, Calcutta.)
6. Prathamik Sahitya, Part IV. Jagattaran Das. (The Central Book Agency, Calcutta.)
7. Naba Jnan Mukul, Part IV. Ramdayal Chatterjee & Nalini Ranjan Chatterjee. (Kumud Library, Calcutta.)
8. Pathshala Sahitya, Part IV. Abdur Rashid. (Kohinoor Library, Dacca.)
9. Saral Sahitya, Part II. Jatindra Nath Mitra. (S. K. Mitra & Bros., Calcutta.)
10. Sahitya Manjari, Part II. Radha Raman Chakravarty. (Author, Patlapur, Bankura.)
11. Sahitya Parichaya, Part IV. Rai Rasamaya Mitra Bahadur & Satya Kinkar Biswas. (S. C. Auddy & Co., Ltd., Calcutta.)
12. Bichitra Path, Part IV. Md. Habibullah & Begum Shamsun Nahar. (Bulbul Publishing House, Calcutta.)
13. Adarsha Path, Part II. Jogindra Nath Sarkar. (City Book Society, Calcutta.)
14. Sahaj Balya Path, Part IV. Manindralal Basu & Nirmal Chandra Sinha. (Macmillan & Co., Ltd., Calcutta.)
15. Supath, Part IV. Prabodh Chandra Sen. (Kamala Book Depot, Ltd., Calcutta.)
16. Path Kusum, Part V. Saroj Ranjan Banerjee. (Macmillan & Co., Ltd., Calcutta.)
17. Prathamika, Part IV. Jatindra Mohan Bagchi. (Mukundalal Chakravarty, Calcutt.)
18. Nabin Sahitya Path, Part IV. Sarojranjan Banerjee. (B. Banerjee & Co., Calcutta.)
19. Jnananjan. Rai Bahadur Aghorenath Adhikary. (H. Chatterjee & Co., Calcutta.)
20. Suniti Sandarva. Sarat Kumar Roy. (Chuckerbertti, Chatterjee Co., Ltd., Calcutta.)
21. Primary Sahitya, Part IV. Khan Bahadur Ahsanullah. (Ahsanullah Book House, Ltd., Calcutta.)
22. Saral Sahitya, Part IV. Jogendra Nath Gupta. (Indian Publishing House, Calcutta.)

23. Sahitya Sopan, Part V. Rai Sahib Jagadananda Roy. (Brindaban Dhar & Sons., Ltd., Calcutta.)
24. Kishalaya, Part II. Kalidas Roy. (U. N. Dhar & Co., Calcutta.)
25. Sahitya Sudha, Part IV. Khan Bahadur Md. Mobarak Ali. (Mukhdumi Library, Calcutta.)
26. Sahitya Mukul, Part II. Abdul Ali. (Chaudhury Fazlar Rahman, Calcutta.)
27. Prasanga Lahiri, Gurubandhu Bhattacharyya. (Macmillan & Co., Ltd., Calcutta.)
28. Saral Sahitya Path, Part IV. Bhagabat Kumar Shastri. (K. D. Dutt, Calcutta.)

READING—HINDI.

(*For schools in which Hindi is taught.*)

1. Hindusthani Reader, Part IV. (Macmillan & Co., Ltd., Calcutta.)
2. Hindi Bodh, Part IV. Padamlal Pannalal Bakshi. (Indian Press, Ltd., Allahabad.)

READING—NEPALI.

(*For schools in which Nepali is taught.*)

Nepali Sahitya, Part IV. Parash Mani Pradhan & Shesh Mani Pradhan. (Macmillan & Co., Ltd., Calcutta.)

READING—TAMIL.

(*For schools in which Tamil is taught.*)

South Indian Tamil Reader V. Dewan Bahadur Bavanandam Pillai. (Macmillan & Co., Ltd., Calcutta.)

(SUPPLEMENTARY READING BOOKS FOR CLASSES III AND IV.)

BENGALI.

(*For Hindus.*)

1. Galpa Malya. Charu Chandra Banerjee. (Minerva Library, Dacca.)
2. Aryya Katha O Kahini. Satyendra Bhusan Mallik & Bankim Chandra Roy. (Indian Publishing House, Calcutta.)
3. Kathamalika. Kalidas Roy. (School Book Society, Calcutta.)
4. Prachin Katha. Sunirmal Basu. (Nath, Banerjee & Co., Calcutta.)
5. Itihaser Galpa. Dr. Abinash Chandra Das. (Upendra Nath Dhar, Calcutta.)
6. Manimala. Chaudhury Fazlar Rahman. (Tajmahal Library, Calcutta.)

7. Sekaler Katha. Ishan Chandra Ghosh. (H. C. Ghosh, Calcutta.)
8. Aryya Kahini. Rai Sahib Jagadananda Roy. (Brindaban Dhar & Sons, Ltd., Calcutta.)
9. Niti O Kahini. Asamanja Mukherjee. (Ahsanullah Book House, Ltd., Calcutta.)
10. Mahabharater Katha, Paresh Nath Mahalanabis. (Dharani Kanta Guha, Dacca.)
11. Ram Krishna Niti Galpa. Sisir Kumar Mitra. (Sisir Publishing House, Calcutta.)
12. Kathika. Bhababhuti Roy. (Jogendra Publishing House, Calcutta.)

NEPALI.

Nepali Sahitya Kathamala. Parashmani Pradhan & Sheshmani Pradhan. (Macmillan & Co., Ltd., Calcutta.)

TAMIL.

Chandramathi. Kalyansundaram Aiyer. (Macmillan & Co., Ltd., Calcutta.)

(SUPPLEMENTARY READING BOOKS FOR CLASSES III AND IV.)

(*For Muhammadans.*)

1. Hirak Har. Ebrahim Khan & Muhammad Ahsanullah. (Itikatha Book Depôt, Calcutta.)
2. Phul Bagicha. Shamsun Nahar. (Bulbul Publishing House, Calcutta.)
3. Chhotader Galpa. Shaikh Habibar Rahman, Sahityaratna. (Itikatha Book Depôt, Calcutta.)
4. Moslem Nitikatha. A. K. Mohammad Hossain. (Islamia Library, Dacca.)
5. Galpa Manjari. Muhammad Jinnat Ullah. (Tajmahal Library, Calcutta.)
6. Islami Nitikatha. Gholam Mustafa. (Mustafa Anawar, Jessore.)
7. Nitimalika. Nur Ahmad. (The Eastern Agency, Dacca.)
8. Katha O Kahini. Khan Sahib Abdur Rub Chaudhury. (A. Latif Chaudhury, Dacca.)
9. Akhyan Manjari. Jasim Uddin Ahmed. (Empire Library, Dacca.)
10. Niti Kahini Mala. Khan Bahadur Kazi Imdadul Haque. (Macmillan & Co., Ltd., Calcutta.)
11. Katha Manjari. Dr. Md. Shahidullah. (Provincial Library, Dacca.)

(*b*) WRITING—BENGALI.

(*Infant Class and Classes I to III.*)

1. Hater Lekha, Parts 1-7. W. S. Milne. (Longmans, Green & Co., Calcutta.)
2. Adarsha Lipi, Parts I-III. Azizur Rahman Chaudhury. (Kohinoor Library, Dacca.)
3. Lipi Shiksha, Parts I-III. Durgadhan Banerjee. (D. Banerjee, Calcutta.)
4. Adarsha Lipi, Parts I-III. Nirmal Chandra Datta. (Santosh Library, Calcutta.)
5. Lipi Sadhana, Parts I-III. Kalipada Mukherjee. (Vidyodaya Library, Calcutta.)
6. Adarsha Hater Lekha, Parts I-III. Abul Fazl Muhammad. (Islamia Library, Cleutta.)
7. Adrsha Lipi, Parts I-III. Razia Begum. (Firoz Library, Mymensingh.)
8. Adarsha Lipi, Nos. 1-3. Ashutosh Dev. (P. C. Majumdar & Bros., Calcutta.)
9. Adarsha Lipi, Parts I-III. Ashutosh Dhar. (Brindaban Dhar & Sons, Ltd., Calcutta.)
10. Chheleder Hater Lekha, Parts I-III. Narendra Nath Neogi. (Soor & Co., Calcutta.)
11. Lekhar Bai, Parts I-III. Ramesa Chandra Chakravarty. (Chakravarty, Chatterjee & Co., Ltd., Calcutta.)
12. Primary Adarsha Lipi, Parts I-III. Kazi Abdur Rashid. (Provincial Library, Dacca.)
13. Adarsha Hasta Lipi, Parts I-III. Muhammad Azizar Rahman. (Mukhdumi Library, Calcutta.)
14. Adarsha Lekha, Parts I-III. Aparajita Devi. (K. C. Acharyya. Calcutta.)
15. Hastalipi Shiksha, Parts I-III. Baidyanath Chatterjee. (S. B. Chatterjee & Sons., Calcutta.)

(*Infant Class.*)

1. Adarsha Lipi, Part I. Jaheda Khatun. (Sahjahan Library, Dacca.)
2. Adarsha Hater Lekha, Part I. Mossammat Sufia Begum. (The Eastern Agency, Dacca.)
3. Primary Hastalipi, Part I. Mossammat Jennatunnessa Khanam. (Liakat Publishing Co., Dacca.)
4. Lipika, Part I. Priyambada Nag. (Indian Publishing House, Calcutta.)
5. Hater Lekha, Part I. Ardha Chandra Ghosh. (Sarat Chandra Ghosh, Calcutta.)

(*Infant Class and Class I.*)

Lipi, Parts I-II. Jatindra Nath Acharyya. (A. Mitra, Calcutta.)

(Class I.)

1 Adarsha Lekha, Part II. Syam Chandra Datta. (Popular Library, Dacca.)
2. Adarsha Lekha, No. 2. M. Abdul Khaleque. (Kohinoor Library, Chittagong.)
3. Adarsha Lipi, Part II. Ashutosh Chaudhury. (Popular Book Depôt, Chittagong.)

(Classes I to III.)

1. Adarsha Lipi, Parts II--III. Hosne Ara Begum. (Karim Publishing House, Dacca.)
2. Hater Lekhar Adarsha, Parts II-III. Amina Khatun. (India Library, Dacca.)
3. Hasta Lipi, Parts II-III. Nuruddin Ahmed. (Nur Library, Dacca.)
4. Lipi Shiksha, Parts II & III. A. K. Das Gupta. (Das Gupta & Sons, Calcutta.)

(Class IV.)

1. Adarsha Hater Lekha, No. 4. Kalikrishna Sen Gupta. (Macmillan & Co., Ltd., Calcutta.)
2. Lipi Siksha, Part III. Pramatha Nath Ghosh. (Victoria Library, Dacca.)
3. Hater Lekha, Part III. Sukritibala Devi. (Birendra Nath Sinha Chaudhury, Dacca.)

WRITING—HINDI.

(Infant Class and Class I.)

Hindi Lipi, Parts I-II. (Indian Press, Ltd., Allahabad.)

(c) ARITHMETIC—BENGALI.

(Infant Class and Classes I and II.)

1. Prathamik Ganit Shiksha, Part I. S. M. Dewan. (India Library, Dacca.)
2. Prathamik Patiganit, Part I. Bholanath Mukherjee. (U. N. Dhar & Co., Calcutta.)
3. Shishutosh Ganit, Part I. Nagendralal Chaudhury. (Nur Library, Dacca.)
4. Saral Ganit, Part I. Mohammad Abdul Hakim. (Karim Publishing House, Dacca.)
5. Saral Nimna Ganit, Part I. Abdul Hossain. (Modern Library, Dacca.)
4. Adhunik Patiganit, Parts I-II. Saradakanta Ganguli. (Students' Library, Calcutta.)

7. Ganit Sopan, Part I. Jaynul Abedin. (Eastern Library, Dacca.)
8. Saral Shishu Ganit. Abdul Hamid. (Sahjahan Library, Dacca.)
9. Sahaj Prathamik Ganit Shiksha, Part I. Ataul Hakim. (K. D. Dutt, Calcutta.)
10. Prathamik Ganit, Part I. Mohammad Khorshed Ali Khan. (The Great Eastern Library, Dacca.)
11. Primary Ganit, Part I. Ahmad Ullah. (Empire Library, Dacca.)
12. Pratham Ganit Shiksha, Part I. Satkari Chandra Ghosh & Phani Bhusan Ghosh. (Ajit Kumar Ghosh, Calcutta.)
13. Sahaj Patiganit, Part I. Kazi Motahar Hossain. (Itikatha Book Depôt, Calcutta.)
14. Ganit Shiksha, Part I. Badaruddin Ahmad. (Aktarazzaman Khan, Dacca.)
15. Naba Shishu Ganit, Sarada Prasanna Das. (Kanailal Pal, Calcutta.)
16. Shishu Ganit, Part I. Khan Sahib Abdur Rub Chaudhury. (Islamia Library, Dacca.)
17. Shishuranjan Ganit Prasnamala, Parts I-III. Kalipada Basu. (J. K. Bose & T. Basu, Calcutta.)
18. Shishu Patiganit, Part I. Bholanath Saha. (Brindaban Dhar & Sons, Ltd., Calcutta.)
19. Nutan Pranalir Prathamik Ganit. Surendra Nath Das & Dinesh Chandra Majumdar. (Surendra Nath Mukhoti, Faridpur.)
20. Shishu Ganit, Part I. Bhabani Prasad Chakravarty. (Ghosh & Co., Calcutta.)
21. Ganit Prabesh. Abani Bhusan Chatterjee. (Dinataran Mukherjee, Calcutta.)
22. Prathamik Ganit Shiksha, Part I. Jadab Chandra Chakravarty & Atul Chandra Chakravarty. (B. Banerjee & Co., Calcutta.)
23. Ganit Mukul, Part I. Sahayaram Bhattacharyya. (Indian Publishing House, Calcutta.)
24. Saral Ganit, Part I. Kshitinath Ghosh. (Kamala Book Depôt, Ltd., Calcutta.)
25. Prathamik Ganit, Part I. Khan Bahadur Abdur Rahman Khan. (Provincial Library, Dacca.)
26. Ganit Mukul. Debi Bhusan Ghosh. (Benoy Bhusan Mitra, Calcutta.)
27. Saral Shishu Ganit, Part I. Jiban Krishna Sarkar. (Saraswat Library, Calcutta.)
28. Sachitra Ganit Korak, Part I. Gosthabihari Haldar. (Kripasaran Haldar, Calcutta.)
29. Prathamik Ganit Shiksha. Madhusudan Sarkar. (Chakravarty, Chatterjee & Co., Ltd., Calcutta.)
30. Chheleder Ganit. Surendra Mohan Datta. (Longmans, Green & Co., Ltd., Calcutta.)
31. Sachitra Prathamik Patiganit, Part I. Radharaman Chakravarty. (A. C. Samanta, Calcutta.)

32. Prathamik Ganit, Part I. Mahendra Kumar Das. (Author, Dacca.)
33. Prathamik Ganit Sopan, Part I. Mohammad Abdul Hai. (Islamia Library, Dacca.)
34. Ganit Bikash. Radhaballav Goswami and Nirojnath Mukherjee. (M. Mansuruddin Bhuyan, Dacca.)
35. Adarsha Saral Ganit, Part I. M. Abul Kasem. (Mukhdumi Library, Calcutta.)
36. Prathamik Sahaj Ganit, Part I. Khagendra Nath Chakravarty. (B. Banerjee & Co., Calcutta.)
37. Shishu Ganit, Part I. Hashmat Ali Chaudhury. (Dacca Library, Dacca.)
38. Chheleder Ganit. Serajul Islam. (Tajmahal Library, Calcutta.)
39. Shisuder Ganit, Part I. Muhammad Shahabuddin. (Nur Library, Dacca.)
40. Shishu Ganit, Part I. Mono Mohan Ray Chaudhury. (The Central Book Agency, Calcutta.)
41. Nimna Ganit, Part I. Prasanna Narayan Kali. (Nagendra Narayan Kali, Dacca.)
42. Saral Prathamik Ganit, Part I. Taranath De. (Brindaban Dhar & Sons, Ltd., Calcutta.)
43. Nutan Ganit, Parts I-III. Abdus Sadeque. (Abdul Kader, Calcutta.)
44. Nutan Ganit, Part I. Dr. Shashindra Chandra Dhar. (Popular Agency, Calcutta.)
45. Ganit Shiksha, Part I. Ali Akbar Khan. (Bharati Library, Dacca.)
46. Naba Prathamik Ganit, Part I. Panchkari Sarkar. (S. C. Addya & Co., Ltd., Calcutta.)
47. Ganit Siksha. Jagat Mohan Sen. (Jogendra Publishing House, Calcutta.)
48. Saral Ganit Shiksha, Parts I-III. Abdul Majid. (Ripon Library, Dacca.)
49. Prathamik Saral Patiganit, Part I. Abdus Samad. (Minerva Library, Dacca.)
50. Chhotader Ganit, Part I. Abdul Wadud. (Kohinoor Library, Dacca.)

ARITHMETIC—HINDI.

Ankaganit, Part I. Sukhadeb Pandey. (Macmillan & Co., Ltd., Calcutta.)

ARITHMETIC—NEPALI.

Nepali Ankaganit, Part I. K. D. Pradhan & P. M. Pradhan. (Macmillan & Co., Ltd., Calcutta.)

ARITHMETIC—TAMIL.

Number and Space. V. Raghunath Aiyer. (Macmillan & Co., Ltd., Calcutta.)

ARITHMETIC—BENGALI.

(Classes III and IV.)

1. Ganit Prasun. Abani Bhusan Chatterjee. (Dinataran Mukherjee, Calcutta.)
2. Saral Nimna Ganit, Part II. Abul Hossain. (Modern Library, Dacca.)
3. Saral Ganit, Part II. Md. Abdul Hakim. (Karim Publishing House, Dacca.)
4. Saral Shishu Ganit, Part II. Jiban Krishna Sarkar. (Saraswat Library, Calcutta.)
5. Nutan Patiganit. Jnanada Kishore Chaudhury & Ajit Kumar Das Gupta. (Anil Kumar Das Gupta, Calcutta.)
6. Shishuranjan Ganit Prasnamala, Parts IV-V. Kalipada Basu. (J. K. Basu & T. Basu, Calcutta.)
7. Prathamik Ganit, Part II. Mahendra Kumar Das. (Author, Dacca.)
8. Charu Ganit, Part II. Ekramuddin Ahmed. (Nur Library, Bagerhat, Khulna.)
9. Shishutosh Patiganit, Part II. Tara Kumar Sen Gupta. (Author, Faridpur.)
10. Saral Prathamik Patiganit, Parts III-IV. Mohini Mohan Roy. (G. C. Chakravarty, Calcutta.)
11. Saral Ganit Shiksha. Madhusudan Sarkar. (Chakravarty, Chatterjee & Co., Ltd., Calcutta.)
12. Prathamik Ganit Sopan, Part II. Md. Abdul Hai. (Islamia Library, Dacca.)
13. Shishu Ganit, Part II. Mono Mohan Roy Chaudhury. (The Central Book Agency, Calcutta.)
14. Sahaj Ganit Shiksha, Part II. Dr. Sukumar Ranjan Das. (Pramode Nath Sen, Calcutta.)
15. Primary Ganit, Part II. Ahmmad Ullah. (Empire Library, Dacca.)
16. Nutan Patiganit, Part I. Kazi Motahar Hossain. (Itikatha Book Depôt, Calcutta.)
17. Primary School Ganit, Serajul Islam. (Tajmahal Library, Calcutta.)
18. Prathamik Ganit Shiksha, Part II. Jadab Chandra Chakravarty & Atul Chandra Chakravarty. (B. Banerjee & Co., Calcutta.)
19. Saral Ganit, Part II. Kshiti Nath Ghosh. (Kamala Book Depôt, Ltd., Calcutta.)
20. Chhotader Ganit, Part II. Abdul Wadud. (Kohinoor Library, Dacca.)
21. Shishutosh Ganit, Part II. Nagendralal Chaudhury. (Nur Library, Dacca.)
22. Sahaj Prathamik Ganit Shiksha, Part II. Ataul Hakim. (R. Pal, Calcutta.)
23. Prathamik Ganit Bikash, Part II. Manada Charan Gupta. (Subodh Chandra Majumdar, Calcutta.)

24. Primary Ganit. Kazi Fazlul Haque. (The Eastern Agency, Dacca.)
25. Chhotader Ganit Shiksha, Part II. Abdus Samad. (India Library, Dacca.)
26. Shishu Shiksha Patiganit, Parts IV-V. Nirmal Chandra Banerjee. (N. Banerjee, Calcutta.)
27. Saral Prathamik Ganit, Part II. Tara Nath De. (Brindaban Dhar & Sons, Ltd., Calcutta.)
28. Saral Ganit, Part II. Rai Bahadur Aghore Nath Adhikary. (Macmillan & Co., Ltd., Calcutta.)
29. Prathamik Saral Patiganit, Part II. Abdus Samad. (Minerva Library, Dacca.)
30. Shishu Patiganit, Part II. Bholanath Saha. (Birendra Kumar Sinha, Dacca.)
31. Ganit Mukul, Part II. Sahayaram Bhattacharyya. (Indian Publishing House, Calcutta.)
32. Ganit Mukul, Part II. Chinta Haran Roy. (Students' Emporium, Barisal.)
33. Prathamik Shiksha Board Ganit, Part II. Abdul Matin & Ershad Ali Khan. (Liakhat Publishing Co., Dacca.)
34. Nimna Ganit, Part II. Prasanna Narayan Kali. (Nagendra Narayan Kali, Dacca.)
35. Prathamik Patiganit, Part II. Radharaman Chakravarty. (Mohsin & Co., Calcutta.)
36. Saral Ganit Shiksha, Parts IV-V. Abdul Majid. (Sheikh Sahajada, Dacca.)
37. Shishu Ganit, Part II. Bhabani Prasad Chakravarty. (Ghosh & Co., Calcutta.)
38. Adhunik Shishu Ganit, Part II. Sudhansu Mohan Mitra. (B. Banerjee & Co., Calcutta.)
39. Shishu Ganit, Part II. Khan Sahib Abdur Rub Chaudhury. (Islamia Library, Dacca.)
40. Sahaj Ganit Shiksha, Part II. Ansar Ali & Abdul Kader. (Provincial Library, Calcutta.)

ARITHMETIC—HINDI.

The Modern Arithmetic, Book I—Parts I-II. K. C. Bhattacharyya. (The Indian Press, Ltd., Allahabad.)

ARITHMETIC—NEPALI.

1. Naya Shikshabidhi Anusarka Ankaganit. S. C. Basu and K. D. Pradhan. (Macmillan & Co., Ltd., Calcutta.)
2. Saral Nepali Ankaganit, Part II. K. D. Pradhan and P. M. Pradhan. (Macmillan & Co., Ltd., Calcutta.)

(*d*) GEOGRAPHY.

(*Class II.*)

No text-book is required for pupils in this class, and instruction should be oral, and on the following lines:—

The subject should be introduced by conversation about the neighbourhood—its roads, waterways, railways, where these come from, where they go to, and what traffic is seen on them.

The children should be shown how to measure the dimension of the school-room, the house and the grounds, the teacher drawing on the blackboard plans which the children will copy.

The children should be given the idea of direction and the cardinal points of the compass. Ideas of hills, valleys, plains, rivers, lakes, islands, etc., are to be gained from pictures and models to be made in clay or wood.

Children should observe the position of the school village in the thana or the district map and calculate distances; observe the position of the district in the map of the province. Stories should be told about journeys to important places such as Calcutta, Darjeeling, etc.

The following books and maps may be used for the purpose of oral instruction :—

1. Byabaharik Shishu Bhugole. G. Das Gupta. (Brindaban Dhar & Sons, Ltd., Calcutta.)
2. Adarsha Bhougalik Path, Part I. Radhasyam Basu. (B. Banerjee & Co., Calcutta.)
3. Sachitra Naba Bhugole Path. Shashi Bhusan Chatterjee & Baidyanath Chatterjee. (S. B. Chatterjee & Sons, Calcutta.)
4. Prathamik Bhu-bidya, Part I. Nagendra Lal Chaudhury. (Popular Agency, Calcutta.)
5. Prathamik Bhugole Parichaya. Nalin Chandra Mukherjee. (Author, Naihati, 24-Parganas.)
6. Prathamik Bhugole Sopan, Part I. Md. Abdur Rashid & Pitambar Nath. (Empire Library, Dacca.)
7. Primary Bhugole, Part I. Kedar Nath Majumdar & Birendra Kishore Tarafdar. (Popular Library, Dacca.)
8. Sachitra Prathamik Bhugole Shiksha, Part I. Panchakari Sarkar. (B. Banerjee & Co., Calcutta.)
9. Bhugole Sopan, Part I. Abdul Majid. (The Eastern Agency, Dacca.)
10. Bhugole Sopan. Kazi Abdur Rashid. (Provincial Library, Dacca.)
11. Prathamik Bhu-parichaya. Nepal Chandra Ray. (Kalipada Ray, Calcutta.)
12. Prathamik Bhugole. Khagendra Nath Mitra & Dwijendra Nath Dhar. (Radharani Devi, Calcutta.)
13. Chhotader Bhugole Shiksha, Part 1. Abdur Rashid. (Kohinoor Library, Dacca.)
14. Nepali Prathamik Bhugole, Part I. Parasmani Pradhan. (Macmillan & Co., Ltd., Calcutta.) (*For teachers in Class II of Primary Schools in which Nepali is taught.*)
15. Prithibir Manchitra. (Eagle Lithographing Co., Calcutta.)
16. Bangala Prathamik Bhuchitrabali. (Macmillan & Co., Ltd., Calcutta.)

(Classes III and IV.)

1. Naba Bhugole Katha. G. Das Gupta. (Brindaban Dhar & Sons, Ltd., Calcutta.)
2. Prathamik Bhugole. Hashmat Ali Chaudhury. (Dacca Library, Dacca.)
3. Bhugole Katha. Bejoy Sankar Sen Gupta. (Dacca Library, Dacca.)
4. Shishu Bhugole. Kumud Chandra Ray Chaudhury. (Indian Publishing House, Calcutta.)
5. Prathamik Bhugole Sopan, Part II. Md. Abdur Rashid & Pitambar Nath. (Empire Library, Dacca.)
6. Prathamik Shiksha Bhugole. Ramesh Chandra Chakravarty. Chukervartti, Chatterjee & Co., Calcutta.)
7. Chhotader Bhugole. Nanigopal Chaudhury. (Dhirendra Nath Ghosh, Calcutta.)
8. Bhugole Mukul. Satish Chandra Chatterjee. (Kamala Book Depôt, Ltd., Calcutta.)
9. Naba Prathamik Bhugole. Kazi Abdur Rashid. (Provincial Library Dacca.)
10. Prathamik Bhugole Parichaya. Haridas Mukherjee, (Sarbamangala Library, Calcutta.)
11. Chhotader Bhugole Shiksha, Part II. Abdur Rashid. (Kohinoor Library, Dacca.)
12. Chhotader Bhugole Path, Part II. Abdus Samad. (India Library, Dacca.)
13. Prathamik Bhugole Path. Biswanath Chatterjee. (Soor & Co., Calcutta.)
14. Bhugole Bijnan. Pranballav Basak. (Albert Library, Dacca.)
15. Prathamik Bhugole Path. Rajendra Nath Ghosh. (Macmillan & Co., Ltd., Calcutta.)
16. Prathamik Bhugole Shiksha. Abdus Samad. (Minerva Library, Dacca.)
17. Naba Bhugole Shiksha, Parts I-II. Shashi Bhusan Chatterjee & Baidyanath Chatterjee. (S. B. Chatterjee & Sons, Calcutta.)
18. Shishutosh Bhugole, Part II. Nuruddin Ahmed. (Nur Library, Dacca.)
19. Prathamik Bhugole. Phanibhusan Mukherjee & Pashupati Chatterjee. (Nalini Ranjan Chatterjee, Calcutta.)
20. Bhugole Parichaya. Nripendra Nath Sinha. (Gour Mohan De, Calcutta.)
21. Chhotader Bhugole. Nalin Chandra Mukherjee. (Author, Naihati, 24-Parganas.)
22. Prathamik Bhugole. Aswini Kumar Dutta. (Tripura Store, Comilla.)
23. Prathamik Bhugole Path, Nrisingha Prasad Sen. (S. K. Mitra & Bros., Calcutta.)

24. Saral Bhugole Path. Bidhubhusan Das Gupta. (Anil Kumar Das Gupta, Calcutta.)
25. Primary Bhugole Path. Nabi Nowaz Khan Lodi. (Liakat Publishing Co., Dacca.)
26. Shishutosh Bhuparichaya. Kumudbandhu Das. (B. K. Ghosh, Calcutta.)
27. Prathamik Bhugole. Bhimapada Ghosh. (Sen Bros. & Co., Calcutta.)
28. Shishu Bhugole. Jogajiban Pal. (Birendra Kumar Sinha, Dacca.)
29. Bhougalik Path. Abdul Majid. (Provincial Library, Dacca.)
30. Shishuranjan Bhugole. Nishi Kanta Sen. (Central Book Agency, Calcutta.)
31. Prathamik Bhu-bidya, Part II. Nagendra Lal Chaudhury. (Popular Agency, Calcutta.)
32. Prathamik Bhugole Path, Part II. Abdul Hakim. (Islamia Library, Dacca.)
33. Chhotader Bhugole, Parts II and III. Kazi Akram Hossain. (Itikatha Book Depôt, Calcutta.)
34. Primary Bhugole Path. Mritunjoy Bhattacharyya. (Nrityalal Seal's Library, Calcutta.)
35. Shishuranjan Bhugole. Tapasbala Devi. (Students' Library, Calcutta.)

BHUGOLE—HINDI.

Hindusthanka Prarambhik Bhugole. (Indian Press, Ltd., Allahabad.)

BHUGOLE—NEPALI.

Nepali Prathamik Bhugole, Part II. Parashmani Pradhan. (Macmillan & Co., Ltd., Calcutta.)

(*e*) HISTORY.

(*Classes III and IV.*)

1. Prathamik Bharat Itihas. Abul Fazle Mohammad Syed. (Islamia Library, Dacca.)
2. Shishuranjan Bharat Itihas. Abdul Karim. (Karim Publishing House, Dacca.)
3. Shishuranjan Bharat Itihas. Dr. Ramesh Chandra Majumdar, & Nalini Kanta Bhattashali. (Nalini Kanta Bhattashali, Dacca.)
4. Shishupathya Bharat Itihas. Tara Kumar Sen Gupta. (Author, Faridpur.)
5. Bharatbarsher Itihas. Jitendranath Banerjee & Hemendra Nath Ghosh. (Macmillan & Co., Ltd., Calcutta.)
6. Shishutosh Bharat Itihas. Miss Joynab Rahim. (The Great Eastern Library, Dacca.)

7. Bharat Katha. Satyananda Roy. (Nalini Ranjan Chatterjee, Calcutta.)
8. Sankshipta Bharat Itihas. Kazi Abdur Rashid. (Provincial Library, Dacca.)
9. Chhotader Itihas. Kazi Akram Hossain. (Itikatha Book Depôt, Calcutta.)
10. Chheleder Itihas. Surendra Mohan Datta. (Longmans Green & Co., Ltd., Calcutta.)
11. Chhotader Itihas. Narayan Chandra Banerjee. (Chackervartti, Chatterjee & Co., Ltd., Calcutta.)
12. Sankshipta Bharat Itihas. Nani Gopal Chaudhury. (Dhirendra Nath Ghosh, Calcutta.)
13. Prathamik Aitihasik Path. Khan Bahadur Kazi Imdadul Haque & Kazi Anwarul Haque. (Kazi Shamsul Haque, Dacca.)
14. Ashubodh Primary Bharat Itihas. Md. Abdur Rashid. (Dacca Library, Dacca.)
15. Chhotader Itihas Shiksha. A. Samad. (India Library, Dacca.)
16. Prathamik Bharatbarsher Itihas. Satyananda Ray & Nihar Ranjan Roy. (Upendra Nath Dhar, Calcutta.)
17. Prathamik Itihas. Mukundalal Chakravarty. (Bimala Charan Banerjee, Calcutta.)
18. Bharater Itihas. Satyendranath Mitra. (P. C. Majumdar & Bros., Calcutta.)
19 Desher Katha. Abdus Sadeque. (Abdul Kader, Dacca.)
20. Shishuder Bharat Itihas. Khan Bahadur Kazi Imdadul Haque, (Provincial Library, Calcutta.)
21. Prathamik Bharatbarsher Itihas. Satish Chandra Mukherjee (New Bengal Press, Calcutta.)
22. Chheleder Bharat. Jogendra Nath Gupta. (Indian Publishing House, Calcutta.)
23. Prathamik Bharat Itihas. Digendralal Sarkar & Anil Chandra Banerjee. (Bina Library, Calcutta.)
24. Bharat Barsher Saral Itihas. Rajani Kanta Gupta. (Mohini Kanta Gupta, Calcutta.)
25. Shishuder Bharatbarsha. A. M. Serajul Haque. (Mukhdumi Library, Calcutta.)
26. Bharat Kahini. Sailesh Chandra Sen. (Ripon Library, Dacca.)
27. Prathamik Bharat Parichaya. Anadi Charan Banerjee. (Ajit Kumar Ghosh, Calcutta.)
28. Bharater Katha. Raghunath Chatterjee. (N. C. Sen, Calcutta.)
29. Shishuder Bharat Itihas. Khan Bahadur Abdur Rahman Khan. (Dacca Library, Dacca.)
30. Shishutosh Bharat Itihas. Nagendralal Chaudhury. (Nur Library, Dacca.)
31. Itihasika. Kalidas Roy Kabishekhar. (Sishir Publishing House, Calcutta.)

32. Bharater Sahaj Shiksha Itihas. Abani Mohan Majumdar & Fariduddin Khan. (Authors, Bangara, Tippera.)
33. Bharatbarsher Sahaj Itihas. Manmatha Mohan Basu. (B. Banerjee & Co., Calcutta.)
34. Bharatbarsher Itihas. Ishan Chandra Ghosh. (Students' Library, Calcutta.)
35. Prathamik Bharatbarsher Itihas. Mahamahopadhyaya Hara Prasad Shastri & Benoytosh Bhattacharyya. (Kamala Book Depôt, Ltd., Calcutta.)
36. Shishuder Bharatbarsha. Rai Jaladhar Sen Bahadur. (B. Banerjee & Co., Calcutta.)

HISTORY HINDI.

Bharatbarsha Ka Itihas. E. Marsden and Ram Chandra Prasad. (Macmillan & Co., Ltd., Calcutta.)

HISTORY—NEPALI.

Bharatbarsha Ka Itihas. E. Marsden and Parashmani Pradhan. (Macmillan & Co., Ltd., Calcutta.)

(*f*) HYGIENE

[HYGIENE (FOR BOYS) OR HYGIENE AND DOMESTIC ECONOMY (FOR GIRLS).]

(*Class I.*)

(To be taught conversationally by means of pictures and, where possible, by models or simple demonstrations about things which boys can see with their own eyes.)

1. Bodily cleanliness.
2. Neatness and cleanliness of clothes, hands, hair, etc.
3. Care of the teeth.
4. Bathing.
5. Proper posture to be adopted in sitting, standing, etc.
6. Need for cleanliness in connection with calls of nature and taking of food.
7. Need for avoiding water which is polluted.
8. Attention of the boys may be directed to flies and mosquitoes, whether in the schools or in their homes.
9. Boys may be warned about bad habits, such as spitting.

N.B.—No text-book is required for pupils in this class.

The following books are recommended for the use of teachers in imparting oral instruction:—

1. Saral Sharir Palan. Dr. Krishnagopal Bhattacharyya & Satipati Bidyabhusan. (Harisadhn Basu, Calcutta.)
2. Shishuder Swasthyaniti. Dr. Satish Chandra De. (B. Banerjii & Co., Calcutta.)

3. Saral Swasthya Raksha. Dr. Bisweswar Chatterjee. (Nanigopal Chatterjee & Co., Calcutta.)
4. Swasthya Suhrid, Part I. Dr. K. P. Roy. (Sudhir Kumar Chakravarty, Calcutta.)
5. Swasthya Bandhab, Part I. Cap. Hirendra Chandra Mallik. (School Book Society, Calcutta.)
6. Primary Swasthya Path. Rai Bahadur Dr. Atul Krishna Ray. (Sarbamangala Library, Calcutta.)
7. Saral Sharir Palan. Kalidhan Banerjee. (K. Banerjee, Calcutta.)
8. Prathamik Swasthya Path. Dr. Upendra Nath Manna. (Lakshmi Publishing House, Calcutta.)
9. Chhotader Swasthya. Dr. Jamini Nath Ghosh. (Santosh Library, Dacca.)
10. Sachitra Swasthya Katha, Part I. Dr. Jagadish Chandra Sen. (Soor & Co., Calcutta.)
11. Sachitra Swasthya Katha, Part I. Dr. Subodh Kumar Sen. The Book Company, Ltd., Calcutta.)
12. Chhotader Swasthyer Katha. Dr. Abhay Kumar Sarkar. (Sarkar & Sons, Faridpur.)
13. Saral Swasthya Raksha. Kazi Abdur Rashid. (Provincial Library, Dacca.)
14. Saral Swasthya Shiksha, Part I. Dr. Azizul Haque, (Empire Library, Dacca.)
15. Prathamik Swasthyaniti. Dr. Mafizuddin Talukdar. (Rashidia Library, Tangail.)
16. Chhotader Dehapalan, Part I. Dr. Md. Fahimuddin & Mir Abdul Gafur. (M. M. Salehin, Mymensingh.)
17. Saral Swasthya Sakha. Girindra Nath Banerjee. (Ajit Kumar Ghosh, Calcutta.)
18. Prathamik Sharir Palan, Part I. Dr. Tarapada Basu & Panchanan Ganguli. (Students' Library, Dacca.)
19. Shishu Swasthya. Dr. Benoy Kumar Roy. (Author, Dacca.)
20. Galpe Swasthya Shiksha. Dr. Amarendra Nath Basu. (Minerva Library, Dacca.)
21. Swasthya Sahaya, Part I. Dr. Md. Bazlur Rahman. (Modern Library, Dacca.)
22. Shishur Swasthya. Dr. Charu Chandra Mukherjee & Dr. Manibhusan Haldar. (B. Banerjee & Co., Calcutta.))
23. Saral Swasthya Shiksha, Part I. Dr. Ansar Ali. (Sahjahan Library, Dacca.)
24. Adarsha Swasthya Path. Dr. Ohiduddin Mahmood & Mrs. Shamsun Nahar. (Bulbul Publishing House, Calcutta.)
25. Sachitra Swasthyer Katha. Dr. Haradhan Basu. (Sarada Sahitya Bhaban, Calcutta.)
26. Swasthyer Katha, Part I. Dr. K. D. Ghosh & Sudhansu Sekhar Gupta. (Indian Press Ltd., Calcutta.)

27. Shishu Swasthya, Part I. Magforuddin Ahmed. (Mukhdumi Library, Calcutta.)
28. Primary Swasthya, Part I. Mohammad Mozaffar Ali. (Ahsanullah Book House, Ltd., Calcutta.)
29. Swasthya Raksha, Part I. Dr. Manoranjan Chakravarty & Ashutosh Dhar, (Brindaban Dhar & Sons, Ltd., Calcutta.)
30. Sharirer Jatna. Dr. Bibhutibhusan Chatterjee. (Vidyodaya Library, Calcutta.)
31. Adarsha Swasthya Path. Rai Sahib Jagadananda Roy. (Brindaban Dhar & Sons, Ltd., Calcutta.)
32. Swasthya Bijnan, Part I. Dr. Ramesh Chandra Bhattacharyya. (Popular Agency, Calcutta.)
33. Saral Swasthya Katha, Part I. Dr. Serajul Islam. (M. K. Das, Dacca.)
34. Saral Palli Swasthya. Dr. Kamakhya Charan Banerjee. (Narayan Chandra Banerjee, Calcutta.)

HYGIENE—CLASS II.

1. Swasthyaraksha, Part II. Dr. Manoranjan Chakravarty & Asutosh Dhar. (Brindaban Dhar & Sons, Ltd., Calcutta.)
2. Saral Swasthyabidhi. Dr. Jogendra Nath Maitra. (J. N. Acharyya, Calcutta.)
3. Sachitra Swasthya Katha, Part II. Dr. Subodh Kumar Sen. (The Book Company, Ltd., Calcutta.)
4. Sachitra Saral Swasthya Path, Part I. Dr. Shibamay Mandal. (Nath, Nandi & Co., Calcutta.)
5. Saral Swasthya Path. Dr. Jamini Nath Ghosh. (Santosh Library, Dacca.)
6. Chhotader Swasthya Bijnan, Part I. Dr. Ohiduddin Mahmood & Mrs. Shamsun Nahar Mahmood. (Bulbul Publishing House, Calcutta.)
7. Prathamik Swasthyer Katha. Dr. Niradbaran Mandal. (Bhabani Prasad Chatterjee, Calcutta.)
8. Shishu Swasthyabidhi, Part I. Dr Hari Prasad Chaudhury. (New Bengal Press, Calcutta.)
9. Adarsha Swasthya Shiksha, Part I. Dr. Kalipada Ghosh & Kabiraj Anath Bandhu Das. (P. Basu, Calcutta.)
10. Chhotader Swasthya, Part I. Khan Mohammad Mainuddin & Dr. Golam Majed Chaudhury. (Students' Library, Calcutta.)
11. Saral Swasthya Path, Part II. Dr. Habibar Rahman & Khan Mohammad Mainuddin. (The Great Eastern Library, Calcutta.)
12. Saral Swasthya Shiksha, Part I. Dr. Jiauddin Ahmed. (Karim Publishing House, Dacca.)
13. Swasthya Bijnan, Part I. Ambika Charan Datta & Kshitinath Ghosh. (Kamala Book Depôt, Ltd., Calcutta.)
14. Prathamik Swasthyaniti, Part I. Dr. Kumud Sankar Roy & Dr. Surendra Nath Sen. (Macmillan & Co., Ltd., Calcutta.)

15. Palli Swasthya, Part I. Dr. Kamakhya Charan Banerjee. (Narayan Chandra Banerjee, Calcutta.)
16. Saral Swasthya Shiksha, Part II. Dr. Ansar Ali. (Sahjahan Library, Dacca.)
17. Swasthya Bandhab, Part II. Captain Hirendra Chandra Mallik. (School Book Society, Calcutta.)
18. Chhotader Swasthya Path, Part II. Dr. Amir Hossain. (Kohinoor Library, Dacca.)
19. Nutan Swasthya Bijnan, Part I. Dr. Abhay Kumar Sarkar. (Sarkar & Sons, Faridpur.)
20. Chhotader Swasthyer Upaya, Part I. Dr. Abdul Aziz. (India Library, Dacca.)
21. Swasthya Sopan. Dr. Jyotirmay Banerjee. (Indian Publishing House, Calcutta.)
22. Shishu Swasthya, Part II. Magforuddin Ahmed. (Mukhdumi Library, Calcutta.)
23. Swasthya Bijnan, Part I. Dr. Upendra Nath Manna. (Lakshmi Publishing House, Calcutta.)
24. Prathamik Swasther Katha, Part I. Dr. Satish Chandra Chatterjee & Nalini Ranjan Chatterjee. (Ramdulal Chatterjee, Calcutta.)
25. Saral Swasthya Raksha. Dr. Chunilal Mukherjee. (U. N. Dhar & Co., Calcutta.)
26. Prathamik Swasthya Path, Part I. Dr. L. M. Biswas. (C. C. Guha, Dacca.)
27. Swasthya Suhrid, Part II. Dr. K. P. Roy. (Sudhir Kumar Chakravarty, Calcutta.)
28. Primary Swasthya O Garhasthya Bidhan. Rai Bahadur Sarat Chandra Brahmachary. (Students' Library, Calcutta.)
29. Sharir Palan, Part I. Saiyad Abul Hashem. (Shaikh Maniruddin & Co., Calcutta.)
30. Sharil Palan. Abdul Mannan. (A. Rahim, Dacca.)
31. Saral Swasthya Katha. Rai Bahadur Dr. Atul Krishna Roy. (Sarba-Mangala Library, Calcutta.)
32. Prathamik Sharir Palan, Part II. Dr. Tarapada Basu & Panchanan Ganguli. (Students' Library, Dacca.)
33. Adhunik Swasthya Katha. Dr. Abani Mohan Das. (N. C. Nandi, Dacca.)
34. Chhelemeyeder Sharir Raksha. Anukul Chandra Shastri. (Gupta & Sons, Dacca.)
35. Swasthyakahini, Part I. Girish Chandra Basu & Capt. Sudhir Kumar Basu. (Ghosh & Co., Calcutta.)
36. Saral Swasthya Katha, Part I. Dr. Abinash Chandra Ghosh & Dr. N. C. Guha. (Hindusthan Library, Dacca.)
37. Swasther Katha. Dr. Narayan Chandra Banerjee. (H. Chatterjee & Co., Calcutta.)
38. Swasthya Raksha. Dr. Benoy Kumar Roy. (Author, Dacca.)
39. Chhotader Dehapalan, Part II. Dr. Jaynal Abedin & Mir Abdul Gafur. (M. M. Salehin, Mymensingh.)

HYGIENE—HINDI.

Saral Swasthya Katha, Part I. Dr. Jyotirmay Banerjee. (Indian Publishing House, Calcutta.)

HYGIENE—NEPALI.

Swasthya Shiksha. Sheshmani Pradhan. (Macmillan & Co., Ltd., Calcutta.)

HYGIENE—(CLASS III AND IV.)

(For boys.)

1. Swasthya Sahachar. Rai Bahadur Dr. Atul Krishna Ray. (Sarbamangala Library, Calcutta.)
2. Sachitra Swasthya Katha, Part III. Dr. Jagadish Chandra Sen. (Soor & Co., Calcutta.)
3. Chhotader Swasthya, Part II. Khan Mohammad Mainuddin & Dr. Golam Majed Chaudhury. (Students' Library, Calcutta.)
4. Swasthya Bijnan, Part II. Ambika Charan Datta & Kshitinath Ghosh. (Kamala Book Depôt, Ltd., Calcutta.)
5. Nutan Swasthya Bijnan, Part II. Dr. Abhoy Kumar Sarkar. (Sarkar & Sons, Faridpur.)
6. Adarsha Swasthya Shiksha, Part II. Dr. Kalipada Ghosh & Kabiraj Anath Bandhu Das. (P. Bose, Calcutta.)
7. Balakder Swasthya Raksha. Anukul Chandra Shastri. (Gupta & Sons, Dacca.)
8. Swasthyer Katha, Part II. Surendra Chandra Chakravarty. (Chackervertti, Chatterjee & Co., Ltd., Calcutta.)
9. Primary Swasthya Bijnan, Part II. Rai Bahadur Dr. Jaharlal Das & Rai Bahadur Sarat Chandra Brahmachary. (Students' Library, Calcutta.)
10. Swasthya Path, Part II. Bisweswar Chatterjee. (Nanigopal Chatterjee & Co., Calcutta.)
11. Chhotader Swasthya Bijnan, Part II. Dr. Ohiduddin Mahmood & Mrs. Shamsun Nahar Mahmood. (Bulbul Publishing House, Calcutta.)
12. Maktaber Swasthya Katha. Dr. Mafizuddin Talukdar. (Provincial Library, Dacca.)
13. Chhotader Swasthyer Upaya, Part II. Dr. Abdul Aziz. (India Library, Dacca.)
14. Chhotader Swasthya Shiksha, Part III. Dr. Saifuddin Ahmed. (Islamia Library, Calcutta.)
15. Swasthya Raksha, Part III. Dr. Monoranjan Chakravarti & Asutosh Dhar. (Brindaban Dhar & Sons, Ltd., Calcutta.)
16. Swasthya Raksha Bidhi, Part II. Dr. Jaynal Abedin & Abdul Majid. (The Eastern Agency, Dacca.)

17. Prathamik Swasthyaniti, Part II. Dr. Kumud Sankar Roy & Dr. Surendra Nath Sen. (Macmillan & Co., Ltd., Calcutta.)
18. Prathamik Swasthya Raksha. Dr. Chunilal Mukherjee. (U. N. Dhar & Co., Calcutta.)
19. Sachitra Swasthya Katha, Parts III-IV. Dr. Subodh Kumar Sen. (The Book Company, Ltd., Calcutta.)
20. Swasthya Kahini, Part II. Girish Chandra Basu & Capt. Sudhir Kumar Basu. (Ghosh & Co., Calcutta.)
21. Saral Swasthya Katha, Part III. Dr. Abul Khair Mohammad Siddiq. (M. K. Das, Dacca.)
22. Chhotader Swasthya Katha, Part II. Kazi Abdur Rashid. (Provincial Library, Dacca.)
23. Saral Swasthya Path, Part III. Dr. Habibar Rahman & Khan Mohammad Mainuddin. (The Great Eastern Library, Calcutta.)
24. Saral Swasthya Path. Dr. Maniklal Mukherjee. (Nrityalal Seal's Library, Calcutta.)
25. Shishu Swasthya Bidhi, Part II. Dr. Hari Prasad Chaudhury. (New Bengal Press, Calcutta.)
26. Sharir Palan, Part II. Saiyed Abul Hashem. (Shaikh Maniruddin & Co., Calcutta.)
27. Chheleder Swasthya. Dr. Benoy Kumar Roy. (Author, Dacca.)
28. Saral Swasthyaniti, Part II. Dr. Birendra Mohan Guha. (Manimohan Basu, Calcutta.)
29. Palli Swasthya, Part II. Dr. Kamakhya Charan Banerjee. (Narayan Chandra Banerjee, Calcutta.)
30. Saral Swasthya Katha. Dr. Jyotirmay Banerjee. (Indian Publishing House, Calcutta.)

HYGIENE—HINDI.

Saral Swasthya Katha, Part II. Dr. Jyotirmay Banerjee. (Indian Publishing House, Calcutta.)

HYGIENE—NEPALI.

Swasthya Shiksha and Garhasthyabidhi. Dr. Charles Bank & Dr. Madan Thapa. (Macmillan & Co., Ltd., Calcutta.)

HYGIENE (FOR GIRLS.)

(Classes III-IV.)

1. Swasther Katha, Part II. Surendra Chandra Chakravarti. (Chuckervertti, Chatterjee & Co., Ltd., Calcutta.)
2. Sachitra Swathya Katha O Garhasthya Bijnan. Dr. Subodh Kumar Sen, & Nila Sen. (The Book Company, Ltd., Calcutta.)
3. Meyeder Swasthya. Dr. Benoy Kumar Roy. (Author, Dacca.)
4. Meyeder Swasthya Katha. Rai Bahadur Dr. Atul Krishna Roy. (N. C. Majumdar, Calcutta.)

5. Balikadiger Sharir Palan, Part I. Dr. Bisweswar Chatterjee. (Nanigopal Chatterjee & Co., Calcutta.)
6. Shishu Swasthyaniti, Parts II & III. Capt. P. C. Chaudhury & G. Das Gupta. (Brindaban Dhar & Sons, Ltd., Calcutta.)
7. Swasthya O Grihasthali. Dr. Kalipada Ghosh & Kabiraj Anath Bandhu Das. (P. Bose, Calcutta.)
8. Balikader Swasthya. Dr. Chunilal Mukherjee. (U. N. Dhar & Co., Calcutta.)
9. Meyeder Swasthya Bijnan. Dr. Abhoy Kumar Sarkar. (Sarkar & Sons, Faridpur.)
10. Swasthya O Garhasthyabidhan. Dr. Joytirmay Banerjee. (Indian Publishing House, Calcutta.)
11. Saral Swasthya Raksha. Dr. Hari Prasad Chaudhury. (New Bengal Press, Calcutta.)
12. Balikader Swasthya Raksha. Anukul Chandra Shastri. (Gupta & Sons, Dacca.)
13. Swasthya Katha, Part II. Dr. Indra Narayan Mukherjee. (Nalini Ranjan Chatterjee, Calcutta.)
14. Swasthya Bijnan. Ambika Charan Datta & Kshitinath Ghosh. (Kamala Book Depôt, Ltd., Calcutta.)
15. Shishu Swasthya, Part III. Dr. Magforuddin Ahmed. (Mukhdumi Library, Calcutta.)

(*g*) OBSERVATION LESSONS (FOR BOYS).

(*Infant Class.*)

Observation lessons.—To be begun by conversation lessons on the things in the school such as benches, desks, stools; children measuring the benches, desks, etc., collecting leaves, flowers and fruits from plants and trees growing in the locality and comparing them as to shape colour, smell, number, etc. Additional observation lessons should be given in correlation with other class subjects.

(*Class I.*)

Observation lessons.—Collection and observation of plants such as may be available in the locality, comparing the different parts of each root, stem, leaves, bark, flowers and fruits with those of another. Collecting crop plants growing in the season. Conversation about the food materials obtained from each. The organs of our body and their uses; children measuring and comparing the respective lengths of their arms, legs, fingers and their height. The teacher testing their eyesight, power of hearing.

(*Class II.*)

Observation lessons.—Growth of plants to be observed by growing any kind of pulse and paddy in pots or in small plots. To observe the roots and seed leaves and mark the difference. Experiments to show the effect of light and moisture on growth. Collecting other plants having roots and seed leaves like those grown. Collecting and

observing plants having creeping or climbing stems. Plants growing in water, plants producing no flowers. Observing leaf buds and flower buds and parts of a flower.

(*Class III.*)

Nature study based on school gardening. [*Recommended for rural schools (optional).*]—Laying out a garden, a plot of 4 to 6 square cubits, for each scholar or if the compound is not spacious enough, a common plot for all, for purposes of experiment. Seed testing—sowing 50 or 100 seeds of each of several kinds of plants, paddy, pluses, jute, mustard, according to the time of the year in each plot or separate parts of the common plot. Each scholar to keep a diary in which to note down the date of sowing, the time taken for germination, the percentage of germination, the rate of growth after germination. In each stage of growth the scholars will pull up a specimen and observe the roots, their uses and growth; the stems and leaves and their uses and structure; the flowers—their parts and uses, the methods of fertilization, the fruits and seeds. All these to be noted in the diary. To observe the kinds of soil—clayey, sandy, loamy; the power of each to absorb and retain moisture. Plant food in the soil. The effect of manures, showing the effect of differnt manures as cowdung, oilcake, ashes and nitrate of soda on the growth of plants, of phosphates, of fruits, etc. The plots should be drawn to scale and all results recorded in the note-book.

(*Class IV.*)

Nautre study based on school gardening (*optional*).—Boys may work in pairs, one of Class III and another of Class IV if single plots are available, otherwise all on a common plot, one being set apart for boys of Class III for experiments only and another for those of Class IV. Plans of work to be prepared in September every year; the plots to be sown with patricular seeds should be set out to scale in the note-book; plan should include also indoor work, such as raising early seedlings of onions, cauliflowers, cabbages in plots or boxes. Following operations to be explained:—Digging—its effect, purpose; to sow at depths suitable to various seeds; to prepare trenches—manuring effect and purpose; plant, food, seeding crops to be shown—(1) jute, *aus* paddy, (3) maize, (4) *aman* paddy, (5) pulses, (6) mustard, (7) potato, (8) gram, also vegetables—brinjal, radish, turnip cauliflower, onion, chilli, flowers grown on borders of each plot—arrangements should be made to produce a continuous supply of vegetables throughout the year. Lessons on rotation, on insect pests and insecticides. Rcords to be kept of the quantity of seed used and of the produce.

N.B.—No text-books are required for the use of pupils in the above classes. The following books may be used by teachers for the purpose of oral instruction:—

(*Infant Class and Class I.*)

1. Prathmik Paryyabekshan Shiksha, Part I. Dr. Subodh Kumar Majumdar. (Subodh Chandra Majumdar, Calcutta.)
2. Prakriti Paryyabekshan, Parts I-II. Hemendra Chandra Mukherjee. (The Central Book Agency, Calcutta.)

3. Prathamik Prakriti Parichaya, Part I. Haridas Mukherjee. (Sarbamangala Library, Calcutta.)
4. Sachitra Paryyabekshan Path, Part I. Surendra Nath Banerjee. (Soor & Co., Calcutta.)
5. Sachitra Paryyabekashan Path, Part I. Mahimaranjan Mukherjee. (Sarbamangala Library, Calcutta.)
6. Prakriti Parichaya, Parts I-II. G Das Gupta. (Brindaban Dhar & Sons, Ltd., Calcutta.)
7. Chhotader Prakriti Parichaya, Part I. Girija Prasanna Majumdar. (Bharat Publishing House, Calcutta.)
8. Prathamik Paryyabekshan Path, Part I. M. A. Razzaq. (Mukhdumi Library, Calcutta.)
9. Paryyabekshan Path, Part I. Md. Abid Ali. (Ahsanullah Book House, Ltd., Calcutta.)
10. Prathamik Paryyabekshan Shiksha, Part I. Satyaranjan Sarkar. (Subhash Library, Calcutta.)

(Infant Class and Classes I and II.)

1. Paryyabekshan Pranali, Parts I-III. Hemendra Kumar Bhattacharyya. (Brindaban Dhar & Sons, Ltd., Calcutta.)
2. Prathamik Paryyabekshan Path, Part I. Jatindra Nath Mitra. (Tajmahal Publishing House, Dacca.)
3. Paryyabekshan Sahaya. Kazi Motahar Hossain. (Aktarazzaman Khan, Dacca.)
4. Prakriti Paryyabekshan, Part I. Rajkumar Sen & Phanibhusan Datta. (B. Banerjee & Co., Calcutta.)
5. Prathamik Paryyabekshan Path. Nagendralal Chaudhury. (Priyadarshan Datta, Dacca.)
6. Prakritir Katha, Part I. Hariram Dhar. (Popular Library, Dacca.)

(Class II.)

1. Prathamik Paryyabekshan Shiksha, Part II. Dr. Subodh Kumar Majumdar. (Subodh Chandra Majumdar, Calcutta.)
2. Paryyabekshan Path, Part II. Mohammad Abid Ali. (Ahsanullah Book House, Ltd., Calcutta.)
3. Prathamik Prakriti Parichaya, Part II. Haridas Mukherjee. (Sarbamangala Library, Calcutta.)
4. Prakriti Paryyabekshan, Part III. Hemendra Chandra Mukharjee. (The Central Book Agency, Calcutta.)
5. Prathamik Paryyabekshan Path, Part II. M. A. Razzaq. (Mukhdumi Library, Calcutta.)

(Classes II and III.)

Prakriti Parichaya, Parts III-IV. G. Das Gupta. (Brindaban Dhar & Sons, Ltd., Calcutta.)

(Classes III and IV).

1. Prathamik Prakriti Parichaya. Dr. Subodh Kumar Majumdar. (Sarbamangala Library, Calcutta.)
2. Prathamik Paryyabekshan Path, Part II. Jatindra Nath Mitra. (Tajmahal Publishing House, Dacca.)
3. Prakriti Paryyabekshan, Part II. Raj Kumar Sen and Phani Bhusan Datta. (B. Banerjee & Co., Calcutta.)
4. Prathamik Paryyabekshan Path, Part II. Nagendralal Chaudhury. (Popular Agency, Calcutta.)

(Classes I to IV.)

Adarsha Maktab Primary Bastupath. Abdul Latif (Islamia Library, Calcutta.)

(*h*) PHYSICAL TRAINING (FOR BOYS) OR NEEDLEWORK (FOR GIRLS).

(1) PHYSICAL TRAINING FOR BOYS' SCHOOLS.

[(a) *Infant Class, Class I and Class II.*]

Simple games, game-like exercises in which general physical activity is developed. Games should be imitative and imaginative.

[(*b*) *Class III and Class IV.*]

General activity exercises of a game-like character. Exercises for all parts of the body taught by commands. Games of an active character (running, chasing, catching, etc.). Simple contests in running, jumping and throwing objects.

N. B.—No text-book is required for pupils in these classes.

The following books are recommended for the use of teachers in imparting oral instructions:—

1. Daihik Shiksha, Part I. Panchanan Gangopadhyaya. (Santosh Library, Dacca.) Price not to exceed annas 8.
2. Balakdēr Khela, Parts I-II. Subodh Chandra Sen. (Brindaban Dhar & Sons, Ltd., Calcutta.) Price not to exceed annas 8.

N. B.—Dr. Gray's Drill Book, issued by this department, is hereby cancelled.

(2) SYLLABUS IN NEEDLEWORK FOR GIRLS' SCHOOLS.

(Infant Class.)

Needle drill and hemming. Top sewing and running.

(Class I.)

Backstitching, filling and patchwork, making pillow-cases and bags.

(Class II.)

Cross-stitch, making a chemise (gathers can be, but need not be used for the band.) Plain knitting with two needles.

(Class III.)

Cutting out and making a plain petticoat. Making button-holes. Marking on cloth in vernacular characters. Knitting plain and purl with two needles.

(Class IV.)

Cutting out and making a jacket, button-holes and gathering pieces of cloth and putting it into a band. Darning and herring-bonning, knitting of plain socks for babies.

Remarks.—No text-books to be used.

II.—Optional Subjects.

(*a*) DRAWING (OPTIONAL).

(Infant Class.)

Mass drawing using fruits and vegetables as models. No outline is required, but the object is to be built up as it were from the centre outwards. The crayon or chalk or charcoal should be held in the centre and the object produced by rubbing from right to left until the correct shape and mass are represented.

(Class I.)

Drawing with chalk (preferably coloured) on slates and later on scraps of paper, leaves, fruits and thin simple sprays and thence sprays with flowers—various kinds of leaves and fruits may be used.

Remarks.—Children should be provided with pencil and pieces of paper having a good surface. Drawing books only for advanced pupils. India-rubber to be kept by the teacher and its use allowed only at his discretion.

(Class II.)

Harder models to be given, fruits, etc., being arranged in a variety of groups. Memory drawing of things seen in and out of school. Outline drawing to begin.

Remarks.—No text-book.

(Class III.)

Memory drawing continued. Beginning the elements of perspective. Drawing "construction lines." Drawing a circle or elipse viewed from different points. Drawing a box seen from the following points:—

The box placed—

(1) below the eye,

(2) above the eye,

(3) at the left of the eye,
(4) at the right of the eye,
(5) below and at the left,
(6) above and at the left,
(7) below and at the right,
(8) above and at the right,
(9) directly in front of the eye.

Subjects of greater difficulty by grouping solid figures. Shading.

Remarks.—No text-book to be used.

(*Class IV.*)

Drawing in perspective to be continued. Groups of solid figures. Attention to light and shade to be expressed by pencil work. Brass utensils, drinking vessels, boxes, bottles, etc., may be used as models.

Complex objects, difficult grouping of single objects, complicated arrangements of flowers and the study of trees should be taken up as more advanced work. Memory drawing, drawing from imagination and the study of movement should next be attempted.

Remarks.—No text-book.

N.B.—No text-books are required for the use of pupils in the above classes. The following books may be used by *teachers* for the purpose of oral instruction :—

(*Infant Class and Classes I to IV.*)

1. Prathamik Ankan Shiksha, Parts I-V. Nripendra Nath Majumdar. (Sarbamangala Library, Calcutta.)
2. Prathamik Chitra Shiksha, Parts I-V. (Brindaban Dhar & Sons, Ltd., Calcutta.)
3. Adarsha Chitra Shiksha, Parts I-V. Abdur Rashid. (Provincial Library, Dacca.)
4. Primary Drawing Book, Parts I-V. A. F. Mohammad. (Islamia Library, Calcutta.)
5. Chitra Lekha, Primary, Nos. I-V. Sailendra Nath De. (Indian Publishing House, Calcutta.)

(*Infant Class and Classes I to III.*)

1. Primary Chitra Rekha, Parts I-IV. Syam Chandra Datta. (Santosh Library, Dacca.)
2. Prathamik Chitra Lekha, Parts I-IV. Pitambar Nath. (Noor Library, Dacca.)

(*Infant Class and Classes I and II.*)

1. Primary Chitra, Parts I-III. Anukul Chandra Dhar. (Author, Calcutta.)
2. Chhotader Chhabi Anka, Parts I-III. Purna Chandra Chakravarty. (School Library, Calcutta.)

(Infant Class and Class I.)

1. Primary Chitra Shiksha, Parts I-II. Bhupendra Nath Roy. (Sarbamangala Library, Calcutta.)
2. Adarsha Sahaj Drawing Shiksha. Nagendra Nath Majumdar. (Students' Library, Calcutta.)
3. Shishur Chitra Shiksha, Parts I-II. Subarna Kumar Banerjee. (S. Banerjee, Calcutta.)
4. Chitra Darpan, Parts I-II. Kazi Waizuddin Ahmed. (Provincial Library, Calcutta.)
5. Prathamik Chitra Rekha, Part I. Sushama Devi. (H. C. Majumdar, Calcutta.)

(Class II.)

Primary Chitrankan Pustak, Part II. M. Mansuruddin Bhuiyan. (Liakat Publishing Co., Dacca.)

(Classes II to IV.)

Primary Chitra Shiksha, Parts II-IV. Rasaraj Sarkar. (Madhusudan Sarkar, Calcutta.)

(Classes II and III).

Chitran, Parts I-II. Samar De. (Tara Chand Das, Calcutta.)

(Classes III and IV.)

Prathamik Chitra Rekha, Parts III-IV. Sushama Devi. (H. C. Majumdar, Calcutta.)

(Class IV.)

Chitra Darpan, Part V. Kazi Waizuddin Ahmed. (Provincial Library Dacca.)

(*b*) MANUAL WORKS (OPTIONAL).

(Class I.)

(*a*) Clay modelling—simple household utensils, pottery, etc., modelling in connection with the beginnings of Geography. The children should model from picture or from models made by the teacher.

(*b*) Stick-laying with the use of seeds to shapes shown on a wall chart. The following shapes may be used :—

An umbrella, a house, a fence and gate, a door, a window, a house with fence and gate, a tree (with half-stick), a verandah of a house, a man, a cart, a cow. Build up a hut from several new elements, children working together.

Remarks.—Wall charts and models.

(Class II.)

Tear out of paper, according to picture chart, a wall, a house, a man, a tree, a boat, a large pucca house, a cow, a hen, a vulture, a

horse, a bullock-cart, a bridge, a man with a lathi, a man with a bundle on his head. Multiply them by folding the paper and so build up a street, a railway engine, carriage, etc. Each model may be improved with pencil or colours. Make a book (using a pin for stitching), an envelope. The teacher may teach any paper-folding which he knows.

Remarks.—Wall charts and models.

(*Class III.*)

Claywork combined with sticks. The models suggested in the first and second years should be made with clay and sticks combined and any other materials available. All materials may be used, e.g., straw for roof, leaves for plants, paper for man's clothes, scissors and knives may be used.

Remarks.—Wall charts and models.

(*Class IV.*)

1. Construct a cardboard ruler graduated in inches, half the ruler in half-inches, quarter of the ruler in quarter-inches, a sixth in eighths and over in tenths.

2. Construct a cardboard scale showing 1 inch to a foot up to 3 feet. Measure and draw plans of furniture to scale.

3. Draw circles and simple geometrical figures (*e.g.*, triangles, square, oblong) to scale, cut out in cardboard. Save these models for future experiments.

4. Construct a cardboard 45° set square—copy direct from model—make another half-size. Construct a cardboard 30° and 60° set square. Refer to angles 1, 2 and 3 and make them at each corner.

5. Draw and cut out triangles using set-squares.

6. Construct and cut out a protractor.

7. Graduate and cut out a thermometer scale—copy from actual object.

8. Draw and cut out the following flat objects:—A box with sides flattened out, a clock, a house with sides flattened out, a door, a window, a fence (made of pieces of paper cut to scale), a gate, a bridge, with pillars, with arches, a picture frame, etc.

9. Models constructed to a scale but not in flat, an envelope (in paper), a tray, a picture frame, a box, a table, a stool, a house, a house with windows and doors. Add a fence to it. A weather-cock (working model), a kite, a wind-mill, a fan. Embellish and finish all these models in ways which may suggest themselves to an artistic temperament, but on no account must the finishing process be utilised to cover up inaccurate work.

10. Simple models in paper and cardboard illustrating history, literature and descriptive geography.

Remarks.—A text-book or wall charts showing the dimensioned drawing of the models.

Wall Chart for Manual Work, Parts I-III. (S. B. Chatterjee and Sons, Calcutta.) Recommended for use as models in classes by teachers.

(c) Science (Optional).

(Recommended for Urban Schools.)

[*Classes III and IV (for boys).*]

1. Chhelelder Bijnan, Parts I and II. Tribhanga Murari Mandal. (Sen Bros., Co., Calcutta.)
2. Primary Bijnan. Ganapati Banerjee. (Ahsanullah Book House, Ltd., Calcutta.)
3. Ibtedai Science, Part I (Urdu). Khan Sahib A. M. Md. Asad. (M. Kamaluddin, Calcutta.)

(d) English (Optional).

Class III.

1. Modern English Primer, Egerton Smith. (The Book Company, Ltd. Calcutta.)
2. The Oxford English Course, Indian Edition, Primer. Lawrence Faucett. (Oxford University Press, Calcutta.)
3. Jubillee Edition First Book of Reading (English Bengali). Rajkrishna Datta. (Datta Nephew & Co., Calcutta.)
4. Macmillan's King Readers The King Primer—Anglo-Bengali. E. Marsden. (Macmillan & Co., Ltd., Calcutta.)
5. A New Primer of English for Bengali Speaking Children with Speed Exercises. (Macmillan & Co., Ltd., Calcutta.)
6. New Code Readers, Primer. B. C. Chatterjee. (B. B. Mukherjee, Wellington Street, Calcutta.)
7. The Primary English Readers, Primer. A. Razzaq. (Mir Golam Mahiuddin, Dacca.)
8. Modern Primer. Khan Bahadur Ahsanullah. (Ahsanullah Book House, Ltd., Calcutta.)
9. An English Primer. W. C. Wordsworth. (The Book Company Ltd., Calcutta.)
10. The Modern English Readers, Primer. J. Lahiri. (The Central Book Agency, Calcutta.)
11. Primary Readers, Primer. M. Fazlul Hasne. (Karim Publishing House, Dacca.)
12. The Rose Primer. Ebrahim Khan and S. Azimuddin. (K. H. Din, Calcutta.)
13. The Modern Primer. Nilkrishna Mitra. (N. C. Sen, Calcutta.)
14. Jubilee Primer. J. L. Banerjee. (Chuckervertty, Chatterjee & Co., Ltd., Calcutta.)
15. Simple Readers, Primer. P. K. Guha. (Brindaban Dhar & Sons, Ltd., Calcutta.)
16. The Pearl Primer. N. C. Chakravarty. (The Graduate Book Agency, Dacca.)

17. New School Primer. Jogendra Nath Mitra and S. C. Mukherjee. (New Bengal Press, Calcutta.)
18. New Bengal Primer. P. Gupta. (New Bengal Press, Calcutta.)
19. New Sunshine Readers, Primer. Lotika Ghosh. (Indian Publishing House, Calcutta.)
20. Kohinoor Readers, Primer. Altaf Hossain. (Kohinoor Library, Dacca.)
21. Standard English Readers, Primer. A. Rub Chaudhury. (Albert Library, Dacca.)
22. Gem Primer. Sailendra Nath Sircar. (U. N. Dhar & Co., Calcutta.)
23. The Lotus Primer. J. Ghoshal and H. Sen. (Harish Chandra Sen, Dacca.)
24. English Primer for Bengali Boys. Kazi Abdur Rashid. (The Provincial Library, Dacca.)
25. Clarendon Readers, Primer. (Oxford University Press, Calcutta.)
26. New Primer. Mahendra Kumar Doss. (B. K. Datta, Dacca.)
27. Simple English Primer. Bhabatosh Sen. (P. C. Sinha & Sons, Dacca.)
28. New Indian Readers, Primer. S. N. Roy & T. J. Collins. (Albert Library, Dacca.)
29. Jubilee English Primer. A. K. Mohammad Hossain. (The Islamia Library, Dacca.)
30. New Children's Primer. A. Mowat and D. L. Sircar. (Bina Library, Calcutta.)
31. Rainbow Readers, Primer. (Anglo-Hindi) T. S. Upot. (Indian Press Ltd., Allahabad.)
32. Macmillan's King Readers—The King Primer. (Anglo-Nepali). E. Marsden. (Macmillan & Co., Ltd., Calcutta.)
33. Macmillan's King Readers—The King Primer—(Anglo-Tamil). E. Marsden. (Macmillan & Co., Ltd., Calcutta.)
34. First Reader, (Anglo-Tamil). M. S. Hari Hara Aiyar. (Macmillan & Co., Ltd., Calcutta.)

(Class IV.)

1. Clarendon Readers, Book I. (Oxford University, Press, Calcutta.)
2. The Primary English Readers, Reader I. A. Razzaq. (Mir Golam Mahiuddin, Dacca.)
3. The Modern Reader. Nil Krishna Mitra. (N. C. Sen, Calcutta.)
4. The Children's Reader. D. L. Sircar. (Bina Library, Calcutta.)
5. The Rose Reader, Book I. Ebrahim Khan and Azimuddin Ahmed. (K. H. Din, Calcutta.)
6. New Code Readers, First Book. B. C. Chatterjee. (B. B. Mukherjee, Wellington Street, Calcutta.)

7. New Sunshine Readers, No. I. Latika Ghosh. (The Indian Publishing House, Calcutta.)
8. Modern English Reader, Book I. Egerton Smith. (The Book Company, Ltd., Calcutta.)
9. First Lessons in English, Reader I. T. J. Collins. (Students' Library, Dacca.)
10. The Golden Readers, Book I. Sudhansu Mohan Mitra. (Minerva Library, Dacca.)
11. Royal Jubilee Readers. M. K. Ganguli. (Author, Barisal.)
12. New Bengal Reader. P. Gupta. (New Bengal Press, Calcutta.)
13. The Oxford English Course, Indian Edition, Book I, Lawrence Faucett. (Oxford University Press, Calcutta.)
14. Ruby Readers, Book I. Mahmood Hasan. (The Provincial Library, Dacca.)
15. Maktab English Reader. Syed Badruddoza. (Mukhdumi Library, Calcutta.)
16. Macmillan's King Readers, Reader I. (Anglo-Bengali.) E. Marsden. (Macmillan & Co., Ltd., Calcutta.)
17. Jubilee Reader. J. L. Banerjee. (Chuckervertty, Chatterjee & Co., Ltd., Calcutta.)
18. Macmillan's King Readers, Reader I. (Anglo-Tamil.) E. Marsden. (Macmillan & Co., Ltd., Calcutta.)
19. Macmillan's King Readers, Reader I. (Anglo-Napali) E. Marsden. (Macmillan & Co., Ltd., Calcutta.)

WRITING.

(Classes III and IV.)

1. Saraswati Copy Slips, Parts I-II. (Macmillan & Co., Ltd., Calcutta.)
2. Ideal Copy Book, Parts I-II. Arun Chandra Dev. (N. C. Mazumdar, Calcutta.)
3. Primary Copy Books, Nos. 1-2. R. C. Chakravarty. (Chuckervertty, Chatterjee & Co., Ltd., Calcutta.)
4. Jubilee English Copy Book. Parts I-II. Abul Fazl Mohammad. (Islamia Library, Dacca.)
5. Model Copy Books, Nos. 1-2. Ashtosh Dhar. (Brindaban Dhar & Sons, Ltd., Calcutta.)
6. New Copy Books, Nos. 1-2. G. N. Chatterjee. (A. C. Banerjee, Calcutta.)
7. New English Copy Book, Parts I-II. Kazi Abdur Rashid (The Provincial Library, Dacca.)
8. New English Copy Book, Parts I-II. Shyam Chandra Datta. (Popular Library, Dacca.)
9. English Copy Slip, Parts I-II. Priyambada Nag. (Indian Publishing House, Calcutta.)

10. Ideal Copy Book, Parts I-II. A. K. Das Gupta. (Das Gupta & Sons, Calcutta.)
11. Semi Upright English Copy Books, Nos. I-II. A. M. Anisur Rahman. (Mukhdumi Library, Calcutta.)
12. Modern Copy Books, Nos. 1-2. S. K. Chakravarty. (K. C. Acharyya, Calcutta.)
13. The Ideal English Copy Book, Parts I-II. Hem Chandra Banerjee. (Minerva Library, Dacca.)
14. Primary Copy Books, Nos. 1-2. P. N. Chatterjee. (S. B. Chatterjee & Sons, Calcutta.)

(*e*) ZAMINDARY AND MAHAJANI ACCOUNTS (OPTIONAL).

(*Class IV.*)

1. Zamindary O Mahajani Shiksha. Abdul Hakim. (India Library, Dacca.)
2. Saral Zamindary O Mahajani Karyya Shiksha. Bejoy Kumar Ghosh. (Tara Library, Calcutta.)
3. Saral Zamindary O Mahajani Hisab. Bholanath Ghosh. (Indian Publishing House, Calcutta.)
4. Prathamik Zamindary O Mahajani Shiksha. Abdul Hakim (Islamia Library, Dacca.)
5. Zamindary O Mahajani Shiksha. Khagendra Nath Ghosh. (B. K. Das, Calcutta.)
6. Zamindary O Mahajani Hisab. Anukul Chandra Dhar. (Author, Calcutta.)
7. Sahaj Zamindary O Mahajani Shiksha. Madhusudan Dev. (P. C. Mazumdar & Bros., Calcutta.)
8. Zamindary O Mahajani Shiksha. Md. Yakub Hussain. (Ashanullah Book House, Ltd., Calcutta.)
9. Adarsha Zamindary O Mahajani Shiksha. Kazi Abdur Rashid & Nirode Chandra Sen. (Provincial Library, Dacca.)
10. Primary Mahajani Zamindary Shiksha, Part I. (Hindi) Sreedatta Sinha & Indradev Sinha. (Rameswar Pandey, Calcutta.)
11. Bahi Khata (Hindi). (Indian Press Ltd., Allahabad.)

EDUCATION DEPARTMENT, BENGAL.

NOTIFICATION.

No. 7 T. B.—29th August 1936.—In accordance with the Government (Education Department) notification No. 3730 Edn., dated the 8th December 1924, the following list of text-books approved by this department for use in all Classes of Moslem Primary Schools or Maktabs in the Presidency of Bengal is published for general information. These books are approved for a period of four years from January 1937.

The list of text-books published with this office notification No. 3T.B., dated the 16th June 1930, is hereby cancelled.

The syllabuses for Infant Class, Class I and II in the Revised Curriculum for Primary Schools (and Maktabs), now in force in both parts of this Presidency, shall be adopted, respectively, in the Infant Class, Class I and Class II of Middle Schools and the corresponding Classes of High Schools for both boys and girls. Text-books approved by this department for Infant Class, Class I and II of Primary Schools (and Maktabs) will be applicable to the corresponding Classes of Secondary Schools.

District Boards and District School Boards are requested to choose books from the following list for use in Maktabs under their control. In making this choice, it is hoped that care will be taken to ensure that undue patronage of either individual authors or publishing houses is avoided. Inspecting Officers should not themselves recommend books directly to Primary Schools.

J. M. BOTTOMLEY,
Director of Public Instruction, Bengal.

INTRODUCTORY NOTES.

1. Any vernacular, *e.g.*, Urdu, may be substituted for Bengali where the controlling authorities of the school consider that circumstances justify it.

2. The compulsory subjects in all schools (maktabs) will be the following:—

(*a*) Reading.
(*b*) Writing.
(*c*) Arithmetic.
(*d*) Geography.
(*e*) History.

(*f*) Koran, Ritual* of Islam and Urdu.

(*g*) Observation Lessons for Boys, Needlework or Domestic Economy for Girls.

The Maktab (Primary) Final Examination will be held at the end of Class IV and the subjects of examination will be the first six subjects. The Preliminary Maktab (Primary) Scholarship (L.P.) Examination will be held at the end of Class II and the subjects of examination will be the first four and the sixth.

3. In addition, for the Maktab (Primary) Final Examination two of the following optional subjects should be taken:—

(*a*) Hygiene (for Boys) or Hygiene and Domestic Economy (for Girls),

(*b*) Manual Work,

(*c*) English, and

(*d*) Zamindary and Mahajani Accounts,

and for the preliminary Maktab (Primary) Scholarship Examination only one of the optional subjects, viz., Manual Work, should be taken.

4. The course will be completed in five years and pupils at the completion of the course will take the Maktab (Primary) Final Examination.

5. A boy from a Maktab intending to enter a High or a Middle English School should leave at the end of Class II. A boy may also enter a High or Middle English School at the end of Class IV, provided he has taken English as an optional subject in Classes III and IV.

6. In selecting text-books for Maktabs preference should be given to those by Moslem authors.

---

*The Ritual should include a general knowledge of moral precepts from the Koran and from the Sayings of the Prophet.

N.B.—(*i*) Prior to the publication of a new edition, all additions, alterations or omissions in the text of a sanctioned book must receive the sanction of the Committee. Any deviation from these instructions will render a book liable to immediate removal from the approved list of text-books.

(*ii*) No name except that of the author and publisher should be allowed on cover or title page (*i.e.*, no name of editor, reviser, or writer of foreword or preface should be allowed).

(*iii*) Mat (*i.e.*, dull) and not shining paper should be used.

(*iv*) Misleading statements on the cover or title page should be avoided. It should be clearly mentioned whether the book is approved as a text-book, a supplementary reader or a prize and library book.

(*v*) Any deterioration in paper, printing, binding or illustrations of an approved book will render it liable to immediate withdrawal from the list.

(*vi*) Prices of text-books for Moslem primary schools are to be calculated at the following rates:—

(*a*) One anna and six pies for each 32 pages of printed matter *plus* a concession of 40 per cent.

This rate will be applicable to Bengali readers and text-books on History, Science, Hygiene, Arithmetic and Zamindary and Mahajani Accounts.

(*b*) Two annas for each 32 pages of printed matter *plus* a concession of 40 per cent.

This rate will be applicable to English readers and text-books on Geography and Urdu.

(*c*) One anna and six pies for a Bengali copy book.

(*d*) Two annas and three pies for an English copy book.

TEXT-BOOKS.

I.—Compulsory Subjects.

(*a*) READING—BENGALI.

(*Infant Class.*)

1. Maktab Barna Parichaya, Parts I and II. Mohammad Sanaullah. (Maktab Publishing House, Calcutta.)
2. Maktab Barna Shiksha. Syed Osman Ali. (Maktab Publishing House, Calcutta.)
3. Maktab Barna Parichaya. Kazi Akram Hossain. (Itikatha Book Depot, Calcutta.)
4. Maktab Balya Path. Nurul Hossain. (Md. Golam Hossain, Calcutta.)
5. Maktaber Banan Shiksha. Asraf Ali. (Provincial Library, Dacca.)
6. Maktab Balya Shiksha. Hosne Ara Begum. (Karim Publishing House, Dacca.)
7. Maktab Barna Shiksha. Abdul Moadud. (Ahsanullah Book House, Ltd., Calcutta.)
8. Maktab Barna Parichaya. Mozammel Haque. (Nurul Haque, Dacca.)
9. Maktab Barna Mukul. Jasimuddin Ahmed. (Empire Library, Dacca.)
10. Maktaber Barna Shiksha. Mosammat Rokeya Khatun. (Mosammat Rokeya Khatun, Bagura.)
11. Maktab Shishu Path. Abdus Samad and Abdur Rahman. (Mir Golam Mahiuddin, Dacca.)
12. Maktab Shishu Sreni. Jasimuddin. (Author, Dacca.)
13. Maktab Shishu Path. Khan Bahadur Kazi Imdadul Haque. (Students' Library, Calcutta.)
14. Saral Maktab Path, Part I. Khan Bahadur Kazi Imdadul Haque and Kazi Anwarul Haque. (Kazi Shamsul Haque, Dacca.)
15. Maktab Barna Parichaya. Chaudhury Mosharraf Hossain. (Tajmahal Library, Calcutta.)
16. Maktab Madrasah Balya Path. Amina Khatun. (India Library, Dacca.)
17. Muslim Shishu Shiksha. Abul Hossain. (Modern Library, Dacca.)
18. Maktab Shishu Shiksha. Abdul Majid. (Empire Library, Dacca.)
19. Maktab Balya Shiksha. Atahar Uddin Ahmed. (The Great Eastern Library, Dacca.)
20. Muslim Primary Shishu Path. Jobeda Khatun. (Tajmahal Publishing House, Dacca.)

21. Maktab Shishu Path. Mah-Fuzar Rahman Khan. (North Bengal Publishing House, Calcutta.)
22. Moslem Shishu Sahitya. Part I. Khan Bahadur Tasadduq Ahmed. (Students' Library, Dacca.)
23. Maktab Balya Shiksha. Golam Rahman. (Islamia Store, Chandpur.)
24. Muslim Shishu Sahitya. Fariduddin Khan. (Author, Bangara High School, Tippera.)
25. Maktab Barna Path. Khan Bahadur Daliluddin Ahmed. (Victoria Library, Dacca.)
26. Maktab Balya Shiksha. Abdur Rahman Khan. (Shaikh Raiyazuddin Ahmed, Dacca.)
27. Maktaber Akshar Parichaya. Munsi Tafsiruddin Ahmed. (Mohammadia Library, Calcutta.)
28. Maktaber Barna Shiksha. Mozammel Haque. (Moslem Publishing House, Calcutta.)
29. Maktab Path. Meherunnisa Khatun. (Noor Library, Dacca.)
30. Maktab Balya Shiksha. Kazi Abdul Hamid. (Provincial Library, Dacca.)
31. Adarsha Balya Shiksha. Anjumunnessa Begum. (Md. Abdur Rashid, Noakhali.)
32. Maktab Barna Parichaya. Shamsun Nahar. (Bulbul Publishing House, Calcutta.)
33. Balika Nur or Balika Shiksha. Mosammat Jamila Khatun. (Liakat Publishing Co., Dacca.)
34. Maktaber Pratham Shiksha. Haresuddin Ahmed. (Golam Rasul, Calcutta.)
35. Maktab Madrasah Balya Shiksha. Md. Abdul Hai. (Islamia Library, Dacca.)

READING—URDU.

1. Urdu Primer. Mohamed Shafiq Athar. (H. M. Said and Sons, Calcutta.)
2. Islamiā Urdu Qaida. Md. Taher Rezwi. (Islamia Library, Calcutta.)
3. Shigufa-i-Urdu Qaida. Syed Hamid Ali. (Indian Press, Ltd., Allahabad.)
4. Taj Urdu Primer I. Syed Serajul Hossain. (Macmillan & Co., Ltd., Calcutta.)
5. Urdu Primer I. Abdul Hamid and Lala Mool Raj. (Macmillan & Co., Ltd., Calcutta.)
6. Alif-Ba-E-Habib Urdu. Md. Habibullah. (Macmillan & Co., Ltd., Calcutta.)
7. Urdu Primer. Shams-ul-Ulama Amin Abbasi. (Ahsanullah Book House; Ltd., Calcutta.)
8. Maktab Urdu Primer. A. T. Md. Obaidullah. (Islamia Library, Dacca.)

READING—BENGALI.

(Class I.)

1. Maktaber Bangala Shiksha, Part I. Mozammel Haque. (Moslem Publishing House, Calcutta.)
2. Moslem Sahitya Kalika, Part I. Syed Uddin Khan. (Prativa Library, Dacca.)
3. Tajmahal Path, Part I. Begum Shamsun Nahar, and Muhammad Habibullah. (Bulbul Publishing House, Calcutta.)
4. Maktab Sahitya Parichaya, Part I. Mozammel Haque. (Nurul Haque, Dacca.)
5. Maktab Sahitya Kusum, Part I. Khan Bahadur A. A. Abdul Baset. (Karim Publishing House, Dacca.)
6. Moslem Sahitya, Part I. Jaynul Abedin. (Eastern Library, Dacca.)
7. Maktab Kana, Part I. Abdur Rashid. (Nur Library, Dacca.)
8. Naya Parah, Part I. Abul Mansur Ahmed. (Firoz Library, Mymensingh.)
9. Maktab Shishu Sahitya, Part I. Mah-fuzar Rahman Khan. (North Bengal Publishing House, Calcutta.)
10. Maktab Sahitya, Part I. Abul Mottaleb Ahmad Hossain. (Shaikh Gaizuddin, Calcutta.)
11. Muslim Sahitya, Part I. Abdur Razzaq Akhunji. (Kohinoor Library, Dacca.)
12. Maktab Sahitya Mala, Part I. Mohammad Jonab Ali (Abdus Sobhan, Dacca.)
13. Maktab Mukul, Part I. Abdus Samad & Abdur Rahman. (Mir Golam Mahiuddin, Dacca.)
14. Adarsha Maktab Sahitya, Part I. Hares Uddin Ahmed. (Golam Rasul, Calcutta.)
15. Maktab Nitihar, Part I. Jasimuddin Ahmed. (Empire Library, Dacca.)
16. Maktab Sahitya, Part I. Hashmat Ali Chaudhury. (Dacca Library, Dacca.)
17. Maktab Madrasah Sahitya, Part I. Ataharuddin Ahmed and A. M. Taheruddin. (The Great Eastern Library, Calcutta.)
18. Maktab Sahitya. Kazi Nazrul Islam. (Khandaker Abdul Jobbar, Calcutta.)
19. Maktab Katha, Part I. Hossain Ali. (Tajmahal Publishing House, Dacca.)
20. Maktab Sahitya Shiksha, Part I. Kazi Abdur Rashid. (Provincial Library, Calcutta.)
21. Maktab Madrasah Reader, Part I. Khan Bahadur Kazi Imdadul Haque. (Provincial Library, Dacca.)
22. Moslem Sahitya Path, Part I. Mohammad Abdur Rashid. (Obaidul Haque, Dacca.)
23. Maktab Sahitya Kalika. Nuruddin Ahmed. (Nur Library, Dacca.)

24. Maktab Madrasah Sahitya, Part I. Amina Khatun. (India Library, Dacca.)
25. Adarsha Maktab Sahitya, Part I. Mahammad Meshbauddin. (Badaruddin Ahmed, Calcutta.)
26. Muslim Path Manjari, Part I. Dr. Md. Shahidullah. (Islamia Library, Dacca.)
27. Maktab Sahitya, Part I. Kazi Abdul Wadud. (Eastern Agency, Dacca.)
28. Muslim Sahitya, Part I. Abdur Rahim. (Jubilee Library, Dacca.)
29. Sahaj Maktab Sahitya, Part I. Dr. Md. Enamul Haque. (B. Banerjee & Co., Calcutta.)
30. Muslim Sahitya Shiksha, Part I. A. K. M. Delware Hossain. (India Library, Dacca.)
31. Muslim Pathshala Sahitya, Part I. Nargis Asar Khanam. (Nargis Niketan, Dacca.)
32. Muslim Sahitya Shiksha, Part I. Abul Hossain. (Modern Library, Dacca.)
33. Muslim Sahitya Sopan, Part I. Ahsanullah. (Rashidia Library, Tangail.)
34. Maktab Path. Abdul Malek. (School Library, Dacca.)
35. Maktab Madrasah Sahitya Kanika. Ebrahim Khan. (Adarsha Library, Mymensingh.)
36. Saral Maktab Path, Part II. Khan Bahadur Kazi Imdadul Haque and Kazi Anwarul Haque. (Kazi Shamsul Haque, Dacca.)
37. Maktab Madrasah Sahitya, Part I. Syed Mozaffar Hossain. (Mohamadia Library, Calcutta.)
38. Adarsha Muslem Sahitya, Part I. Nabi Nowaz Khan Lodi. (Liakat Publishing Co., Dacca.)
39. Moslem Path, Part I. Khan Sahib Abdur Rub Chaudhury. (Islamia Library, Dacca.)
40. Moslem Shishu Sahitya, Part II. Khan Bahadur Tasadduq Ahmed. (Students' Library, Dacca.)
41. Moslem Nitikatha. Khan Bahadur Daliluddin Ahmed. (Victoria Library, Dacca.)
42. Muslim Primary Sahitya, Part I. Jabeda Khatun. (Tajmahal Publishing House, Dacca.)

READING—URDU.

1. Islamia Urdu Ki Paheli Ketab. Md. Taher Rezwi. (Islamia Library, Dacca.)
2. Shigufa-i-Urdu, Part I. Syed Hamid Ali. (Indian Press, Ltd., Allahabad.)
3. Taj Urdu Primer, Part II. Syed Serajul Hossain. (Macmillan & Co., Ltd., Calcutta.)

4. Maktab Madrasah Urdu Reader, Part I. Khan Bahadur Maulana Md. Musa and Shams-ul-ulama Maulana Velayet Hosain. (Provincial Library, Dacca.)
5. Urdu Reader. Md. Obaidullah. (Islamia Library, Dacca.)
6. Maktab Ki Paheli Ketab. Md. Obaidullah. (Islamia Library, Dacca.)
7. Maktab Madrasah Urdu Reader, Part II. Khan Bahadur Maulana Md. Musa and Shams-ul-ulama Maulana Md. Velayet Hosain. (Provincial Library, Dacca.)

READING—BENGALI.

(Class II.)

1. Maktab Kana, Part II. Abdur Rashid. (Nur Library, Dacca.)
2. Maktab Path, Part II. Khan Bahadur Kazi Imdadul Haque. (Students' Library, Calcutta.)
3. Muslim Sahitya, Part II. Abdul Razzaq Akhunji. (Kohinoor Library, Dacca.)
4. Muslim Path Manjari, Part II. Dr. Md. Shahidullah. (Islamia Library, Dacca.)
5. Maktab Sahachar, Part II. Mir Fazle Ali. (The Hamidia Library, Barisal.)
6. Muslim Sahitya Shiksha, Part II. A. K. M. Delware Hossain. (India Library, Dacca.)
7. Maktaber Bangala Shiksha, Part II. Mozammel Haque. (Moslem Publishing House, Calcutta.)
8. Tajmahal Path, Part II. Begum Shamsun Nahar and Md. Habibullah. (Bulbul Publishing House, Calcutta.)
9. Maktab Bangala Sahitya, Part II. Abdul Moadud. (Ahsanullah Book House, Ltd., Calcutta.)
10. Maktab Sahitya, Part II. Abul Mottaleb Ahmed Hossain. (Shaikh Gaizuddin, Calcutta.)
11. Maktab Sahitya, Part II. Hashmat Ali Chaudhury. (Dacca Library, Dacca.)
12. Maktab Madrasah Sahitya, Part II. Atahar Uddin Ahmad and A. M. Taheruddin. (The Great Eastern Library, Calcutta.)
13. Adarsha Maktab Sahitya, Part II. Mahamad Mesbahuddin. (Badaruddin Ahmed, Calcutta.)
14. Maktab Sahitya Kusum, Part II. Khan Bahadur A. A. Abdul Baset. (Karim Publishing House, Dacca.)
15. Maktab Sahitya, Part II. Mohammad Sanaullah. (B. Banerjee & Co., Calcutta.)
16. Maktab Nitihar, Part II. Jasimuddin Ahmed. (Empire Library, Dacca.)
17. Muslim Sahitya Sopan, Part II. Ebrahim Khan. (Rashidia Library, Tangail.)
18. Muslim Primary Sahitya, Part II. Jobeda Khatun. (Tajmahal Publishing House, Dacca.)

19. Maktab Shishu Sahitya, Part II. Mah-fuzar Rahman Khan. (North Bengal Publishing House, Calcutta.)
20. Saral Maktab Path, Part III. Khan Bahadur Kazi Imdadul Haque and Kazi Anwarul Haque. (Kazi Shamsul Haque, Dacca.)
21. Muslim Sahitya Path, Part II. Fariduddin Khan. (Author, Bangara High School, Tippera.)
22. Maktab Katha, Part II. Hossain Ali. (Tajmahal Publishing House, Dacca.)
23. Naba Maktab Sahitya, Part II. Dr. Muhammad Enamul Haque. (B. Banerjee & Co., Calcutta.)
24. Moslem Sahitya, Part II. Jaynul Abedin. (Eastern Library, Dacca.)
25. Maktab Madrasah Shiksha, Part II. Khan Bahadur Md. Mobarak Ali. (Mukhdumi Library, Calcutta.)
26. Muslim Shiksha, Part III. Ali Akbar Khan. (Bharati Library, Dacca.)
27. Maktab Mukul, Part II. Abdus Samad and Abdur Rahman. (Mir Golam Mahiuddin, Dacca.)
28. Maktab Madrasah Shiksha. Khan Bahadur Daliluddin Ahmed. (Victoria Library, Dacca.)
29. Maktab Madrasah Reader, Part II. Khan Bahadur Kazi Imdadul Haque. (Provincial Library, Dacca.)
30. Maktab Sahitya Parichaya, Part II. Mozammel Haque. (Nurul Haque, Dacca.)
31. Moslem Shishu Sahitya, Part III. Khan Bahadur Tasadduq Ahmed. (Students' Library, Dacca.)
32. Naya Parah, Part II. Abul Mansur Ahmed. (Firoz Library, Mymensingh.)
33. Moslem Sahitya Path, Part II. Mohammed Abdur Rashid. (Obaidul Haque, Dacca.)
34. Moslem Path, Part II. Khan Sahib Abdur Rub Chaudhury. (Islamia Library, Dacca.)
35. Maktab Sahitya Shiksha, Part II. Kazi Abdur Rashid. (Provincial Library, Calcutta.)
36. Muslim Sahitya Shiksha, Part II. Abul Hossain. (Modern Library, Dacca.)
37. Moslem Sahitya Kalika, Part II. Syed Uddin Khan. (Prativa Library, Dacca.)
38. Muslim Sahitya, Part II. Shamsun Nahar. (Islamia Publishing House, Chandpur.)
39. Maktab Sahitya Sudha, Part II. Abdul Majid. (Shaikh Sahazada Mia, Dacca.)
40. Maktab Mukul, Part II. Abdus Samad and Abdur Rahman. (Mir Golam Mahiuddin, Dacca.)
41. Maktab Madrasah Sahitya, Part II. Amina Khatun. (India Library, Dacca.)
42. Adarsha Moslem Sahitya, Part II. Nabi Nowaz Khan Lodi. (Lakkat Publishing Company, Dacca.)

READING—URDU.

1. Islamia Urdu Ki Dusri Ketab. Md. Taher Rezwi. (Islamia Library, Dacca.)
2. Urdu Ka Qaida. Kazi Md. Assaduzzaman. (Firoz Library, Mymensingh.)
3. Shigufa-i-Urdu, Part II. Syed Hamid Ali. (Indian Press, Ltd., Allahabad.)

READING—BENGALI.

(Class III.)

1. Muslim Path Manjari, Part III. Dr. Md. Shahidullah. (Islamia Library, Dacca.)
2. Muslim Primary Sahitya, Part III. Jobeda Khatun. (Tajmahal Publishing House, Dacca.)
3. Tajmahal Path, Part III. Begum Shamsun Nahar and Muhammad Habibullah (Bulbul Publishing House, Calcutta.)
4. Maktab Madrasah Sahitya, Part III. Ataharuddin Ahmed, and A. M. Taheruddin. (The Great Eastern Library, Calcutta.)
5. Moslem Sahitya Kalika, Part III. Syed Uddin Khan. (Prativa Library, Dacca.)
6. Maktab Sahitya Path, Part III. Abdul Majid. (Empire Library, Dacca.)
7. Moslem Sahitya, Part III. Abdur Razzaq Akhunji. (Kohinoor Library, Dacca.)
8. Maktab Madrasah Shiksha, Part III. Khan Bahadur Md. Mobarak Ali. (Mukhdumi Library, Calcutta.)
9. Maktab Kana, Part III. Abdur Rashid. (Nur Library, Dacca.)
10. Maktab Mukul, Part III. Abdus Samad and Abdur Rahman. (Mir Golam Mahiuddin, Dacca.)
11. Maktab Sahachar, Part III. Mir Fazle Ali. (The Hamidia Library, Barisal.)
12. Moslem Sahitya Path, Part I. A. F. M. Menhajuddin. (Md. Jinnatullah, Calcutta.)
13. Maktab Madrasah Reader, Part III. Khan Bahadur Kazi Imdadul Haque. (Provincial Library, Dacca.)
14. Maktab Madrasah Sahitya Chayan. Dr. Muhammad Enamul Haque. (S. Abdul Ghani Chaudhury, Chittagong.)
15. Moslem Sahitya, Part III. Khan Sahib Abdur Rub Chaudhury. (A. Latif Chaudhury, Dacca.)
16. Naya Parah, Part III. Abul Mansur Ahmed. (Firoz Library, Mymensingh.)
17. Adarsha Moslem Sahitya, Part III. Nabi Nowaz Khan Lodi. (Liakat Publishing Company, Dacca.)

18. Maktab Madrasah Sahitya, Part III. Amina Khatun. (India Library, Dacca.)
19. Muslim Shiksha, Part IV. Ali Akbar Khan. (Bharati Library, Dacca.)
20. Muslim Sahitya Shiksha, Part III. Abul Hossain. (Modern Library, Dacca.)
21. Moslem Path, Part III. Khan Sahib Abdur Rub Chaudhury. (Islamia Library, Dacca.)
22. Maktab Madrasah Path. Khan Bahadur Daliluddin Ahmed. (Victoria Library, Dacca.)
23. Nutan Maktab Sahitya, Part III. Kazi Wazuddin Ahmed. (Provincial Library, Dacca.)
24. Muslim Sahitya Path, Part III. Fariuddin Khan. (Author, Bangara High School, Tipperah.)

READING—URDU.

1. Shigufa-i-Urdu, Part III. Syed Hamid Ali. (Indian Press Ltd., Allahabad.)
2. Guldista-i-Urdu, Part II. Syed Hosain Ali. (Haji Abdul Qayyum, Calcutta.)
3. Guldista-i-Urdu, Part III. Syed Hosain Ali. (Haji Abdul Qayyum, Calcutta.)
4. Islamia Urdu Ki Tesri Ketab. Md. Taher Rezwi. (Islamia Library, Dacca.)

READING—BENGALI.

(Class IV.)

1. Tajmahal Path, Part IV. Begum Shamsun Nahar and Muhammad Habibullah. (Bulbul Publishing House, Calcutta.)
2. Muslim Shiksha, Part V. Ali Akbar Khan. (Bharati Library, Dacca.)
3. Muslim Path Manjari, Part IV. Dr. Md. Shahidullah. (Islamia Library, Dacca.)
4. Moslem Path, Part IV. Khan Sahib Abdur Rub Choudhury. (Islamia Library, Dacca.)
5. Maktab Sahitya Kusum, Part IV. Khan Bahadur A. A. Abdul Baset. (Karim Publishing House, Dacca.)
6. Maktab Madrasah Path. Khan Bahadur Daliluddin Ahmed. (Students' Library, Dacca.)
7. Moslem Sahitya Path, Part II. A. F. M. Menhajuddin. (Mohammad Jinnatullah, Calcutta.)
8. Maktab Kana, Part IV. Abdur Rashid. (Nur Library, Dacca.)
9. Maktab Madrasah Shiksha, Part IV. Khan Bahadur Md. Mobarak Ali. (Mukhdumi Library, Calcutta.)

10. Moslem Sahitya Shiksha, Part IV. Abul Hossain. (Modern Library, Dacca.)
11. Adarsha Muslim Sahitya, Part IV. Khan Bahadur Kazi Zahirul Haque and A. K. Mohammad Rahamat Ali Mir. (Kazi Mahbubal Haque, Dacca.)

READING—URDU.

1. Islamia Urdu Ki Chauthi Ketab. Md. Taher Rezwi. (Islamia Library, Dacca.)
2. Urdu Reader. Mohammad Shafiq Athar. (H. M. Said & Sons, Calcutta.)
3. Aina-i-Adab. Mohammad Shafiq Athar. (H. M. Said & Sons, Calcutta.)
4. Shigufa-i-Urdu, Part IV. Syed Hamid Ali. (Indian Press, Ltd., Allahabad.)

SUPPLEMENTARY READING BOOKS.

(Classes III and IV.)

(For Muhammadans.)

1. Hirak Har. Ebrahim Khan and Muhammad Ahsanullah. (Itikatha Book Depot, Calcutta.)
2. Phul Bagicha. Shamsun Nahar. (Bulbul Publishing House, Calcutta.)
3. Chhotader Galpa. Shaikh Habibar Rahman, Sahityaratna. (Itikatha Book Depot, Calcutta.)
4. Moslem Nitikatha. A. K. Mohammad Hossain. (Islamia Library, Dacca.)
5. Galpa Manjari. Mohammad Jinnatullah. (Tajmahal Library, Calcutta.)
6. Islami Nitikatha. Gholam Mustafa. (Mustafa Anwar, Jessore.)
7. Nitimalika. Nur Ahmed. (The Eastern Agency, Dacca.)
8. Katha O Kahini, Khan Sahib Abdur Rub Chaudhury. (A. Latif Chaudhury, Dacca.)
9. Akhyan Manjari. Jasim Uddin Ahmed. (Empire Library, Dacca.)
10. Niti Kahini Mala. Khan Bahadur Kazi Imdadul Haque. (Macmillan and Co., Ltd., Calcutta.)
11. Katha Manjari. Dr. Md. Shahidullah. (Provincial Library, Dacca.)

STORY READER—URDU.

Hekayat-E-Marghoob. Mohammad Shafiq Athar. (H. M. Said & Sons, Calcutta.)

(For teachers.)

DINIYAT.

(Infant Class and Classes I to IV.)

1. Diniyat Shiksha, Parts I-V. Khan Bahadur Shamsuddin Ahmed. (India Library, Dacca.)
2. Diniyat Shiksha, Part II. Syed Serajul Haque. (Karim Publishing House, Dacca.)
3. Diniyat Shiksha, Parts I-V. Maulana Syed Ahmadullah. (Noor Library, Dacca.)
4. Diniyat Shiksha, Parts I-V. Azhar Ali Khan. (Abdur Rahim Khan, Dacca.)
5. Diniyat Shiksha. M. Kafiluddin Ahmed. (Mukhdumi Library, Calcutta.)
6. Diniyat Shiksha, Parts I-II. Khan Sahib Maulvi Hamidur Rahaman. (Provincial Library, Calcutta.)
7. Shishuder Diniyat, Parts I-V. Nur Ahmad. (Albert Library, Dacca.)
8. Diniyat Shiksha, Parts I-V. Khan Bahadur Kamaruddin Ahmmad. (The Eastern Agency, Dacca.)
9. Diniyat Shiksha, Shamsul-ulama Maulana Abu Nasr Muhammad Wahid. (F. Rubb and Bros., Dacca.)
10. Diniyat Shiksha, Parts I-V. Maulana Muhammad Abdus Sobhan. (Islamia Library, Dacca.)
11. Namaj Shiksha O Masla Shikha. Maulana Md. Abdus Sobhan. (Islamia Library, Dacca.)

(Infant Class and Class I.)

1. Diniyat Shiksha, Parts I&II. Abdus Salam. (School Library, Dacca.)
2. Diniyat Path, Part I. Abul Hussain. (Modern Library, Dacca.)

(Infant Class and Classes I and II.)

1. Islam O Diniyat Shiksha. Abdul Awal. (Tajmahal Publishing House, Dacca.)
2. Diniyat Shiksha, Part I. Abdul Majid. (Provincial Library, Dacca.)
3. Diniyat Shiksha, Part I. Maulana Syed Ahmad Ullah. (Noor Library, Dacca.)
4. Diniyat Shiksha, Parts I-III. Maulana Ahsanullah. (Rashidia Library, Tangail.)
5. Diniyat Shiksha, Parts I-III. Azhar Ali Khan. (Abdur Rahim Khan, Dacca.)
6. Adarsha Diniyat Shiksha, Part I. Md. Abdul Wadud. (Empire Library, Dacca.)

7. Chhotader Diniyat Shiksha, Part I. Shamsul-Ulama Haji Hafiz Muhammad Ishaq and Dr. Md. Shahidullah. (Nural Haque, Dacca.)
8. Diniyat Shiksha, Part I. Syed Serajul Haque. (Karim Publishing House, Dacca.)
9. Diniyat Shiksha, Part I. Jaynul Abedin. (Eastern Library, Dacca.)
10. Diniyat Shiksha, Parts I-III. Mijanur Rahman. (India Library, Dacca.)
11. Diniyat Path, Parts I-III. Shahiduddin Mohammad. (Bulbul Publishing House, Calcutta.)
12. Diniyat Shiksha, Part I. Abdul Majid. (Hindusthan Library, Dacca.)

(Classes I and II.)

1. Namaj Shiksha, or Diniyat Shiksha, Part I. Md. Emdad Ali. (Author, Bhandaria, Barisal.)
2. Diniyat Shiksha, Part I. Kazi Muhammad Assaduzzaman. (Firoz Library, Mymensingh.)

(Classes II to IV.)

1. Diniyat Path, Part II. Abul Hossain. (Modern Library, Dacca.)
2. Diniyat, Part II. Khan Bahadur Ahsanullah. (Ahsanullah Book House, Ltd., Calcutta.)

(Classes III and IV.)

1. Diniyat Shiksha, Part II. Kazi Muhammad Assaduzzaman. (Firoz Library, Mymensingh.)
2. Risala-E-Diniyat. Md. Shafiq Athar. (A. K. Haya, Calcutta.)

WRITING—BENGALI.

(Infant Class and Classes I-III.)

1. Hater Lakha, Parts 1-7. W. S. Milne. (Longmans, Green and Co., Calcutta.)
2. Adarsha Lipi, Parts I-III. Azizur Rahman Chaudhury. (Kohinoor Library, Dacca.)
3. Lipi Shiksha, Parts I-III. Durgadhan Banerjee. (D. Banerjee, Calcutta.)
4. Adarsha Lipi, Parts I-III. Nirmal Chandra Datta. (Santosh Library, Calcutta.)
5. Lipi Sadhana, Parts I-III. Kalipada Mukherjee. (Vidyodaya Library, Calcutta.)

6. Adarsha Hater Lekha, Parts I-III. Abul Fazl Muhammad. (Islamia Library, Calcutta.)
7. Adarsha Lipi, Parts I-III. Razia Begum. (Firoz Library, Mymensingh.)
8. Adarsha Lipi, Nos. 1-3. Asutosh Dev. (P. C. Majumdar and Bros., Calcutta.)
9. Adarsha Lipi, Parts I-III. Asutosh Dhar. (Brindaban Dhar and Sons, Ltd., Calcutta.)
10. Chheleder Hater Lakha, Parts I-III. Narendra Nath Neogi. (Soor & Co., Calcutta.)
11. Lekhar Bai, Parts I-III. Ramesh Chandra Chakravarty. (Chakravarty, Chatterjee and Co., Ltd., Calcutta.)
12. Primary Adarsha Lipi. Parts I-III. Kazi Abdur Rashid. (Provincial Library, Dacca.)
13. Adarsha Hasta Lipi, Parts I-III. Muhammad Azizar Rahman. (Mukhdumi Library, Calcutta.)
14. Adarsha Lekha. Parts I-III. Aparajita Devi. (K. C. Acharyya, Calcutta.)
15. Maktab Madrasah Adarsha Lipi, Parts I-III. Mosammat Saleha Khanam. (The Great Eastern Library, Calcutta.)
16. Hastalipi Shiksha, Parts I-III. Baidyanath Chatterjee. (S. B. Chatterjee and Sons. Calcutta.)

(Infant Class.)

1. Adarsha Lipi, Part I. Jaheda Khatun. (Sahjahan Library, Dacca.)
2. Adarsha Hater Lekha, Part I. Mossammat Sufia Begum. (The Eastern Agency, Dacca.)
3. Primary Hastalipi, Part I. Mossammat Jennatunnessa Khanam. (Liakat Publishing Co., Dacca.)
4. Lipika, Part I. Priyambada Nag. (Indian Publishing House, Calcutta.)
5. Hater Lekha, Part I. Ardha Chandra Ghosh, (Sarat Chandra Ghosh, Calcutta.)

(Infant Class and Class I.)

Lipi, Parts I-II. Jatindra Nath Acharyya. (A. Mitra, Calcutta.)

(Class I.)

1. Adarsha Lakha, Part II. Syam Chandra Datta. (Popular Library, Dacca.)
2. Adarsha Likha, No. 2. M. Abdul Khaleque. (Kohinoor Library, Chittagong.)
3. Adarsha Lipi, Part II. Asutosh Chaudhury. (Popular Book Depot, Chittagong.)

(Classes I-III.)

1. Adarsha Lipi, Parts II-III. Hosne Ara Begum (Karim Publishing House, Dacca.)
2. Hater Lekhar Adarsha, Parts II-III. Amina Khatun. (India Library, Dacca.)
3. Hasta Lipi, Parts II-III. Nuruddin Ahmed. (Nur Library, Dacca.)
4. Lipi Shiksha, Parts II-III. A. K. Das Gupta. (Das Gupta and Sons, Calcutta.)

(Class IV.)

1. Adarsha Hater Lakha, No. 4. Kalikrishna Sen Gupta. (Macmillan and Co., Ltd., Calcutta.)
2. Lipi Shiksha, Part III. Pramatha Nath Ghosh. (Victoria Library, Dacca.)
3. Hater Lekha, Part III. Sukritibala Devi (Birendra Nath Sinha, Choudhury Dacca.)

WRITING—URDU.

(Infant Class.)

1. Saidi Urdu Copy Slip, No. 1. (H. M. Said and Sons, Calcutta.)
2. Urdu Copy Book. M. Md. Nural Huda. (Mukhdumi Library, Calcutta.)
3. Obaidi Urdu Copy Book, Part 1. A. T. Md. Obaidullah. (Islamia Library, Dacca.)

(Class I.)

1. Maktab Madrasah Urdu Copy Book, Part I. Abdus Sobhan. (Empire Library, Dacca.)
2. Jadid Urdu Copy Slip, No. 1. (Indian Press, Ltd., Allahabad.)
3. Obaidi Urdu Copy Book, Part II. A. T. Md. Obaidullah. (Islamia Library, Dacca.)
4. Saidi Urdu Copy Slip, No. 2. (H. M. Said and Sons, Calcutta.)

(Class II.)

1. Maktab Madrasah Urdu Copy Book, Part I. Shamsul-Ulama Maulana Md. Velayet Hossain. (Provincial Library, Dacca.)
2. Obaidi Urdu Copy Book, Part III. A. T. Md. Obaidullah. (Islamia Library, Dacca.)

3. Jadid Urdu Copy Slip, No. 2. (Indian Press, Ltd., Allahabad.)
4. Maktab Madrasah Urdu Copy Book, Part II. Abdus Sobhan. (Empire Library, Dacca.)
5. Saidi Urdu Copy Slip, No. 3. (H. M. Said and Sons, Calcutta.)

(Class III.)

1. Maktab Madrasah Urdu Copy Book, Part II. (Shamsul-Ulama Maulana Md. Velayet Hossain. (Provincial Library, Dacca.)
2. Jadid Urdu Copy Slip, No. 3. (Indian Press, Ltd., Allahabad.)

(Class IV.)

Maktab Madrasah Urdu Copy Book, Part III. (Shamsul-Ulama Maulana Md. Velayet Hossain. (Provincial Library, Dacca.)

(*c*) ARITHMETIC—BENGALI.

(Infant Class and Classes I and II.)

1. Prathamik Ganit Shiksha, Part I. S. M. Dewan. (India Library, Dacca.)
2. Prathamik Patiganit, Part I. Bholanath Mukherjee. (U. N. Dhar and Co., Calcutta.)
3. Shishutosh Ganit, Part I. Nagendralal Chaudhury. (Nur Library, Dacca.)
4. Saral Ganit, Part I. Mohammad Abdul Hakim. (Karim Publishing House, Calcutta.)
5. Saral Nimna Ganit, Part I. Abul Hossain. (Modern Library, Dacca.)
6. Adhunik Patiganit, Parts I-II. Saradakanta Ganguli. (Students' Library, Calcutta.)
7. Ganit Sopan, Part I. Jaynul Abedin. (Eastern Library, Dacca.)
8. Saral Shishu Ganit. Abdul Hamid. (Sahjahan Library, Dacca.)
9. Sahaj Prathamik Ganit Shiksha, Part I. Ataul Hakim. (K. D. Dutt, Calcutta.)
10. Prathamik Ganit, Part I. Mohammad Khorshed Ali Khan. (The Great Eastern Library, Dacca.)
11. Primary Ganit, Part I. Ahmad Ullah. (Empire Library, Dacca.)

12. Pratham Ganit Shiksha, Part I. Satkari Chandra Ghosh and Phani Bhusan Ghosh. (Ajit Kumar Ghosh, Calcutta.)
13. Sahaj Patiganit, Part I. Kazi Motahar Hossain. (Itikatha Book Depot, Calcutta.)
14. Ganit Shiksha, Part I. Badaruddin Ahmad. (Aktarazzaman Khan, Dacca.)
15. Naba Shishu Ganit. Sarada Prasanna Das. (Kanailal Pal, Calcutta.)
16. Shishu Ganit, Part I. Khan Sahib Abdur Rub Chaudhury. (Islamia Library, Dacca.)
17. Shishuranjan Ganit Prasnamala, Parts I-III. Kalipada Basu. (J. K. Bose and T. Basu, Calcutta.)
18. Shishu Patiganit, Part I. Bholanath Saha. (Brindaban Dhar and Sons, Ltd., Calcutta.)
19. Nutan Pranalir Prathamik Ganit. Surendra Nath Das and Dinesh Chandra Majumdar. (Surendra Nath Mukhoti, Faridpur.)
20. Shishu Ganit, Part I. Bhabani Prasad Chakravarty. (Ghosh and Co., Calcutta.)
21. Ganit Prabesh. Abani Bhusan Chatterjee. (Dinataran Mukherjee, Calcutta.)
22. Prathamik Ganit Shiksha, Part I. Jadab Chandra Chakravarty and Atul Chandra Chakravarty. (B. Banerjee and Co., Calcutta.)
23. Ganit Mukul, Part I. Sahayaram Bhattacharyya. (Indian Publishing House, Calcutta.)
24. Saral Ganit, Part I. Kshitinath Ghosh. (Kamala Book Depot, Ltd., Calcutta.)
25. Prathamik Ganit, Part I. Khan Bahadur Abdur Rahman Khan. (Provincial Library, Dacca.)
26. Ganit Mukul. Debi Bhusan Ghosh. (Benoy Bhusan Mitra, Calcutta.)
27. Saral Shishu Ganit, Part I. Jiban Krishna Sarkar. (Saraswat Library, Calcutta.)
28. Sachitra Ganit Korak, Part I. Gosthabihari Haldar. (Kripasaran Haldar, Calcutta.)
29. Prathamik Ganit Shiksha. Madhusudan Sarkar. (Chakravarty, Chatterjee and Co., Ltd., Calcutta.)
30. Chheleder Ganit. Surendra Mohan Datta. (Longmans Green & Co., Ltd., Calcutta.)
31. Sachitra Prathamik Patiganit, Part I. Radharaman Chakravarty. (A. C. Samanta, Calcutta.)
32. Prathamik Ganit, Part I. Mahendra Kumar Das. (Author, Dacca.)
33. Prathamik Ganit Sopan, Part I. Mohammad Abdul Hai. (Islamia Library, Dacca.)
34. Ganit Bikash. Radhaballav Goswami and Nirojnath Mukherjee. (M. Mansuruddin Bhuyan, Dacca.)

35. Adarsha Saral Ganit, Part I. M. Abul Kasem. (Mukhdumi Library, Calcutta.)
36. Prathamik Sahaj Ganit, Part I. Khagendra Nath Chakravarty. (B. Banerjee & Co., Calcutta.)
37. Shishu Ganit, Part I. Hashmat Ali Chaudhury. (Dacca Library, Dacca.)
38. Chheleder Ganit. Serajul Islam. (Tajmahal Library, Calcutta.)
39. Shishuder Ganit, Part I. Muhammad Shahabuddin. (Nur Library, Dacca.)
40. Shishu Ganit, Part I. Mono Mohan Ray Chaudhury. (The Central Book Agency, Calcutta.)
41. Nimna Ganit, Part I. Prasanna Narayan Kali. (Nagendra Narayan Kali, Dacca.)
42. Saral Prathamik Ganit, Part I. Taranath De. (Brindaban Dhar & Sons, Ltd., Calcutta.)
43. Nutan Ganit, Parts I, II and III. Abdus Sadeque. (Abdul Kader, Calcutta.)
44. Nutan Ganit, Part I. Dr. Shashindra Chandra Dhar. (Popular Agency, Calcutta.)
45. Ganit Shiksha, Part I. Ali Akbar Khan. (Bharati Library, Dacca.)
46. Nabu Prathamik Ganit, Part I. Panchkari Sarkar. (S. C. Addya & Co., Ltd., Calcutta.)
47. Ganit Diksha, Jagat Mohan Sen. (Jogendra Publishing House, Calcutta.)
48. Saral Ganit Shiksha, Parts I, II and III. Abdul Majid. (Ripon Library, Dacca.)
49. Prathamik Saral Patiganit, Part I. Abdus Samad. (Minerva Library, Dacca.)
50. Chhotader Ganit, Part I. Abdul Wadud. (Kohinoor Library, Dacca.)

ARITHMETIC—URDU.

Tashil-Ul-Hisab. Mohamed Shafiq Athar. (H. M. Said & Sons, Calcutta.)

ARITHMETIC—BENGALI.

(Classes III and IV.)

1. Ganit Prasun. Abani Bhusan Chatterjee. (Dinataran Mukherjee, Calcutta.)
2. Saral Nimna Ganit, Part II. Abul Hossain. (Modern Library, Dacca.)
3. Saral Ganit, Part II. Md. Abdul Hakim. (Karim Publishing House, Dacca.)

4. Saral Shishu Ganit, Part II. Jiban Krishna Sarkar. (Saraswat Library, Calcutta.)
5. Nutan Patiganit. Jnanada Kishore Chaudhury and Ajit Kumar Das Gupta. (Anil Kumar Das Gupta, Calcutta.)
6. Shishuranjan Ganit Prasnamala, Parts IV-V. Kalipada Basu. (J. K. Basu and T. Basu, Calcutta.)
7. Prathamik Ganit, Part II. Mahendra Kumar Das. (Author, Dacca.)
8. Charu Ganit, Part II. Ekramuddin Ahmed. (Nur Library, Bagerhat, Khulna.)
9. Shishutosh Patiganit, Part II. Tara Kumar Sen Gupta. (Author, Faridpur.)
10. Saral Prathamik Patiganit, Parts III-IV. Mohini Mohan Roy. (G. C. Chakravarty, Calcutta.)
11. Saral Ganit Shiksha, Madhusudan Sarkar. (Chakravarty, Chatterjee & Co., Ltd., Calcutta.)
12. Prathamik Ganit Sopan, Part II. Md. Abdul Hafiz. (Islamia Library, Dacca.)
13. Shishu Ganit, Part II. Mono Mohan Roy Chaudhury. (The Central Book Agency, Calcutta.)
14. Sahaj Ganit Shiksha, Part II. Dr. Sukumar Ranjan Das. (Pramode Nath Sen, Calcutta.)
15. Primary Ganit, Part II. Ahmad Ullah. (Empire Library, Dacca.)
16. Nutan Patiganit, Part I. Kazi Motahar Hossain. (Itikatha Book Depot, Calcutta.)
17. Primary School Ganit, Serajul Islam. (Tajmahal Library, Calcutta.)
18. Prathamik Ganit Shiksha, Part II. Jadab Chandra Chakravarty and Atul Chandra Chakravarty. (B. Banerjee & Co., Calcutta.)
19. Saral Ganit, Part II. Kshiti Nath Ghosh. (Kamala Book Depot, Ltd., Calcutta.)
20. Chhotader Ganit, Part II. Abdul Wadud. (Kohinoor Library, Dacca.)
21. Shishutosh Ganit, Part II. Nagendralal Chaudhury. (Nur Library, Dacca.)
22. Sahaj Prathamik Ganit Shiksha, Part II. Ataul Hakim. (R. Pal, Calcutta.)
23. Prathamik Ganit Bikash, Part II. Manada Charan Gupta. (Subodh Chandra Majumdar, Calcutta.)
24. Primary Ganit. Kazi Fazlul Haque. (The Eastern Agency, Dacca.)
25. Chhotader Ganit Shiksha, Part II. Abdus Samad. (India Library, Dacca.)
26. Shishu Shiksha Patiganit, Parts IV-V. Nirmal Chandra Banerjee. (N. Banerjee, Calcutta.)

27. Saral Prathamik Ganit, Part II. Tara Nath De. (Brindaban Dhar & Sons, Ltd., Calcutta.)
28. Saral Ganit, Part II. Rai Bahadur Aghore Nath Adhikary. (Macmillan & Co., Ltd., Calcutta.)
29. Prathamik Saral Patiganit, Part II. Abdus Samad. (Minerva Library, Dacca.)
30. Shishu Patiganit, Part II. Bholanath Saha. (Birendra Kumar Sinha, Dacca.)
31. Ganit Mukul, Part II. Sahayaram Bhattacharyya. (Indian Publishing House, Calcutta.)
32. Ganit Mukul, Part II. Chinta Haran Roy. (Students' Emporium, Barisal.)
33. Prathamik Shiksha Board Ganit, Part II. Abdul Matin and Ershad Ali Khan. (Liakat Publishing Co., Dacca.)
34. Nimna Ganit, Part II. Prasanna Narayan Kali. (Nagendra Narayan Kali, Dacca.)
35. Prathamik Patiganit, Part II. Radharaman Chakravarty. (Mohsin & Co., Calcutta.)
36. Saral Ganit Shiksha. Parts IV-V. Abdul Majid. (Sheikh Sahajada, Dacca.)
37. Shishu Ganit, Part II. Bhabani Prasad Chakravarty. (Ghosh & Co., Calcutta.)
38. Adhunik Shishu Ganit, Part II. Sudhansu Mohan Mitra. (B. Banerjee & Co., Calcutta.)
39. Shishu Ganit, Part II. Khan Sahib Abdur Rub Chaudhury. (Islamia Library, Dacca.)
40. Sahaj Ganit Shiksha, Part II. Ansar Ali and Abdul Kader. (Provincial Library, Calcutta.)

ARITHMETIC—URDU.

The Modern Arithmetic, Book I, Parts I-II. K. C. Bhattacharyya. (Indian Press, Ltd., Allahabad.)

(*d*) GEOGRAPHY.

(*Class II.*)

No text-book is required for pupils in this class, and instruction should be oral, and on the following lines:—

The subject should be introduced by conversation about the neighbourhood—its roads, waterways, railways, where these come from, where they go to, and what traffic is seen on them.

The children should be shown how to measure the dimension of the school room, the house and the grounds, the teacher drawing on the blackboard plans which the children will copy.

The children should be given the idea of direction and the cardinal points of the compass. Ideas of hills, valleys, plains, rivers, lakes,

islands, etc., are to be gained from pictures and models to be made in clay or wood.

Children should observe the position of the school village in the thana or the district map and calculate distances; observe the position of the district in the map of the province. Stories should be told about journeys to important places such as Calcutta, Darjeeling, etc.

The following books and maps may be used for the purpose of oral instruction :—

1. Byabaharik Shishu Bhugole. G. Das Gupta. (Brindaban Dhar and Sons, Ltd., Calcutta.)
2. Adarsha Bhougalik Path, Part I. Radhasyam Basu. (B. Banerjee & Co., Calcutta,)
3. Sachitra Naba Bhugole Path. Shashi Bhusan Chatterjee and Baidyanath Chatterjee. (S. B. Chatterjee & Sons, Calcutta.)
4. Prathamik Bhu-bidya. Part I. Nagendra Lal Chaudhury. (Popular Agency, Calcutta.)
5. Prathamik Bhugole Parichaya. Nalin Chandra Mukherjee. (Author, Naihati, 24-Parganas.)
6. Prathamik Bhugole Sopan, Part I. Md. Rashid and Pitambar Nath. (Empire Library, Dacca.)
7. Primary Bhugole, Part I. Kedar Nath Majumdar and Birendra Kishore Tarafdar. (Popular Library, Dacca.)
8. Sachitra Prathamik Bhugole Shiksha, Part I. Panchakari Sarkar. (B. Banerjee and Co., Calcutta.)
9. Bhugole Sopan, Part I. Abdul Majid. (The Eastern Agency, Dacca.)
10. Bhugole Sopan. Kazi Abdur Rashid. (Provincial Library, Dacca.)
11. Prathamik Bhu-parichaya. Nepal Chandra Ray. (Kalipada Ray, Calcutta.)
12. Prathamik Bhugole. Khagendra Nath Mitra and Dwijendra Nath Dhar. (Radharani Devi, Calcutta.)
13. Chhotader Bhugole Shiksha, Part I. Abdur Rashid. (Kohinoor Library, Dacca.)
14. Prithibir Manchitra. (Eagle Lithographing Company, Calcutta.)
15. Bangala Prathamik Bhuchitrabali. (Macmillan & Co., Ltd., Calcutta.)

(Classes III and IV.)

1. Naba Bhugole Katha. G. Das Gupta. (Brindaban Dhar and Sons, Ltd., Calcutta.)
2. Prathamik Bhugole. Hashmat Ali Chaudhury. (Dacca Library, Dacca.)
3. Bhugole Katha. Bejoy Sankar Sen Gupta. (Dacca Library, Dacca.)

4. Shishu Bhugole. Kumud Chandra Ray Chaudhury. (Indian Publishing House, Calcutta.)
5. Prathamik Bhugole Sopan, Part II. Md. Abdur Rashid and Pitambar Nath. (Empire Library, Dacca.)
6. Prathamik Shiksha Bhugole. Ramesh Chandra Chakravarty. (Chakravartti Chatterjee & Co., Ltd., Calcutta.)
7. Chhotader Bhugole. Nanigopal Chaudhury. (Dhirendra Nath Ghosh, Calcutta.)
8. Bhugole Mukul. Satish Chandra Chatterjee. (Kamala Book Depot Ltd., Calcutta.)
9. Naba Prathamik Bhugole. Kazi Abdur Rashid. (Provincial Library, Dacca.)
10. Prathamik Bhugole Parichaya. Haridas Mukherjee. (Sarbamangala Library, Calcutta.)
11. Chhotader Bhugole Shiksha, Part II. Abdur Rashid. (Kohinoor Library, Dacca.)
12. Chhotader Bhugole Path, Part II. Abdus Samad. (India Library, Dacca.)
13. Prathamik Bhugole Path. Biswanath Chatterjee. (Soor & Co., Calcutta.)
14. Bhugole Bijnan. Pranballav Basak. (Albert Library, Dacca.)
15. Prathamik Bhugole Path. Rajendra Nath Ghosh. (Macmillan & Co., Ltd., Calcutta.)
16. Prathamik Bhugole Shiksha. Abdus Samad. (Minerva Library, Dacca.)
17. Naba Bhugole Shiksha, Parts I-II. Shashi Bhusan Chatterjee and Baidyanath Chatterjee. (S. B. Chatterjee & Sons, Calcutta.)
18. Shishutosh Bhugole, Part II. Nuruddin Ahmed. (Nur Library, Dacca.)
19. Prathamik Bhugole. Phanibhusan Mukherjee and Pashupati Chatterjee. (Nalini Ranjan Chatterjee, Calcutta.)
20. Bhugole Parichaya. Nripendra Nath Sinha. (Gour Mohan De, Calcutta.)
21. Chhotader Bhugole. Nalin Chandra Mukherjee. (Author, Naihati, 24-Parganas.)
22. Prathamik Bhugole. Aswini Kumar Dutta. (Tripura Store, Comilla.)
23. Prathamik Bhugole Path, Nrisingha Prasad Sen. (S. K. Mitra and Bros., Calcutta.)
24. Saral Bhugole Path. Bidhubhusan Das Gupta. (Anil Kumar Das Gupta, Calcutta.)
25. Primary Bhugole Path. Nabi Nowaz Khan Lodi. (Liakat Publishing Co., Dacca.)
26. Shishutosh Bhuparichaya. Kumudbandhu Das. (B. K. Ghosh, Calcutta.)
27. Prathamik Bhugole. Bhimapada Ghosh. (Sen Bros. & Co., Calcutta.)

28. Shishu Bhugole. Jogajiban Pal. (Birendra Kumar Sinha, Dacca.)
29. Bhougalik Path. Abdul Majid. (Provincial Library, Dacca.)
30. Shishuranjan Bhugole. Nishi Kanta Sen. (Central Book Agency, Calcutta.)
31. Prathamik Bhu-bidya, Part II. Nagendra Lal Chaudhury. (Popular Agency, Calcutta.)
32. Prathamik Bhugole Path, Part II. Abdul Hakim. (Islamia Library, Dacca.)
33. Chhotader Bhugole, Parts II-III. Kazi Akram Hossain. (Itikatha Book Depot, Calcutta.)
34. Primary Bhugole Path. Mritunjoy Bhattacharyya. (Nrityalal Seal's Library, Calcutta.)
35. Shishuranjan Bhugole. Tapasbala Devi. (Students' Library, Calcutta.)

GEOGRAPHY—URDU.

1. Hindustan Ka Ibtadai Jugraphiah. (Indian Press, Ltd., Allahabad.)
2. Sahl Geographiah, Parts I-II. Akhter Hossain. (Abdus Satter, Calcutta.)

(*e*) HISTORY.

(*Classes III and IV.*)

1. Chhotader Itihas. Kazi Akram Hossain. (Itikatha Book Depot, Calcutta.)
2. Maktab Pathya Bharat Itihas. A. K. Khalilur Rahman. (Islamia Library, Dacca.)
3. Maktab Pathya Bharat Itihas. Kazi Abdur Rashid. (Provincial Library, Dacca.)
4. Chhotader Maktab Itihas. A. Samad. (India Library, Dacca.)
5. Chhotader Maktab Madrasah Itihas. Miss Jaynab Rahim. (The Great Eastern Library, Calcutta.)
6. Tajmahal Bharat Itihas. Shamsun Nahar. (Bulbul Publishing House, Calcutta.)
7. Maktab Itikatha. A. M. Serajul Haque. (Mukhdumi Library, Calcutta.)
8. Shishuder Maktab Madrasah Itihas. Khan Bahadur Kazi Imdadul Haque. (Provincial Library, Calcutta.)
9. Itihas Mukur. Rakibuddin Ahmad. (Modern Library, Dacca.)
10. Maktab Itihas. Asraf Ali. (Aktarazzaman Khan, Dacca.)

11. Maktaber Bharat Itihas. Abdul Majid. (Empire Library, Dacca.)
12. Maktab Itihas. Md. Taherul Islam. (Liakat Publishing Company, Dacca.)

HISTORY—URDU.

Primary History of India. Safi Haider "Kauser". (The Star Book Depot, Calcutta.)

(*f*) KORAN, RITUAL OF ISLAM AND URDU.

FIRST YEAR.

(*Infant Class.*)

Practical work.—Islamic Salutation (Salam); how to make formal ablution (Wazu). To be taught by actual demonstration.

Information lessons.—Allah, Raul Angels, *Ketab-i Ilahi.* The meaning of the expressions to be explained.

Memory lessons.—Aoozo-billah, Bismillah, Kalmas. To be learnt by heart being explained in Bengali.

Writing.—Forming the letters of the Arabic alphabet.

(*Class I.*)

Practical work.—How to make "Maseh" and "Taiummum," Ghosul and Istenjah. Uses of the right and the left hand. To be taught by actual demonstration.

Information lessons.—Qayamat, Akherat, Heaven, Hell, Farz, Sunnat pure and impure water. The meaning of the expressions to be explained.

Memory lessons.—Azan, Aquamat, Tasbih-i-ruku, Tasbih-i-Sejdah. To be learnt by heart after being explained in the vernacular.

Reading.—Recognition of the Arabic and Urdu alphabets and spelling of simple words. "Quaida-i-Bagdadi" to be used. Sura-i-Fateha, Sura-i Ikhlas, Sura-i Falaq and Sura-i Naas. To be committed to memory.

Writing.—Writing letters and words of two and three letters.

(*Class II.*)

Practical lessons.—Azan. How to perform "Namaz." To be taught by actual demonstration.

Information lessons.—Wajeb, "Nafl," "Halal", "Haram", Prophets and Saints. Respect to be shown when mentioning the names of Prophets and Saints. Shabebarat, "Shabe-qadr," "Shabe-meraj." Food forbidden. To be explained.

Memory lessons.—Iman-i-Mujammul, Iman-i-Mufassil; Sana, Tashahud, Darood Shareef. To be committed to memory after proper explanation in the vernacular.

Reading.—The first half of Ampara, *i.e.*, up to Surai Gashiah, to be read. At least one-third of the Suras to be committed to memory.

Writing.—Writing words of four or more letters and transcribing passages for the text.

Urdu.—A simple Primer (Urdu-ki-Pahli Kitab, or Islam-ki-Pahli Kitab).

(Class III.)

Practical work.—Namaz in congregation, Namaz-i-Vetr; Namaz-i-Juma; Namaz-i-Idul-Fitr; Namaz-i-Id-uz-Zoha.

Information lessons.—Mustahab, Sherk, Bedat, Arkan-i-Islam. Namaz-Mufsedat-i-Namaz; Makruhat-i-Namaz; Qaza-i-Namaz. Roza—Times for Roza; Mufsedat-i-Roza; Makruhat-i-Roza; days Sadaq, Fitr.

Memory lessons.—Doa-i Qunoot and Monajat.

Reading.—The second half of Ampara and the first chapter of the Koranic Alif-Lam-Mim.

Writing.—Copying passages from the text, *vide* Class I.

Urdu—A simple Reader: Urdu-ke-Dusri-kitab, or Diniyat-ka-Pahila Resala.

(Class IV.)

Practical work.—Namaz-i-Tarabih, Namaz-i-Janaza, Namaz-i-Qasar, Sijda-i-Soho, Invalids' Namaz Namaz when walking or riding.

Information lessons.—Zakat; on whom it is incumbent; rate, to what purposes may Zakat be devoted, to what it may not, *vide* Class I.

Fitra.—On whom it is incumbent, rate, to what purposes may it be devoted, to what it may not.

Haj.—On whom it is incumbent.

Death.—Last services to the dying, bathing, Kafar, Namaz-i-Janaza, carrying the bier, burial.

Zabeh, Qorbani.

Good manners, eating, drinking, retiring to bed, dress, company, mosque.

Ninety-nine names of God.

Names of the principal Prophets mentioned in the Holy Qoran.

Names of the principal Angels mentioned in the Holy Qoran.

Names of the Ashrai-Mobash-sherah.

Names of the six recognised collators of Hadis.

Names of the Imams.

Memory lessons.—The niats of Taravih, Janaza, Namaz-i-Qasar, Niat-i-Roza, Niat-i-Qorbani, Niat-i-Aquiqa, Doa-i-Taravih.

Reading.—From the 2nd to the 5th chapter of the Qoran, *i.e.*, from Parai Saiyaqul to Wal Muh-Sanat. But an attempt should be made to finish the reading of the whole Qoran in this class.

Writing.—Copying from the text, *vide* Class II.

Urdu.—A Reader (Diniyat-ka-Dusra Resala, or a similar book).

READING.

(Class I.)

1. Maktab Madrasah Arabic Quaidah. Md. Obaidullah. (Islamia Library, Dacca.)
2. Arabi Quaidah O Qoran Shiksha. Abdus Sobhan. (Empire Library, Dacca.)
3. Arabi O Qoran Shiksha. Md. Osman Ghani. (Provincial Library, Dacca.)
4. Arabi Banan O Qoran Shiksha. Fazlur Rahman. (India Library, Dacca.)
5. Arabi Quaidah O Qoran Shiksha. Nur Ahmad. (The Eastern Agency, Dacca.)
6. Adarsha Arabi O Qoran Shiksha. Azhar Ali Khan. (The Great Eastern Library, Dacca.)
7. Arabi Quaidah O Qoran Shiksha. Md. Abdul Awal. (Tajmahal Publishing House, Dacca.)
8. Nutan Arabi Quaidah O Qoran Path. Hafizuddin Ahmad. (Firoz Library, Mymensingh.)
9. Arabi Qoran Path Shiksha. Hafez Mohammad Hatem. (Liakat Publishing Company, Dacca.)
10. Maktab Madrasah Arabic Quaidah Shiksha. Hafez Muhammad Hatem. (Liakat Publishing Co., Dacca.)

(Classes I and II.)

Arabi Banan O Qoran Shiksha. Maulana Md. Badiuzzaman. (Kohinoor Library, Dacca.)

(Class II.)

Maktab Madrasah Amm-parah. Md. Abdus Sobhan. (Islamia Library, Dacca.)

WRITING.

(Infant Class and Classes I and II.)

Arabic Copy Book, Parts I-III. A. M. Anisur Rahman. (Mukhdumi Library, Calcutta.)

(Classes I to III.)

1. Arabic Copy Book, Parts I-III. A. B. Md. Osman Ghani. (Provincial Library, Dacca.)
2. Obaidi Arabic Copy Book, Parts I-III A. T. Md. Obaidullah. (Islamia Library, Dacca.)

(*g*) OBSERVATION LESSONS (FOR BOYS).

(Infant Class.)

Observation lessons.—To be begun by conversation lessons on the things in the school such as benches, desks, stools; children measuring the benches, desks, etc., collecting leaves, flowers and fruits from plants and trees growing in the locality and comparing them as to shape, colour, smell, number, etc. Additional observation lesssons should be given in correlation with other class subjects

(Class I.)

Observation lessons—Collection and observation of plants such as may be available in the locality, comparing the different parts of each, root, stem, leaves, bark, flowers and fruits with those of another. Collecting crop plants growing in the season. Conversation about the food materials obtained from each. The organs of our body and their uses; children measuring and comparing the respective lengths of their arms, legs, fingers and their height. The teacher testing their eyesight, power of hearing.

(Class II.)

Observation lessons.—Growth of plants to be observed by growing any kind of pulse and paddy in pots or in small plots. To observe the roots and seed leaves and mark the difference. Experiments to show the effect of light and moisture on growth. Collecting other plants having roots and seed leaves like those grown. Collecting and observing plants having creeping or climbing stems. Plants growing in water, plants producing no flowers. Observing leaf buds and flower buds and parts of a flower.

(Class III.)

Nature study based on school gardening. [*Recommended for rural schools (optional).*]—Laying out a garden, a plot of 4 to 6 square cubits, for each scholar, or if the compound is not spacious enough, a common plot for all, for purposes of experiment. Seed testing—sowing 50 or 100 seeds of each of several kinds of plants, paddy, pulses, jute, mustard, according to the time of the year in each plot or separate parts of the common plot. Each scholar to keep a diary in which to note down the date of sowing, the time taken for germination, the percentage of germination, the rate of growth after germination. In each stage of growth the scholars will pull up a specimen and observe the roots, their uses and growth, the stems and leaves and their uses and structure; the flowers, their parts and uses, the methods of fertilization, the fruits and seeds. All these to be noted in the diary. To observe the kinds of soil—clayey, sandy, loamy; the power of each to absorb and retain moisture. Plant food in the soil. The effect of manures, showing the effect of different manures as cowdung, oilcake, ashes and nitrate of soda on the growth of plants, of phosphates of fruits, etc. The plots should be drawn to scale and all results recorded in the note book.

(Class IV.)

Nature study based on school gardening (optional).—Boys may work in pairs, one of Class III and another of Class IV if single plots are available, otherwise all on a common plot, one being set apart for boys of Class III for experiments only and another for those of class IV.

Plans of work to be prepared in September every year; the plots to be sown with particular seeds should be set out to scale in the note-book; plans should include also indoor work, such as raising early seedlings of onions, cauliflowers, cabbages in plots or boxes. Following operations to be explained—digging: its effect, purpose; to sow at depths suitable to various seeds; to prepare trenches —manuring effect and purpose; plant, food, seedling, crops to be shown—(1) jute, (2) *aus* paddy, (3) maize, (4) *aman* paddy, (5) pulses, (6) mustard, (7) potato, (8) gram, also vegetables—brinjal, radish, turnip, cauliflower, onion, chilli, flowers grown on borders of each plot—arrangements should be made to produce a continuous supply of vegetables throughout the year. Lessons on rotation, on insect pests and insecticides. Records to be kept of the quantity of seed used and of the produce.

N B—No text-books are required for the use of pupils in the above classes. The following books may be used by teachers for the purpose of oral instruction :—

(Infant Class and Class I.)

1. Prathamik Paryyabekshan Shiksha, Part I. Dr. Subodh Kumar Majumdar. (Subodh Chandra Majumdar, Calcutta.)

2. Prakriti Paryyabekshan, Parts I-II. Hemendra Chandra Mukherjee. (The Central Book Agency, Calcutta.)
3. Prathamik Prakriti Parichaya, Part I. Haridas Mukherjee. (Sarbamangala Library, Calcutta.)
4. Sachitra Paryyabekshan Path, Part I. Surendra Nath Banerjee. (Soor and Co., Calcutta.)
5. Sachitra Paryyabekshan Path, Part I. Mahimaranjan Mukherjee. (Sarbamangala Library, Calcutta.)
6. Prakriti Parichaya, Parts I-II. G. Das Gupta. (Brindaban Dhar and Sons, Ltd., Calcutta.)
7. Chhotader Prakriti Parichaya, Part I. Girija Prasanna Majumdar. (Bharat Publishing House, Calcutta.)
8. Prathamik Paryyabekshan Path, Part I. M. A. Razzaq. (Mukhdumi Library, Calcutta.)
9. Paryyabekshan Path, Part I. Md. Abid Ali. (Ahsanullah Book House, Ltd., Calcutta.)
10. Prathamik Paryyabekshan Shiksha, Part I. Satyaranjan Sarkar. (Subhash Library, Calcutta.)

(Infant Class and Classes I and II.)

1. Paryyabekshan Pranali, Parts I-III. Hemendra Kumar Bhattacharyya. (Brindaban Dhar and Sons, Ltd., Calcutta.)
2. Prathamik Paryyabekshan Path, Part I. Jatindra Nath Mitra. (Tajmahal Publishing House, Dacca.)
3. Paryyabekshan Sahaya. Kazi Motahar Hossain. (Aktarazzaman Khan, Dacca.)
4. Prakriti Paryyabekshan, Part I. Rajkumar Sen and Phanibhusan Datta. (B. Banerjee and Co., Calcutta.)
5. Prathamik Paryyabekshan Path. Nagendralal Chaudhury. (Priyadarshan Datta, Dacca.)
6. Prakritir Katha, Part I. Hariram Dhar. (Popular Library, Dacca.)

(Class II.)

1. Prathamik Paryyabekshan Shiksha, Part II. Dr. Subodh Kumar Majumdar. (Subodh Chandra Majumdar, Calcutta.)
2. Paryyabekshan Path, Part II. Mohammad Abid Ali. (Ahsanullah Book House, Ltd., Calcutta.)
3. Prathamik Prakriti Parichaya, Part II. Haridas Mukherjee. (Sarbamangala Library, Calcutta.)
4. Prakriti Paryyabekshan, Part III. Hemendra Chandra Mukherjee. (The Central Book Agency, Calcutta.)
5. Prathamik Paryyabekshan Path, Part II. M. A. Razzaq. (Mukhdumi Library, Calcutta.)

(Classes II and III.)

Prakriti Parichaya, Parts III-IV. G. Das Gupta. (Brindaban Dhar and Sons, Ltd., Calcutta.)

(Classes III and IV.)

1. Prathamik Prakriti Parichaya. Dr. Subodh Kumar Majumdar. (Sarbamangala Library, Calcutta.)
2. Prathamik Paryyabekshan Path, Part II. Jatindra Nath Mitra. (Tajmahal Publishing House, Dacca.)
3. Prakriti Paryyabekshan, Part II. Raj Kumar Sen and Phani Bhusan Datta. (B. Banerjee & Co., Calcutta.)
4. Prathamik Paryyabekshan, Path, Part II. Nagendralal Chaudhury. (Popular Agency, Calcutta.)

(Classes I to IV.)

Adarsha Maktab Primary Bastupath. Abdul Latif (Islamia Library, Calcutta.)

OBSERVATION LESSONS (FOR TEACHERS).

URDU.

Doroosul Moshahadah. Mohamed Shafiq Athar. (H. M. Said & Sons, Calcutta.)

II.—Optional Subjects.

(*a*) HYGIENE (FOR BOYS) OR HYGIENE AND DOMESTIC ECONOMY (FOR GIRLS).

(Class I.)

(To be taught conversationally by means of pictures and, where possible, by models or simple demonstrations about things which boys can see with their eyes.)

1. Bodily cleanliness.
2. Neatness and cleanliness of clothes, hands, hair, etc.
3. Care of the teeth.
4. Bathing.
5. Proper posture to be adopted in sitting, standing, etc.
6. Need for cleanliness in connection with calls of nature and taking of food.
7. Need for avoiding water which is polluted.

8. Attention of the boys may be directed to flies and mosquitoes, whether in the schools or in their homes.

9. Boys may be warned about bad habits, such as spitting.

N.B.—No text-book is required for pupils in this class.

The following books are recommended for the use of teachers in imparting oral instruction:—

1. Saral Sharir Palan. Dr. Krishnagopal Bhattacharyya and Satipati Bidyabhusan. (Harisadhan Basu, Calcutta.)
2. Shishuder Swasthyaniti. Dr. Satish Chandra De. (B. Banerjee & Co., Calcutta.)
3. Saral Swasthya Raksha. Dr. Biseswar Chatterjee. (Nanigopal Chatterjee & Co., Calcutta.)
4. Swasthya Suhrid, Part I. Dr. K. P. Roy. (Sudhir Kumar Chakravarty, Calcutta.)
5. Swasthya Bandhab, Part I. Cap. Hirendra Chandra Mallik. (School Book Society, Calcutta.)
6. Primary Swasthya Path. Rai Bahadur Dr. Atul Krishna Ray. (Sarbamangala Library, Calcutta.)
7. Saral Sharir Palan. Kalidhan Banerjee. (K. Banerjee, Calcutta.)
8. Prathamik Swasthya Path. Dr. Upendra Nath Manna. (Lakshmi Publishing House, Calcutta.)
9. Chhotader Swasthya. Dr. Jamini Nath Ghosh. (Santosh Library, Dacca.)
10. Sachitra Swasthya Katha, Part I. Dr. Jagadish Chandra Sen. (Soor & Co., Calcutta.)
11. Sachitra Swasthya Katha, Part I. Dr. Subodh Kumar Sen. (The Book Company, Ltd., Calcutta.)
12. Chhotader Swasthyer Katha. Dr. Abhay Kumar Sarkar. (Sarkar & Sons, Faridpur.)
13. Saral Swasthya Raksha. Kazi Abdur Rashid. (Provincial Library, Dacca.)
14. Saral Swasthya Shiksha, Part I. Dr. Azizul Haque. (Empire Library, Dacca.)
15. Prathamik Swasthyaniti. Dr. Mafizuddin Talukdar. (Rashidia Library, Tangail.)
16. Chhotader Dehapalan, Part I. Dr. Md. Fahimuddin and Mir Abdul Gafur. (M. M. Salehin, Mymensingh.)
17. Saral Swasthya Sakha. Girindra Nath Banerjee. (Ajit Kumar Ghosh, Calcutta.)
18. Prathamik Sharir Palan, Part I. Dr. Tarapada Basu and Panchanan Ganguli. (Students' Library, Dacca.)
19. Shishu Swasthya. Dr. Benoy Kumar Roy. (Author, Dacca.)
20. Galpe Swasthya Shiksha. Dr. Amarendra Nath Basu. (Minerva Library, Dacca.)

21. Swasthya Sahaya, Part I. Dr. Md. Bazlur Rahman. (Modern Library, Dacca.)
22. Shishur Swasthya. Dr. Charu Chandra Mukherjee and Dr. Manibhusan Haldar. (B. Banerjee & Co., Calcutta.)
23. Saral Swasthya Shiksha, Part I. Dr. Ansar Ali. (Sahjahan Library, Dacca.)
24. Adarsha Swasthya Path. Dr. Ohiduddin Mahmood and Mrs. Shamsun Nahar. (Bulbul Publishing House, Calcutta.)
25. Sachitra Swasthyer Katha. Dr. Haradhan Basu. (Sarada Sahitya Bhaban, Calcutta.)
26. Swasthyer Katha, Part I. Dr. K. D. Ghosh and Sudhansu Sekhar Gupta. (Indian Press, Ltd., Calcutta.)
27. Shishu Swasthya, Part I. Magforuddin Ahmed. (Mukhdumi Library, Calcutta.)
28. Primary Swasthya, Part I. Mohammad Mozaffar Ali. (Ahsanullah Book House Ltd., Calcutta.)
29. Swasthya Raksha, Part I. Dr. Manoranjan Chakravarty and Ashutosh Dhar. (Brindaban Dhar & Sons, Ltd., Calcutta.)
30. Sharirer Jatna. Dr. Bibhutibhusan Chatterjee. (Vidyodaya Library, Calcutta.)
31. Adarsha Swasthya Path. Rai Sahib Jagadananda Roy. (Brindaban Dhar & Sons, Ltd., Calcutta.)
32. Swasthya Bijnan, Part I. Dr. Ramesh Chandra Bhattacharyya. (Popular Agency, Calcutta.)
33. Saral Swasthya Katha, Part I. Dr. Serajul Islam. (M. K. Das, Dacca.)
34. Saral Palli Swasthya. Dr. Kamakhya Charan Banerjee. (Narayan Chandra Banerjee, Calcutta.)

HYGIENE.

(Class II.)

1. Swasthyaraksha, Part II. Dr. Manoranjan Chakravarty & Ashutosh Dhar. (Brindaban Dhar & Sons, Ltd., Calcutta.)
2. Saral Swasthyabidhi. Dr. Jogendra Nath Maitra. (J. N. Acharyya, Calcutta.)
3. Sachitra Swasthya Katha, Part II. Dr. Subodh Kumar Sen. (The Book Company Ltd., Calcutta.)
4. Sachitra Saral Swasthya Path, Part I. Dr. Shibamay Mandal. (Nath, Nandi & Co., Calcutta.)
5. Saral Swasthya Path. Dr. Jamini Nath Ghosh. (Santosh Library, Dacca.)
6. Chhotader Swasthya Bijnan, Part I. Dr. Ohiduddin Mahmood & Mrs. Shamsun Nahar Mahmood. (Bulbul Publishing House, Calcutta.)
7. Prathamik Swasthyer Katha. Dr. Niradbaran Mandal. (Bhabani Prasad Chatterjee, Calcutta.)

8. Shishu Swasthyabidhi, Part I. Dr. Hari Prasad Chaudhury. (New Bengal Press, Calcutta.)
9. Adarsha Swasthya Shiksha, Part I. Dr. Kalipada Ghosh & Kabiraj Anath Bandhu Das. (P. Basu, Calcutta.)
10. Chhotader Swasthya, Part I. Khan Mohammad Mainuddin & Dr. Golam Majed Chaudhury. (Students' Library, Calcutta.)
11. Saral Swasthya Path, Part II. Dr. Habibar Rahman & Khan Mohammad Mainuddin. (The Great Eastern Library, Calcutta.)
12. Saral Swasthya Shiksha, Part I. Dr. Jiauddin Ahmed. (Karim Publishing House, Dacca.)
13. Swasthya Bijnan, Part I. Ambika Charan Datta & Kshitinath Ghosh. (Kamala Book Depot, Ltd., Calcutta.)
14. Prathamik Swasthyaniti, Part I. Dr. Kumud Sankar Roy, & Dr. Surendra Nath Sen. (Macmillan & Co. Ltd., Calcutta.)
15. Palli Swasthya, Part I. Dr. Kamakhya Charan Banerjee. (Narayan Chandra Banerjee, Calcutta.)
16. Saral Swasthya Shiksha, Part II. Dr. Ansar Ali. (Sahjahan Library, Dacca.)
17. Swasthya Bandhab, Part II. Captain Hirendra Chandra Mallik. (School Book Society, Calcutta.)
18. Chhotader Swasthya Path, Part II. Dr. Amir Hossain. (Kohinoor Library, Dacca.)
19. Nutan Swasthya Bijnan, Part I. Dr. Abhay Kumar Sarkar. (Sarkar & Sons, Faridpur.)
20. Chhotader Swasthyer Upaya, Part I. Dr. Abdul Aziz. (India Library, Dacca.)
21. Swasthya Sopan. Dr. Jyotirmaya Banerjee. (Indian Publishing House, Calcutta.)
22. Shishu Swasthya, Part II. Magforuddin Ahmed. (Mukhdumi Library, Calcutta.)
23. Swasthya Bijnan, Part I. Dr. Upendra Nath Manna. (Lakshmi Publishing House, Calcutta.
24. Prathamik Swasther Katha, Part I. Dr. Satish Chandra Chatterjee & Nalini Ranjan Chatterjee. (Ramdulal Chatterjee, Calcutta.)
25. Saral Swasthya Raksha. Dr. Chunilal Mukherjee. (U. N. Dhar & Co., Calcutta.)
26. Prathamik Swasthya Path, Part I. Dr. L. M. Biswas. (C. C. Guha, Dacca.)
27. Swasthya Suhrid, Part II. Dr. K. P. Roy. (Sudhir Kumar Chakravarty, Calcutta.)
28. Primary Swasthya O Garhasthya Bidhan. Rai Bahadur Sarat Chandra Brahmachary. (Students' Library, Calcutta.)
29. Sharir Palan, Part I. Saiyed Abul Hashem. (Shaikh Maniruddin & Co., Calcutta.)
30. Sharir Palan. Abdul Mannan. (A. Rahim, Dacca.)

31. Saral Swasthya Katha. Rai Bahadur Dr. Atul Krishna Roy. (Sarbamangala Library, Calcutta.)
32. Prathamik Sharir Palan, Part II. Dr. Tarapada Basu & Panchanan Ganguli. (Students' Library, Dacca.)
33. Adhunik Swasthya Katha. Dr. Abani Mohan Das. (N. C. Nandy, Dacca.)
34. Chhelemeyeder Sharir Raksha. Anukul Chandra Shastri. (Gupta & Sons, Dacca.)
35. Swasthyakahini, Part I. Girish Chandra Basu & Capt. Sudhir Kumar Basu. (Ghosh & Co., Calcutta.)
36. Saral Swasthya Katha, Part I. Dr. Abinash Chandra Ghosh, & Dr. N. C. Guha. (Hindusthan Library, Dacca.)
37. Swasther Katha. Dr. Narayan Chandra Banerjee. (H. Chatterjee & Co., Calcutta.)
38. Swasthya Raksha. Dr. Benoy Kumar Roy. (Author, Dacca.)
39. Chhotader Dehapalan, Part II. Dr. Jaynal Abedin & Mir Abdul Gafur. (M. M. Salehin, Mymensingh.)

HYGIENE—URDU.

1. Hefze Sehat, Part I. Dr. J. Banerjee. (Indian Publishing House, Calcutta.)
2. Rafiqus-Sehat. Mohamed Shafiq Athar. (H. M. Said & Sons. Calcutta.)

HYGIENE (FOR BOYS).

(Class III and IV.)

1. Swasthya Sañachar. Rai Bahadur Dr. Atul Krishna Ray. (Sarbamangala Library, Calcutta.)
2. Sachitra Swasthya Katha, Part III. Dr. Jagadish Chandra Sen. (Soor & Co., Calcutta.)
3. Chhotader Swasthya, Part II. Khan Mohammad Mainuddin & Dr. Golam Majed Chaudhury. (Students' Library, Calcutta.)
4. Swasthya Bijnan, Part II. Ambika Charan Datta & Kshitinath Ghosh. (Kamala Book Depot, Ltd., Calcutta.)
5. Nutan Swasthya Bijnan, Part II. Dr. Abhoy Kumar Sarkar. (Sarkar & Sons, Faridpur.)
6. Adarsha Swasthya Shiksha, Part II. Dr. Kalipada Ghosh & Kabiraj Anath Bandhu Das. (P. Bose, Calcutta.)
7. Balakder Swasthya Rakhsa. Anukul Chandra Shastri. (Gupta & Sons, Dacca.)
8. Swasthyer Katha, Part II. Surendra Chandra Chakravarty. (Chackervertti, Chatterjee & Co., Ltd., Calcutta.)

9 Primary Swasthya Bijnan, Part II. Rai Bahadur Dr. Jaharlal Das & Rai Bahadur Sarat Chandra Brahmachary. (Students' Library, Calcutta.)

10. Swasthya Path, Part II Bisweswar Chatterjee (Nanigopal Chatterjee & Co., Calcutta.)

11. Chhotader Swasthya Bijnan, Part II. Dr. Ohiduddin Mahmood & Mrs. Shamsun Nahar Mahmood. (Bulbul Publishing House, Calcutta.)

12. Maktaber Swasthya Katha. Dr. Mafizuddin Talukdar (Provincial Library, Dacca.)

13. Chhotader Swasthyer Upaya, Part II. Dr. Abdul Aziz. (India Library, Dacca.)

14 Chhotader Swasthya Shiksha, Part III. Dr. Saifuddin Ahmed. (Islamia Library, Calcutta.)

15. Swasthya Raksha, Part III. Dr Monoranjan Chakravarti & Asutosh Dhar. (Brindaban Dhar & Sons, Ltd., Calcutta.)

16. Swasthya Rakha Bidhi, Part II. Dr. Jaynal Abedin & Abdul Majid. (The Eastern Agency, Dacca)

17. Prathamik Swasthyaniti, Part II. Dr. Kumud Sankar Roy & Dr. Surendra Nath Sen. (Macmillan & Co., Ltd., Calcutta.)

18. Prathamik Swasthya Raksha. Dr. Chunilal Mukherjee. (U. N. Dhar & Co., Calcutta.)

19. Sachitra Swasthya Katha. Parts III & IV. Dr. Subodh Kumar Sen. (The Book Company, Ltd., Calcutta.)

20. Swasthya Kahini, Part II. Girish Chandra Basu & Capt. Sudhir Kumar Basu. (Ghosh & Co., Calcutta.)

21. Saral Swasthya Katha, Part III. Dr. Abul Khair Mohammad Siddiq. (M. K. Das, Dacca.)

22. Chhotader Swasthya Katha, Part II. Kazi Abdur Rashid. (Provincial Library, Dacca.)

23. Saral Swastha Path, Part III. Dr. Habibar Rahman & Khan Mohammad Mainuddin. (The Great Eastern Library, Calcutta.)

24. Saral Swasthya Path. Dr. Maniklal Mukherjee. (Nrityalal Seal's Library, Calcutta.)

25. Shishu Swasthya Bidhi, Part II Dr. Hari Prasad Chaudhury. (New Bengal Press, Calcutta.)

26. Sharir Palan, Part II Saiyd Abul Hashem. (Shaikh Maniruddin & Co., Calcutta.)

27. Chheleder Swasthya, Dr. Benoy Kumar Roy. (Author, Dacca.)

28. Saral Swasthyaniti, Part II. Dr. Birendra Mohan Guha (Manimohan Basu, Calcutta.)

29. Palli Swasthya, Part II. Dr. Kamakhya Charan Banerjee. (Narayan Chandra Banerjee, Calcutta.)

30. Saral Swasthya Katha. Dr. Jyortimay Banerjee. (Indian Publishing House, Calcutta.)

HYGIENE—URDU.

Hefze Sehat, Part II. Dr. J. Banerjee. (Indian Publishing House, Calcutta.)

(Classes I-IV.)

Usul-i-Sehat. Safi Haider "Kausar". (The Star Book Depôt, Calcutta.)

HYGIENE (FOR GIRLS.)

(Classes III and IV.)

1. Swasther Katha, Part II. Surendra Chandra Chakravarty. (Chackervertti, Chatterjee & Co., Ltd., Calcutta.)
2. Swasthya Katha O Garhasthya Bijnan, Subodh Kumar Sen, Nila Sen. (The Book Company Ltd., Calcutta.)
3. Meyeder Swasthya. Dr. Benoy Kumar Roy. (Author, Dacca)
4. Meyeder Swasthya Katha. Rai Bahadur Dr. Atul Krishna Roy. (N. C. Majumdar, Calcutta.)
5. Balikadiger Sharir Palan, Part I. Dr. Bisweswar Chatterjee. (Nanigopal Chatterjee & Co., Calcutta.)
6. Shishu Swasthyaniti, Parts II & III. Capt. P. C. Chaudhury and G. Das Gupta. (Brindabhan Dhar & Sons, Ltd., Calcutta.)
7. Swasthya O Grihasthali. Dr. Kalipada Ghosh & Kabiraj Anath Bandhu Das. (P. Bose, Calcutta.)
8. Balikader Swasthya. Dr. Chunilal Mukherjee. (U. N. Dhar & Co., Calcutta.)
9. Meyeder Swasthya Bijnan. Dr. Abhoy Kumar Sarkar. (Sarkar & Sons, Faridpur.)
10. Swasthya O Garhasthyabidhan. Dr. Jyortimay Banerjee. (Indian Publishing House, Calcutta.)
11. Saral Swasthya Raksha. Dr. Hari Prasad Chaudhury. (New Bengal Press, Calcutta.)
12. Balikader Swasthya Raksha. Anukul Chandra Shastri. (Gupta & Sons, Dacca.)
13. Swasthya Katha, Part II. Dr. Indra Narayan Mukherjee. (Nalini Ranjan Chatterjee, Calcutta.)
14. Swasthya Bijnan. Ambika Charan Datta and Kshitinath Ghosh. (Kamala Book Depôt Ltd., Calcutta.)
15. Shishu Swasthya, Part III. Dr. Magforuddin Ahmed. (Mukhdumi Library, Calcutta.)

SYLLABUS IN NEEDLEWORK FOR GIRLS' SCHOOLS (OPTIONAL).

(Infant Class.)

Needle drill and hemming. Top sewing and running.

(Class I.)

Backstitching, filling and patch work, making pillow-cases and bags.

(Class II.)

Cross-stitching, making a chemise (gathers can be but need not be used for the band.) Plain knitting with two needles.

(Class III.)

Cutting out and making a plain petticoat. Making button-holes. Marking on cloth in vernacular characters. Knitting plain and purl with two needles.

(Class IV.)

Cutting out and making a jacket, button-holes and gathering pieces of cloth and putting it into a band. Darning and herring-boning-knitting of plain socks for babies.

Remarks.—No text-books to be used.

(*b*) MANUAL WORK (OPTIONAL).

(Class I.)

(*a*) Clay modelling—simple household utensils, pottery, etc., modelling in connection with the beginnings of Geography. The children should model from pictures or from models made by the teacher.

(*b*) Stick-laying with the use of seeds to shapes shown on a wall chart. The following shapes may be used:—

An umbrella, a house, a fence and a gate, a door, a window, a house with fence and gate, a tree (with half-stick), a verandah of a house, a man, a cart, a cow. Build up a hut from several new elements, children working together.

Remarks.—Wall charts and models.

(Class II.)

Tear out of paper, according to picture chart, a wall, a house, a man, a tree, a boat, a large pucca house, a cow, a hen, a vulture, a horse, a bullock-cart, a bridge, a man with a lathi, a man with a bundle on

his head. Multiply them by folding the paper and so build up a street, a railway engine, carriage, etc. Each model may be improved with pencil or colours. Make a book (using a pin for stitching), an envelope. The teacher may teach any paper-folding which he knows.

Remarks.—Wall charts and models.

(*Class III.*)

Clay-work combined with sticks.—The models suggested in the first and second years should be made with clay and sticks combined and any other materials available. All materials may be used, *e.g.*, straw for roof, leaves for plants, paper for man's clothes, scissors and knives may be used.

Remarks.—Wall charts and models.

(*Class IV.*)

1. Construct a cardboard ruler graduated in inches, half the ruler in half-inches, quarter of the ruler in quarter-inches, a sixth in eights and over in tenths.

2. Construct a cardboard scale showing 1 inch to a foot up to 3 feet. Measure and draw plans of furniture to scale.

3. Draw circles and simples geometrical figures (*e.g.*, triangles, square, oblong) to scale, cut out in cardboard. Save these models for future experiments.

4. Construct a cardboard 45° set square—copy direct from model—make another half-size. Construct a cardboard 30° and 60° set square. Refer to angles 1, 2, and 3 make them at each corner.

5. Draw and cut out triangles using set-squares.

6. Construct and cut out a protractor.

7. Graduate and cut out a thermometer scale—copy from actual object.

8. Draw and cut out the following flat objects:—a box with sides flattened out, a clock, a house with sides flattened out, a door, a window, a fence (made of pieces of paper cut to scale), a gate, a bridge with pillars, with arches, a picture frame, etc.

9. Models constructed to a scale but not in flat, an envelope (in paper), a tray, a picture frame, a box, a table, a stool, a house, a house with windows and doors. Add a fence to it. A weather-cock (working model), a kite, a windmill, a fan. Embellish and finish all these models in ways which may suggest themselves to an artistic temperament, but on no account must the finishing process be utilised to cover up inaccurate work.

10. Simple models in paper and cardboard illustrating history, literature and descriptive geography.

Remarks.—A text-book or wall charts showing the dimensioned drawings of the models.

Wall chart for Manual Work, Parts I-III. (S. B. Chatterjee & Sons, Calcutta.) Recommended for use as models in classes by teachers.

(*c*) ENGLISH (OPTIONAL).

(*Class III.*)

1. Modern English Primer, Egerton Smith. (The Book Company Ltd., Calcutta.)
2. The Oxford English Course, Indian Edition, Primer. Lawrence Faucett. (Oxford University Press, Calcutta.)
3. Jubilee Edition First Book of Reading (English Bengali). Rajkrishna Datta. (Datta Nephew & Co., Calcutta.)
4. Macmillan's King Readers—The King Primer—Anglo-Bengali. E. Marsden. (Macmillan & Co., Ltd., Calcutta.)
5. A New Primer of English or Bengali Speaking Children with Speed Exercises. (Macmillan & Co., Ltd., Calcutta.)
6. New Code Readers, Primer. B. C. Chatterjee. (B. B. Mukherji, Wellington Street, Calcutta.)
7. The Primary English Readers, Primer. A Razzaq. (Mir Golam Mahiuddin, Dacca.)
8. Modern Primer. Khan Bahadur Ahsanullah. (Ahsanullah Book House, Ltd., Calcutta.)
9. An English Primer. W. C. Wordsworth. (The Book Company Ltd., Calcutta.)
10. The Modern English Readers—Primer. J. Lahiri. (The Central Book Agency, Calcutta.)
11. Primary Readers, Primer. M. Fazlul Haque. (Karim Publishing House, Dacca.)
12. The Rose Primer. Ebrahim Khan and S. Azimuddin. (K. H. Din, Calcutta.)
13. The Modern Primer. Nilkrishna Mitra. (N. C. Sen, Calcutta.)
14. Jubilee Primer. J. L. Banerjee. (Chuckervertty, Chatterjee & Co., Ltd., Calcutta.)
15. Simple Readers, Primer. P. K. Guha. (Brindaban Dhar & Sons, Ltd., Calcutta.)
16. The Pearl Primer. N. C. Chakravarty. (The Graduate Book Agency, Dacca.)
17. New School Primer. Jogendra Nath Mitra and S. C. Mukherjee. (New Bengal Press, Calcutta.)
18. New Bengal Primer. P. Gupta. (New Bengal Press, Calcutta.)
19. New Sunshine Readers, Primer. Lotika Ghosh. (Indian Publishing House, Calcutta.)
20. Kohinoor Readers, Primer. Altaf Hossain. (Kohinoor Library, Dacca.)
21. Standard English Readers, Primer. A. Rub Chaudhury. (Albert Library, Dacca.)
22. Gem Primer. Sailendra Nath Sarkar. (U. N. Dhar & Co., Calcutta.)

23. The Lotus Primer. J. Ghoshal and H. Sen. (Harish Chandra Sen, Dacca.)
24. English Primer for Bengali Boys. Kazi Abdur Rashid. (The Provincial Library, Dacca.)
25. Clarendon Readers, Primer. (Oxford University Press, Calcutta.)
26. New Primer. Mahendra Kumar Doss. (B. K. Datta, Dacca.)
27. Simple English Primer. Bhabatosh Sen. (P. C. Sinha and Sons, Dacca.)
28. New Indian Readers, Primer. S. N. Roy & T. J. Collins. (Albert Library, Dacca.)
29. Jubilee English Primer. A. K. Mohammad Hossain. (The Islamia Library, Dacca.)
30. New Children's Primer. A. Mowat & D. L. Sircar. (Bina Library, Calcutta.)
31. The Rainbow Readers—Primer. (Anglo-Urdu.) T. S. Upot. (Indian Press, Ltd., Allahabad.)

(Class IV.)

1. Clarendon Readers—Book I. (Oxford University Press, Calcutta.)
2. The Primary English Readers—Reader I. A. Razzaq. (Mir Golam Mahiuddin, Dacca.)
3. The Modern Reader. Nil Krishna Mitra. (N. C. Sen, Calcutta.)
4. The Children's Reader. D. L. Sircar. (Bina Library, Calcutta.)
5. The Rose Reader, Book I. Ebrahim Khan and Azimuddin Ahmed. (K. H. Din, Calcutta.)
6. New Code Readers—First Book. B. C. Chatterjee. (B. B. Mukherjee, Wellington Street, Calcutta.)
7. New Sunshine Readers, No. I. Latika Ghosh. (The Indian Publishing House, Calcutta.)
8. Modern English Reader, Book I. Egerton Smith. (The Book Company, Ltd., Calcutta.)
9. First Lessons in English, Reader I. T. J. Collins. (Students' Library, Dacca.)
10. The Golden Readers—Book I. Sudhansu Mohan Mitra. (Minerva Library, Dacca.)
11. Royal Jubilee Reader. M. K. Ganguly. (Author, Barisal.)
12. New Bengal Reader. P. Gupta. (New Bengal Press, Calcutta.)
13. The Oxford English Course, Indian Edition, Book I. Lawrence Faucett. (Oxford University Press, Calcutta.)
14. Ruby Readers, Book I. Mahmood Hasan. (The Provincial Library, Dacca.)

15. Maktab English Reader. Syed Badruddoza. (Mukhdumi Library, Calcutta.)
16. Macmillan's King Readers, Reader I.—Anglo-Bengali. E. Marsden. (Macmillan & Co., Ltd., Calcutta.)
17. Jubilee Reader. J. L. Banerjee. (Chuckervertty, Chatterjee & Co., Ltd., Calcutta.)

WRITING.

(Classes III and IV.)

1. Saraswati Copy Slips, Parts I-II. (Macmillan & Co., Ltd., Calcutta.)
2. Ideal Copy Book, Parts I-II. Arun Chandra Dev. (N. C. Mazumdar, Calcutta.)
3. Primary Copy Book. Nos. 1-2. R. C. Chakravarty. (Chuckervertty, Chatterjee & Co., Ltd., Calcutta.)
4. Jubilee English Copy Book, Parts I-II. Abul Fazl Mahammad. (Islamia Library, Dacca.)
5. Model Copy Book. Nos. 1-2. Asutosh Dhar. (Brindaban Dhar & Sons, Ltd., Calcutta.)
6. New Copy Book. Nos. 1-2. G. N. Chatterjee. (A. C. Banerjee, Calcutta.)
7. New English Copy Book, Parts I-II. Kazi Abdur Rashid. (The Provincial Library, Dacca.)
8. New English Copy Book, Parts I-II. Shyam Chandra Datta. (Popular Library, Dacca.)
9. English Copy Slip, Parts I-II. Priyambada Nag. (Indian Publishing House, Calcutta.)
10. Ideal Copy Book, Parts I-II. A. K. Das Gupta. (Das Gupta & Sons, Calcutta.)
11. Semi Upright English Copy Book, Nos. I-II. A. M. Anisur Rahman. (Mukhdumi Library, Calcutta.)
12. Modern Copy Book. Nos. 1-2. S. K. Chakravarty. (K. C. Acharyya, Calcutta.)
13. The Ideal English Copy Book, Parts I-II. Hem Chandra Banerjee. (Minerva Library, Dacca.)
14. Primary Copy Book. Nos. 1-2. P. N. Chatterjee. (S. B. Chatterjee & Sons, Calcutta.)

(*d*) ZAMINDARY AND MAHAJANI ACCOUNTS.

(Primary Schools and Maktabs.)

(Class IV.)

1. Zamindary O Mahajani Shiksha. Abdul Hakim. (India Library, Dacca.)

2. Saral Zamindary O Mahajani Karyya Shiksha. Bejoy Kumar Ghosh. (Tara Library, Calcutta.)
3. Saral Zamindary O Mahajani Hisab. Bholanath Ghosh. (Indian Publishing House, Calcutta.)
4. Prathamik Zamindary O Mahajani Shiksha. Abdul Hakim. (Islamia Library, Dacca.)
5. Zamindary O Mahajani Shiksha. Khagendra Nath Ghosh. (B. K. Das, Calcutta.)
6. Zamindary O Mahajani Hisab. Anukul Chandra Dhar. (Author, Calcutta.)
7. Sahaj Zamindary O Mahajani Shiksha. Madhusudan Dev. (P. C. Majumdar & Bros., Calcutta.)
8. Zamindary O Mahajani Shiksha. Md. Yakub Hussain. (Ahsanullah Book House, Ltd., Calcutta.)
9. Adarsha Zamindary O Mahajani Shiksha. Kazi Abdur Rashid and Nirode Chandra Sen. (Provincial Library, Dacca.)

ZAMINDARY AND MAHAJANI ACCOUNTS. (URDU.)

Bahi Khata. (Indian Press, Ltd., Allahabad.)

CITY AND GUILDS OF LONDON INSTITUTE.

DEPARTMENT OF TECHNOLOGY.

Technological Examinations, 1936.

List of candidates who have passed the examination held in Bengal, April and May 1936.

Calcutta Centre.

Roll No.	Candidate's name.	School or workshop last attended.	Subject of examination.	Grade or section.	Class.
63	Ernest Joseph Paull ..	Messrs. J. B. Norton & Sons	Plumber's Work ..	Inter. ..	1
70	Jogendra Nath Nath ..	Ditto	Ditto ..	Ditto ..	1
1	Monohar Lal Bishnoi ..	Naskarpara Jute Mills ..	Jute Spinning ..	Final ..	2
27	Cyril Joseph Smith ..	Bengal Telephone Corporation, Ltd.	Telephony ..	Prelim. ..	1
86	Cyril James Perry ..	Ditto	Ditto ..	Ditto ..	2
15	Omprakash Mital ..	Garden Reach Workshop ..	Electrical Engineering Practice.	Pre. D. C. ..	P
88	Nirmalendu Sinha Chowdhury.	Calcutta Tramways Co., Ltd.	Ditto ..	Ditto ..	P
31	Nirendra Nath Sarkar ..	E. I. Railway Electrical Department.	Ditto ..	Inter. D. C. ..	P
68	Kuchibhotla Krishna Sastry	Nil .	Ditto ..	Ditto ..	P
89	Syed Abdul Sadiq ..	Garden Reach Workshop ..	Ditto ..	Ditto ..	P
91	J. I. Middleton ..	E. I. Railway Workshop ..	Ditto ..	Ditto ..	P
94	Tulsi Charan Nag ..	Rifle Factory, Ishapore ..	Ditto ..	Ditto ..	P
47	Haridas Banerjea ..	Calcutta Corporation Workshop.	Foundry Practice ..	....	2
118	Neyamat Ali	E. I. Railway Works, Jamalpur.	Ditto ..	....	1
31	Cecil Dennis Anthony Francis.	Lillooah Workshop ..	Machinists, Turners and Fitters' Work	Inter. ..	2
122	A. M. Khan	E. I. Railway Works, Jamalpur.	Ditto ..	Ditto ..	2
125	Richard Stratford ..	Ditto . ..	Ditto ..	Ditto ..	1
129	Radhika Nath Sinha ..	Ditto .	Ditto ..	Final ..	2
60	Bansi Lal Anand ..	College of Engineering, Jadavpur.	Sugar Manufacture	Ditto ..	2
115	Syed Abdul Sadiq ..	Garden Reach Workshop ..	Machine Design ..	I ..	P
58	Shib Charan Nag ..	Calcutta Electric Supply Corporation.	Electrical Engineering Practice.	Prelim. A. C. ..	P
95	Syed Abdul Sadiq ..	Garden Reach Workshop ..	Ditto ..	Ditto ..	P
96	Brij Mohan Lall ..	Bengal Telephone Corporation.	Ditto ..	Ditto .	P
101	Rajendra Nath Ghose ..	M. E. S., Ishapore ..	Ditto ..	Inter. A. C.	P
102	Tulsi Charan Nag ..	Rifle Factory, Ishapore ..	Ditto ..	Ditto ..	P
8	Parimal Basu Roy Chowdhury.	Burn & Co., Ltd., Howrah ..	Ditto ..	Final, Part I	P
	Ditto ..	Ditto	Ditto ..	Final, Part II, Sec. C.	2
9	Denis A. Manuel ..	B. N. Railway Workshop, Kharagpur.	Ditto ..	Final, Part I ..	P
	Ditto	Ditto	Ditto ..	Final, Part II, Sec. C.	2

Roll No.	Candidate's name.	School or workshop last attended.	Subject of examination.	Grade or section.	Class.
49	Nirmal Chandra Sanyal ..	College of Engineering, Jadavpur.	Electrical Engineering Practice	Final, Part I ..	P
	Ditto	Ditto	Ditto ..	Final, Part II, Sec. D.	2
50	Nirmal Chandra Guha ..	Ditto	Ditto ..	Final, Part I ..	P
	Ditto	Ditto	Ditto ..	Final, Part II, Sec. D.	2
54	Suresh Chandra Bose ..	Ditto	Ditto ..	Final, Part I	P
	Ditto	Ditto	Ditto ..	Final, Part II, Sec. D.	2
55	Hemanga Chandra Deb Maulik.	Ditto	Ditto ..	Final, Part I	P
	Ditto	Ditto	Ditto ..	Final, Part II, Sec. D.	2
56	Nagendra Kumar Roy ..	Ditto	Ditto ..	Final, Part I ..	P
	Ditto	Ditto	Ditto ..	Final, Part II, Sec. D.	2
109	Tara Prasanna Bhanja ..	Military Camp, Bankura ..	Ditto ..	Final, Part I ..	P
	Ditto	Ditto	Ditto ..	Final, Part II, Sec. D.	2
110	Jyotish Chandra Ghosh ..	College of Engineering, Jadavpur.	Ditto ..	Final, Part I ..	P
	Ditto	Ditto	Ditto ..	Final, Part II, Sec. D.	2
111	Sudhanshu Shekhar Sinha	Ditto	Ditto .	Final, Part I ..	P
	Ditto	Ditto	Ditto ..	Part II, Sec. D.	2
112	Karun Kumar Dutt ..	Ditto	Ditto ..	Final, Part I ..	P
113	Sunil Kumar Ghose ..	Ditto	Ditto ..	Final, Part I ..	P
	Ditto	Ditto	Ditto ..	Part II, Sec. D.	2
114	Kshitish Chandra Roy ..	Ditto	Ditto ..	Final, Part I ..	P
	Ditto	Ditto	Ditto ..	Final, Part II, Sec. D.	2
43	P. Subrahmanyam ..	Ditto	Ditto ..	Final, Part I ..	P
65	Birbahu Bhaduri ..	School of Motoring F. M. C. Co.	Motor Car Engineering.	Grade I ..	P
17	Omprakash Mittal ..	Garden Reach Workshop ..	Boiler House Practice	....	2
78	Dwarka Khosla ..	National Radio and Industrial Works, Ltd.	Radio Communication.	Prelim. ..	2
26	Lalit Mohan Kundu ..	Commissioners for the Port of Calcutta.	Machine Design ..	Grade II ..	1
71	Syam Sundar Gupta ..	E. I. Railway, Lillooah ..	Ditto ..	Ditto ..	2
73	S. Chandran ..	Carriage and Wagon Department, Lillooah.	Ditto ..	Ditto ..	1
3	E. Moorthi Lingram ..	Bengal Telephone Corporation	Telephony ..	Inter. ..	2
87	Brij Mohan Lall ..	Ditto	Ditto ..	Ditto ..	1
25	Prayaga Venkata Rao ..	Titagarh Paper Mill ..	Paper Manufacture	Ditto ..	2

Roll No.	Candidate's name.	School or workshop last attended.	Subject of examination.	Grade or section.	Class.
82	Keshee Vishnu Modak ..	Titagarh Paper Mill ..	Paper Manufacture	Inter. ..	2
83	R. Nanjund Rao ..	India Paper Pulp Company	Ditto ..	Ditto ..	1
5	S. K. Bose	E. I. Railway Works, Lillooah	Railway Carriage and Wagon building.	Ditto ..	2
6	Daulat Ram Sarma ..	Ditto	Ditto ..	Ditto ..	1
76	O. P. Agarwal ..	Ditto	Ditto ..	Ditto ..	2
132	B. B. Mookerjee ..	E. B. Railway Workshop, Kanchrapara.	Ditto ..	Ditto ..	1
133	Balai Chandra Bhar ..	Ditto	Ditto ..	Ditto ..	1
135	Kanti Mohan Chatterjee ..	Ditto	Ditto ..	Final ..	2
39	Dilbaghrai Bahl ..	Wireless Branch, Indian Posts and Telegraph Department.	Radio Communication.	Ditto ..	2
28	Deb Kumar Sarkar ..	Kesoram Cotton Mill ..	Plain Cotton Weaving.	Ditto ..	2
		Serampore Centre.			
9	Hirendra Chandra Chakravorty.	Government Weaving Institute, Serampore.	Dyeing of Cotton ..	Inter. ..	2
10	Sudhendra Nath Mitra ..	Ditto ..	Ditto ..	Ditto ..	2
13	Manmatha Nath Bhattacharyya.	Ditto	Ditto ..	Ditto ..	2
14	Manindra Lal Nath ..	Ditto	Ditto ..	Ditto ..	2
16	Pramode Krishna Sarma Acharyya.	Ditto	Cotton Spinning	II ..	1
35	Jagadish Chandra Sanyal	Ditto	Jute Weaving ..	II ..	2
37	Suryya Lal Bhattacharyya	Ditto	Ditto ..	II ..	2
30	Munindra Lal Nath ..	Ditto	Ditto ..	II ..	1
17	M. Abul Qasem ..	Ditto	Plain Cotton Weaving.	Final ..	2
21	Nirmal Mohan Chowdhury	Ditto	Ditto ..	Ditto ..	2
22	Ramesh Chandra Nath Bhowmik.	Ditto	Ditto ..	Ditto ..	1
27	Amiya Bhusan Bose ..	Ditto	Ditto ..	Ditto ..	1
28	Md. Dobiuddin ..	Ditto	Ditto ..	Ditto ..	2
31	Pramode Krishna Sarma Acharyya.	Ditto ..	Ditto ..	Ditto ..	1
		Berhampore Centre.			
16	Birendra Narayan Roy Chowdhury.	Government Silk Weaving and Dyeing Institute, Berhampore.	Plain and Fancy Cotton Weaving.	II ..	2
19	Ubaidul Haq Arabi ..	Ditto	Silk and Rayon Throwing and Spinning.	2nd year ..	P

Roll No	Candidate's name	School or workshop last attended	Subject of examination	Grade or section.	Class.
20	Sarbani Prasad Choudhury	Government Silk Weaving and Dyeing Institute, Berhampore.	Silk and Rayon Throwing and Spinning	2nd year	P
18	Aditya Ranjan Choudhury	Ditto	Chemistry as applied to Cotton Industry.	..	2
1	Himangshu Chandra Sen	Ditto	Plain Cotton Weaving.	I ..	2
2	Kali Prassanna Ghose ..	Ditto	Ditto ..	I ..	1
3	Sarbani Prasad Chowdhury	Ditto	Ditto ..	I ..	2
4	Mesbah Uddin Ahmed ..	Ditto	Ditto ..	I ..	1
5	Md. Abu Hossain ..	Ditto	Ditto ..	I ..	2
6	Sunil Kumar Ghose ..	Ditto	Ditto ..	I ..	1
8	Mir Md. Asmar Ali	Ditto	Ditto ..	Final ..	2
9	Kali Das Bose ..	Ditto	Ditto ..	Ditto ..	1
10	Suresh Chandra Das ..	Ditto	Ditto ..	Ditto ..	1
11	Dobendra Kumar Dev Nath	Ditto	Ditto ..	Ditto ..	1
12	Amarendra Nath Dutta ..	Ditto	Ditto ..	Ditto ..	2
13	Aditya Ranjan Chowdhury	Ditto	Ditto ..	Ditto ..	2
14	Birendra Narayan Roy Chowdhury.	Ditto	Ditto ..	Ditto ..	1
15	Nrityo Gopal Biswas ..	Ditto	Ditto ..	Ditto ..	1
		Dacca Centre.			
20	Kali Sankar Guha ..	Ahsanulla School of Engineering.	Structural Engineering.	Inter. ..	1
22	Ranendra Nath Sarkar ..	Ditto	Ditto ..	Ditto ..	1
11	Jitendra Kumar Bose ..	Dhakeshwari Cotton Mills, Ltd.	Plain Cotton Weaving.	I ..	1
12	Anil Kumar Niyogi	Ditto	Ditto	Final ..	2
		Berhampore Detention Camp.			
1	Sasanta Kumar Maity ..	....	Machine Design ..	II ..	2

N.B.—A, B, etc., denote the sections; I or II, the Division; 1 or 2, the class in which the candidate has passed. P signifies that the candidate has passed in a subject in which there is no distinction of class.

A. N. SEN, *Secretary,*

City and Guilds Examination Committee, Bengal.

NOTICE.

The Treasury Buildings, Calcutta, the 21st September 1936.

The following programme for the next Divisional Accountants Examination to be held at the Bengal Engineering College, Sibpur, in January 1937, is published for general information :—

Wednesday, 20th January 1937—

11 a.m.—Writing and Dictation.

12—4 p.m.—Book-keeping.

Thursday, 21st January 1937—

11—12 a.m.—Essay Writing.

1—5 p.m.—Arithmetic.

Friday, 22nd January 1937—

11 a.m.—1 p.m.—Geometry.

2—4 p.m.—Mensuration.

2. Applications from the intending candidates will be received by the Deputy Accountant-General, Bengal (Works), up to 12 a.m. of the 15th November 1936. These should be accompanied by the necessary certificates and fees as prescribed in the rules.

G. W. GLASS,

Dy. Accountant-General, Bengal.

Calcutta University.

Senate House, the 18th September 1936.

CIRCULAR No. S/294.

The Registrar of the Calcutta University has issued the following for general information :—

The Vice-Chancellor and Syndicate have withdrawn the privilege of provisional recognition enjoyed by the Raniganj Marwari Sanatan Vidyalaya in the district of Burdwan. They have debarred the Head Master Babu Prafullakumar Sen, B.A., from serving in any recognised High English School as Head Master or Assistant Head Master and the Assistant Head Master Babu Ramsidh Singh from employment in any recognised school under this University. They have further ordered that the students of Class X of the above school should be granted immediate transfer certificates and that the schools in which they will seek admission should scrutinise their cases strictly and satisfy themselves about their *bonafides* before admitting them into their respective schools.

J. CHAKRAVORTI, *Registrar.*

Calcutta University.

Senate House, the 31st July 1936.

NOTIFICATION No. S/292/O.U.

In modification of previous orders on the subject it is hereby notified for general information that students migrating from other Universities or Boards of Secondary Education other than the Dacca Board for purposes of their admission to the Matriculation Examination of this University as regular students in 1939 and subsequent years will ordinarily be required to prosecute a regular course of study in a recognised school or schools for a period of at least two school years previous to the examination at which they intend to appear. They will therefore have to join Class IX of a High School recognised by this University within the month of January and to conform to the usual rules of migration.

Exception may, however, be made by the Syndicate in regard to Bengali and Assamese students residing outside Bengal and Assam who are desirous of taking advantage of the facilities available here. They shall not be admitted into Class X after January without the special permission of the Syndicate, which must in each case be previously obtained. But, as the school session in Assam begins in March, students who desire admission into Class X of a recognised High School in Assam shall not be admitted after March without the special permission of the Syndicate. Exception may also be made in the case of students if their migration to this University is caused by the bonafide transfer of their guardians.

All special cases referred to above will also have to be submitted to the University in the prescribed form together with the requisite fees and documents.

J. CHAKRAVORTI, *Registrar.*

Dacca Division.

Ramna, Dacca, the 18th September 1936.

Programme of the Primary (Maktab) Final Examination, 1936.

	Marks.
Tuesday, 17th November 1936—	
Forenoon (10 a.m. to 12-30 p.m.)—	
Arithmetic and Subhankari ...	80
12-30 to 1 p.m.—	
Mental Arithmetic ...	20
Afternoon (1-30 to 3-30 p.m.)—	
Optional subjects—Manual Work (75), Nature Study (75) or Science (75) (Oral).	

	Marks.
Wednesday, 18th November 1936—	
Forenoon (10 a m. to 12-45 p.m.)—	
Bengali Literature, Grammar and Composition ..	80
*Reading 25 marks (15 *plus* 10).	
Afternoon (12-45 to 1 p m.)—	
Dictation ...	20
1-30 to 3-30 p m.—	
Drawing Optional (75), Urdu and Ritual (75) (Oral).	
Thursday, 19th November 1936—	
Forenoon (10 a m to 12-30 p.m.)— History .	75
Afternoon (1 to 3-30 p m)—	
English Optional (75) (Oral).	

	Marks.
Friday, 20th November 1936—	
Forenoon (10 a.m. to 12-30 p.m.)—	
Geography (Oral).	
If necessary the examination may continue for the whole day where the number of examinees is very large. Moslem boys should be discharged before 12-30 p m.	
Saturday, 21st November 1936—	
Forenoon (10 a.m. to 12-30 p.m.)—	
*Hygiene . ..	75
Afternoon (1 to 3-30 p m.)—	
Zemindary Mahajani (optional) ..	75

*Optional for maktabs and compulsory for primary schools

N. B.—The Muslim candidates especially those who observe the Ramzan should be examined before others and the number of oral examiners increased if necessary

A. H. KHAN CHAUDHURY,
Inspector of Schools, Dacca Division

Registered No. C207

The Calcutta Gazette

THURSDAY, SEPTEMBER 24, 1936.

PART II

Advertisements.

Notices

Advertisements, Notices, etc., intended for insertion in this part of the Gazette must be sent to Press before 12 noon on Saturday, and all costs deposited and proofs returned by 4 p.m. on Monday. Manuscripts and postal remittances must be addressed to Superintendent, Government Printing (Publication Branch), Bengal Government Press, Alipore.

For the convenience of advertisers located in Calcutta, arrangements have been made to accept advertisements and prepayment of charges at Sales Office, Ground Floor, Writers' Buildings, Calcutta. The latest time for receipt of advertisements for current week's Gazette has been extended till 4 p.m. on Mondays.

In the High Court of Judicature at Fort William in Bengal, in Insolvency.

NOTICE OF ADJUDICATION ORDER.

Nos. 113 and 114 of 1936.

Re Sumermull Surana, a firm carrying on business in piecegoods at No. 113, Monohardas Chowk, in the town of Calcutta, under the same name, style and firm, the partners whereof are Sumermull Surana and Champalal Golcha. Ex parte the creditors.

R. L. Gupta and Hem Ch. De and Co., Attorneys for the creditors.

ON the 25th day of August 1936 an order was made by the High Court of Judicature at Fort William in Bengal in its insolvency jurisdiction adjudging the abovenamed firm as insolvent.

Note.—All debts due to the estate should be paid to me.

Dated this 14th day of September 1936.

G. M. FALKNER, Official Assignee.

In the High Court of Judicature at Fort William in Bengal, in Insolvency.

NOTICE OF ADJUDICATION ORDER.

No. 115 of 1936.

Re Hari Charan Dey, Sailendra Nath Dey and Jiban Krishna Dey until lately jointly carrying on business in partnership under the name and style of K. C. De and Sons at No. 96, Lower Chitpore Road, in the town of Calcutta, and all residing at No. 13, Nanda Mullick Lane, in Calcutta aforesaid. Ex parte the creditor.

S. K. Ganguly & Co., attorneys for the creditor.

ON the 25th day of August 1936 an order was made by the High Court of Judicature at Fort William in Bengal in its insolvency jurisdiction adjudging the abovenamed as insolvents.

Note.—All debts due to the estate should be paid to me.

Dated this 16th day of September 1936.

G. M. FALKNER, Official Assignee.

In the High Court of Judicature at Fort William in Bengal, in Insolvency.

NOTICE OF ADJUDICATION ORDER.

No. 129 of 1936.

Re Wilford Dewhirst Young, residing at No. 17, Lord Sinha Road, in the town of Calcutta, and employed as an assistant by Messrs. Phelps & Co., at No. 21, Old Court House Street, Calcutta, ex parte the debtor in person.

ON the 10th day of September 1936 an order was made by the High Court of Judicature at Fort William in Bengal in its insolvency jurisdiction adjudging the abovenamed as an insolvent.

Note.—All debts due to the estate should be paid to me.

Dated this 15th day of September 1936.

G. M. FALKNER, Official Assignee.

In the High Court of Judicature at Fort William in Bengal, in Insolvency.

NOTICE OF ADJUDICATION ORDER.

No. 130 of 1936.

Re Arnold Gantzer, residing at No. 26, Chowringhee, suite No. 20, in the town of Calcutta, employed as an "Instructor" by the East Indian Railway, 105, Clive Street, Calcutta, ex parte the debtor in person.

ON the 16th day of September 1936 an order was made by the High Court of Judicature at Fort William in Bengal in its insolvency jurisdiction adjudging the abovenamed as an insolvent.

Note.—All debts due to the estate should be paid to me.

Dated this 19th day of September 1936.

G. M. FALKNER, Official Assignee.

Land Sale Notices.

Notification A.

NOTICE is hereby given under sections 6 and 13 of Act XI of 1859 that the undermentioned estates and shares of estates in the district of Birbhum will be put up for sale at the office of the Collector of that district on the 25th September 1936, at 12 noon, for arrears of revenue (and other demands which by law are realisable as arrears of land revenue).

When in columns 5, 7 and 9 of the following statement it is stated that only a share is to be sold, it is to be understood that a separate account is kept for that share.

These estates are being advertised for sale for instalments of revnue due on or before the 31st Jaistha, 1343 B.S., of which the latest date of payment was 29th June 1936:—

Tauzi No.	Name of mahal and pargana.	Sadar jama of whole estate.	Whether the whole estate is to be sold.	If only a share is to be sold, specification of such share or shares.	Names of proprietors of property to be sold.	If only a share is to be sold, the sadar jama of such share.	If the whole estate is to be sold, the arrears due from it.	If only a share is to be sold, the arrears due from it.
1	2	3	4	5	6	7	8	9
		Rs. a. p.				Rs. a. p.	Rs. a. p	Rs. a. p.
2	Sahalampur, thana Dubrajpur, pargana Sahalampur.	52,008 5 0	No ..	Residuary share excepting S. A. Nos 4 to 11—8 gds. 3 kr. 1 kt. 13 tils share of mauzas Agoa, Mongalpur, Adampur, etc., in Groups I, III, IV, V, VI, VII and VIII and 12 annas of share mauzas in Group IX.	Shamapada Basu and others.	7,645 10 8	..	611 5 5
				S. A. No. 7—11 as. 17 gds. 3 kr. 7 tils share of mauzas Pirijpur, Pirpur, Kamalpur, etc. All other shares besides those specified above will be excluded from the sale.	Brahma Niranjan Chakraverty.	5,424 1 6	..	544 2 0
4	Senbhum, thana Bolpur, pargana Senbhum.	16,911 12 6	No ..	S A. No. 1—16 annas share of mauza Binuria in Group XI and 8 annas share of mauzas Chaumandalpur, Hansra, etc., in Group XII.	Sudhakar Mazumdar.	849 0 8	..	27 8 6
				S. A. No. 2—4 gds. 1 kr. 2 kt. 7 tils share of mauzas Kukutia, Raipur, etc.	Ranjit Sinha and others.	803 4 0	..	62 12 0
				S. A. No. 3—5 as. 6 gds. 2 kr. 2 kt. share of mauzas Raipur, Chowpahari jungle, Radhanagar, etc., and 16 annas share of mauzas Chandanpur, Palsa, Jahanabad, etc.	Subhasini Dassi	15,577 2 6	..	1,459 15 11
				S. A. No. 6—8 gds. 2 kr. 2 kt. 10 tils share of mauzas Raipur, Chowpahari jungle, Radhanagar, etc.	Anukul Chandra Sinha.	1,158 5 6	..	89 13 9
				S. A. No. 7—8 gds. 2 kr. 2 kt. 7 tils share of mauzas Kakutia, Raipur, Chowpahari jungle, etc.	Sudhir Kumar Sinha.	1,150 5 6	..	268 2 9
				S. A. No. 8—4 gds. 1kr 1kt. 7 tils share of mauzas Raipur, Chowpahari jungle, etc.	Nakula Bala Ghosh.	800 3 4	..	62 12 0
				S. A. No. 9— 8gds. 3kr. 2kt. 8 tils share of mauzas Raipur, Chowpahari jungle, Rupchak, etc.	Sudhir Kumar Sinha.	1,150 5 4	..	375 2 8
				S. A. No. 10.—8 gds. 3kr. 2kt. 8 tils share of mauzas Raipur, Chowpahari jungle, Radhanagar, etc.	Prokash Chandra Sinha and others.	1,150 5 4	..	375 2 8
				S. A.No 11.—4 gds. 1kr. 2kt. 6 tils share of mauzas Kakutia, Raipur, etc., in Groups Nos. I, III, IV, V, etc.	Saila Bala Debi	1,737 5 6	..	468 11 6
				S. A. No. 12.—1a. 15gds. 2kr. 14tils share of mauzas Kakutia, Raipur, Chowpahari jungle, Radhanagar, etc.	Minor Puspa Kumari Sinha.	4,050 14 8	..	465 2 9
				S. A. No. 20.—1 a. 15gds. 2kr. 10 tils share of mauzas Raipur, Radhanagar, Dakshingram, etc.	Bhola Nath Ghosh and others.	1,882 4 4	..	146 7 8
				S. A. No. 25—5gds. 3kr. 2kt. 1tilshare of mauzas Raipur, Kakutia in Bolpur thana ; 11gds. 3kr. 1kt. 14 tils share of mauzas Chowpahari jungle, etc. All other shares besides those specified above will be excluded from the sale.	Sourindra Narayan Sinha.	1,309 2 6	..	825 0 6

Tauzi No.	Name of mahal and pargana.	Sadar jama of whole estate.	Whether the whole estate is to be sold.	If only a share is to be sold, specification of such share or shares.	Names of proprietors of property to be sold.	If only a share is to be sold, the sadar jama of such share.	If the whole estate is to be sold, the arrears due from it.	If only a share is to be sold, the arrears due from it.
1	2	3	4	5	6	7	8	9
		Rs. a. p.				Rs. a. p.	Rs. a. p.	Rs. a. p.
14	Bhurkunda, pargana Bhurkunda, thana Bolpur.	15,142 9 0	No ..	S. A. No. 1– 2as 18gds. 1kr 1kt. share of the estate. All other shares besides that specified above will be excluded from the sale.	Birendra Nath Mustafi and others.	2,523 11 6	..	216 8 6
15	Tarapur, thana Moureshwar, pargana Swarupsinha.	13,470 8 0	Yes, 16 annas share.	....	Maharaj Kumar Jagadish Nath Roy.	..	830 8 0	..
16	Maheswarpur, thana Illambazar, pargana Senbhum.	12,897 8 7	No ..	S. A. No. 5– 4 annas share of mauzas Palsa, Jahanabad, Ulandi, etc., in Group XII.	Sudhir Kumar Sinha.	758 7 0	..	59 4 0
				S. A. No. 6 4 annas share of mauzas in Group XII.	Ditto ..	758 7 0	..	59 4 0
				S. A. No. 7– 4 annas share of mauzas in Group XII.	Prokash Chandra Sinha.	758 7 0	..	59 4 0
				All other shares than those specified above will be excluded from the sale.				
18	Kalikapur Krishnagar, thana Dubrajpur, pargana Jainujal.	6,284 6 0	Yes, 16 annas share.	....	Kumar Pashupati Nath Malia.	..	1,384 12 5	..
21	Balta, thana Suri, pargana Jainujal	10,846 5 0	No ..	S. A. No. 8 2 as. 10 gds. share of mauzas Rengumi, Bodpur, Chak Anulia, Jatra, Chhota Gungima, etc. All other shares besides that specified above will be excluded from the sale.	Hari Har Nath Das.	890 12 0	..	89 7 11
22	Salnthia, pargana Moureshwar Sabek, thana Salnthia.	15,160 9 0	No ..	S. A. No. 3– 13 gds. 1 kr. 1 kt. share of the estate.	Ponchanan Ghosh	631 4 6	..	0 15 3
				S. A. No 6– 13 gds. 1 kr. 1 kt. share of the estate.	Sanat Kumar Ghosh.	631 4 6	..	61 0 0
				S. A. No. 11 13 gds. 1 kr. 1 kt. share of the estate.	Tarapada Ghosh	631 4 6	..	60 15 3
				S. A. No. 12– 13 gds. 1 kr. 1 kt. share of the estate.	Ditto	631 4 6	..	60 15 3
				S. A. No. 14 –13 gds. 1 kr. 1 kt share of the estate. All other shares than those specified above will be excluded from the sale	Prosad Chandra Ghosh.	631 4 6	..	60 15 6
26	Indas, thana Labpur, pargana Kutubpur.	5,687 2 8	No ..	S. A. No. 1– 8 annas share of the estate. All other shares besides that specified above will be excluded from from the sale.	Kali Das Das ..	2,843 9 5	..	495 8 5
28	Daluk, thana Moureshwar, pargana Swarupsinha.	1,395 10 0	No ..	Residuary share excepting S. A. No. 1 7 as. 10 gds. share of the estate.	Nalini Ranjan Sinha and others.	654 3 0	..	64 6 0
				S. A. No. 1– 8 as 10 gds. share of the estate.	Kalachand Das and others.	741 7 0	..	74 10 6
31	Purandarpur, thana Suri, pargana Purandarpur.	6,290 4 0	No ..	S A. No 3 – 2 annas share of the estate.	Ram Ranjan Hati and others.	787 7 10	..	78 3 6
				S. A. No. 6—2 as. 10 gds. share of the estate. All other shares besides those specified above will be excluded from the sale.	Sunita Devi ..	984 4 5	..	97 12 6
34	Khala, thana Nanoor, pargana Barbaksinha.	3,750 2 9	No ..	S. A. No. 2 3 as. 10 gds. 3 kr. 2 kt. 5 ths share of the estate.	Girish Chandra Chandra and others.	831 6 6	..	26 11 3
				S. A. No. 7– 4 as. 2 kr. 1 kt. 10 ths share of the estate. All other shares besides those specified above will be excluded from the sale.	Ditto ..	941 11 3	..	60 11 3

Tauzi No.	Name of mahal and pargana	Sadar jama of whole estate.	Whether the whole estate is to be sold.	If only a share is to be sold, specification of such share or shares.	Names of proprietors of property to be sold.	If only a share is to be sold, the sadar jama of such share.	If the whole estate is to be sold, the arrears due from it.	If only a share is to be sold, the arrears due from it.
1	2	3	4	5	6	7	8	9
		Rs. a. p.				Rs. a. p.	Rs. a. p.	Rs. a. p.
35	Ramkantapur, thana Nanoor, pargana Barbaksinha.	2,560 6 0	No ..	S. A. No. 2—3 as. 10 gds. 3 kr. 2 kt. 5 tils share of the estate.	Girish Chandra Chandra and others.	567 9 1	..	17 12 3
				S. A. No. 7—4 as. 2 kr. 1 kt. 10 tils share of the estate.	Ditto ..	645 1 6	..	19 14 0
				All other shares besides those specified above will be excluded from the sale.				
40	Rautara, thana Dubrajpur, pargana Jainujal.	784 6 0	Yes, 16 annas share.	....	Ranee Broja Bala Debi.	..	74 6 0	..
53	Sahapur, thana Suri, pargana Jainujal.	3,131 5 6	No ..	S. A. No. 1—2 as. 13 gds. 1 kr. 1 kt. share of the estate.	Ditto ..	572 2 9	..	58 8 3
				All other shares besides that specified above will be excluded from the sale.				
66	Murandi, thana Labpur, pargana Kutubpur.	1,531 15 0	No ..	Residuary share excepting S. A. Nos. 1 and 2.	Suprobhat Chandra and others.	510 10 4	..	110 10 0
				All other shares besides that specified above will be excluded from the sale.				
73	Kirtihat, thana Labpur, pargana Khairgram.	1,070 5 6	No ..	S. A No 2 5 as. 6 gds 2 kr. 2 kt share of mauzas Sundara, Keshbati, Barakalikapur, Noapur, etc., in Groups I to XI.	Panchkori Debi and others.	654 7 9	..	654 2 7
				All other shares besides that specified above will be excluded from the sale.				
74	Ditto ..	2,222 13 0	No ..	Residuary share —4 as. 10 gds. 3 tils share of mauzas Sundara, Hapina, Bandihat, etc.	Sufia Khatun Bibi and others.	543 10 2	..	283 0 9
				All other shares besides that specified above will be excluded from the sale.				
84	Mandari, thana Labpur, pargana Khargram.	719 5 0	Yes, 16 annas share.	....	Maulvi Golam Gous and others.	..	52 5 0	..
89	Indas, thana Labpur, pargana Kutubpur.	3,876 4 0	No ..	Residuary share excepting S. A. Nos. 6, 8, 9 to 14—9 as. 10 gds. share of the estate.	Raghu Ram Bhattacharji.	809 13 3	..	25 4 0
				S. A. No. 10—16 annas share of mauzas Kendua, Pathorghata, Talbona, Indas, etc.	Nitai Chandra Sinha Biswas.	2,068 13 7	..	148 13 7
				All other shares besides those specified above will be excluded from the sale.				
90	Bansanka, thana Suri, pargana Jainujal.	3,769 11 6	Yes, 16 annas share.	....	Ram Ranjan Hazra and others.	..	375 6 0	..
94	Gokulia, thana Labpur, pargana Gokulia.	3,250 14 0	No ..	S. A. No. 1—8 annas share of the estate.	Chinmoyee Debi and others.	1,625 7 0	..	341 15 9
				S. A. No. 4 3 as. 15 gds. 2 kr. 13 tils share of the estate.	Ditto ..	767 9 1	..	22 8 5
				All other shares besides those specified above will be excluded from the sale.				
103	Karua, thana Suri, pargana Khatanga.	1,383 3 0	No ..	Residuary share excepting S. A. Nos. 1 to 7 and 10 and 12—5 as. 17 gds. 2 kt. share of the estate.	Bepin Behari Chatterjee and others.	504 6 9	..	36 4 8
				All other shares besides that specified above will be excluded from the sale.				
107	Punur, thana Muhammadbazar, pargana Akbarsahi.	1,176 13 0	No ..	Residuary share excepting S. A. Nos. 5 and 6 — 7 as. 18 gds. 3 kr. share of the estate.	Panchanan Bhattacharjee.	583 12 10	..	37 1 5
				All other shares besides that specified above will be excluded from the sale.				

Tauzi No.	Name of mahal and pargana.	Sadar jama of whole estate.	Whether the whole estate is to be sold.	If only a share is to be sold, specification of such share or shares.	Names of proprietors of property to be sold.	If only a share is to be sold, the sadar jama of such share.	If the whole estate is to be sold, the arrears due from it.	If only a share is to be sold, the arrears due from it.
1	2	3	4	5	6	7	8	9
		Rs. a. p.				Rs. a. p.	Rs. a. p.	Rs. a. p.
109	Dwarka, thana Labpur, pargana Ichapakhuria.	1,303 1 0	No ..	Residuary share excepting S.A. Nos. 1 and 2—16 annas share of mauza Sitalgram in Group 1, and 5 annas share of mauzas Sonachituri, Monachituri in Group 11, etc. All other shares besides that specified above will be excluded from the sale.	Sailendra Kumar Roy and others.	582 11 0	..	198 1 9
114	Bongram, thana Nanoor, pargana Barbaksinha.	2,526 4 0	No ..	Residuary share excepting S. A. Nos. 1 to 10—3 as. 4 gds. share of the estate. All other shares besides that specified above will be excluded from the sale.	Provash Chandra Mitra, sebait.	505 3 11	..	50 7 0
122	Bajitpur, thana Moureshwar, pargana Akbarsahi.	2,996 1 0	No ..	Residuary share excepting S.A. Nos. 1 to 3—7 as. 10 gds. share of the estate.	Syama Dasi Debi and others.	525 7 7	..	56 11 7
				S. A. No. 1—16 annas share of mauzas Dhobamandapur, Bajitpur, etc. All other shares besides those specified above will be excluded from the sale.	Md. Badruzza ..	639 12 7	..	25 8 8
125	Kanutia, thana Moureshwar, pargana Swarupsinha.	1,640 6 0	Yes, 16 annas share.	....	Gobinda Chandra Mazumdar.	..	1,720 9 11	..
143	Syam Sundarpur, thana Nanoor, pargana Barbaksinha.	2,113 13 0	No ..	Residuary share excepting S. A. Nos. 1 and 2—4as. 6gds. 1kr. share of the estate. All other shares besides that specified above will be excluded from the sale.	Sindhu Bala Dasi and others.	569 11 9	..	102 12 9
153	Bahiri, thana Bolpur, pargana Barbaksinha.	2,014 8 0	No ..	Residuary share excepting S. A. Nos. 1 to 3—6as. 8gds. 1kr. share of the estate. All other shares besides that specified above will be excluded from the sale.	Tulsi Ram Choudhury.	776 6 8	..	18 13 3
154	Sankhaha, thana Nanoor, pargana Barbaksinha.	2,745 9 0	No ..	S. A. No. 2—4 annas share of the estate. All other shares besides that specified above will be excluded from the sale.	Surath Nath Banerjee.	686 6 3	..	67 10 3
158	Kadipur thana Labpur, pargana Kutubpur.	851 4 0	Yes, 16 annas share.	....	Souresh Chandra Choudhury and others.	..	80 4 0	..
160	Kotalghosa, thana Labpur, pargana Kutabpur.	774 11 0	Do. ..	....	Rance Brojo Bala Debi.	..	77 11 0	..
162	Bhurkunda, thana Suri, pargana Jainujal.	3,702 3 9	Do. ..	....	Jana Ranjan Roy	..	319 7 3	..
167	Januri, thana Suri pargana Khatanga.	978 11 0	Do. ..	....	Raj Kalika Nanda Mukherjee Bahadur.	..	99 11 0	..
168	Mahisa, thana Moureshwar, pargana Swarupsinha.	745 13 0	No ..	Residuary share excepting S. A. No. 1—12as. 13gds. 1kr. 1kt. share of the estate. All other shares besides that specified above will be excluded from the sale.	Nalinakha Dutta and others.	590 6 11	..	59 3 8
170	Akuni, thana Mouroshwar, pargana Swarupsinha.	1,832 7 0	No ..	S. A. No. 2—16 annas share of mauzas Radhanagar, Kazipur, Tilpara, etc. All other shares besides that specified above will be excluded from the sale.	Tarapada Mukherjee and others.	572 10 0	..	29 5 0
172	Majhigram, thana Suri, pargana Khatanga.	3,422 4 0	No ..	Residuary share excepting S. A. No. 1—12 annas share of the estate.	Munshi Golam Gous and others.	2,566 11 0	..	193 11 0
				S. A. No. 1—4 annas share of the estate. All other shares besides those specified above will be excluded from the sale.	Syamapada Roy and others.	855 9 0	..	64 9 0

Tauzi No	Name of mahal and pargana	Sadar jama ofwhole estate	Whether the whole estate is to be sold	If only a share is to be sold, specification of such share or shares	Names of proprietors of property to be sold.	If the whole share is to be sold, the sadar jama of such share.	If the whole estate is to be sold, the arrears due from it.	If only a share is to be sold, the arrears due from it.
1	2	3	4	5	6	7	8	9
		Rs. a p.				Rs a p	Rs. a. p.	Rs. a. p.
176	Gopalnagar, thana Dubrajpur, pargana Kharid.	1,774 7 0	No .	S. A. No. 5 -15 as. 4gds. 2kr. 1kt. 15tils share of mauzas Agoa, Uttor Madanpur, etc. All other shares besides that specified above will be excluded from the sale.	Ranee Broja Bala Debi.	1,218 0 0	..	29 7 11
177	Rupuspur, thana Dubrajpur, pargana Kharid	3,524 15 0	No ..	S. A. No. 5— 1a. 3gds. 1kr. 1kt. share of the estate. All other shares besides that specified above will be excluded from the sale.	Kumar Brahma Niranjan Chakerverty.	2,102 7 5	..	208 0 0
216	Hatia, thana Labpur, pargana Fatepur.	1,935 0 0	No ..	Residury share except S. A Nos 1, 3, 4 and 5—5 as. 2 gds 2kr. share of mauzas Sashpur, Haripur etc , etc. All other shares besides that specified above will be excluded from the sale.	Mohendra Chandra Mukherjee and others	513 5 1	..	60 2 1
230	Nimtikuri, thana Suri, pargana Haripur	602 10 0	Yes, 16 annas share.	....	Ananda Moy Kabiraj and others.	..	6 11 3	..
234	Amrapalan, thana Suri, pargana Khatanga	565 7 11	No ..	Residuary share excepting S A No 1—16 annas share of mauza Abdurpur, Amrapalan, etc. All other shares besides that specified above will be excluded from the sale.	Surendra Narayan Sen and others.	534 8 6	..	24 13 0
245	Singan, thana Bolpur, pargana Barbaksinha	2,918 1 0	No ..	S. A. No. 2— 4 annas share of the estate. All other shares besides that specified above will be excluded from the sale.	Satish Chandra Basu.	729 8 3	..	37 14 9
250	Gonutia, thana Moureshwari, pargana Ichapakhuria.	3,732 9 0	No ..	Residuary share excepting S. A. No. 1—8 annas share of the estate. All other shares besides that specified above will be excluded from the sale.	Kumar Krishna Ghosh.	1,866 4 6	..	681 4 6
451	Bakhul, thana Labpur, pargana Kutubpur	2,806 5 0	No ..	Residuary share excepting S. A. Nos. 1 to 7. All other shares besides that specified above will be excluded from the sale.	Dharani Dhar Banerjee.	1,052 4 5	..	195 13 4
551	Jotemusa, thana Bolpur, pargana Jainujal.	1,013 10 0	No ..	Residuary share excepting S A. Nos. 5 and 11—16 annas share of mauzas Chhatarbandi, Bheramari, etc.	Syed Saha Muhammad Abdul Hafiz and others.	600 11 0	..	5 8 0
613	Kamiksha, thana Rampurhat, pargana Kumarprotap	971 8 6	Yes, 16 annas share.	....	Sharashi Krishna Banerjee and others.	..	130 10 8	..
623	Gopalpur, Darlbhadrapur, thana Nalhati, pargana Dhawa.	535 4 6	Do. ..	. ..	Swetbarani Debi	..	266 7 8	..
657	Baswan, thana Nalhati, pargana Kumarprotap.	3,572 8 8	No ..	S A. No. 4—3 as. 15 gds. share of the estate.	Azibatannessa Bibi and others.	837 5 6	..	532 5 6
				S. A. No. 10— 5as. 5 gds. share of the estate. All other shares besides those specified above will be excluded from the sale.	Khandkar Muhammad Abu-Ahason and others.	1,172 4 6	..	612 15 0
661	Barla, thana Nalhati, pargana Sahajadpur.	504 8 3	Yes, 16 annas share.	....	Purnendu Narayan Deb Barma and others.	..	230 7 0	..
666	Sankor Bhadrapur, thana Nalhati, pargana Dhawa	7,477 3 11	No ..	Residuary share excepting S.A. Nos. 1 and 2—11 annas share of mauzas Paschim Gobindapur, Radhagobindapur, Bhabanipur, etc.	Purna Chandra Trivedi and others.	5,140 8 8	..	1,425 7 9
671	Mahendrapur, thana Rampurhat, pargana Kumarprotap.	1,714 8 8	Yes, 16 annas share.	....	Ram Dassi Debi and others.	..	8 15 1	..
1003	Raghunathpur, thana Nalhati, pargana Sajahadpur.	717 4 0	Do. ..	....	Sabarnessa Bibi and others.	..	255 10 6	..
1219	Pakurhans, thana Nanoor, pargana Barbaksinha.	1,898 7 5	No ..	Residuary share excepting S. A. Nos. 2 to 6—4 as. 11 gds. 1kt. 7 tils share of the estate. All other shares besides that specified above will be excluded from the sale.	Profulla Chandra Mustafi and others.	540 8 1	..	79 4 4

Suri, the 2nd September 1936.

[ILLEGIBLE], *for* Collector.

Advertisement of sale.

NOTICE is hereby given that the undermentioned plots of land, no longer required by Government, situated along the B. A. K. Section of the East Indian Railway, in the district of Murshidabad, will be put up to sale at 12 o'clock noon on the 10th November 1936 corresponding to 24th Kartik, 1343 B.S. (Fasli), at the Court of the Subdivisional Officer, Jangipur, district Murshidabad.

The purchasers of the several plots of lands will be subject to the following conditions :—

1st.—The purchasers will have no power to make any excavations on the land nearer than fifteen feet from the railway boundary or to plough the land nearer than three feet from the same.

2nd.—If the amount of purchase money does not exceed Rs. 100 the whole amount must be paid down at once.

3rd.—If the amount of purchase money exceeds Rs. 100, one-fourth of the amount must be immediately deposited. If the balance be not paid by noon of the fifteenth day after the sale, reckoning the day of sale as one, or if that day be a close holiday, then by noon of the first succeeding office day, the sale shall be cancelled, the sum deposited being forfeited to Government and the lot again put up for sale at the risk of the defaulting purchaser, after issue of advertisement, as in the case of original sale.

4th.—The plots of land will be sold subject to an annual assessment of Rs. 34 which will be subject to revision at the next general settlement of the temporarily-settled estates of the district to the highest bidders.

5th.—The sale will become final on receipt by the Collector of the orders of the Commissioner confirming it, and a regular conveyance will then be granted to the purchaser.

Consecutive lot number.	Name of district	Pargana and mauza.	Number of mile on which land is situated.	Situated on which side of the railway.	Approximate area of lot in acres and decimals.	Land excluded from sale from each lot.		Commencement and termination of lot.	Boundary of lot.
						Reasons for exclusion.	Acres and decimals.		
1	2	3	4	5	6	7		8	9
						Lot No. 1.			
1	Murshidabad.	Pargana Kankjole, mauza Kanupara *alias* Chak Kanupara, J. L. No. 56(old)/52(new), thana Shamshergani, Kalupara according to new J. L. No. 52.	87-88	North side of the railway line.	Total area of 11·11 acres comprising the cadastral survey plot No. 44 with an area of 9·80 acres and plot No. 45 with an area of 1·31 acres in village Kanupara.	Nil	Nil	Commencing from chainage 218·150 and terminating in chainage 219·120.	North—By plot Nos. 17, 18 and 19 of village Kanupara *alias* Chak Kanupara, J.L No.56(old)/52(new). East—By railway relinquished land. South—By plot Nos. 46, 47, 48 and 50 of village Kanupara *alias* Chak Kanupara. West—By plot Nos. 19, 33, 34, 35, 36, 41, 42, 43 and 50 of village Kanupara *alias* Chak Kanupara.
						Lot. No. 2.			
2	Do. ..	Pargana Rukunpur (according to Government order No. 1717R., dated 9th July 1935, P. W.D. Railway Branch), village Ramrampur in mauza Kuli, J. L. No. 23 (old)/58 (new), thana Shamshergani, pargana Farukkabad according to jurisdiction list.	87-88	Ditto ..	Total area of 6·21 acres comprising cadastral survey plot— Nos. Acres. 932 with an are of 1·00 933 ,, ,, 0·45 934 ,, ,, 1·08 935 ,, ,, 2·50 949 ,, ,, 0·58 Total .. 6·21	Nil	Nil	Commencing from chainage 218·200 and terminating in chainage 218·070.	North—By plot Nos. 931 and 930 of mauza Kuli, J. L. No. 23 (old)/58 (new). East—By plot Nos. 929, 936, 942, 943, 944 and 930 of mauza Kuli. South—By plot Nos 950, 948, 945 and 944 of mauza Kuli. West—By railway relinquished land.

L. G. DURNO, Collector.

Berhampore, the 8th September 1936.

Advertisement of sale.

NOTICE is hereby given that the undermentioned plots of land, no longer required by Government, situated along the Eastern Bengal Railway in the district of Rajshahi will be put up to sale at 1 o'clock on the 10th November 1936 corresponding with the 24th Kartik, 1343 Fash, at Abdulpur Railway Station.

The purchasers of the several plots of land will be subject to the following conditions :—

1st. The purchasers will have no power to make any excavations on the land nearer than fifteen feet from the railway boundary or to plough the land nearer than three feet from the same.

2nd.—If the amount of purchase money does not exceed Rs. 100, the whole amount must be paid down at once.

3rd.—If the amount of purchase money exceeds Rs. 100, one fourth of the amount must be immediately deposited. If the balance be not paid by noon of the fifteenth day after the sale, reckoning the day of sale as one, or if that day be a close holiday, then by noon of the first succeeding office day, the sale shall be cancelled, the sum deposited being forfeited to Government and the lot again put up for sale at the risk of the defaulting purchaser, after issue of advertisement, as in the case of original sale.

4th. The plots of land will be sold subject to an annual assessment of Rs. 103-15 which will be subject to revision at the next general settlement of the temporarily-settled estates of the district to the highest bidders.

5th.—The sale will become final on receipt by the Collector of the orders of the Commissioner, Rajshahi Division, confirming it and a regular conveyance will then be granted to the purchaser.

Consecutive lot number.	Name of district.	Pargana and mauza.	Number of mile on which land is situated.	Situated on which side of the railway.	Approximate area of lot in acres and decimals	Land excluded from sale from each lot.		Commencement and termination of lot.	Boundary of lot.
						Reasons for exclusion.	Acres and decimals.		
1	2	3	4	5	6	7		8	9
1	Rajshahi ..	Pargana Laskarpur, mauza Sobh.	15	West side	3·50	..	..	..	North—By lands of temporarily-settled private estate No. 2496, mauza Sobh. East—By railway land. South—By the bund. West—By lands of Gada dhar Sarkar of Sobh, Mokshoda Dasya of Budrampur and Rameswar Sarkar of Agorepur.
2	Do. ..	Ditto ..	15	East side	5·17	..	..	..	North—By a road. East—By a Dahar and lands of Ali Pramanik, Dharjamoyee Dasya, Pulin Mandal and Dumil Pramanik of Sobh. South—By the bund. West—By the railway lands.
3	Do. ..	Pargana Laskarpur, mauzas Lakshanhati and Maria Araji, pargana Malanchi, mauza Ghoriash *alias* Khallaj	15	West side	7·45	..	..	..	North—By lands of mauzas Lakshanhati and Ghoriash. East—By railway lands. South—By lands of mauza Maria Araji. West—By lands of mauzas Maria Araji and Ghoriash.
4	Do. ..	Pargana Laskarpur, mauzas Lakshanhati and Muradpur	15	East side	38·06	..	..	..	North—By lands of Erfan Pramanik, Ali Pramanik, Shefat Pramanik and others and District Board Road. East—By a Dahar. South—By the river Baral. West—By the railway lands.
5	Do. ..	Pargana Laskarpur, mauza Muradpur.	15	Do. ..	15·09	..	..	..	North—By the lands of Esmail Mandal of Porabaria, Madhu Pramanik of Lakshanhati and others. East—By the lands of Kanto Mandal, Mirjan Mandal of Lakshanhati and others. South—By District Board Road. West—By a drain.

Rajshahi, the 5th September 1936.

B. K. Das, *for* Collector.

In the High Court of Judicature at Fort William in Bengal, in insolvency.

NOTICE is hereby given to the undersigned insolvents that owing to their not having applied for their discharge within eighteen months of the Order of Adjudication made against them, the Registrar-in-insolvency, High Court, Calcutta, has fixed Friday, the 20th day of November 1936, at eleven o'clock in the forenoon, for the hearing by him of the Official Assignee's application under section 41 of the Presidency Towns Insolvency Act, III of 1909, and Rule 142A made thereunder for Orders of Annulment of the respective Adjudication Orders. Insolvents desirous of having the hearing postponed must apply to the Registrar-in-insolvency and not to the undersigned:—

Adjudication Order.		Insolvents.
Nos.	Dates.	
2	10-1-1935	Albert Sibbritt.
8	1-2-1935	Harold Eugene Blake.
10	7-2-1935	William Maurice Harrington.
14	14-2-1935	Henry D. Chowdhury.
16	12-3-1935	Firm of Young Bengal Friends Society.
21	21-2-1935	George Frederick Kennewell Britland.
23	26-2-1935	Firm of Dharam Chand Dahani.
24	25-2-1935	Charles Cannobell.
123	12-7-1928	Madan Lal Misser.

G. M. FALKNER, Official Assignee.

Calcutta, the 19th September 1936.

(1945—1)

In the Court of the Sub-Judge, Asansol.

Section 19 of the Provincial Insolvency Act.

INSOLVENCY CASE No. 30 OF 1936.

Hari Charan Chatterjee of Asansol, petitioner.

TAKE notice that the insolvency petition filed by the aforesaid petitioner has been admitted and that the Court has fixed 2nd October 1936 for hearing thereof.

K. BANERJI, Sub-Judge.

Asansol, the 18th September 1936. (1935—1)

In the Court of the Sub-Judge, Asansol.

Section 19 of the Provincial Insolvency Act.

INSOLVENCY CASE No. 37 OF 1936.

Benarashi Lal Marwari of Asansol, petitioner.

TAKE notice that the insolvency petition filed by the aforesaid petitioner has been admitted and that the Court has fixed 9th October 1936 for hearing thereof.

K. BANERJI, Sub-Judge.

Asansol, the 18th September 1936. (1936—1)

In the Court of the Sub-Judge, Asansol.

Section 19 of the Provincial Insolvency Act.

INSOLVENCY CASE No. 38 OF 1936.

Baij Nath Marwari of Asansol, petitioner.

TAKE notice that the insolvency petition filed by the aforesaid petitioner has been admitted and that the Court has fixed 9th October 1936 for hearing thereof.

K. BANERJI, Sub-Judge.

Asansol, the 18th September 1936. (1937—1)

In the Court of the Sub-Judge, Asansol.

Section 19 of the Provincial Insolvency Act.

INSOLVENCY CASE No. 36 OF 1936.

Mahangu Khan of Asansol, petitioner.

TAKE notice that the insolvency petition filed by the aforesaid petitioner has been admitted and that the Court has fixed 9th October 1936 for hearing thereof.

K. BANERJI, Sub-Judge.

Asansol, the 18th September 1936. (1938—1)

In the Court of the Sub-Judge, Asansol.

Section 19(2) of the Provincial Insolvency Act.

INSOLVENCY CASE No. 35 OF 1936.

NOTICE is hereby given to his creditors that the insolvency petition filed by W. G. McNamara, Guard, E. I. Railway, Asansol, has been admitted and the 9th October 1936 has been fixed for hearing thereof.

K. BANERJI, Sub-Judge.

Asansol, the 18th September 1936. (1934—1)

NOTICE TO CREDITORS OF THE DATE OF HEARING OF AN INSOLVENCY PETITION.

Section 19 of the Provincial Insolvency Act, V of 1920.

In the Court of the District Judge at Chittagong.

INSOLVENCY APPLICATION No. 29 OF 1936.

WHEREAS debtor Lakshan Chandra Mazumdar, son of late Dhaniram Mazumdar, of Chikdair, police-station Raozan, district Chittagong, has applied to this Court by a petition, dated 12th day of August 1936, to be declared an insolvent under the Provincial Insolvency Act, V of 1920, this is to give notice that the Court has fixed the 8th day of October 1936 for the hearing of the aforesaid petition and the examination of the debtor.

H. G. WAIGHT, District Judge.

Chittagong, the 16th September 1936. (1920—1)

NOTICE TO CREDITORS OF THE DATE OF HEARING OF AN INSOLVENCY PETITION.

Section 19 of the Provincial Insolvency Act, V of 1920.

In the Court of the District Judge at Chittagong.

INSOLVENCY APPLICATION No. 33 OF 1936.

WHEREAS debtor Abdul Jabbar, son of Jamali, of Sanhara, police-station Patiya, post office Bhatikhain, district Chittagong, has applied to this Court by a petition, dated 27th day of August 1936, to be declared an insolvent under the Provincial Insolvency Act, V of 1920, this is to give notice that the Court has fixed the 10th day of October 1936 for the hearing of the aforesaid petition and the examination of the debtor.

H. G. WAIGHT, District Judge.

Chittagong, the 11th September 1936. (1921—1)

In the Court of the District Judge of Hooghly.

NOTICE is hereby given, under clause (2) of section 12 of the Provincial Insolvency Act, V of 1920, to his creditors that the discharge petition of Satish Chandra Ghose, son of late Panchcowri Ghose, of Bhadrakali, thana Uttarpara, district Hooghly, has been filed in this Court in Insolvency Case No. 3 of 1936, and that the 21st November 1936 has been fixed for the hearing thereof.

[ILLEGIBLE], Addl. District Judge.

Chinsura, the 15th September 1936. (1922—1)

In the Court of the District Judge of Hooghly.

INSOLVENCY PETITION No. 17 OF 1936.

NOTICE is hereby given that Baisnab Kar Thakur, son of Darsani Thakur, at present of Mill Bazar, Bansberia, thana Chinsura, district Hooghly, was on the 12th day of September 1936 adjudged an insolvent. The 11th day of December 1936 has been fixed for framing a schedule and creditors are required to prove their claims on that day.

[ILLEGIBLE], Addl. District Judge.

Chinsura, the 14th September 1936. (1923—1)

In the Court of the District Judge of Hooghly.

INSOLVENCY PETITION No. 35 OF 1936.

NOTICE is hereby given that Surendra Nath Khamaru, son of late Bhusan Chandra Khamaru, of Sargoria, thana Pandua, district Hooghly, was on the 11th day of September 1936 adjudged an insolvent. The 19th day of November 1936 has been fixed for framing a schedule and creditors are required to prove their claims on that day.

[ILLEGIBLE], Addl. District Judge.

Chinsura, the 12th September 1936. (1924—1)

In the Court of the District Judge of Hooghly.

NOTICE is hereby given, under clause (2) of section 12 of the Provincial Insolvency Act, V of 1920, to his creditors that the insolvency petition of Bhagban Khutia, son of late Sanker Khutia, of Rishra, thana Serampur, district Hooghly, has been admitted by this Court as No. 71 of 1936, and that the 21st November 1936 has been fixed for the hearing thereof.

[ILLEGIBLE], for District Judge.

Chinsura, the 17th September 1936. (1930—1)

In the Court of the Addl. District Judge of Hooghly at Howrah.

NOTICE is hereby given under the Provincial Insolvency Act, V of 1920, to his creditors that the insolvency petition of Krishnapada Kolley, son of late Ashutosh Kolley, of Alampur, thana Domejur, district Howrah, has been admitted by this Court as No. 116 of 1936 and that the 9th October 1936 has been fixed for the hearing thereof.

S. N. GUHA RAY, Addl. District Judge.

Howrah, the 18th September 1936. (1939—1)

In the Court of the District Judge of Mymensingh.

INSOLVENCY CASE No. 27 OF 1935.

ON the application of the insolvent Hurumuz Ali Bepari, son of late Abdul Rahman Bepari, of Sankanda Kotoarkanda, police-station Sherpur, district Mymensingh, for an order of the final discharge, the 3rd day of October 1936 has been fixed for hearing the aforesaid petition and the examination of the insolvent.

S. M. MASIH, District Judge.

Mymensingh, the 15th September 1936. (1918—1)

In the Court of the District Judge of 24-Parganas.

INSOLVENCY CASE No. 32 OF 1936.

Phani Bhusan Chatterjee, son of Babu Kalidas Chatterjee, of 68/1C, Anando Palit Road, police-station Entally, applicant.

To Kamal Krishna Sett of 38/3, Bosepara Lane, Baghbazar, and others, creditors.

ON the 10th day of September 1936 it was ordered that the matter of the petition of the applicant be heard on the 12th day of October 1936, and that the said applicant do attend to be examined by this Court on that date.

T. H. ELLIS, District Judge.

Alipore, the 14th September 1936. (1919—1)

MR. ARABINDA GUHA, M.A., B.L., desires to be enrolled as an Advocate, High Court.

(1928—4)

MR. SANTOSH K. DUTT, B.L., intends to be enrolled as an Advocate of the High Court.

(1943—4)

MR. DWIJENDRA KUMAR BOSE, B.L., intends to be enrolled as an Advocate of the High Court.

(1759—4)

MR. ROHINI KANTO GHOSE, M.A., B.L., intends to be enrolled as an Advocate of the High Court.

(1820—4)

WANTED a District Engineer for the district board of Faridpur on a monthly salary of Rs. 250 rising to Rs. 400 by an annual increment of Rs. 10 with an efficiency bar at Rs. 300 on confirmation after one year's approved service. None need apply who is not qualified under rule 2 of the rules published with Bengal Government notification No. 3334L.S.-G., dated the 20th December 1901, as amended subsequently. All applications should be addressed to the Chairman of this Board (not by name) in sealed and registered covers and superscribed "Application for appointment of District Engineer". Each application must be accompanied by all the necessary certificates and testimonials in original as required under the said rules with an envelope addressed and sufficiently stamped for registration for returning the same. The application should further state the name of the father of the applicant, native village and district and the present age and details of service if any.

All applications must reach this office by the 15th October 1936.

Applicants who are considered suitable may be required to interview the Chairman at their own expenses when asked to do so.

No joining travelling allowance will be paid by the Board.

I. B. SARKAR, 2nd Vice-Chairman,
Faridpur district board.

Faridpur, the 18th September 1936. (1929—3)

WANTED a District Engineer for the District Board of Malda on a monthly salary of Rs. 200—20-2—300 (efficiency bar) 20-2—400 on probation for one year to be confirmed on approved service. Candidates must be qualified under rule 2 of the Rules for the appointment of District Engineers corrected up to date and be a native of or have a permanent domicile in Bengal. Application should be addressed to the Chairman superscribed "application for appointment of District Engineer" and must reach the undersigned on or before 2nd November 1936. Please apply stating qualifications, present age and experiences with recent certificates of moral character and other credentials in original. Candidates with sufficient experience and superior qualification may be given higher starting in the scale at the discretion of the Board. Selected candidates may be required to appear before the Board at their own expenses.

A. CHOUDHURY, Chairman,

District Board, Malda.

Malda, the 19th September 1936. (1933—3)

APPLICATIONS are invited for the post of Professor of Pathology, Medical College, Calcutta, and Bacteriologist to the Government of Bengal.

2. Candidates should be British subjects and must have high academic qualification with considerable practical experience in Bacteriology and Parasitology in Morbid Anatomy and Histology and experience in teaching these subjects.

3. The appointment is open to men belonging to the medical profession in general including members of the Bengal Medical Service.

4. The rate of pay is as follows:—

Officers of the Bengal Medical Service - Rs. 550—75/2—1,000.

Direct recruits from the Medical profession—Rs. 650-50/2—750—75/2—1,200, their initial pay in the scale being fixed as follows according to their age on the date of assuming duties:—

Age.	Stage of time-scale.
36 and below ...	1
37 ...	2
38 ...	3
39 ...	4
40 ...	5
41 ...	6
42 ...	7
43 ...	8
44 ...	9
45 ...	10
46 ...	11
47 ...	12
48 ...	13
49 ...	14
50 ...	15
51 ...	16
52 and above ...	17

Note.—Increments will accrue on the anniversary of appointment.

5. In addition the post carries a bacteriological allowance of Rs. 200 per month. General private practice is not allowed.

6. The selected candidate will be on probation for two years.

7. If a medical man not in Government employ is selected:—

(*a*) His appointment will be on contract for five years renewable at the end of each quinquennium;

(*b*) The appointment may be terminated on six months' notice on either side; and

(*c*) The appointment will not be pensionable; but Contributory Provident Fund benefit will be allowed—Government contributing an anna in the rupee of his pay.

A B.M.S. officer, if selected, will continue in pensionable service.

8. Applications supported by evidence of the qualifications possessed and of age should reach the Surgeon-General with the Government of Bengal not later than 31st October 1936.

Canvassing will disqualify.

D. P. GOIL, Major-Genl., I.M.S.,

Surgn.-Genl. with the Govt. of Bengal.

Calcutta, the 17th September 1936.

Public Service Commission (India).

APPLICATIONS are invited for the post of Veterinary Research Officer in charge of the Protozoological Section at the Imperial Veterinary Research Institute, Muktesar. (1) Candidates must be statutory natives of India. They must not be less than 30 years of age and must possess the M.R.C.V.S. or an equivalent diploma. They should have an extensive knowledge of Histo-pathology and Haematology and experience in the investigation of protozoological conditions both in the laboratory and in the field. (2) Pay Rs. 275—300 (Probationary Period)—325-25-650 (Efficiency Bar)—35-1,000, plus special pay of Rs. 150 per month. Initial pay may be increased on the ground of age, qualifications or experience. (3) Unfurnished rent free quarters will be provided. (4) Government servants eligible if permitted to apply by their Departments. (5) Post permanent but terminable at any time for professional inefficiency. Probation two years. (6) Canvassing, in any form, will disqualify. (7) Last date for receipt of applications 27th October 1936. Prescribed application forms and further particulars may be obtained from the Secretary, Public Service Commission. Requisitions should be addressed to Simla, if they can reach there on or before the 6th October 1936, and thereafter to "Metcalfe House", Delhi. Applicants for forms must mention the name of the post.

Simla, the 17th September 1936.

(1944—1)

DACCA AGRICULTURAL SCHOOL.

Central Research Station, Ramna, Dacca.

THERE are vacancies for 35 students in the above school for the course commencing on January 15, 1937. The course extends over a period of two years. Applicants for admission must submit their applications on the prescribed form on or before the 15th November 1936 to the Head Master, Dacca Agricultural School, post office Tejgaon, Dacca, who will supply forms and prospectus governing admittance.

M. CARBERY, Assistant Director of

Agriculture, Bengal.

THE Bengal and Madras Service Family Pension Fund which is provisionally managed and assisted by Government has for its object the provision of monthly pensions for the maintenance of the widows and children of subscribers and is open, with certain exceptions, to all active and pensioned members of the Uncovenanted service of Government (except those serving under the Government of Bombay), and to Local Fund servants earning pensions from Government. Some of the special features of the fund are (1) that widowed daughters incapable of re-marriage or children labouring under such mental or bodily infirmities as incapacitate them from earning their livelihood or preclude the possibility of marriage (in case of a daughter) are admitted to its benefits; and (2) that subscribers to the Widows and Daughters' branches are entitled to a refund of 30 per cent. of the premia paid, should the nominee predecease them after five years of admission. The second quinquennial valuation of the Fund has been completed by the Actuary to the Government of India, and his report discloses very favourable results. For forms of application and rules of the Fund apply to the Accountant-General, Bengal, Imperial Secretariat Buildings, Calcutta.

Estate Miss Mary Aloysia Rostan, deceased.

PURSUANT to section 360 of Act XXXIX of 1925 and section 12 of Act XXVIII of 1866, the creditors and all persons interested in the estate of Mary Aloysia Rostan, late of St. Vincent's Home, 68, Diamond Harbour Road, Kidderpore, who died there on the 28th day of June 1936, and Probate of whose Will was granted by the High Court, Calcutta, on the 20th day of August 1936, are hereby required to submit particulars of their claims to the undersigned on or before the 25th day of October 1936, after which date the executrix will distribute the assets, having regard only to the claims of which notice shall then have been received.

ORR, DIGNAM & CO.,
Solicitors to the executrix.

32, Dalhousie Square, South, Calcutta 16th September 1936 (1915—1)

Lost.

THE Government Promissory Note No. 20030 of the 3½ per cent. loan of 1842-43 for Rs. 200, originally standing in the name of the Imperial Bank of India and last endorsed to Church Missionary Society, the proprietor, by whom it was never endorsed to any other person, having been lost, notice is hereby given that payment of the above note and the interest thereupon have been stopped at the Public Debt Office, Reserve Bank of India, Calcutta, and that application is about to be made for the issue of duplicate in favour of the proprietor. The public are cautioned against purchasing or otherwise dealing with the abovementioned security.

Signature of the advertiser—T. Lenman.

Residence—10, Mission Row, Calcutta.

(1914—3)

Note.

PORTIONS of the following note of the Calcutta Circle of Issue are stated to have been destroyed. Payment of its value has been claimed by the person whose name is placed against the number. Any other person claiming a right to it is warned to communicate at once with the undersigned:—

Regd. No.	Note No.	Value.	Name and address of the claimant.
W.D. 14-36	T/7, 452131	Rs. 100	Jagarnath Shaw, C/o Ram Babu's House, 42, Mannadil Chowk, Benares.

S. GUPTA, Currency Officer.

Reserve Bank of India, Issue Department, Calcutta, the 17th September 1936.

Lost.

THE Government Promissory Note No. 027301 of the 3½ per cent. loan of 1854-55 for Rs. 500, originally standing in the name of Hari Das Sreemaney and last endorsed to Brindaban Behari Bose (since deceased), the proprietor, by whom it was never endorsed to any other person, having been lost, notice is hereby given that payment of the above note and the interest thereupon have been stopped at the Public Debt Office, Reserve Bank of India, Calcutta, and that application is about to be made for the issue of duplicate in favour of Messrs. Tirtha Nath Bosu, Sachida Nanda Bosu, Achutyananda Basu and Umapati Basu. The public are cautioned against purchasing or otherwise dealing with the abovementioned security.

Signature of the advertiser—Tirtha Nath Bosu.

Residence Kaigram village and post, Burdwan district.

(1932—3)

Lost.

THE Government Promissory Notes Nos. 334432, 334433, 333268, 333672, 333496, 333497 of the 3½ per cent. loan of 1900-01 for Rs. 100, Rs. 100, Rs. 500, Rs. 1,000, Rs. 1,000, Rs. 1,000, respectively, originally standing in the name of Prosad Das Boral and Brothers, and last endorsed to Sm. Pateswari Debi, the proprietress, by whom they were never endorsed to any other person, having been lost, notice is hereby given that payment of the above notes and the interest thereupon have been stopped at the Public Debt Office, Reserve Bank of India, Calcutta, and that application is about to be made for the issue of duplicates in favour of the proprietress. The public are cautioned against purchasing or otherwise dealing with the abovementioned securities.

Name of the advertiser—Sm. Pateswari Debi.

Address—No. 15, Shibtollah Street, Uttarpara P.O., district Hooghly.

(1752—3)

Stolen.

THE undermentioned Government Promissory Notes,—

No.	Year of Loan.	Amount	Originally standing in the name of
		Rs.	
406674	3½ per cent., 1865	2,500	Prosad Das Boral and Brothers,
362435	Ditto ..	200	The Imperial Bank of India,
390569	3½ per cent., 1900-01.	500	Udoya Chunder Bose,
388930	Ditto ..	1,800	Bank of India, Ltd.,

and last endorsed to Mrs. Ramabai Palekar, the proprietress, by whom they were never endorsed to any other person, having been stolen, notice is hereby given that payment of the above notes and the interest thereupon have been stopped at the Public Debt Office, Reserve Bank of India, Calcutta, and that application is about to be made for the issue of duplicates in favour of the proprietress. The public are cautioned against purchasing or otherwise dealing with the abovementioned securities.

Name of the advertiser—Ramabai Palekar.

Residence—104, Bakul Bagan Road, Bhowanipore, Calcutta.

(1940—3)

Lost or Destroyed.

THE Government Promissory Notes :—

No.	Loan.	Amount.	Originally standing in the name of—	Last endorsed to—
		Rs.		
234939	3½ per cent., 1900-01.	500	The Bank of Bengal.	Rajendranauth Dey (since deceased).
256043	3½ per cent., 1865.	200	Do. ..	Do.
301560		1,000	Do. ..	Do.
296030	Do.	500	Rajendranauth Dey (since deceased).	None.

the proprietor, by whom they were never endorsed to any other person, having been lost or destroyed, notice is hereby given that payment of the above notes and the interest thereupon have been stopped at the Public Debt Office, Reserve Bank of India, Calcutta, and that application is about to be made for the issue of duplicates in favour of Sm. Hari Dassi Dassi. The public are cautioned against purchasing or otherwise dealing with the above-mentioned securities.

Name of the advertiser—Biswa Nath Bhattacharyya.
Address—16, Sarkar Lane, Calcutta.

(1870—3)

In the matter of the Indian Companies Act being Act VII of 1913,

and

In the matter of Watt Brothers and Company, Limited.

NOTICE is hereby given that a petition for the winding up of the abovenamed Company by the High Court of Judicature at Fort William in Bengal was on the 24th day of August 1936 presented to the said Court by Maharajadhiraja Sir Kameshwara Sing Bahadur of Darbhanga, a creditor of the said Company, and that the said petition is directed to be heard before the Court on the 9th day of November 1936; and any creditor or contributory of the said Company desirous of opposing an order for the winding up of the said Company under the above Act should appear at the time of hearing by himself or his attorney or advocate for that purpose; and a copy of the petition will be furnished to any creditor or contributory of the said Company requiring the same, by the undersigned, on payment of the prescribed charge for the same.

B. N. BASU & CO.,

Attorneys-at-Law and Attorneys for Maharajadhiraja Sir Kameshwara Sing Bahadur of Darbhanga, 6, Old Post Office Street, Calcutta.

Dated this 17th day of September 1936.

Note.—Rule 41 provides that any person who intends to appear on the hearing of the said petition must serve on or send by post to the abovenamed, notice in writing of his intention so to do. The notice must state the name and address of the person, or, if a firm, the name and address of the firm, and must be served, or if posted, must be sent by post in sufficient time to reach the abovenamed not later than two clear days before the 9th day of November 1936.

(1925—1)

In the matter of the Indian Companies Act, 1913

and

In the matter of the Tippera United Agency, Ltd. Maijkhar (Tippera).

AT an extraordinary general meeting of the abovenamed Company duly convened and held at Comilla on 16th August 1936 and confirmed on 31st August 1936, the resolution mentioned below was passed and confirmed as a special resolution:—

"Resolved that it has been proved to the satisfaction of this meeting that the Company cannot by reason of its liabilities continue its business and that it is advisable to wind up the same and accordingly that the Company be wound up voluntarily and that Maulvi Abdul Hamid of Comilla be and he is hereby appointed liquidator for the purpose of such winding up."

S. N. DAS GUPTA, Chairman.

Comilla, the 31st August 1936. (1917—1)

In the matter of the Indian Companies Act, VII of 1913, and

In the matter of the Union Tea and Trading Co., Ltd. (in voluntary liquidation).

NOTICE is hereby given that a special resolution has been passed on the 14th September 1936 by the shareholders of the Union Tea and Trading Co., Ltd., for voluntary winding up of the Company and that a meeting of the creditors of the Company will be held at 10, Canning Street, Calcutta, at 5 p.m., on the 7th October 1936.

D. CHAUDHURI, Liquidator.

10, Canning Street, Calcutta, the 18th September 1936. (1927—1)

In the matter of the Indian Companies Act, 1913

and

In the matter of The Dacca Industrial Mills, Ltd.

AT an extraordinary general meeting of the abovenamed Company duly convened, and held at Pangaon, Dacca, on the 31st day of August 1936, the following resolution, and at a subsequent extraordinary general meeting of the members of the said Company, also duly convened, and held at the same place on the 16th September 1936, the following resolution was duly confirmed as a special resolution, viz:—

"Whereas it is found expedient, at the present circumstances of the Company, to finally close up the business of the Company so it is resolved that The Dacca Industrial Mills, Ltd., be wound up voluntarily and that Babu Naresh Chandra Dutta of 34, Captain Bazar, Dacca, be appointed liquidator on a monthly remuneration of Rs. 25 only and that the said liquidator Babu Naresh Chandra Dutta, be authorised and be given all powers to liquidate the Company."

GOPAL CHANDRA ROY, Chairman.

Pangaon, p. o. Konda, Dacca, the 17th September 1936. (1941—1)

In the matter of the Indian Companies Act, 1913

and

In the matter of the Empire Flour Mills Company, Limited (in voluntary liquidation).

NOTICE is hereby given, pursuant to section 217 of the Indian Companies Act, 1913, that a general meeting of the abovenamed Company will be held at No. 103, Clive Street, Calcutta, on Tuesday, the 17th November 1936, at 12 noon, in order that there may be laid before the said Company an account showing the manner in which the winding up has been conducted and to hear any explanations that may be given by the liquidator.

H. C. W. BISHOP, Liquidator.

103, Clive Street, Calcutta, the 18th September 1936. (1942—1)

Imperial Library.

Secretariat Buildings, 6, Esplanade East, Calcutta.

Open on—

Week days and Saturdays from 10 a.m. to 7 p.m.
Sundays and Gazetted holidays from 2 p.m. to 5 p.m.

THE Imperial Library is also a Lending Library. It is free to all except children. There is no subscription to pay.

K. M. ASADULLAH, Librarian.

CINCHONA FACTORY PRODUCTS.

By order of the Government of Bengal Cinchona Factory Products as manufactured and packed at the Cinchona Factory, Mungpoo, Darjeeling district, will be sold and distributed by the Superintendent of the **Presidency Jail**, *in original packages* as received from the Mungpoo Factory, at the rates herein noted **from the 1st May 1926 :—**

Name of drug.	Price per lb. in powder form. Taken at a time. For 60 lbs. and upwards.	For 6 lbs. and over but less than 60 lbs.	For any quantity less than 6 lbs.	Price in 5 grain tablets. 1,000 tablets.	500 tablets.	250 tablets.	Price by weight per lb.
	Rs.	Rs.	Rs.	Rs.	Rs. a.	Rs. a.	Rs.
Quinine Bisulphate ..	18	19	20	16	8 0	4 4	..
„ Hydrobromide ..	23	24	25	20	10 0	5 4	..
„ Bihydrobromide ..	26	27	28	23	11 8	6 0	..
„ Salicylate ..	24	25	26	..	..	..	..
„ Tannate ..30 per cent. 35 per cent.	14	15	16	..	..	..	14

N.B.—Packing free in tins, sizes 1 lb., 8 oz. and 4 oz. only. Packing in bottles or smaller sizes of tins extra

Quinine Sulphate.

For 60 lbs. and upwards at a time .. Rs. 18 per lb.
For 6 lbs. and over but less than 60 lbs. at a time .. .. .. „ 19 „
For any quantity less than 6 lbs. .. „ 20 „

Totaquina.

Irrespective of quantity .. Rs. 13-8 per lb.
For sale to hospitals and dispensaries in Bengal, Bihar, Orissa and Assam.

Quinine Hydrochloride.

For 60 lbs. and upwards at a time .. Rs. 23 per lb.
For 6 lbs. and over but less than 60 lbs. at a time .. .. .. „ 24 „
For any quantity less than 6 lbs. .. „ 25 „

Quinine Di-Hydrochloride.

For 60 lbs. and upwards at a time .. Rs. 25 per lb.
For 6 lbs. and over but less than 60 lbs. at a time .. .. .. „ 26 „
For any quantity less than 6 lbs. .. „ 27 „

Quinidine Sulphate.

For 60 lbs. and upwards at a time .. Rs. 20 per lb.
For 6 lbs. and over but less than 60 lbs. at a time .. .. .. „ 21 „
For any quantity less than 6 lbs. .. „ 22 „

Cinchonidine Sulphate.

For 60 lbs. and upwards at a time .. Rs. 25 per lb.
For 6 lbs. and over but less than 60 lbs. at a time .. .. .. „ 26 „
For any quantity less than 6 lbs. .. „ 27 „

Cinchonine Sulphate.

For 60 lbs. and upwards at a time .. Rs. 12 per lb.
For 6 lbs. and over but less than 60 lbs. at a time .. .. .. „ 13 „
For any quantity less than 6 lbs. .. „ 14 „

*Cinchona Febrifuge (Powder).

For 60 lbs. and upwards at a time .. Rs. 9 per lb.
For 6 lbs. and over but less than 60 lbs. at a time .. .. .. „ 9 „
For any quantity less than 6 lbs. .. „ 10 „

*Cinchona Febrifuge (Tablets).

For 60 lbs. and upwards at a time .. Rs. 10 per lb.
For 6 lbs. and over but less than 60 lbs. at a time .. .. .. „ 10 „
For any quantity less than 6 lbs. .. „ 11 „

Supply of Cinchona Febrifuge to all authorised indentors will be rationed in the proportion of 1½ of Cinchona Febrifuge to 1 of Quinine Sulphate at their existing prescribed prices.

Cinchona Bark (in 50 pound original bags).

Per bag .. .. .. Rs. 25.

4 grains Quinine Tablets.

Rs. a.
2 8 per box of 200 tablets (for Bengal and other provinces).
12 1 per 5 boxes—(Transit charges inclusive) for Public in Bengal.
15 8 per lb.

5 grains Quinine Tablets.

Rs. a.
15 8 per lb. sold in 1 lb., ½ lb. and ¼ lb. tins.

5 grains Quinine Hydrochloride Tablets.

Rs. a.
20 0 per 1,000 tablets.
10 0 „ 500 „
5 4 „ 250 „

Packing free in tins, sizes 1 lb., 8 oz. and 4 oz. only. Packing in bottles or smaller sizes in tins extra.

5 grains Quinine Bihydrochloride Tablets.

Rs. a.
22 0 per 1,000 tablets.
11 0 „ 500 „
6 0 „ 250 „

Packing free in tins, sizes 1 lb., 8 oz. and 4 oz. only. Packing in bottles or smaller sizes in tins extra.

Transit charges extra in every case.

***Cinchona Febrifuge** is for sale to Government and Charitable Institutions, Local Bodies and Missionaries only. **It is not for sale to Private Firms or the General Public.**

Quinine Sulphate is now open for sale to the Public at the above rates. But it will be supplied to Hospitals and Dispensaries in Bengal, Bihar, Orissa and Assam at Rs. 18 per pound irrespective of quantities.

Five and ten boxes of Quinine Tablets are sold to the public at the concession rates which will be intimated on application.

Provinces other than Bengal, Bihar, Orissa and Assam will get their supplies of Sulph. Quinine and Cinchona Febrifuge Powder and Tablets from the Director, Botanical Survey of India, Sibpur, Howrah.

Local sale at the jail gate from 10 to 12 noon.

The system of payment is by—*Cash in advance*—by "*Treasury Challans*," which should accompany the order or indent.

In cases where this is not possible, payment should be made by "*Remittance Transfer Receipts*" or crossed "*Cheques.*"

Indents unaccompanied by cash in advance will be sent Value Payable Post. Credit sale is not allowed except under special circumstances.

In the case of *Government officers* payments will be recovered by *Book Transfer*, *i.e.*, *Countersigned Invoices*, in the event of *Cash* not accompanying the indent by "*Treasury Challans*," *Remittance Transfer Receipt or Cheque.*

2. Price and postage must accompany the price of the drug (when the drug is required by post).

The name of the Railway and Steamer Station or Post Office must be written distinctly when the parcels are required by Rail, Steamer or by Post. Railway parcels are sent by passenger train only.

A scale of postage is given below.

	¼ oz.	½ oz.	1 oz.	2 ozs.	4 ozs.	½ lb.	¾ lb.	1 lb.
	As.	As.	As.	As.	As.	As.	As.	Rs. A.
Quinine Sulph. ..	..	..	..	..	7	7	11	0 11
Cinchona Feb. ..	..	..	..	..	7	7	11	0 11
Cinchona Feb. Tablets	..	..	..	..	7	7	11	0 11
Quinine Hydrochlor. ..	5	5	5	5	7	7	..	0 11
Quinine Di-hydrochlor.	5	5	5	5	7	7	..	0 11
Quinine Tablets ..	..	..	..	..	7	7	11	0 11
Totaquina ..	..	..	..	..	7	7	11	0 11

	1¼ lb.	2 lb.	3 lb.	4 lb.	5 lb.	6 lb.
	Rs. A.	Rs. A.	Rs. A.	Rs. A.	Rs. A.	Rs. A.
Quinine Sulph. ..	0 15	1 3	1 7	1 15	2 7	2 11
Cinchona Feb. ..	0 15	0 15	1 7	1 11	2 3	2 7
Cinchona Feb. Tablets	0 15	1 3	1 11	1 15	2 7	2 15
Quinine Hydrochlor. ..	0 15	1 3	1 7	1 15	2 7	2 11
Quinine Di-hydrochlor.	0 15	0 15	1 7	1 11	2 3	2 7
Quinine Tablets ..	0 15	0 15	1 7	1 11	1 15	2 3
Totaquina ..	0 15	1 3	1 7	1 15	2 7	2 11

Two different drugs are not packed in the same parcel and postage must be paid separately for each kind.

N.B.—Postage stamps are not accepted as revenue.

Government reserve the right to alter the price without notice.

Government Publications for Sale

At the Bengal Government Press (Publication Branch)

Sales Office, Writers' Buildings, Calcutta.

Customers in the United Kingdom and the Continent of Europe may obtain the publications either direct from the High Commissioner's Office or through any book-seller.

NOTICE—Books required for private use can be purchased. Applications should be accompanied by remittance in each case.

All remittances on account of subscriptions to or enquiries regarding prices of Gazettes, Indian Law Reports or other Government publications available for sale should be addressed to the Superintendent, Government Printing, Bengal Government Press, Alipore. Advices of remittances should be sent to the same address.

Remittances on account of advertisements in official publications should be addressed to Accountant, Bengal Secretariat.

All remittances must include postal and packing charges which are shown in parentheses against each item in the list below.

All advertisements intended for publication in the *Calcutta Gazette* should be sent direct to the Superintendent, Government Printing, Bengal Government Press, Alipore, 24-Parganas.

Books required for the public service should be obtained through the Heads of Departments.

New Publications issued during the Current Quarter.

Legislative Council Proceedings.

For the meetings held on the 13th, 14th, 16th to 20th, 23rd to 27th and 30th March 1936. Vol. XLVIII, No. 2. Rs. 2-3 (11a.).

Acts.

Bengal Police Act (Bengal Act VII of 1869) as modified up to 1st May 1936. A. 1 (9p.).

Bengal Muhammadan Marriages and Divorces Registration Act (Bengal Act I of 1876) as modified up to 20th May 1935. In Urdu. As. 12 (1a.). In Bengali. As. 9 (1a).

Bengal Water Hyacinth Act (Bengal Act XIII of 1936). A. 1 (1a.).

Court-fees Act (Reprint of I. C. Act VII of 1870) as modified up to 15th April 1936. As. 2 (2a.).

Howrah Bridge Act (Bengal Act IV of 1926) as modified up to 1st May 1936. As. 2 (1a.).

Miscellaneous Publications.

Administration. Annual—Reports for Establishment, Buildings, Railways and Communications, 1934-35. As. 6 (1a.).

Agriculture. Annual Report of the Department of—, Bengal, 1934-35. Part I. As. 4 (2a.).

Botanic. Annual Report of Royal—Gardens and the Gardens in Calcutta and Darjeeling, 1935-36. A. 1 (1a.).

Bulletin. No. 47. Neem Oil and its Treatment in Soap-making. A. 1 (1a.).

No. 70. Utilisation of Waste Glass in the manufacture of Sodium Silicate, 1936. A. 1 (1a.).

No. 31. Manufacture of Washing Soap as a Cottage Industry. Third Edition, 1936. A. 1 (1a.).

Censors. Manual of the Bengal Board of—, 1936. As. 8 (2a.).

Cinematograph. Annual Report on the Working of—Act in Bengal, 1936. Re. 1-4 (1a.).

Civil List. Half-yearly—for Bengal, corrected up to 1st July 1936. Rs. 3 (13a.).

Crop. Season and—Report of Bengal, 1935-36. As. 4 (2a.).

Debtors. Bengal Agricultural—Rules, 1936. As. 8 (3a.).

Dispensaries. Triennial Report on the Working of Hospitals and—under the Government of Bengal, 1932-34. Rs. 2/6a.).

List of Hospitals—and other Medical Institutions in Bengal, corrected up to 31st December 1935. Rs. 2-2 (4a.).

District Boards. Resolution reviewing the Reports on the Working of—in Bengal, 1933-34. As. 3 (3a.).

Election (s). Rules under the Local Self-Government Act, corrected up to June 1936. A. 1 (1a.).

Bengal Electoral Conduct of—Rules, 1936. As. 4 (4a.).

Electricity. Annual Report on the Administration of—Act in Bengal, 1935. As. 8 (2a.).

Health. Bengal Public—Report, 1934. Re. 1 (6a.).

Reports of the—Departments of the Ports of Calcutta and Chittagong, 1935. As. 4 (1a.).

Jails. Annual Report on the Administration of—of Bengal Presidency, 1935. As. 12 (3a.).

Legislation. Effect of—List for 1935. A. 1 (1a.).

Loans. Bengal—Manual, 1918. Published 1936. As. 8 (3a.).

Medical. Annual Report of the—Schools in Bengal, 1934-35. Re. 1 (4a.).

Nursery and Plantation Notes for Bengal, 1933. Re. 1 (5a.).

Plantations. Notes on Thinning in—, 1936. As. 5 (2a.).

Police. Bengal—Training College Manual, 1936. As. 9 (3a.).

Registration. Statistical Returns with a Brief Note of the—Department in Bengal, 1935. As. 3 (2a.).

Schools. List of—in the Rajshahi Division corrected up to June 1935. As. 8 (2a.).

Smoke Nuisances. Thirtieth Annual Report of Bengal—Commission, 1935. A. 1 (1a.).

Stamp. Statistical Returns regarding Administration of—Department in Bengal, 1935-36. As. 3 (1a.).

Statistics. Agricultural—of Bengal, 1934-35. As. 6 (2a.).

Survey. Annual Report on the—and Settlement Operations in Bengal, 1934-35. Rs. 3 (5a.).

Veterinary. Annual Reports of the Civil—Department, Bengal, and of Bengal—College, 1934-35. As. 4 (2a.).

Workmen's. Annual Report on the Working of—Compensation Act in Bengal, 1935. As. 3 (1a.).

Publications issued between 1st January and 30th June 1936.

Legislative Council Proceedings.

For the meetings held on the 25th to 29th November, 2nd to 7th and 9th to 12th December 1935. Vol. XLVII, No. 1. Re. 1-14 (9a.).

For meetings held on the 13th, 14th and 16th to 20th December 1935. Vol. XLVII, No. 2. Re. 1-4 (7a.).

For the meetings held from 12th to 14th, 17th, 24th, 26th, 27th and 28th February and 2nd and 9th March 1936. Vol. XLVIII, No. 1. Re. 1-6 (7a.).

Acts.

Bengal Development Act (Bengal Act XVI of 1935). A. 1 (1a.).

Bengal Alluvial Lands Act (Bengal Act V of 1920) as modified up to 1st June 1935. A. 1 (1a.).

Bengal Village Self-Government Amendment Act (Bengal Act VIII of 1935), in Bengali. A. 1 (1a.).

Bengal Village Self-Government Temporary Provision Act (Bengal Act XX of 1935), in Bengali. A. 1 (1a.).

Bengal Land Registration Amendment Act (Bengal Act III of 1936). A. 1 (9p.).

Bengal Development Act (Bengal Act XVI of 1935), in Bengali. As. 4 (1a.).

Bengal Court of Wards Amendment Act (Bengal Act VI of 1936). A. 1 (9p.)

Bengal Alluvial and Diluvial Amendment Act (Bengal Act IX of 1936). A. 1 (9p.).

Bengal Wakf Amendment Act (Bengal Act IV of 1936), in Bengali. A. 1 (9p). In Urdu. A. 1 (9p.).

Bengal Village Self-Government Act (Bengal Act V of 1919) as modified up to 1st August 1935. As. 2 (2a.).

Bengal Agricultural Debtors' Act (Bengal Act VII of 1936), in Bengali. As. 4 (2a.).

Bengal Whipping Act (Bengal Act X of 1936). A. 1 (9p.).

Bengal Municipal Amendment Act (Bengal Act XI of 1936). A. 1 (9p.).

Bengal Agricultural Debtors' Act (Bengal Act VII of 1936). A. 1 (9p.).

Calcutta Suburban Police Act (Bengal Act II of 1866) as modified up to 1st June 1930. As. 8 (2a.).

Court-fees—Bengal Third Amendment Act (Bengal Act I of 1936). A. 1 (9p.).

Calcutta Municipal Second Amendment Act (Bengal Act II of 1936). A. 1 (1a.).

Calcutta Municipal Amendment Act (Bengal Act VIII of 1936). A. 1. (9p.).

Calcutta Municipal Second Amendment Act (Bengal Act XII of 1936). A. 1 (9p.).

Howrah Bridge Amendment Act (Bengal Act V of 1936). A. 1 (9p.).

Indian Stamp Act (Reprint of I. C. Act II of 1899) as modified up to 1st January 1936. As. 4 (3a.).

Miscellaneous Publications.

Accountantship. Examination papers for 1936. A. 1 (1a.).

Administration. Report on the—of Bengal, 1934-35. Re. 1-8 (7a.).

Advisory Committee. Final Report of the Provincial—on the Delimitation of Constituencies, 1935. As. 4 (2a.).

Agriculture. Annual Report of the Department of—, Bengal, 1934-35. Part II. Re. 1-4 (5a.).

Apprenticeship. Questions for the—Training Examination, 1936. As. 8 (1a.).

Audit. Annual Report on the working of Local—Department, 1933-34. As. 3 (2a.).

Budget. Civil -Estimate, 1936-37. Rs. 2 (11a.).

P. W. D. -Estimate of 60—Civil Works not charged to Revenue in Bengal, 1936-37. A. 1 (1a.).

P. W. D.—Estimate of Provincial Civil Works in Bengal, 1936-37. As. 4 (2a.).

Bulletin (Agriculture Department). No. 1 of 1921. A Brief History of Experimental Cotton Cultivation in the Plains of Bengal, 1935. As. 2 (1a.).

No. 2 of 1921. Historical Notes on Experiments with Jute in Bengal, 1935. As. 4 (1a.).

No. 66. Report on the Industrial Survey of the District of Pabna, 1934. As. 12 (2a.).

No. 63. Handbook of Tanning. Rs. 2-8 (7a.).

Chronological Tables, 1936. A. 1 (1a.).

Classified List and Distribution Return of Establishment of Roads and Buildings, corrected up to 1st January 1936. As. 9 (2a.).

Co-operative. Annual Report on the working of—Societies in Bengal, 1935. As. 10 (4a.).

Constables. Major Chamney's Manual for Instruction of—in their Duties, in Hindi. As. 12 (4a.).

Electoral. Bengal—Orders and Rules, 1936. As. 4 (4a.).

Electricity. Regulations under Rule 40A of the Indian—Rules, 1922. Published 1936. As. 4 (1a.).

Electrical Energy. Report of the Committee appointed to enquire into the charges for—levied by the Calcutta Electric Supply Corporation, Ltd., 1936. Rs. 2-8 (9a.).

Excise. Report on the Administration of—Department in Bengal, 1934-35. Re. 1-2 (3a.).

Factories. Abstract of the—Act, 1934, and Bengal—Rules, 1935. As. 2 (1a.).

Abstract of the—Act, 1934, and Bengal—Rules, 1935, in Bengali. As. 2 (1a.).

Abstract of the—Act, 1934, and Bengal—Rules, 1935, in Hindi. As. 2 (1a.). Nepali. As. 2 (1a.).

Cotton Ginning and Pressing—Rules, 1925. Published 1936. As. 4 (1a.).

Forest (s). Annual Progress Report on—Administration in Bengal, 1934-35. Re. 1 (4a.).

The—of Bengal, 1935. Rs. 3 (5a.).

High Court. Rules of the—Appellate Side, 7th edition, 1936. Re. 1-8 (7a.).

Rules from Civil Rules and Orders of—regarding the Service of Processes in Bengali, 1936. As. 4 (2a.).

Industries. Annual Administration Report of the Department of—, Bengal, 1934-35. As. 6 (3a.).

Irrigation Department. Classified List and Distribution Return of Establishment of the—, corrected up to 1st January 1936. As. 12 (2a.).

Justice. Report on the Administration of Civil—in Bengal, 1934. As. 15 (4a.).

Legislation. Effect of—List for 1934. A. 1 (2a.).

List of Members of the Bengal Legislative Council, etc., 24th list, dated the 16th January 1936. As. 5 (2a.)

Of members of the Bengal Legislative Council, etc., 25th list, dated the 25th April 1936. As. 5 (2a.).

Medical College. Annual Report on the Working of the—, Calcutta, 1934-35. As. 8 (1a.).

Physical Education. Suggestions for the Improvement of—in Schools, 1936. As. 5 (2a.).

Public Health. Annual Report of the Chief Engineer,—Department, Bengal, 1934. As. 8 (1a.).

Schools. Syllabuses of Studies for Secondary—for Boys and Girls in Bengal, 1936. As. 4 (2a.).

List of High—and Colleges in Bengal corrected up to 31st December 1935. As. 2 (2a.).

Steam-vessels. List of Inland—and Motor—plying in Bengal, Bihar and Orissa corrected up to 31st December 1935. Re. 1-3 (1a.).

Survey. Bengal—and Settlement Manual, 1935. Re. 1-2 (12a.).

Tenancy. Terms and conditions on which applications under section 158A of the Bengal—Act may be allowed by Government, 1935. A. 1 (1a.).

Tenderers. Instructions for the Guidance of—of Calcutta Police Uniform, 1936. Rs. 3 (2a.).

Tobacco. Bengal—(Sales Licensing) Rules, 1935. A. 1 (1a.).

Trade Union. Report on the working of the Indian—Act in Bengal for the year ending 31st March 1935 As. 8 (1a.).

Wards. Report on the Administration of the—, Attached and Trust Estates in Bengal, 1934-35. As. 11 (3a.).

Waste Lands. Bengal—Manual, 1936. Re. 1 (5a.).

Registered No. C207

The Calcutta Gazette

THURSDAY, SEPTEMBER 24, 1936.

PART VI

Bills introduced in the Council of State and Legislative Assembly, Reports of Select Committees presented to the Council and Assembly, and Bills published under Rule 18 of the Indian Legislative Rules.

GOVERNMENT OF INDIA.

Legislative Assembly Department.

The following Bill was introduced in the Legislative Assembly on the 31st August, 1936:—

L. A. BILL No. 32 OF 1936.

A Bill further to amend the General Clauses Act, 1897, for a certain purpose.

WHEREAS it is expedient further to amend the General Clauses Act, 1897, for the purpose hereinafter appearing; X of 1897.
It is hereby enacted as follows:—

Short title.

1. This Act may be called the General Clauses (Amendment) Act, 1936.

Insertion of new section 6A in Act X of 1897.

2. After section 6 of the General Clauses Act, 1897, X of 1897. the following section shall be inserted, namely:—

Repeal of Act making textual amendment in Act or Regulation.

"6A. Where any Act of the Governor General in Council or Regulation made after the commencement of this Act repeals any enactment by which the text of any Act of the Governor General in Council or Regulation was amended by the express omission, insertion or substitution of any matter, then, unless a different intention appears, the repeal shall not affect the continuance of any such amendment made by the enactment so repealed and in operation at the time of such repeal."

STATEMENT OF OBJECTS AND REASONS.

Doubt has sometimes been entertained in the past as to the effect of the repeal of an amending Act which has made textual alterations in a previous Act. The view which the Government of India favours is that an amending Act of this nature is spent once it has secured the inclusion in the text of the parent Act of the changes it was intended to bring about, and that the repeal of the amending Act thereafter does not affect the continuance of the amendments made by it. It has not, however, hitherto been the practice to repeal such Acts after their work is accomplished and the Statute-book is encumbered with much matter which could profitably be removed, but which it was undesirable to remove as long as any doubt concerning the effect of such removal could be entertained. The present amendment of the General Clauses Act, 1897, is aimed at establishing beyond doubt the view set forth above, and enabling a large number of Acts which were confined to making textual amendments in previous Acts to be repealed.

SIMLA;
The 16th June, 1936.

N. N. SIRCAR.

MD. RAFI,
Secy. to the Govt. of India.

Registered No. C207

No. 39 of 1936

The Calcutta Gazette

THURSDAY, SEPTEMBER 24, 1936.

CONTENTS:

	PAGE.		PAGE.
Statements under the Cotton Ginning and Pressing Factories Act, 1925 ..	1249	Weather and Crop Report for the week ending 16th September 1936 ..	1261—1264
Return of Vital Statistics for the month of January 1936	1250—1255	Area leased for irrigation up to end of July 1936	1266
Statements of weekly gauge-readings on certain rivers in Bengal	1256 & 1265	Vital Statistics of towns of Bengal for the week ending 12th September 1936 ..	1267
Price-list (retail) of Staple Food-Crops in the local areas of Bengal from April to June 1936	1257—1260	Resolution on the Reports of the Sanitary Board and of the Chief Engineer, Public Health Department, Bengal, for the year 1935	1268

SUPPLEMENT.

Official Papers.

FORM C—BENGAL.

STATEMENT OF COTTON PRESSED IN THE BENGAL PRESIDENCY FOR THE WEEK ENDING THE 11th SEPTEMBER 1936.

[Section 5(2) of the Cotton Ginning and Pressing Factories Act, 1925.]

Name of Division or block.	Number of bales pressed.				District included in the block.
	During the week.	During the corresponding week last year.	Since 1st September 1936 (the date prescribed by the Local Government as the commencement of the season).	During the corresponding period last year.	
The Bengal Presidency	35 bales of 400 lbs. each.	231	308	553	All districts in the Presidency.

J. B. McBRIDE,

Chief Inspector of Factories, Bengal.

Vital Statistics for the month of January 1936 of the

Districts.	No.	Towns.	Population under registration according to census of 1931.			Births registered.		Deaths							
			Male.	Female.	Total.	Number registered (excluding still-births).	Still-born number registered.	Cholera.	Small-pox.	Plague.	Malaria.	Enteric fever.	Measles.	Relapsing fever (Spirochætal).	Kala-azar.
Burdwan ..	1	Burdwan	23,485	16,133	39,618	60	..	..	..	..	6	..	..	..	1
	2	Raniganj	9,162	7,211	16,373	48	2	..	..	..	3	..	..	..	..
	3	Asansol ..	18,710	12,576	31,286	73	..	..	1	..	..	..	..	..	..
Birbhum ..	4	Suri ..	6,089	4,819	10,908	17	1	..	..	..	..	..	..	..	..
Bankura ..	5	Bankura ..	17,280	14,423	31,703	45	..	..	1	..	..	..	..	..	..
	6	Vishnupur	9,767	9,929	19,696	19	..	..	2	..	..	..	..	..	..
	7	Sonamukhi	5,337	5,652	10,989	27	..	1	..	..	1	..	..	..	..
Midnapur ..	8	Midnapur	17,807	14,214	32,021	68	..	..	120	..	..	..	..	..	..
	9	Ghatal ..	6,422	5,978	12,400	47	..	14	..	..	3	..	..	..	1
Hooghly ..	10	Hooghly-Chinsura.	18,799	13,835	32,634	109	1	..	11	..	..	1	..	..	..
	11	Bansberia	9,797	4,424	14,221	14	..	..	1	..	8	..	..	..	..
	12	Serampur	23,985	15,071	39,056	71	..	5	11	..	1	1	..	..	1
	13	Rishra-Konnagar.	17,528	9,340	26,868	43	..	1	14	..	..	..	..	..	..
	14	Baidyabati	10,369	8,117	18,486	42	1	2	1	..	1	..	..	..	..
	15	Bhadreswar	14,038	8,054	22,092	37	2	..	7	..	..	.	.	..	..
	16	Champdani	17,497	7,868	25,365	58	..	3	..	..	1	..	..	..	..
Howrah ..	17	Howrah ..	145,120	79,753	224,873	5.0	22	19	181	..	2	7	2	..	1
	18	Bally ..	20,944	9,403	30,347	40	..	3	1	..	..	..	..	..	..
24-Parganas ..	19	South Suburban.	22,183	17,316	39,199	96	2	2	..	..	..	1	..	..	..
	20	Tollygunj	14,800	9,676	24,476	60	..	..	1	..	..	1	..	..	..
	21	Garden Reach.	36,131	19,741	55,872	154	..	3	..	..	10	3	..	..	..
	22	Budge-Budge.	15,511	8,669	24,183	33	..	8	1	..	..	..	..	..	..
	23	Baranagar	23,116	13,934	37,050	81	2	2	5	..	1	1	..	..	..
	24	Kamarhati	20,107	10,247	30,354	54	..	3	..	..	..	1	..	..	..
	25	Rajpur ..	5,788	5,645	11,433	27	..	..	..	..	..	..	..	..	..
	26	South Dum Dum.	11,983	6,488	18,471	30	..	..	..	..	..	2	..	..	.
	27	Barrackpur	16,320	9,075	25,395	17	1	..	8	..	..	..	..	..	..
	28	Panihati	6,738	4,961	11,699	11	..	..	2	..	..	..	..	..	..
	29	North Barrackpur.	9,751	6,507	16,258	42	1	1	..	..	1	1	..	..	..
	30	Titagarh	31,252	15,332	46,584	51	5	..	71	..	..	..	..	..	..
	31	Garulia ..	9,282	4,751	14,033	22	..	..	1	..	..	1	..	..	..
	32	Naihati ..	20,123	10,785	30,908	38	1	1	2	..	..	..	..	..	..
	33	Halisahar	12,188	4,582	16,770	21	..	..	4	..	1	..	..	..	..
	34	Kanchrapara.	10,113	4,892	15,005	33	2	..	1	..	..	..	..	..	..
	35	Bhatpara	60,134	24,841	84,975	151	3	..	23	..	3	..	4	..	..
	36	Basirhat ..	11,106	10,181	21,287	58	..	31	..	..	0	..	..	..	1
	37	Baduria ..	7,169	6,508	13,677	21	..	16	..	..	1	..	..	..	..
Calcutta ..	38	Calcutta ..	778,817	362,045	1,140,862	2,787	177	74	315	..	53	37	22	..	12
Nadia ..	39	Krishnagar	12,807	11,477	24,284	48	..	..	2	..	..	..	..	..	..
	40	Nabadwip	8,912	9,949	18,861	51	1	3	1	..	..	..	..	..	..
	41	Ranaghat	6,334	5,061	11,395	14	..	..	..	..	..	..	..	..	..
	42	Santipur	12,016	12,976	24,992	07	3	..	..	..	1	..	..	..	..

towns with a population of 10,000 and over in Bengal.

registered.

Influenza.	Other fevers.	Dysentery.	Diarrhœa.	Pneumonia.	Pulmonary tuberculosis.	Other respiratory diseases.	Injuries including suicide.	Deaths from childbirth.	Other causes.	Total of all causes. Male.	Female.	Total.	Total of corresponding month of previous year. Male.	Female.	Total.	No.	Towns.
..	..	1	..	8	1	4	1	..	18	29	11	40	38	24	62	1	Burdwan.
..	..	1	1	..	3	3	2	1	11	15	10	25	13	13	26	2	Raniganj.
..	11	1	..	7	1	3	6	..	19	29	20	49	28	22	50	3	Asansol.
..	..	..	1	2	..	1	..	..	4	7	1	8	9	10	19	4	Suri.
..	1	1	..	..	..	1	2	1	16	14	9	23	15	12	27	5	Bankura.
..	2	3	..	..	..	2	5	2	11	16	11	27	11	9	20	6	Vishnupur.
..	4	..	1	3	..	3	..	..	7	12	8	20	10	10	20	7	Sonamukhi.
..	3	3	2	5	1	..	..	..	12	72	74	146	30	23	53	8	Midnapur.
..	6	..	4	3	..	1	..	1	5	22	16	38	11	20	31	9	Ghatal.
..	9	..	..	8	..	..	3	2	30	48	21	69	38	21	59	10	Hooghly-Chinsura.
..	..	..	2	..	1	..	..	..	3	13	2	15	5	4	9	11	Bansberia.
..	10	3	10	7	4	2	1	1	16	39	35	74	21	17	38	12	Serampur.
..	13	..	3	1	1	2	..		18	28	23	51	10	17	27	13	Rishra-Konnagar
..	5	..	3	5	..	6	1	..	20	25	19	44	15	13	28	14	Baidyabati.
..	1	3	2	4	..	2	1	..	8	22	8	30	6	15	21	15	Bhadreswar.
..	1	1	2	6	1	2	..	..	11	18	13	31	14	16	30	16	Champdani.
..	3	62	38	90	33	118	11	1	190	457	304	761	360	312	672	17	Howrah.
..	2	1	1	10	3	1	1	1	6	16	14	30	22	9	31	18	Bally.
..	3	3	1	5	..	9	2	1	11	28	15	38	39	32	71	19	South Suburban.
..	3	..	..	3	..	2	..	..	1	6	5	11	8	8	16	20	Tollygunj.
.	2	..	1	2	1	5	1	1	16	25	25	50	..	..	..	21	Garden Reach.
..	5	11	2	7	1	3	1	1	8	30	18	48	18	10	28	22	Budge-Budge.
..	6	9	3	5	4	11	..	1	24	35	37	72	38	39	77	23	Baranagar.
..	6	3	1	3	2	1	..	..	11	21	13	34	19	14	33	24	Kamarhati.
.	3	2	..	2	..	.	..	..	6	11	8	19	15	9	24	25	Rajpur.
..	2	..	..	1	1	1	..	1	10	6	13	21	10	15	25	26	South Dum Dum.
..	2	2	1	5	..	2	..	1	3	15	9	24	6	12	18	27	Barrackpur.
..	..	.	1	1	..	1	..	..	7	10	2	12	8	8	16	28	Panihati.
..	..	1	1	3	..	1	..	..	11	3	17	20	8	10	18	29	North Barrackpur.
..	114	..	1	..	..	..	..	1	5	99	93	192	20	21	41	30	Titagarh.
..	1	1	..	2	..	1	1	..	5	8	5	13	3	5	8	31	Garulia.
..	8	2	2	7	1	1	..	..	17	22	19	41	11	17	28	32	Naihati.
..	2	..	..	3	..	..	..	..	4	8	6	14	6	1	7	33	Halisahar.
..	8	1	..	..	1	1	..	..	2	8	9	17	6	5	11	34	Kanchrapara
2	14	5	6	7	1	6	1	2	19	73	48	121	43	41	84	35	Bhatpara.
..	2	7	3	11	..	1	1	..	10	37	36	73	25	16	41	36	Basirhat
..	11	2	..	10	..	1	..	1	1	20	17	40	10	8	18	37	Baduria.
152	109	100	28	293	208	161	62	11	1,185	1,784	1,321	3,105	1,844	1,579	3,423	38	Calcutta.
..	5	..	..	..	3	..	..	..	11	16	6	24	4	6	10	39	Krishnagar.
..	31	7	2	9	..	2	1	..	13	37	36	63	17	36	53	40	Nabadwip
..	..	..	..	1	..	..	..	..	1	1	1	2	5	2	7	41	Ranaghat.
..	7	1	2	3	1	2	1	..	14	19	13	32	22	26	48	42	Santipur.

Vital Statistics for the month of January 1936 of the

Districts.	No.	Towns.	Population under registration according to census of 1931.			Births registered.		Deaths							
			Male.	Female.	Total.	Number registered (excluding stillbirths).	Stillborn number registered.	Cholera.	Small-pox.	Plague.	Malaria.	Enteric fever.	Measles.	Relapsing fever (Spirochætal).	Kala-azar.
Murshidabad	43	Berhampur	15,166	12,237	27,403	46	1	..	14	..	..	..	1	..	..
	44	Jiaganj-Azimganj.	5,774	5,224	10,998	14	1	..	2	..	..	..	..	..	..
	45	Kandi ..	6,403	6,213	12,616	31	..	..	..	..	..	..	..	..	..
	46	Jangipur	6,283	6,513	12,796	41	..	..	8	..	..	..	..	..	..
Jessore ..	47	Jessore ..	7,084	4,272	11,356	10	..	..	..	..	9	1	..	..	1
Khulna ..	48	Khulna ..	11,968	7,152	19,120	9	..	2	..	..	..	2	..	..	1
	49	Satkhira ..	6,071	5,170	11,241	34	1	4	1	..	..	..	..	..	..
Rajshahi ..	50	Rajshahi	15,178	11,886	27,064	101	2	..	..	..	1	..	..	..	1
Dinajpur ..	51	Dinajpur	11,763	7,393	19,156	26	..	..	1	..	..	..	..	..	4
Jalpaiguri ..	52	Jalpaiguri	11,995	6,967	18,962	31	..	..	..	..	6	1	..	..	1
Darjeeling..	53	Darjeeling	12,101	9,084	21,185	1	4	..	..	..	2	1	..	..	..
Rangpur ..	54	Rangpur	12,808	7,941	20,749	24	3	..	..	..	4	3	..	..	1
Bogra ..	55	Bogra ..	8,678	6,141	14,819	40	2	..	..	..	1	1	..	..	..
Pabna ..	56	Pabna ..	11,970	9,934	21,904	28	..	..	..	..	3	..	..	..	..
	57	Sirajganj	17,981	14,486	32,467	55	..	..	..	..	16	..	..	..	1
Malda ..	58	English Bazar.	9,887	7,520	16,907	3	1	..	..	..	2	..	..	..	..
	59	Nawabganj	7,497	8,329	15,826	74	1	..	..	..	..	..	..	..	2
Dacca ..	60	Dacca ..	79,365	59,153	138,518	514	24	4	82	..	3	3	3	..	9
	61	Narayanganj	21,526	12,663	34,189	131	2	17	13	..	..	..	..	..	..
Mymensingh	62	Mymensingh	19,733	10,747	30,480	42	1	..	..	..	3	..	..	..	1
	63	Netrakona	6,848	4,132	10,980	33	..	..	..	..	..	..	..	..	..
	64	Jamalpur	12,629	10,448	23,077	63	4	..	..	..	2	..	..	..	1
	65	Sherpur ..	10,545	9,002	19,547	87	5	..	..	..	..	1	..	..	1
	66	Kishorganj	8,624	6,813	15,437	28	1	..	..	..	..	..	..	..	..
	67	Bajitpur ..	5,632	6,018	11,650	30	1	..	..	..	..	..	..	..	2
	68	Tangail ..	8,739	7,343	16,082	31	..	..	..	..	..	..	..	..	..
Faridpur ..	69	Faridpur	9,427	6,089	15,516	23	..	..	..	..	19	..	..	..	..
	70	Madaripur	15,204	11,690	26,894	34	..	2	..	..	..	..	..	..	..
Bakarganj ..	71	Barisal ..	23,588	12,128	35,716	74	3	1	..	..	1	..	..	..	1
	72	Pirojpur ..	6,062	4,897	10,959	35	1	..	..	..	..	..	..	..	..
Chittagong	73	Chittagong	35,049	18,107	53,156	128	10	..	1	..	..	8	..	..	2
Noakhali ..	74	Noakhali	7,808	5,255	13,063	24	..	1	..	..	..	..	..	..	2
Tippera ..	75	Comilla ..	18,530	12,835	31,365	35	1	..	..	..	1	1	..	..	1
	76	Brahmanbaria.	13,973	12,689	26,662	121	4	4	..	..	..	..	4	..	..
	77	Chandpur	11,443	5,395	16,838	0	2	1	1	..	..	..	..	..	..
		Total of month.	2,051,552	1,194,305	3,245,857	7,596	302	228	914	..	170	79	36	..	49
		Total of corresponding month of previous year ..	..	..	..	6,432	314	177	85	..	206	81	12	..	45
		Increase + or decrease —	..	..	..	+1,164	−12	+51	+829	..	−30	−2	+24	..	+4

Remarks.—1. The above table is compiled from returns collected by the municipalities and submitted to the Director of Public Health by the approximate to the actual in a proportion of cases and in a few instances are obviously incomplete.

2. The vital statistics of municipalities with a population of less than 10,000 have been excluded from this statement and 1918.

3. The birth and death ratios per mille per annum have been omitted from this statement according to Government of India,

Calcutta, the 12th September 1936.

towns with a population of 10,000 and over in Bengal.

registered.

Influenza.	Other fevers.	Dysentery.	Diarrhœa.	Pneumonia.	Pulmonary tuberculosis.	Other respiratory diseases.	Injuries including suicide.	Deaths from child-birth.	Other causes.	Total of all causes. Male.	Female.	Total.	Total of corresponding month of previous year. Male.	Female.	Total.	No.	Towns.
..	18	2	..	3	1	1	..	..	7	20	18	47	37	19	56	43	Berhampur.
..	..	..	..	1	..	..	..	..	9	3	5	8	7	10	17	44	Jiaganj-Azimganj.
..	..	1	..	..	..	..	1	..	10	8	4	12	2	2	4	45	Kandi.
..	4	..	..	..	..	1	..	..	..	6	7	13	5	7	12	46	Jangipur.
..	..	..	..	3	..	1	1	..	5	13	8	21	14	9	23	47	Jessore.
..	5	3	..	1	..	..	3	..	2	12	6	18	12	5	17	48	Khulna.
..	6	..	..	7	1	1	1	..	5	12	14	26	10	14	24	49	Satkhira.
..	8	1	1	5	..	..	1	1	22	38	13	41	29	30	59	50	Rajshahi.
..	1	5	..	6	..	1	..	2	11	23	11	34	1	..	1	51	Dinajpur.
..	..	1	..	4	3	7	..	..	6	26	6	32	17	11	28	52	Jalpaiguri.
..	16	..	4	10	..	..	1	1	24	34	25	59	21	10	61	53	Darjeeling.
..	5	1	..	2	1	1	..	2	13	18	15	33	14	9	23	54	Rangpur.
..	1	1	..	2	..	..	..	..	6	8	4	12	13	6	19	55	Bogra.
..	2	1		2	1	3	..	1	11	13	17	30	9	7	16	56	Pabna.
..	7	1		1	..	1	1	..	15	21	23	44	38	30	68	57	Sirajganj.
..	..	..	1	1	..	1	1	1	3	5	5	10	11	9	20	58	English Bazar.
..	4	..	..	1	1	1	..	2	9	10	10	20	11	15	26	59	Nawabganj.
..	..	16	11	51	7	63	6	2	119	213	166	379	116	155	301	60	Dacca.
..	20	7	1	2	4	1	3	..	44	61	52	116	42	24	66	61	Narayanganj.
..	21	..	..	4	3	..	2	1	14	33	12	45	18	14	32	62	Mymensingh.
..	3	..	..	..	..	1	1	1	7	9	7	16	6	4	10	63	Netrakona.
..	12	1	..	2	..	..	..	3	8	9	20	29	16	12	28	64	Jamalpur.
..	11	1	3	1	..	2	..	4	29	22	22	44	19	19	38	65	Sherpur.
..	8	..	2	..	1	1	..	2	8	7	15	22	12	8	20	66	Kishorganj.
..	3	1	1	..	..	..	..	1	3	6	4	10	5	4	9	67	Bajitpur.
..	1	..	..	2	1	..	..	2	12	9	9	18	10	6	16	68	Tangail.
..	1	..	..	2	..	1	..	2	3	13	16	29	12	10	22	69	Faridpur.
..	9	1	..	..	1	1	..	..	11	17	8	25	10	7	17	70	Madaripur.
..	4	3	..	7	..	5	3	..	11	27	11	41	24	21	45	71	Barisal.
..	4	1	..	1	..	..	..	1	7	6	8	14	8	11	19	72	Pirojpur.
..	17	4	1	..	1	2	2	1	22	28	33	61	40	27	67	73	Chittagong.
..	5	1	..	..	..	..	1	..	11	15	6	21	5	4	9	74	Noakhali.
..	3	..	..	1	1	..	..	1	7	12	4	16	16	12	28	75	Comilla.
..	13	3	1	4	1	3	..	2	31	31	30	61	34	36	70	76	Brahmanbaria.
..	2	..	..	4	..	..	1	..	2	1	3	4	12	3	15	77	Chandpur.
130	660	297	155	670	301	770	136	68	2,218	3,993	2,894	6,887	..	..	..		
194	625	310	312	596	334	818	133	57	2,697	3,542	3,097	6,639	..	..	..		
−64	+35	−13	−57	+74	−30	−78	+3	+11	−381	+451	−103	+348	..	..	..		

District Health Officers. Taken as a whole, the statement possesses a relative value, although the figures for individual town probably only incorporated in the returns for districts as ordered in Government of Bengal, Municipal Department, letter No. 118 San., dated the 8th February Education Department, letter No. 93 dated the 26th March 1918.

A. C. CHATTERJI, M.B., D.P.H., MAJOR, I.M.S., *Director of Public Health, Bengal.*

Vital Statistics for the month of January 1936 of the district

Division.	No.	Districts.	Population under registration according to census of 1931.			Births Registered.		Deaths							
			Male.	Female.	Total.	Number registered (excluding still-births).	Still-born number registered.	Cholera.	Small-pox.	Plague.	Malaria.	Enteric fever.	Measles.	Relapsing fever (Spirochætal).	Kala-azar.
Burdwan	1	Burdwan	763,534	724,888	1,488,422	3,428	57	15	10	..	726	10	..	..	8
	2	Birbhum	466,598	470,048	936,646	3,129	95	27	30	..	555	13	8	..	1
	3	Bankura	524,690	524,643	1,049,333	2,742	20	3	5	..	382	13	4	..	1
	4	Midnapur	1,392,796	1,361,876	2,754,672	7,517	214	335	110	..	1,585	37	8	..	8
	5	Hooghly	479,217	455,416	934,633	3,275	43	50	132	..	562	30	2	..	10
	6	Howrah ..	433,011	410,636	843,647	2,269	26	131	48	..	109	3	2	..	2
Presidency	7	24-Parganas	1,154,286	1,074,531	2,228,817	6,256	88	993	59	..	467	7	7	..	54
	8	Nadia ..	720,894	678,608	1,399,502	5,455	153	11	20	..	2,196	14	5	..	22
	9	Murshidabad.	649,857	657,007	1,306,864	5,458	142	23	390	..	894	15	3	..	29
	10	Jessore	864,362	795,446	1,659,808	4,402	174	318	6	..	2,839	28	1	..	20
	11	Khulna ..	833,612	762,175	1,595,787	5,049	217	212	5	..	1,121	32	..	..	14
Rajshahi	12	Rajshahi	726,117	675,837	1,401,954	5,435	317	81	..	..	2,420	1	13	..	22
	13	Dinajpur	912,329	823,947	1,736,276	5,672	563	16	56	..	2,184	21	40	..	232
	14	Jalpaiguri	521,824	442,571	964,395	3,141	162	..	1	..	671	4	2	..	14
	15	Darjeeling	158,030	140,420	298,450	1,018	61	..	2	..	202	..	..	3	9
	16	Rangpur	1,348,786	1,230,250	2,574,036	9,737	803	57	12	..	2,881	17	23	..	292
	17	Bogra ..	548,496	523,104	1,071,600	3,393	198	15	2	..	1,022	6	6	..	35
	18	Pabna ..	709,076	682,207	1,391,283	4,283	328	47	21	..	1,577	29	2	..	23
	19	Malda ..	510,421	510,612	1,021,033	3,322	25	173	49	..	960	2	..	..	45
Dacca ..	20	Dacca ..	1,642,626	1,617,244	3,259,870	11,436	496	551	254	..	1,112	29	26	..	112
	21	Mymensingh	2,594,444	2,408,565	5,003,009	16,746	961	94	48	..	2,606	26	29	..	82
	22	Faridpur	1,181,717	1,138,088	2,319,805	7,460	308	295	50	..	1,054	19	19	6	49
	23	Bakarganj	1,475,688	1,416,687	2,892,375	8,454	253	641	7	..	1,446	73	10	..	220
Chittagong	24	Chittagong	837,830	906,043	1,743,882	5,257	407	14	58	..	666	66	37	..	138
	25	Noakhali	851,010	842,646	1,693,656	6,439	385	134	55	..	401	36	9	..	153
	26	Tippera ..	1,551,094	1,483,176	3,034,270	11,277	776	320	12	..	760	23	24	..	205
	27	Chittagong Hill Tracts.													Not
		Total of month for Bengal.	23,875,876	22,779,347	46,655,223	152,050	7,267	4,565	1,442	..	32,208	563	280	9	1,795
		Total of corresponding month of previous year.	..	..	..	141,112	6,422	5 608	242	..	31,104	584	299	27	1,375
		Increase+ or decrease—.	..	..	..	+10,938	+845	−1,043	+1200	..	+1,104	21	−19	−18	+420

Remarks.—1. The above table is compiled from returns collected by the Subdivisional Officers and submitted to the Director of individual district probably only approximate to the actual.

2. The vital statistics of municipalities with a population of less than 10,000 have been included in this statement with

3. Divisional totals and the birth and death ratios per mille per annum have been omitted from this statement according to

Calcutta, the 12th September 1936.

excluding towns with a population of 10,000 and over in Bengal.

registered.

Influenza.	Other fevers.	Dysentery.	Diarrhœa.	Pneumonia.	Pulmonary tuberculosis.	Other respiratory diseases.	Injuries including suicide.	Deaths from child-birth.	Other causes.	Total of all causes.			Total of corresponding month of previous year.			No.	Districts.
										Male.	Female.	Total.	Male.	Female.	Total.		
4	623	35	62	158	45	52	28	19	418	1,213	1,000	2,213	1,378	1,352	2,730	1	Burdwan.
2	579	21	9	43	20	65	16	20	237	840	806	1,646	1,133	1,190	2,323	2	Birbhum.
7	560	27	84	131	42	60	19	15	395	874	874	1,748	1,143	1,141	2,284	3	Bankura.
5	1,557	188	256	463	60	104	54	67	1,285	3,089	3,033	6,122	2,586	2,494	5,080	4	Midnapur.
9	278	41	137	318	48	75	26	33	378	1,106	1,032	2,138	962	896	1,858	5	Hooghly.
2	253	33	192	81	48	73	33	15	262	661	626	1,287	743	702	1,445	6	Howrah.
9	1,908	92	123	314	65	79	72	34	805	2,692	2,396	5,088	2,014	1,845	3,859	7	24-Parganas
	431	12	16	215	39	37	51	48	517	1,963	1,676	3,639	1,764	1,598	3,362	8	Nadia.
	480	11	14	42	19	20	25	24	462	1,286	1,177	2,463	1,459	1,263	2,722	9	Murshidabad.
	605	20	13	167	47	56	43	45	423	2,420	2,214	4,634	1,855	1,804	3,659	10	Jessore.
..	678	30	44	98	28	31	41	41	848	1,694	1,529	3,223	1,434	1,350	2,784	11	Khulna.
18	440	11	23	121	24	24	41	66	579	2,034	1,850	3,884	1,894	1,876	3,770	12	Rajshahi.
17	1,166	41	52	296	62	87	37	132	303	2,438	2,304	4,742	1,949	1,806	3,755	13	Dinajpur.
12	699	40	51	383	36	96	21	58	237	1,273	1,052	2,325	1,096	959	2,055	14	Jalpaiguri.
10	280	17	14	40	31	10	1	4	121	397	347	744	339	338	677	15	Darjeeling.
4	2,038	41	73	182	65	83	20	103	403	3,236	3,118	6,354	3,114	2,843	5,957	16	Rangpur
6	453	4	8	70	22	28	18	38	258	1,073	918	1,991	1,181	1,092	2,273	17	Bogra.
3	811	19	17	133	26	31	23	52	399	1,593	1,620	3,213	1,529	1,468	2,997	18	Pabna.
1	215	8	7	15	6	10	18	16	185	915	795	1,710	1,148	1,103	2,251	19	Malda.
2	2,244	235	88	124	80	171	43	146	1,611	3,443	3,385	6,828	2,594	2,459	5,053	20	Dacca.
5	3,737	64	90	122	134	163	82	179	1,912	4,815	4,558	9,373	4,714	4,658	9,372	21	Mymensingh.
5	1,569	138	81	199	37	126	37	58	865	2,788	2,719	5,507	2,608	2,593	5,201	22	Faridpur.
10	2,090	270	120	356	44	379	38	52	1,016	3,385	3,387	6,772	3,472	3,210	6,682	23	Bakarganj.
18	2,038	44	48	143	20	43	31	66	296	2,248	2,073	4,321	1,985	1,637	3,622	24	Chittagong.
16	1,855	121	80	88	12	118	30	71	703	1,965	1,927	3,892	1,852	1,879	3,731	25	Noakhali.
5	1,879	316	100	72	61	117	48	120	1,734	2,879	2,926	5,805	3,295	3,159	6,454	26	Tippera.
under registration.																27	Chittagong Hill Tracts
181	30,075	1,879	1,802	4,374	1,121	2,138	896	1,582	16,652	52,310	49,342	101,652	..	..	..		
314	27,887	1,954	1,958	3,081	1,116	1,872	937	1,456	16,142	49,241	46,715	95,956	..	..	..		
−133	+2,188	−75	−156	+1293	+5	+266	−41	+126	+510	+3,069	+2,627	+5,696	..	..	..		

Public Health by the District Health Officers. Taken as a whole, the statement possesses a relative value, although the figures for those of the respective districts as ordered in Government of Bengal, Municipal Department, letter No. 118 San., dated the 8th February 1918 Government of India, Education Department letter No. 93, dated the 26th March 1918.

A. C. CHATTERJI, M.B., D.P.H., MAJOR, I.M.S.,
Director of Public Health, Bengal.

Statement of weekly gauge readings on the river Ganges at Rampur Boalia for the week ending the 12th September 1936.

Date.	Hour.	Height of surface above P. W. D. datum.	Height of surface above P. W. D. datum on the same date last year.	Remarks.
1936.				Value of B. M. on Rajshahi College step; = 64·73 P. W. D.
6th September ..	7 a.m.	60·10	54·90	Zero of gauge = 0·00 P. W. D.
7th „	7 „	60·25	54·75	
8th „	7 „	60·35	54·90	
9th „	7 „	60·45	55·20	
10th „	7 „	60·55	55·65	
11th „	7 „	60·65	56·25	
12th „	7 „	60·80	56·60	

Highest recorded level on 26-8-1879 = 64·24.
Lowest recorded level on 24-4-1931 = 32·05.

S. GUPTA, *Subdivisional Officer,*
Irrigation Department, Rajshahi.

Rampur Boalia, the 12th September 1936.

BOARD OF REVENUE, BENGAL.

NOTIFICATION—No. 15268 Misc.

Calcutta, the 19th September 1936.

The price-lists of staple food-crops in the local areas of Bengal, prepared under section 39 of the Bengal Tenancy Act, 1885 (VIII of 1885), for the period from 1st April to 30th June 1936 having been approved by the Board of Revenue, Bengal, are published for general information.

By order of the Board of Revenue, Bengal,

S. BANERJEE, *Secretary.*

Price-list (retail) of Staple Food-Crops in the local areas of Bengal, prepared under section 39 of the Bengal Tenancy Act (VIII of 1885), for three months from April to June 1936.

BURDWAN DIVISION.

Local areas.	Marts at which prices were taken.	Staple food-crop or crops.	Market days for the preparation of price-lists.	Quantities per rupee in seers of 80 tolas, Company's weight.			Average price for the quarter ending 30th June 1936.
				April.	May.	June.	
BURDWAN.				S. c.	S. c.	S. c.	S. c.
Subdivision—							
Sadar ..	Burdwan Nutunganj.	Rice ..	Last day of every month ..	9 0	8 8	8 8	8 14
Asansol ..	Raniganj ..	Do. ..	27th of every month ..	9 8	9 8	9 8	9 8
Katwa ..	Katwa ..	Do. ..	Ditto	9 0	9 0	9 0	9 0
Kalna ..	Kalna ..	Do. ..	28th of every month ..	8 8	8 8	8 8	8 8
BIRBHUM.							
Sadar ..	Suri ..	Do. ..	Last day of every month ..	10 8	10 0	10 0	10 3
Rampur Hât	Rampur Hât	Do. ..	Last Monday or Friday of every month.	10 0	10 0	10 8	10 3
BANKURA.							
Sadar ..	Bankura ..	Do. ..	Last day of every month ..	10 0	10 0	10 0	10 0
Vishnupur ..	Vishnupur ..	Do. ..	Ditto	10 0	9 8	9 0	9 8
MIDNAPORE.							
Sadar ..	Colonelgola and School Bazar, town Midnapore.	Do. ..	Ditto	12 6	11 0	11 0	11 7
Jhargram ..	Jhargram ..	Do. ..	First Sunday of each month ..	10 0	10 0	9 0	9 14
Ghatal ..	Ghatal Municipal Market.	Do. ..	27th of every month ..	11 8	11 0	11 6	11 5
Tamluk ..	Tamluk Bazar	Do. ..	Ditto	9 8	9 8	9 0	9 5
Contai ..	Kantanala Bazar, town Contai.	Do. ..	Last market day, *i.e.*, last Sunday or Thursday, whichever is nearer to the last day of every month.	10 0	8 0	8 0	8 14
HOOGHLY.							
Sadar ..	Hooghly ..	Do. ..	Last Thursday of every month	9 8	11 6	9 10	10 3
Serampore ..	Serampore ..	Do. .	First or last Saturday of every month.	9 8	9 8	9 4	9 7
Arambagh ..	Arambagh ..	Do. ..	Ditto	10 8	10 0	9 8	10 0
HOWRAH.							
Sadar ..	Ramkristopur	Do. ..	Last day of every month ..	9 8	10 0	10 0	9 13
Uluberia ..	Uluberia ..	Do. ..	Last Saturday of every month	10 0	10 0	9 8	9 13

PRESIDENCY DIVISION.

24-PARGANAS.				S. c.	S. c.	S. c.	S. c.
Subdivision—							
Sadar ..	Chetla Hât ..	Rice ..	Last Wednesday of every month	11 1	10 12	11 0	11 0
Barasat and Barrackpore.	Barasat ..	Do. ..	Last market day which immediately precedes the last Saturday of every month.	9 12	9 0	9 0	9 4
Diamond Harbour.	Magrahât ..	Do. ..	Ditto	10 8	9 9	10 0	10 0
Basirhat ..	Baduria ..	Do. ..	Second Tuesday of every month	10 7	9 10	9 10	9 14

PRESIDENCY DIVISION—*concluded.*

Local areas.	Marts at which prices were taken.	Staple food-crop or crops.	Market days for the preparation of price-lists	Quantities per rupee in seers of 80 tolas, Company's weight.			Average price for the quarter ending the 30th June 1936.
				April.	May.	June.	
NADIA.				S. c.	S. c.	S. c.	S. c.
Subdivision—							
Sadar ..	Gouri ..	Rice ..	Last day of every month ..	8 14	8 0	8 0	8 5
Ranaghat ..	Ranaghat ..	Do. ..	28th of every month ..	10 0	9 12	9 8	9 12
Meherpur ..	Meherpur Kalibazar.	Do. ..	Last Monday of every month	11 8	10 12	10 12	11 0
Chuadanga ..	Chuadanga ..	Do. ..	Saturday immediately preceding the 28th of every month.	10 0	13 5	13 4	12 3
Kushtia ..	Bahadurkhali	Do. ..	28th of every month ..	11 6	11 6	10 0	10 15
MURSHIDABAD.							
Sadar ..	Berhampore Khagra.	Do. ..	Ditto	11 0	9 8	9 8	10 0
Lalbagh ..	Jiaganj ..	Do. ..	First Monday of every month..	10 0	10 8	10 8	10 5
Kandi ..	Kandi ..	Do. ..	The last market day before the 28th of every month.	10 12	10 9	9 8	10 4
Jangipur ..	Raghunathganj	Do. ..	Ditto	9 8	10 0	10 0	9 13
JESSORE.							
Sadar ..	Jessore ..	Do. ..	Monday or Friday falling on or next before the last day of every month.	12 8	12 8	12 0	12 5
Narail ..	Rupganj ..	Do ..	Sunday or Thursday falling on or next before the 28th of every month, except February, in which the Monday or Friday falling on or next before the 26th.	12 0	12 8	12 8	12 5
Magura ..	Magura ..	Do. ..	Thursday or Sunday falling on or next before the 28th of every month, except February, in which the Thursday falling on or next before the 26th.	13 0	12 8	12 8	12 11
Jhenida ..	Jhenida ..	Do. ..	Ditto	13 0	13 0	13 8	13 3
Bongaon ..	Bongaon	Do. ..	Monday or Friday falling on or next before the 28th of every month, except February, in which the Monday or Friday falling on or next before the 26th.	10 0	10 0	10 0	10 0
KHULNA.							
Sadar ..	Khulna Bazar (*alias* Saheberhât).	Do. ..	Last market day of every month	10 8	9 12	9 8	9 15
Satkhira ..	Satkhira Bazar (*alias* Pranshire).	Do. ..	28th of every month, except February, when the price will be taken on the 26th.	10 10	10 13	10 13	10 12
Bagerhat ..	Bagerhat ..	Do. ..	Sunday falling on or before the 28th of every month, except February, when the price will be taken on the Sunday falling on or before the 26th.	9 8	9 8	8 8	9 3

DACCA DIVISION.

DACCA.				S. c.	S. c.	S. c.	S. c.
Subdivision—							
Narayanganj	Narayanganj Bazar.	Rice ..	Last market day before the 13th of every month.	12 8	12 0	12 0	12 3
Sadar ..	Dacca Town Imamganj Bazar.	Do. ..	Last market day of every month	10 0	9 8	10 0	9 13
Manikganj ..	Dasora Bazar	Do. ..	Market day falling on or immediately before the 28th of every month.	10 8	10 12	10 8	10 9
Munshiganj ..	Mirkadim ..	Do. ..	Last Sunday of every month	11 0	10 12	10 8	10 12

DACCA DIVISION—*concluded.*

Local areas.	Marts at which prices were taken.	Staple food-crop or crops.	Market days for the preparation of price-lists.	Quantities per rupee in seers of 80 tolas, Company's weight.			Average price for the quarter ending 30th June 1936.
				April.	May.	June.	
				S. c.	S. c.	S. c.	S. c.
MYMENSINGH.							
Subdivision—							
Jamalpur ..	Raniganj ..	Rice ..	Last market day of the 3rd week of every month.	12 4	10 8	12 6	11 11
Tangail ..	Kagmari ..	Do. ..	Ditto	11 0	11 0	11 0	11 0
Netrakona ..	Netrakona ..	Do. ..	Ditto	13 0	12 0	12 4	12 7
Sadar ..	Mechuabazar ..	Do. ..	Ditto	11 0	11 0	11 0	11 0
Kishorganj ..	Kishorganj ..	Do. ..	Ditto	10 10	10 10	10 10	10 10
FARIDPUR.							
Sadar ..	Faridpur ..	Do. ..	Last market day of every month	11 12	11 0	11 0	11 4
Madaripur ..	Madaripur ..	Do. ..	On the market day preceding the 28th of every month.	12 0	12 0	11 8	11 13
Goalundo ..	Rajbari ..	Do. ..	Ditto	12 8	12 8	12 8	12 8
Gopalganj ..	Gopalganj ..	Do. ..	Last market day of every month	13 0	11 0	12 0	12 0
BAKARGANJ.							
Patuakhali ..	Patuakhali ..	Do. ..	Last market day preceding the last day of every month.	11 8	12 0	10 0	11 3
Pirojpur ..	Rajganj ..	Do. ..	Ditto	11 0	10 0	9 12	10 4
Sadar ..	Barisal ..	Do. ..	Last day of every month ..	11 2	10 8	10 0	10 9
Dakshin Shahbazpur.	Bhola Hât ..	Do. ..	Last market day preceding the last day of every month.	10 10	10 4	10 0	10 5

CHITTAGONG DIVISION.

TIPPERA.				S. c.	S. c.	S. c.	S. c.
Subdivision—							
Brahmanbaria	Brahmanbaria	Rice ..	Market day immediately preceding the 28th of every month.	11 7	11 0	12 8	11 10
Sadar ..	Rajganja Bazar, Comilla.	Do. ..	Last market day of every month	10 0	10 0	10 0	10 0
Chandpur ..	Chandpur Old Bazar.	Do. ..	Market day immediately preceding the 28th of every month.	11 4	11 4	11 4	11 4
NOAKHALI.							
Sadar ..	Bara Bazar ..	Do. ..	Last market day of every month.	11 0	11 0	10 3	10 12
Feni ..	Feni Bazar ..	Do. ..	Ditto	11 8	11 0	12 0	11 8
CHITTAGONG.							
Sadar ..	Buxir Hât ..	Do. ..	Last Saturday of every month	12 0	11 0	11 0	11 5
Cox's Bazar ..	Cox's Bazar ..	Do. ..	Friday immediately preceding the 26th, or the 26th if that day happens to be a Friday.	12 0	12 0	11 0	11 11

RAJSHAHI DIVISION.

RAJSHAHI.				S. c.	S. c.	S. c.	S. c.
Subdivision—							
Sadar ..	Saheb Bazar ..	Rice ..	Last day of every month ..	10 4	10 0	9 12	10 0
Naogaon ..	Naogaon ..	Do. ..	Ditto	11 8	10 8	10 8	10 13
Nator ..	Nator ..	Do. ..	Ditto	11 4	11 4	10 8	11 0
DINAJPUR.							
Sadar ..	Rail Bazar Hât	Do. ..	Last market day of every month.	10 15	10 8	11 0	10 13
Thakurgaon	Lahirihat ..	Do. ..	....	13 0	13 0	13 0	13 0
Balurghat ..	Balurghat ..	Do. ..	....	12 0	11 8	11 0	11 8
JALPAIGURI.							
Alipur Duars	Alipur Duars ..	Do. ..	....	12 0	11 0	10 0	11 0
Sadar ..	Dinbazar ..	Do. ..	15th of every month ..	12 8	12 8	11 0	12 0

RAJSHAHI DIVISION—*concluded.*

Local areas.	Marts at which prices were taken.	Staple food-crop or crops.	Market days for the preparation of price-lists.	Quantities per rupee in seers of 80 tolas, Company's weight.			Average price for the quarter ending 30th June 1936.
				April.	May.	June.	
				S. c.	S. c.	S. c.	S. c.
RANGPUR.							
Subdivision—							
Sadar ..	Nawabganj Chaliaamad, Rangpur.	Rice ..	Last Wednesday or Saturday, whichever may be close to the last day of every month.	11 13	11 13	11 4	11 10
Nilphamari ..	Sagarmacha ..	Do. ..	Last Wednesday or Sunday, whichever may be close to the 28th of every month.	12 0	12 0	12 0	12 0
Kurigram ..	Kurigram ..	Do. ..	Last Saturday or Tuesday next to the 28th of every month.	13 5	10 0	11 7	11 9
Gaibandha ..	Gaibandha Bazar	Do. ..	27th of every month ..	10 0	10 0	9 0	9 11
BOGRA.							
District of Bogra	Kalitala Hât ..	Do. ..	Last Sunday of every month ..	11 13	11 11	10 9	11 6
PABNA.							
Subdivision—							
Sadar ..	Pabna Bazar ..	Do. ..	15th of every month ..	11 8	11 4	10 8	11 1
Serajganj ..	Fariapati at Serajganj.	Do. ..	Ditto	11 8	11 8	11 4	11 7
MALDA.							
District of Malda	Balia Nawabganj	Do. ..	Second Wednesday of every month.	10 8	10 10	10 13	10 10

DISTRICT REPORTS ON WEATHER AND CROPS.

For the week ending on the 16th September 1936.

Summary.—During the week the rainfall was generally heavy. Transplantation of winter paddy is fast approaching completion. Harvesting of autumn crops is much advanced. Prospects of standing crops are generally satisfactory. During the week ending Saturday, the 12th September, 7,796 and 4,927 persons received gratuitous relief in Nadia and Murshidabad, respectively. In Burdwan, daily average of peasons receiving gratuitous relief was 8,190 during the week ending Saturday, the 12th idem. The average price of common rice for the province has slightly risen as compared with that of the previous week.

Serial No.	District and sub-division.	Rainfall.	Price of common rice, in seers, per rupee.		Character of the weather, condition of crops, etc.
			This week.	Previous week.	
1	2	3	4	5	6
		Inches.			
1	24-Parganas ..	7·89	9½	9⅝	Weather seasonable. Condition of standing crops is favourable. Fodder and water are sufficient. No import or export of paddy except in Basirhat where import of paddy from East Bengal continues. Agricultural loans are still being distributed in Basirhat and Diamond Harbour.
	Diamond Harbour..	7·86	9⅛	9⅛	
	Barrackpore ..	1·25	8½	8½	
	Baraset ..	5·45	9½	9	
	Basirhat ..	5·89	11	11	
2	Nadia ..	2·11	8½	8½	Weather seasonable. Fodder and water are sufficient except in Bheramara and Daulatpur thanas. There is a great rise in the river Bhagirathi, Jalangi and other rivers and khals as a result of that *amon* paddy in good position of police-stations Chapra and Nakashipara has been damaged. No agricultural loan distributed during the week. Gratuitous relief was given to 108 persons in Sadar, 770 persons in Chuadanga and 6,918 persons in Kushtia during the week ending 12th September 1936.
	Kushtia ..	5·95	9½	9½	
	Meherpur ..	2·23	10	10	
	Chuadanga ..	4·68	11	11	
	Ranaghat ..	2·41	9½	9½	
3	Murshidabad ..	5·58	9½	9½	Weather cloudy with heavy showers of rain. Prospects of standing crops on high lands are favourable. Fodder and water are sufficient except in flooded areas where fodder is insufficient. Cattle-disease is reported from Jangipur subdivision. No large import or export. Number of persons receiving gratuitous relief in the distressed areas for the week ending Saturday, the 12th September, was 282, 3,179 and 1,466 in Lalbagh, Kandi and Jangipur subdivisions, respectively. The flood is again rising slowly and relief is being given to the flood-stricken people of almost all thanas of Sadar subdivision.
	Lalbagh ..	5·94	10	10	
	Jangipur ..	9·41	10	10	
	Kandi ..	5·66	10	10½	
4	Jessore ..	4·55	10	11½	Weather seasonable. Prospects of standing crops are fair. No large export or import. Fodder and water are sufficient. Cattle-disease is reported from Gaighata police-station.
	Jhenidah ..	10·64	12	12	
	Magura ..	(*n*)	(*n*)	13	
	Narail ..	4·30	11	11	
	Bongaon ..	5·79	10	10	
5	Khulna ..	5·05	10	10	Weather seasonable. Fodder and water are sufficient. Test relief works suspended.
	Satkhira ..	(*n*)	(*n*)	10½	
	Bagerhat ..	1·15	8	8½	

(*n*) Not reported.

Serial No.	District and sub-division.	Rainfall.	Price of common rice, in seers, per rupee.		Character of the weather, condition of crops, etc.
			This week.	Previous week.	
1	2	3	4	5	6
		Inches.			
6	Burdwan ..	4·97	9	9	Weather seasonable. Condition of crop is favourable. Fodder is sufficient. 8,190 persons daily on average received gratuitous relief during the week ending 12th September 1936.
	Asansol ..	2·82	11	11	
	Katwa ..	2·65	9½	9½	
	Kalna ..	3·62	8½	8½	
7	Birbhum ..	10·60	10	10	Weather seasonable and cloudy. Prospects of standing crops are good. Fodder and water are sufficient.
	Rampurhat ..	10·88	10½	10½	
8	Bankura ..	3·27	10½	10	Weather seasonable. Harvesting of *aus tatko* and *bhutmuri* paddy has commenced. Slight damage done to paddy in Khatra Circle by "*Bhepu*". Prospects of standing crops are good. Fodder and water are sufficient.
	Vishnupur .	1·96	10	10	
9	Midnapore ..	3·73	10½	10½	Condition of standing crops is fair. Jute is being cut. Fodder and water are sufficient.
	Contai ..	6·07	10	10	
	Tamluk ..	1·70	8½	8½	
	Ghatal ..	2·55	10½	11½	
	Jhargram ..	3·46	10½	10½	
10	Hooghly ..	7·09	9	9	Weather seasonable. Fodder and water are sufficient. Harvesting of jute and *aus* paddy continues.
	Serampore ..	1·94	9½	9½	
	Arambagh ..	2·25	10	9½	
11	Howrah ..	5·31	10	10	The effects of weather are good. Fodder and water are sufficient. Harvesting of jute continues.
	Uluberia ..	4·57	10	9½	
12	Rajshahi (Rampur Boalia).	3·65	10	9½	Weather seasonable. Prospect of standing crops is good. Transplantation of paddy is almost completed. Fodder and water are sufficient.
	Naogaon ..	7·03	10½	10½	
	Nator ..	4·69	9½	9½	
13	Dinajpur ..	6·39	10	10	Weather seasonable. Fodder and water are sufficient. Cattle-disease is reported from Birganj and Pirganj thanas.
	Thakurgaon ..	8·52	9	9	
	Balurghat ..	12·93	11	10	
14	Jalpaiguri ..	10·75	11	11	Weather not seasonable. Condition and prospects of standing crops are favourable. Fodder and water are sufficient.
	Alipur ..	10·46	9	9	

Serial No.	District and sub-division.	Rainfall.	Price of common rice, in seers, per rupee.		Character of the weather, condition of crops, etc.
			This week.	Previous week.	
1	2	3	4	5	6
		Inches.			
15	Darjeeling ..	18·48	8	8	Weather reasonable. Sowing of buck wheat is in progress. Harvesting of maize continues. Stock of rice sufficient and its export or import small. No damage. Fodder and water are sufficient. Cattle-disease exists in Kalimpong and Siliguri subdivision.
	Kurseong ..	11·74	8	8	
	Siliguri ..	12·18	9½	10	
	Kalimpong ..	2·58	7	7	
16	Rangpur ..	6·88	10½	10½	Weather rainy. Prospects of standing crops are fair. No large export or import. Fodder and water are sufficient.
	Nilphamari ..	9·11	10	10½	
	Kurigram ..	6·96	9	9½	
	Gaibandha ..	5·08	9	9	
17	Bogra ..	6·16	10⅞	10½	Agricultural operation continues and growth of standing crops not affected by weather condition. Harvesting of jute continue. Fodder and water are sufficient.
18	Pabna ..	3·77	9½	10	Weather seasonable. Sky cloudy. Its effects on standing crops are good. Harvesting of jute still continues. Fodder and water are sufficient.
	Serajganj ..	4·95	11½	11½	
19	Malda ..	10·11	11	10½	Weather cloudy and rainy. Prospects of standing crops are fair. Fodder and water are available. Cattle disease is reported from Nawabganj police-station.
20	Cooch Behar ..	8·72	11 1/12	12 5/16	Weather seasonable. Preparation of lands for winter paddy and transplantation of seedlings are almost finished. Preparation of lands for rearing tobacco seedlings is in progress. Cutting, steeping and washing of jute continuing. Prospects and condition of standing crops fair. Fodder and water sufficient. Cattle-disease is reported from Dinhatta, Tufanganj and Sadar subdivisions.
21	Dacca ..	3·27	11	11	Rainfall at North Sadar (Kapasia) 4·70. Weather seasonable and its effects on the agricultural operations are good. No large export and import. Prospects of standing crops are good. Fodder and water are sufficient. Cattle-disease reported from Narayanganj and Munshiganj subdivisions.
	Manikganj ..	7·72	10½	10¾	
	Narayanganj ..	3·21	12	12	
	Munshiganj ..	2·83	9½	(n)	

(n) Not reported.

Serial No.	District and sub-division	Rainfall.	Price of common rice, in seers, per rupee.		Character of the weather, condition of crops, etc.
			This week.	Previous week.	
1	2	3	4	5	6
		Inches.			
22	Mymensingh	10 56	10	10	Weather seasonable. Condition of crops is fair. Transplantation of winter paddy is complete Fodder and water are available.
	Jamalpur	6 41	10½	10½	
	Tangail	6 78	10	10	
	Netrakona	10·66	12½	12	
	Kishorganj	7·68	10⅝	10 11/16	
23	Faridpur	8 42	11	11	Condition of standing crops is fair. Fodder and water are sufficient.
	Goalundo (Rajbari)	10 63	11	11	
	Madaripur	4 91	11½	11½	
	Gopalganj (a)	3 23	10½	10½	
24	Bakarganj (Barisal)	5 08	10	10	Weather seasonable. Prospects of standing crops are fair in Pirojpur, Patuakhali and Bhola and good in Sadar. Fodder and water are sufficient Cattle-disease exists in places
	Pirojpur ..	5·10	10⅜	10½	
	Patuakhali	19 73	10½	10½	
	Dakshin Shahazpur (Bhola).	4·82	10	10	
25	Chittagong	5·70	10 11*	10 11*	Weather seasonable. Condition of standing *aman* crop is fair Cattle disease persists at Rangunia Fodder and water are sufficient. Panga salt sells at 14 seers at Sadar and 13 seers at Cox's Bazar
	Cox's Bazar	16 03	11	11	
26	Tippera (Comilla)	2 77	10	10	Weather fair.
	Brahmanbaria	2 58	10½	10½	
	Chandpur	3·60	10½	11½	
27	Noakhali	1·70	10	10	Heavy rainfall has obstructed transplantation of *aman* seedlings Fodder and water are sufficient Cattle-disease is reported from Feni and Sonagazi police stations.
	Feni	8 43	10	10½	
28	Chittagong Hill Tracts.	3·69	13	13	Weather seasonable Its effects are fair. Prospects of standing crops are favourable. Fodder and water are sufficient. Cattle-disease is still prevailing
29	Tripura State	3·78	13½	13½	Weather seasonable. Fodder and water are sufficient. Cattle-disease exists in Belonia and Sabroom Divisions Cotton sells at Rs. 9 to Rs 12 and jute at Rs 3 to Rs 5 per maund.

(a) The rainfall at Haridaspur, which is very near to Gopalganj, is shown here.

* Burma rice.

S. ABDULLAH, for *Director of Agriculture, Bengal.*

Dacca, the 21st September 1936.

Statement showing the gauge readings at Dacca Waterworks Station on the river Buriganga for the week ending 12th September 1936.

Date.	At highest water.		At lowest water.		Commencement of—		Remarks.	
	Time.	Reading.	Time.	Reading.	Ebb tide.	Flow tide.	7 a.m.	5 p.m.
1936.								
6th September ..	Tide is not perceptible.						18·55	18·55
7th „ ..							18·55	18·5
8th „ ..							18·5	18·4
9th „ ..							18·3	18·25
10th „ ..							18·2	18·2
11th „ ..							18·2	18·2
12th „ ..							18·2	18·2

Notable high and low water-levels of previous years.

		Taken at high tide.			Taken at low tide.
27th August	1906 ..	70·5	23rd February	1907 ..	51·06
5th September	1909 ..	66·86	13th „	1908 ..	51·06
10th August	1910 ..	69·86	12th March	1912 ..	51·06
1st „	1911 ..	68·46	6th „	1914 ..	50·60
13th „	1912 ..	67·16	22nd February	1915 ..	50·30
31st „	1915 ..	69·7	15th „	1916 ..	50·60
8th „	1916 ..	68·1	3rd March	1917 ..	51·0
12th „	1917 ..	67·1	21st February	1918 ..	51·40
13th „	1918 ..	69·12	26th „	1919 ..	50·4
2nd „	1919 ..	66·8	18th „	1920 ..	50·9
8th September	1920 ..	66·9	19th „	1921 ..	50·9
28th July	1921 ..	68·4	8th March	1922 ..	51·05
10th August	1922 ..	68·00	14th „	1923 ..	50·8
31st July	1923 ..	66·15	16th February	1924 ..	50·50
29th August	1924 ..	68·82	5th March	1925 ..	50·9
8th September	1925 ..	68·52	9th February	1926 ..	2·2
15th August	1926 ..	19·6	27th „	1927 ..	2·10
17th September	1927 ..	18·70	16th „	1928 ..	2·2
22nd August	1928 ..	20·0	21st „	1929 ..	2·0
13th July	1929 ..	17·8	24th „	1930 ..	2·3
12th September	1930 ..	18·65	28th „	1931 ..	2·2
16th August	1931 ..	21·7	18th „	1932 ..	1·8
6th September	1932 ..	18·5	6th „	1933 ..	2·10
7th „	1933 ..	17·80	26th March	1934 ..	2·40
23rd August	1934 ..	19·35	15th February	1935 ..	1·70
1st September	1935 ..	19·80			

N.B.—Zero of the gauge at Dacca Waterworks prior to 11 a.m. on the 8th January 1926= 8·51 with reference to P. W. D. datum.

Zero of the gauge at Dacca Waterworks since 11 a.m. of the 8th January 1926=0·00 with reference to P. W. D. datum.

M. K. BHATTACHARJEE, *Executive Engineer, Khulna Division.*

Khulna, the 19th September 1936.

IRRIGATION DEPARTMENT, BENGAL.

Irrigation operations for the official year 1936-37.

Area leased for irrigation up to end of July 1936.

Circle.	District.	Canal	Estimated full discharge.	Average discharge in month.	Discharge utilised.	Approximate area of land irrigated during the year up to the end of the month.	Approximate area of land under irrigation up to the same date last year.	Details of areas leased.						Rainfall, 1936-37.		Rainfall, 1935-36.	
								Long-term leases.	Season leases								
									Kharif.	Rabi.	Sugarcane.	Single watering.	Total.	Grand Total.	During month.	Up to end of month.	During month.	Up to end of month.
			Cusecs	Cusecs	Cusecs	Acres.	Acres.	Acres.	Acres.	Acres.	Acres.	Acres.	Acres.	Acres.	Inches.	Inches.	Inches.	Inches.
South-Western.	Midnapore ..	Midnapore	1,411	140	77	2,703	4,494	5,650	25,830	..	..	..	25,830	31,480	13·23	38·47	14·61	26·25
		Panskura	522	2	..	..	398	2,208	3,054	..	..	..	3,054	5,322	12·86	40·46	5·70	19·07
	Howrah ..	Tidal Reaches, Ranges I and II	..	..	..	..	..	..	..	..	..	..	..	..	15·06	56·14	9·88	23·53
		Total Midnapore Canal ..	..	..	..	2,703	4,892	7,918	28 884	..	..	..	28 884	36,802	..	..	..	..
		Total of the corresponding period last year ..	..	..	..	..	..	5,631	152	..	..	..	152	5,783	..	..	..	..
	Burdwan and Hooghly.	Damodar Canal proper ..	1,600	724	581	(a) 135,975	49,386	19,265	(b) 117,085	..	..	..	117,085	136,350	20·17	38·38	6 30	16·67
		Eden Canal proper ..	400	246	246	2,850	3,635	5,725	7,156(c)	..	..	..	7,156	12,881	13·65	35·71	11·23	24·35
		Total Damodar Canal ..	..	..	..	138,825	53,021	24,990	124,241	..	..	..	124,241	149,231	.	..	..	..
		Total of the corresponding period last year ..	..	..	..	..	53,021	..	6,259(d)	.	..	..	6,259	6,259	..	..	..	..
	Birbhum ..	Bakreswar Canal ..	129	57	57	5,800	1,857	.	5,850	..	..	..	5,850	5,850	14·54	26·60	5·25	12·39
		Total of the corresponding period last year ..	..	.	..	1,857	7,333	..	..	..	..	..	..	..	..	..	..	..
		GRAND TOTAL ..	..	..	..	147,328	59,770	32,908	158,975	..	..	..	158,975	191,883	..	..	..	..
		GRAND TOTAL OF THE CORRESPONDING PERIOD LAST YEAR ..	..	..	..	..	..	5,631	6,411	..	..	..	6,411	12,042	..	..	..	..

(a) (i) Under the Bengal Development Act XVI of 1935 .. 117 085 acres
(ii) Under long lease .. .. .. 18,890 ,,

(b) Area irrigated under Bengal Development Act XVI of 1935

(c) Including 75 for hot weather.

(d) Including 3 for hot weather.

	Approximate area of land irrigated during the year up to the end of the month
	Acres
Saibund Canal	1,292

J. F. RUSSELL,
Personal Assistant to the Chief Engineer to the Government of Bengal.

Calcutta, the 11th September 1936.

Vital statistics of towns with a population of 50,000 and over of the Bengal Presidency for the week ending Saturday, the 12th September 1936.

Districts.	Nos.	Towns.	Population under registration according to census of 1931.			Births registered.		Deaths registered																						
			Male.	Female.	Total.	Number registered (excluding still births).	Still-births registered.	Cholera.	Small-pox.	Plague.	Cerebro-spinal meningitis.	Malaria.	Enteric fever.	Measles.	Relapsing fever. (Spirochætal).	Kala-azar	Influenza.	Other fevers.	Dysentery.	Diarrhœa.	Pneumonia.	Pulmonary tuberculosis.	Other respiratory diseases.	Injuries including suicide.	Deaths from child-birth.	Other causes.	Total of all causes.			Total of corresponding week of the previous year.		
																										Male.	Female.	Total.	Male.	Female.	Total.
Calcutta	1	Calcutta ..	778,817	362,045	1,149,862	629	119	4	1	..	5	6	36	1	..	2	5	20	16	5	67	57	37	16	3	281	301	261	562	286	226	512
Burdwan ..	2	Asansol Mining Settlement.	209,544	173,136	382,680	265	..	3	1	..	..	3	2	..	..	..	..	72	6	..	15	..	11	6	1	54	85	89	174	86	90	176
Howrah ..	3	Howrah ..	145,120	79,753	224,873	137	14	2	..	..	..	3	4	..	..	..	..	2	6	5	5	8	23	2	..	44	55	49	104	60	65	125
Dacca ..	4	Dacca ..	79,365	59,153	138,518	104	3	1	..	..	..	..	3	..	..	4	..	..	8	1	11	..	15	3	..	26	38	34	72	44	29	73
24-Parganas	5	Bhatpara ..	69,154	24,841	84,975	29	2	..	..	..	..	..	1	..	..	..	..	10	3	..	..	1	..	..	1	5	12	9	21	7	16	23
	6	Garden Reach	36,131	19,741	55,872	20	3	..	..	..	..	..	..	..	..	..	..	4	2	..	..	2	1	..	..	5	9	5	14	6	4	10
Chittagong ..	7	Chittagong	35,949	18,107	53,156	40	1	2	..	..	..	..	..	..	..	..	..	4	..	..	..	..	..	1	..	10	8	9	17	6	10	16

Calcutta, the 19th September 1936.

S. N. SUR, M.B., D.P.H., D.T.M., *Director of Public Health, Bengal (offg.).*

Resolution on the Reports of the Sanitary Board and of the Chief Engineer, Public Health Department, Bengal, for the year 1935.

GOVERNMENT OF BENGAL.

Local Self-Government Department.

Public Health.

CALCUTTA, the 18th SEPTEMBER 1936.

RESOLUTION—No. 3647P.H.

Minister-in-charge: The Hon'ble Sir Bijoy Prasad Singh Roy, Kt.

Read the Reports of the Sanitary Board and of the Chief Engineer, Public Health Department, Bengal, for the year 1935.

As in the previous year, the municipalities continued their policy of financing their schemes by means of loans and contributions raised locally and considerable progress was made during the year in the negotiation of new water-supply and drainage schemes.

Sketch projects for schemes estimated to cost Rs. 28,33,230, detailed projects for Rs. 7,93,765 and detailed estimates and plans for miscellaneous works amounting to Rs. 1,65,867 were prepared during the year.

The stoppage of Government grants towards the execution of water-supply, drainage and other sanitary engineering schemes which was necessitated by the adverse financial position was not, however, without its effect on the number of such schemes undertaken during the year.

The capital expenditure on waterworks was Rs. 2,13,789 in 1935 and on sewerage works Rs. 1,17,273 against Rs. 2,72,893 and Rs. 2,26,339 respectively in 1934. This brings the total amount of capital expenditure till the end of the year up to Rs. 1,67,21,186 on waterworks and Rs. 88,39,149 on sewerage works.

2. The department continued to render valuable assistance to the municipalities in the matter of inspection, advice and supervision.

3. The metering of house connections which was enforced in the two municipal towns of Comilla and North Chandpur strikingly demonstrated the need for continued vigilance on the part of the municipalities for the prevention of waste in the supply of water to the householders. Although the new Bengal Municipal Act gives power to the municipalities to enforce metering at the cost of the householders even in the case of old house connections, there is a general reluctance to enforce metering as a means of checking waste of water. Even where connections are metered excess water charges are not promptly realized, with the result that there is often considerable waste of public funds. The Chief Engineer reports, however, that the "decentralised storage" system of distribution, to which reference was made in last year's resolution, has proved a success in the municipalities of Asansol, Jalpaiguri and English Bazar where it was introduced as a method of checking waste of water, and it is proposed to introduce this system of distribution in all new schemes of water-supply. The Dacca Municipality has decided to reorganise a part of its supply area on the decentralised storage system, and the sketch project of water-supply for the new Garden Reach Municipality has been designed on this system.

4. The Sanitary Board met seven times in the year. The Board examined the various schemes before their submission to Government, and generally reviewed the reports of inspection of the departmental officers, suggesting necessary action. Their advice was of particular value in regard to measures for the control of malaria and other mosquito-borne diseases.

5. The Board formed a tuberculosis sub-committee with the Surgeon-General as Chairman, the Director of Public Health as Secretary and Dr. (Mrs.) Mary H. Y. Remfry, as member.

6. The Government of Bengal desire to convey their thanks to the members of the Board for the valuable advice given by them during the year of review.

They also desire to express their appreciation of the services rendered during the year by the officers of the department, and of the ability with which Mr. F. C. Griffin carried out his duties as Chief Engineer.

By order of the Govt. of Bengal

(Ministry of Public Health),

G. S. DUTT,
Secy. to the Govt. of Bengal.

Printed and published by the Superintendent, Government Printing, Bengal Government Press, Alipore, Bengal, on the 24th September 1936.